Driver & Vehicle Standards Agency

Motorcycle Single Vehicle Approval (MSVA) Inspection Manual

November 2026

Keeping **Britain** moving, **safely** and **sustainably**

Driver and Vehicle Standards Agency ©Crown copyright 2026.

You may re-use this information (not including logos) free of charge in any format or medium, under the terms of the Open Government Licence.

To view this licence, visit https://www.nationalarchives.gov.uk/doc/open-government-licence/version/3/w or write to the Information Policy Team, The National Archives, Kew, London TW9 4DU, or email: psi@nationalarchives.gsi.gov.uk

Any enquiries regarding this publication should be sent to us at enquiries@dvsa.gov.uk

This document is also available from the DVSA section of GOV.UK website at www.gov.uk/vehicleapproval.

Contents

Contents

Version Control & Release Notes

Foreword

01 Stands

02 Mirrors – Unbodied Vehicles

03 Mirrors – Bodied vehicles

03 Annex – Mirror Field of View (Compact Layout)

04 Speedometer

05 Audible Warning

06 Lighting

06 Annex 1- Lighting requirements for 2 Wheel Mopeds & Low Powered Mopeds

06 Annex 2- Lighting requirements for 3 Wheel Mopeds & Light Quadricycles

06 Annex 3 – Lighting requirements for Solo Motorcycles

06 Annex 4 – Lighting requirements for Motorcycles with Sidecar

06 Annex 5 – Lighting requirements for Motorcycle Tricycles

06 Annex 6 – Lighting requirements for Tricycles (other than Motorcycle) and Heavy Quadricycles

06 Annex 7 – Acceptable multi-lamp options for 3 & 4 wheeled vehicles not requiring two obligatory headlamps

07 Unauthorised Use

08 External Projections – Unbodied Vehicles

09 External Projections – Bodied Vehicles

10 Rear Registration Plate Space

11 Handholds

12 Headlamp Pattern – Unbodied Vehicles
13 Headlamp Aim – Bodied Vehicles
14 Design and Construction
15 Tyres
15 Annex 1 - Tyre Load Indices
15 Annex 2 – Speed Categories
16 Brakes
17 Radio Suppression
18 Exhaust System / Noise
19 Exhaust Emissions – Spark Ignition
20 Exhaust Emissions – Diesel
21 Brake Performance
21 Annex - Efficiency Calculations
22 Goods Vehicle Identification Plate
23 Power Restriction Information Plate
24 Defrost/Demist
25 Seat Belts and Anchorages
25 Annex 1- Seat Belt Anchorage Strength Assessment
25 Annex 2- Seat Belt Upper Anchorage Location
26 Glazing
26 Annex – Determining a Windscreen
27 Windscreen Wipers and Washers
28 Masses and Dimensions
29 Glossary of Terms

Contents

Version Control & Release Notes

Section	Title	Revision Date	Revision No
Foreword		06/11/2026	7
Section 01	Stands	15/04/2025	4
Section 02	Mirrors – Unbodied Vehicles	15/04/2025	5
Section 03	Mirrors – Bodied Vehicles	15/04/2025	4
	Annex 1 – Mirror Field of View layout and methodology (Compact)	January 2019	2
Section 04	Speedometer	15/04/2025	5
Section 05	Audible Warning	15/04/2025	3
Section 06	Lighting	15/04/2025	4
	Annex 1 – Lighting requirements for 2 Wheel Mopeds & LPM	15/04/2025	4
	Annex 2 – Lighting requirements for 3 Wheel Mopeds & Light Quadricycles	15/09/2025	4
	Annex 3 – Lighting requirements for Motorcycles	September 2022	3
	Annex 4 – Lighting requirements for Motorcycle with Sidecar	June 2010	2
	Annex 5 – Lighting requirements for Motorcycle Tricycles	15/04/2025	4
	Annex 6 – Lighting requirements for Tricycles (other than Motorcycle derived) and Heavy Quadricycles	06/11/2026	5
	Annex 7 – Acceptable multi-lamp options for vehicles not requiring two obligatory headlamps	August 2007	1
Section 07	Unauthorised use	06/11/2026	5
Section 08	External Projections – Unbodied vehicles	15/09/2025	5
Section 09	External Projections – Bodied Vehicles	15/09/2025	3
Section 10	Rear Registration Plate Space	15/04/2025	4
Section 11	Handholds	15/04/2025	2
Section 12	Headlamp Pattern – Unbodied Vehicles	06/11/2026	4

Section	Title	Revision Date	Revision No
Section 13	Headlamp Aim – Bodied Vehicles	06/11/2026	2
Section 14	Design and Construction	15/04/2025	4
Section 15	Tyres	06/11/2026	7
	Annex 1 – Tyre Load Indices	June 2005	1
	Annex 2 – Speed categories	June 2010	2
Section 16	Brakes	15/04/2025	6
Section 17	Radio Suppression	15/04/2025	2
Section 18	Exhaust System / Noise	15/04/2025	3
Section 19	Exhaust Emissions – Spark Ignition	06/11/2026	3
Section 20	Exhaust Emissions – Diesel	15/04/2025	2
Section 21	Brake Performance	15/04/2025	3
	Annex – Efficiency Calculations	15/04/2025	4
Section 22	Goods Vehicle Identification Plate	15/04/2025	2
Section 23	Power Restriction Information Plate	06/11/2026	6
Section 24	Defrost / Demist	06/11/2026	3
Section 25	Seat Belts and Anchorages	06/11/2026	3
	Annex 1 – Seat Belt Anchorage Strength Assessment	15/04/2025	1
	Annex 2 – Seat Belt Upper Anchorage Location	15/04/2025	1
Section 26	Glazing	06/11/2026	4
	Annex – Determining a Windscreen	15/04/2025	2
Section 27	Windscreen Wipers and Washers	15/04/2025	1
Section 28	Masses and Dimensions	15/04/2025	2
Section 29	Glossary of Terms	06/11/2026	7

Version Control & Release Notes

Release Notes

Version 8

Section	MOI	Required Standards	TSE Incorporated	Details
Foreword	-	-	No	Guidance added on classification of twinned-wheel vehicles within categories L1e (excl. LPM), L2e, L3e, and L5e. Added sidecar positioning requirements for L4e vehicles. Vehicle categories rearranged into designation order. L2e and L6e classification criteria updated. Additional information added to clarify the treatment of EU Certificate of Conformity weight discrepancies (TSE MSVA FWD 001) and acceptable VIN characters. Guidance added on evidence requirements for classification of electrically propelled vehicles and for vehicles relying on speed and/or power restrictions to meet category requirements.
06 Annex 6 – Lighting requirements for Tricycles (other than Motorcycle) and Heavy Quadricycles	-	-	No	Reference to Note added to Obligatory table.
07 Unauthorised Use	N	Y	Yes	RS 3 revised to clarify requirements and new Note 1 referenced from RS 3 (MSVA TSE 007 002).
12 Headlamp Pattern – Unbodied Vehicles	Y	N	No	MoI updated to clarify horizontal aim adjustment requirements for symmetrical ("flat top") dipped beam patterns and horizontal aim exemption for symmetrical beam patterns clarified in new Note 1.
13 Headlamp Aim – Bodied Vehicles	N	Y	No	Headlamp aim tolerance requirements clarified at RS 3.
15 Tyres	Y	N	No	New Note 2 referenced from RS 2 and subsequent notes renumbered. New Note 8 referenced from RS 6.
19 Exhaust Emissions – Spark Ignition	Y	N	Yes	Application, Emissions table and point 3 of MOI revised to include 2-stroke engines (TSE MSVA 019 004).

Section	MOI	Required Standards	TSE Incorporated	Details
23 Power Restriction Information Plate	Y	Y		Section renamed. Application revised to include 250W LPMs. MOI revised to include electrically propelled vehicles and requirements applicable to 250W LPMs. Note 2 revised. RS 4 e) revised. New RS 5. New Note 3 referenced from RS 5.
24 Defrost/Demist	Y	N	No	Application and MoI revised to clarify the vehicles subject to defrosting and demisting requirements and applicable exemptions to certain partially enclosed vehicles.
25 Seat Belts and Anchorages	Y	N	No	Comparable standards table in MoI updated.
26 Glazing	Y	N	No	Correction of I1 ‘Other windows’ required marking to LW.
29 Glossary of Terms	-	-	-	Bodied vehicle (TSE MSVA 029 001) and 250W LPM revised. EAPC added.

Version Control & Release Notes

Version 7.1

Section	MOI	Required Standards	TSE Incorporated	Details
06 Annex 2 – Lighting requirements for 3 Wheel Mopeds & Light Quadricycles	-	-	No	Front fog, Rear fog, Hazard warning, & Reversing lamps added to Optional lamps table.
07 Unauthorised Use	N	Y	Yes	Correction of text and clarification of requirements at RS 1 (TSE MSVA 007 001).
08 External Projections – Unbodied vehicles	N	N	No	Annex 1 - Projection Assessment incorporated into Section and referenced from RS 6 & RS 7.
09 External Projections – Bodied Vehicles	N	N	No	Annex 1 – Determination of ‘Floor Line’ incorporated into Section and referenced from MoI. Illustration revised.
09 Annex – Determination of ‘Floor Line’ & use of the ‘Testing Device’	-	-	-	Section removed and incorporated into Sections 08 and 09.
29 Glossary of Terms	-	-	-	Added 'Twist and Go' EAPCs to 250W LPM definition. Revised description of a Bodied vehicle.

Version 7

Section	MOI	Required Standards	TSE Incorporated	Details
Foreword	-	-	-	Introductory paragraphs revised. Exceptions to MSVA updated to align with scheme application form. Illustrations added to Application.
03 Mirrors – Bodied Vehicles	Y	N	Yes	Clarification of required mirrors in MoI (TSE MSVA 003 003).
05 Audible Warning	N	Y	TBC	RS1 f) amended to clarify applicable type of steering control.
06 Lighting	Y	N	No	Clarification of applicable steering control at Note 2.
06 Annex 1- Lighting requirements for 2 Wheel Mopeds & Low Powered Mopeds	-	-	No	Optional side Reflector height increased. Optional daytime running lamps added to table.
06 Annex 2 Lighting requirements for 3 Wheel Mopeds & Light Quadricycles	-	-	Yes	Add requirements applicable to light quadricycles and unbodied three wheeled mopeds to Front Direction Indicators table (TSE MSVA 006 021). Remove 500mm separation requirements for Dipped beam headlamps (TSE 006 023). Optional daytime running lamps added to table.
06 Annex 5 Lighting requirements for Motorcycle Tricycles	-	-	Yes	Remove 500mm separation requirements for Dipped beam headlamps (TSE 006 023). Optional daytime running lamps added to table.
06 Annex 6 - Lighting requirements for Tricycles (other than Motorcycle) and Heavy Quadricycles	-	-	Yes	Remove 500mm separation requirements for Dipped beam headlamps (TSE 006 023). Optional daytime running lamps added to table.
08 External Projections – Unbodied vehicles	Y	N	No	Added description of testing device.

Version Control & Release Notes

Section	MOI	Required Standards	TSE Incorporated	Details
09 Annex – Determination of 'Floor Line' & Use of the 'testing device'	-	-	No	Added 'use of the testing device' to section.
15 Tyres	Y	Y	Yes	New Note 1 linked to RS 1 added to provide exemption for certain vehicle categories with conditions (TSE MSVA 015 007).
16 Brakes	Y	-	Yes	Requirement for bias-bars added (TSE MSVA 016 007).
21 Brake Performance	Y	N	Yes	Locked wheels paragraph clarified (TSE MSVA 021 003).
21 Annex – Efficiency Calculations	-	-	-	'Amateur built tricycle' added to Vehicle Type in Table. Add Note to minimum requirements table to clarify efficiency requirements for locked wheels (TSE MSVA 021 003).
22 Goods Vehicle Identification Plate	Y	N	Yes	Clarification of evidence required added to MoI (TSE MSVA 022 001).
23 Engine Power Restriction Information Plate	Y	Y	Yes	Section revised. Removal of plate size requirement. Added requirements for character height and engine power in kW (TSE MSVA 023 004).
28 Masses and Dimensions	-	-	No	To align with Regulation (EU) No. 168/2013, weights at Table 2 for 3 wheel moped, light and heavy quadricycles updated. Weight at Table 3 for heavy quadricycle (passenger) updated.
29 Glossary of Terms	-	-	-	Windscreen definition updated.

Version Control & Release Notes

This page intentionally left blank.

Version Control & Release Notes

Foreword

This Manual is a detailed guide on the examination of vehicles submitted to an authorised testing station under the Motorcycle Single Vehicle Approval (MSVA) scheme.

It is produced for examiners who carry out the examinations, and for vehicle presenters and other interested parties who wish to familiarise themselves with the technical requirements and inspection procedures.

This Manual is based on the Regulations in force at the time of issue, but changes in legislation may result in variations to the examination requirements.

Application

The Motorcycle Single Vehicle Approval Scheme applies to:

Mopeds

Low powered moped (L1e)

- a 2, 3 or 4 wheeled moped with pedals
- with auxiliary propulsion not exceeding 1kW
- with a maximum design speed not exceeding 25km/h (16mph)
- includes sub-category **250W LPM** (see **Glossary** for definition)

2 wheeled vehicles (L1e)

- with a maximum design speed of 45km/h (28mph)
- fitted with an internal combustion engine having a cylinder capacity not exceeding 50cc, or
- fitted with an electric motor with a maximum continuous power not exceeding 4kW

Note: Vehicles with 3 or 4 wheels may also be classified as L1e where they are "twinned wheel" vehicles.

3 wheeled vehicles (L2e)

- with a maximum design speed of 45km/h (28mph)
- fitted with a spark ignition internal combustion engine having a cylinder capacity not exceeding 50cc, or a compression ignition engine having a cylinder capacity not exceeding 500cc, in either case having a maximum continuous rated or net power not exceeding 4kW, or fitted with an electric motor having a maximum continuous rated power not exceeding 4kW
- not exceeding 270kg unladen (not including the mass of traction batteries in the case of electric vehicles)
- if designed to carry goods a payload not exceeding 300kg

Note: Vehicles with 4 wheels may also be classified as L2e where they are "twinned wheel" vehicles.

Motorcycles

- **2 wheeled vehicles** (L3e & L4e)
- without sidecar (L3e) or with sidecar (L4e)
- fitted with an engine having a cylinder capacity of more than 50cc if of the internal combustion type and/**or** a maximum design speed of more than 45km/h (28mph)
- two wheeled vehicles, powered by an electric motor, which can exceed 45km/h will be classed as motorcycles

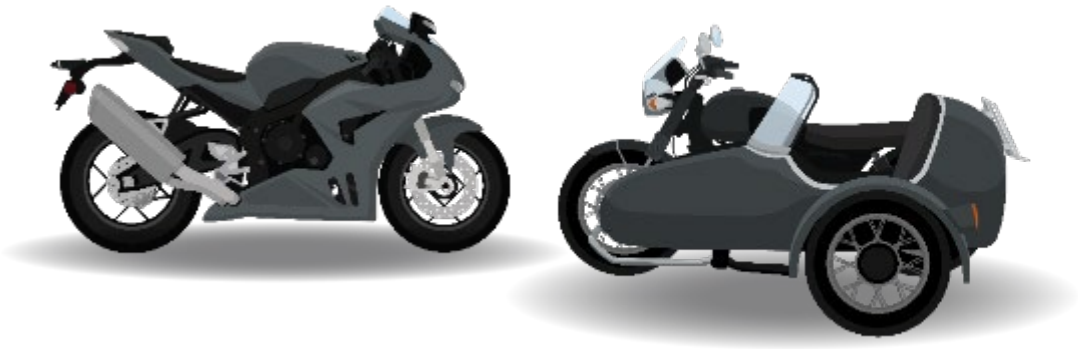

Note: Vehicles with 3 or 4 wheels may also be classified as L3e where they are "twinned wheel" vehicles. L4e vehicles supplied for use on UK roads must have the sidecar fitted to the left of the bike (i.e. next to the kerb).

Motor Tricycles & Motorcycle Tricycles

- **3 wheeled vehicles** (with 3 symmetrically arranged wheels) (L5e)
- fitted with an engine having a cylinder capacity of more than 50cc if of the internal combustion type and/**or** a maximum design speed of more than 45km/h (28mph)
- not exceeding 1000kg unladen
- if designed to carry goods a payload not exceeding 1500kg
- three wheeled vehicles, powered by an electric motor, which can exceed 45km/h will be classed as motor tricycles
- the mass of the traction batteries not being included in the unladen weight

Note: Vehicles with 4 wheels may also be classified as L5e where they are "twinned wheel" vehicles.

4 wheeled vehicles (light quadricycle) (L6e)

- with a maximum design speed of 45km/h (28mph)
- fitted with a spark ignition internal combustion engine having a cylinder capacity not exceeding 50cc, or a compression ignition engine having a cylinder capacity not exceeding 500cc, in either case having a maximum continuous rated or net power not exceeding 4kW, or fitted with an electric motor having a maximum continuous rated power not exceeding 4kW
- not exceeding 425kg unladen (not including the mass of traction batteries in the case of electric vehicles)
- if designed to carry goods a payload not exceeding 200kg

4 wheeled vehicles (heavy quadricycle) (L7e)

- fitted with an engine having a cylinder capacity of more than 50cc if of the internal combustion type, and/**or** a maximum design speed of more than 45 km/h (28mph)
- the maximum net engine power not exceeding 15kW
- not exceeding 450kg unladen (600kg for goods vehicles)
- if designed to carry goods a payload not exceeding 1000kg
- the mass of the traction batteries not being included in the unladen weight

Additional Information

- There may be occasions where vehicles holding an EU Certificate of Conformity have weights that do not align with the limits set out above; such cases will be considered on an individual basis.

- A Vehicle Identification Number (VIN) is a structured combination of characters assigned by the vehicle manufacturer for the purpose of uniquely identifying a vehicle for a period of 30 years. The letters I, O and Q are not permitted within a VIN and must not be used. There must be no spaces between characters, and the VIN must not be altered from the manufacturer's original marking.

Note: Applications submitted with a VIN containing fewer than 9 characters cannot be processed.

Evidence of Vehicle Classification Requirements

For vehicles propelled using electrical means that fall within the scope of Section 23, evidence must be provided at application stage to demonstrate that the vehicle qualifies under the applicable category. Evidence may be in the form of manufacturer documentation, technical specifications, or other information sufficient to demonstrate compliance. The evidence provided must support the vehicle classification and power and/or speed limitation information required by Section 23 of this Manual.

Applicants are reminded that, where applicable, limitation of the vehicle's maximum speed and/or maximum power output should be achieved by means of two or more of the following independent methods:

• Reduction of maximum power output of one or more electric motors based on vehicle or rotation speed sensed internally to the motor.
• Reduction of maximum power output based on actual vehicle speed sensed externally to the motor.
• Physical speed limitation through internal or external components, such as limiting the maximum achievable revolution speed of the electric motor.

Vehicles capable of being adjusted by the user to increase the maximum speed above 25 km/h (15.5 mph) do not meet the requirements for classification as a 250W LPM. Such vehicles should be submitted for approval in the appropriate moped or motorcycle category.

Evidence of Speed and/or Power Requirements

Where vehicles are presented in a category (or sub-category) subject to a maximum speed and/or maximum power requirement, and compliance is achieved through a speed and/or power restriction, the restriction must be declared by the applicant and evidence supporting the declared restricted maximum speed and/or power output must be provided. Any restriction must be permanent in nature.-
Vehicles found not to comply with the applicable restriction, speed, and/or power requirements for the category under which they are presented are subject to refusal under the Design and Construction section of this manual.
Where a rolling road, dynamometer or equivalent test report is submitted as supporting evidence, the report should identify:

- the vehicle tested, including VIN or chassis number;
- the organisation that carried out the test, including name and address;
- the date of the test;
- the equipment, software or methodology used to obtain the result; and
- the recorded maximum power output and/or maximum speed, as applicable.

Obligatory Ministers Approval Certificate

In order to obtain a licence and be registered for the first time in the UK all the classes of vehicle in the section above (unless meeting European Community Whole Vehicle Type Approval) will need to obtain a Ministers Approval Certificate (MAC) except the following:

- Vehicles over ten years old.
- Vehicles with a maximum design speed not exceeding 6 km/h.
- Vehicles intended for pedestrian control.
- Vehicles adapted or constructed to enable use by a person with a disability (i.e. as defined in Section 1 of the Disability Discrimination Act), whether as a driver or passenger.
- Motorcycles intended for use in competitions (**Enduro** and **Trials**) whatever the terrain.
  - **Trial Motorcycles** are defined as having the following characteristics:
    (a) maximum seat height of 700 mm

(b) minimum ground clearance of 280 mm, and
(c) maximum fuel tank capacity of 4 litres.

- **Enduro Motorcycles** are defined as having the following characteristics:
  (a) minimum seat height of 900 mm, and
  (b) minimum ground clearance of 310 mm.

- Agricultural tractors, off-road tractors, agricultural engines, or light agricultural vehicles.
- Vehicles designed primarily for off road leisure use having wheels arranged symmetrically with one wheel at the front of the vehicle and two at the rear.
- Cycles with pedal assistance which are equipped with an auxiliary electric motor having a maximum continuous rated power of 0.25 kW, of which the output is progressively reduced and finally cut off as the vehicle reaches a speed of 25 km/h, or sooner, if the cyclist stops pedalling.
- Any GB registered vehicle which has not been substantially modified, unless directed by the relevant registration authority.

Scope of the Inspection

The design and construction requirements applicable to any particular vehicle are contained in the Motorcycles Etc (Single Vehicle Approval) Regulations 2003 (SI 2003 No. 1959) (the Approval Regulations). The inspection procedures within this manual have been developed to assess, as far as practicable, the ability of the vehicle to comply with the requirements. This manual is not a legal interpretation of the Regulations.
The issue of a Ministers Approval Certificate should not be taken as absolute evidence that the vehicle complies with the Approval Regulations or that the vehicle can legally be used on the road as, for example, the requirements only relate to construction not condition.

Method of Inspection

The examination will be limited to parts of the vehicle which can be readily seen without dismantling; however, the presenter may be required to open lockable compartments and remove engine panels, inspection/access panels, trims, or carpeting, etc., in order to gain access to items subject to examination. Tools/equipment to achieve this cannot be provided by DVSA Examiners.

In some areas of the examination, evidence that the vehicle complies with the relevant criteria may be submitted in the form of documentation. This can, for example, be satisfactory evidence that the vehicle or component (e.g. tyre) meets the requirements of a European Directive, Regulation, or equivalent UN ECE Regulation.

Refusal to Test

The examination of a vehicle may be refused for any of the following reasons

- the vehicle is not submitted for examination at the time and place appointed.
- at the time of the examination the correct fee has not been paid.
- the vehicle cannot be driven or has insufficient fuel or oil to enable the test to be completed.
- the vehicle is presented in a dirty or dangerous condition such as to make it unreasonable for the examination to be carried out.
- a load or items on the vehicle are not secured or removed as requested.
- a proper examination cannot be carried out because any door, tailgate, boot lid, engine cover, fuel cap or other device designed to be readily opened, cannot be opened.
- the condition of the vehicle (in the opinion of the examiner) is such that a proper examination of the vehicle would involve a danger of injury to any person or damage to property.
- the vehicle does not display permanently, in an accessible position and readily legible, the required vehicle identification number by a method such as hammering or stamping, in such a way that it cannot be obliterated or deteriorate.
- the driver does not accompany the machine and operate controls when requested to do so.

Seriously Defective Vehicles

There may be instances where a vehicle is presented for an MSVA examination with a serious defect(s), i.e., where driving or riding the vehicle would involve the risk of injury to any person. If a defect of this nature is found, prohibition action should be taken following the guidance given in part 2 or 3 of the latest edition of the Categorisation of Defects.

Definitions

In this manual, references are made to various vehicle **categories**:

Category A – Mopeds
Category B – Motorcycles with a cylinder capacity not exceeding 125cc and a maximum power output not exceeding 11kW (15bhp)
Category C – Motorcycles with a maximum power output not exceeding 25kW (33.5bhp) and a power/mass ratio not exceeding 0.16kW/kg
Category D – Motorcycles other than those in categories B and C

References are also made to vehicle **classes** which are covered by Schedule 1 of the Regulations:

Amateur built vehicles

A vehicle constructed or assembled for the use of a relevant individual; and

- the construction or assembly or a substantial part of the construction or assembly was carried out by the individual and/or persons acting on his behalf, and
- the individual/other persons acting on his behalf during the period of construction did not carry on a business in which motor vehicles are normally constructed or assembled.

Rebuilt vehicles

A vehicle that

- is a vehicle to which the Secretary of State is required by regulation to assign a vehicle identification number,
- does not fall within the definition of “amateur built” or “vehicle manufactured using the parts of a registered vehicle,” and
- has been rebuilt using a chassis or integral chassis/body which is of the same design and construction as that of the original vehicle that
  - was supplied for the purpose without having been previously used, or
  - previously formed part of a registered vehicle.

Vehicles manufactured using the parts of a registered vehicle

A vehicle that

- is constructed or assembled by a person carrying on a business in the course of which motor vehicles are normally constructed or assembled
- is equipped with an engine which has previously been used as the engine of another vehicle which has been registered under the Vehicle Excise and Registration Act 1994 or any earlier Act relating to the registration of mechanically propelled vehicles, and
- is equipped with one or more of the following components taken from the same vehicle as the engine
  - chassis
  - body
  - suspension
  - a braked axle with more than one wheel
  - transmission
  - steering assembly.

Note: Legal definitions can be obtained from the Motor Cycles Etc. (Single Vehicle Approval) Regulations 2003.

Record of Revision

Revision	Date	Description of change
1	June 2005	Light Quad definition updated.
2	June 2010	Application definitions updated, stamped in VIN added, grammar revisions.
3	August 2014	Removal of time constrained elements, minor text changes.
4	January 2019	Include 250W LPM in vehicle types, add Cat L designations, align Refusal to test with MSVA 12.
5	September 2022	L7e application definition updated.
6	15/04/2025	Introductory paragraphs revised. Exceptions to MSVA updated to align with scheme application form. Illustrations added to Application.
7	06/11/2026	Guidance added on classification of twinned-wheel vehicles within categories L1e (excl. LPM), L2e, L3e, and L5e. Added sidecar positioning requirements for L4e vehicles. Vehicle categories rearranged into designation order. L2e and L6e classification criteria updated. Additional information added to clarify the treatment of EU Certificate of Conformity weight discrepancies (TSE MSVA FWD 001) and acceptable VIN characters. Guidance added on evidence requirements for classification of electrically propelled vehicles and for vehicles relying on speed and/or power restrictions to meet category requirements.

This page intentionally left blank.

01 Stands

Application: All 2 wheeled vehicles.

Method of Inspection	Required Standard
A stand is a device that is firmly attached to the machine and is able to maintain the vehicle in its vertical or near vertical parking position when unattended by its rider. All machines must be fitted with at least one stand of either a prop or centre type or both. If both types are fitted each must be tested. **Note 1:** It may be necessary to assist some stands in returning to the retracted or travelling position. **Note 2:** RS2b, 2c, and 3b do not apply to any vehicle which is designed in such a way that it cannot be propelled by its engine when the stand is extended, i.e., an inhibitor (interlock) is fitted. **Note 3:** RS2b, 2c, 4a and 4b do not apply to a 250W LPM with a mass in running order of less than 35 kg.	**1.** The machine must have at least a prop or centre stand: a) fitted. b) which is secure. c) which has a system that retains the stand in the travelling position (see **Note 1**). **2.** The prop stand must (see **Notes 2** & **3**): a) be able to support the vehicle in such a way as to maintain stability in all steering positions. b) be able to swing back automatically into the retracted or travelling position when the vehicle returns to its normal (vertical) position, or c) be able to swing back automatically into the retracted or travelling position following the first contact with the ground when the vehicle moves forward as a deliberate action of the rider. **3.** The centre stand must (see **Note 2**): a) be able to support the vehicle with either one, or both, or without any wheels in contact with the ground in such a way as to confer stability on the machine when in use.

Method of Inspection	Required Standard
	b) be able to fold backwards automatically to its retracted or travelling position when the vehicle moves forward in such a way as to raise the centre stand from the supporting surface. **4.** Where required, an inhibitor must be (see **Note 3**): a) fitted. b) effective.

Record of Revision

Revision	Date	Brief description of change
1	June 2005	Note added to R&P.
2	June 2010	Clarification added to Application.
3	January 2019	Concession for 250W LPM added.
4	15/04/2025	Section revised.

This page intentionally left blank.

02 Mirrors – Unbodied Vehicles

Application: All unbodied vehicles except 250W LPM. Any mirror(s) fitted to a 250W LPM can be disregarded.

Method of Inspection	Required Standard
Check that the vehicle is fitted with the correct number of obligatory mirrors: **Mopeds including Light Quadricycles** – 1 fitted to the right-hand side of the vehicle. It is permissible for an additional mirror to be fitted to the left-hand side of the vehicle, but if fitted the mirror must meet the requirements of this inspection. **Motorcycles, Tricycles and Heavy Quadricycles** – 1 offside & 1 nearside It is acceptable for mirrors to move with the steering. **Note 1:** This does not apply to Mopeds and Light Quadricycles. **Note 2:** If a mirror has an acceptable “E” or “e” approval mark it can be deemed to have met the requirements of RS2 or RS3 and RS4 (h) and (i) below unless the mirror appears to have been modified. If a mirror is not marked with an acceptable approval mark it may still be acceptable if it meets **all** the requirements below. **Note 3:** RS4(f) does not apply to mirrors incorporated in bodywork, (not to be confused with a body) such as fairings, which are inclined 45° or less from the centre line of the vehicle.	**1.** The vehicle must have: a) the required number of rear-view mirrors fitted. b) the obligatory mirror fitted to the offside in the case of a moped. c) no additional mirrors fitted (see **Note 1**). **2.** The diameter of the reflecting surface of a circular mirror must be (see **Note 2**): a) not less than 94mm. b) not more than 150mm. **3.** Where mirrors are not circular, their reflecting surface must (see **Note 2**): a) be able to contain a 78mm diameter circle. b) be no larger than 120mm x 200mm. **4.** All mirrors: a) must be securely mounted so they remain in a stable position under normal driving conditions, giving a stable view. b) must be positioned that the driver has a clear view of the road to the rear and side(s) of the vehicle.

Method of Inspection	Required Standard
	c) must have a convex reflecting surface. d) must be fitted or set in such a way that the centre of the reflective surface is at least 280mm from the centre line of the vehicle with the handlebars in the “straight ahead” position. e) must be able to be adjusted from the driving position. f) that protrude more than 100mm beyond the vehicle’s extreme outer edge must be capable of being “knocked back” under impact (see **Note 3**). g) must have a knock back pivot that is no more than 50mm from where it is fixed to the bodywork. h) must have the outer edges of the mirror reflecting surface encased in a protective housing (see **Note 2**). i) Edges of the protective housing that are contactable by a 100mm sphere must be radiused to at least 2.5mm. (see **Note 2**).

Record of Revision

Revision	Date	Brief description of change
1	August 2007	R&P quantities clarified
2	June 2010	R&P note added, R&P/RfF re-numbered
3	August 2014	Time constrained element removed from R&P/RfF 3
4	January 2019	Application expanded and corrected.
5	15/04/2025	Section revised.

This page intentionally left blank.

03 Mirrors – Bodied vehicles

Application: This examination applies to all 3 and 4 wheeled bodied vehicles.

Method of Inspection	Required Standard
The required number of mirrors are: • one interior mirror and one offside exterior mirror If the interior mirror cannot meet the field of view requirements then the obligatory mirrors required are: • one nearside exterior mirror and one offside exterior mirror An interior mirror **must** be fitted unless: • it would provide no rearward vision (e.g., obscured by a solid bulkhead) • the vehicle has a central driving position where there is no practical position for the mounting of an interior mirror • the mounting would be in such a position that a normal interior mirror cannot be fitted • if a mirror were fitted it would clearly not meet the field of view requirements. When the vehicle is in the appropriate position on the test area check each obligatory mirror in turn for field of view requirements. (See Annex 1). **Note 1**: RS2 c) does not apply to mirrors incorporated in bodywork, which are inclined 45° or less from the centre line of the vehicle.	**1.** The vehicle must be fitted with the correct number of obligatory mirrors. **2.** Exterior mirror(s): a) must have a reflecting surface that is enclosed in a protective housing. b) that protrude more than 100mm from the vehicle's extreme outer edge and are contactable by a 100mm sphere must have a radius of curvature of not less than 2.5mm. c) that protrude more than 100mm from the vehicles extreme outer edge must be capable of being “knocked back” under impact (see **Note 1**). d) must have a knock back pivot that is no more than 50mm from where it is fixed to the bodywork. e) fitted to the driver’s side must be capable of being adjusted from the driving position unless it can ‘spring back’ into its normal position. **3.** An interior mirror must: a) have a reflecting surface that is a minimum of 40mm x 80mm. b) be capable of being adjusted from the driving position.

Method of Inspection	Required Standard
Note 2: For **exterior mirrors** it is permitted for the required field of view to be obstructed by bodywork, door handles, wheel arches or similar items up to 10%.	c) be fitted with a protective housing so that no exposed glass edges are contactable. **4.** Mirrors must not be mounted in such a manner that it is likely to vibrate and give a distorted view. **5.** All obligatory mirrors must meet the field of view requirements (see Annex & **Note 2**).

Record of Revision

Revision	Date	Brief description of change
1	June 2005	Interior mirror note amended
2	June 2010	Minor grammatical changes
3	January 2019	RfF 1. E) corrected to align with R&P.
4	15/04/2025	Section revised. Clarification of required mirrors in MoI (TSE MSVA 003 003).

This page left intentionally blank.

03 Annex – Mirror Field of View (Compact Layout)

Figure 1: Floor Markings

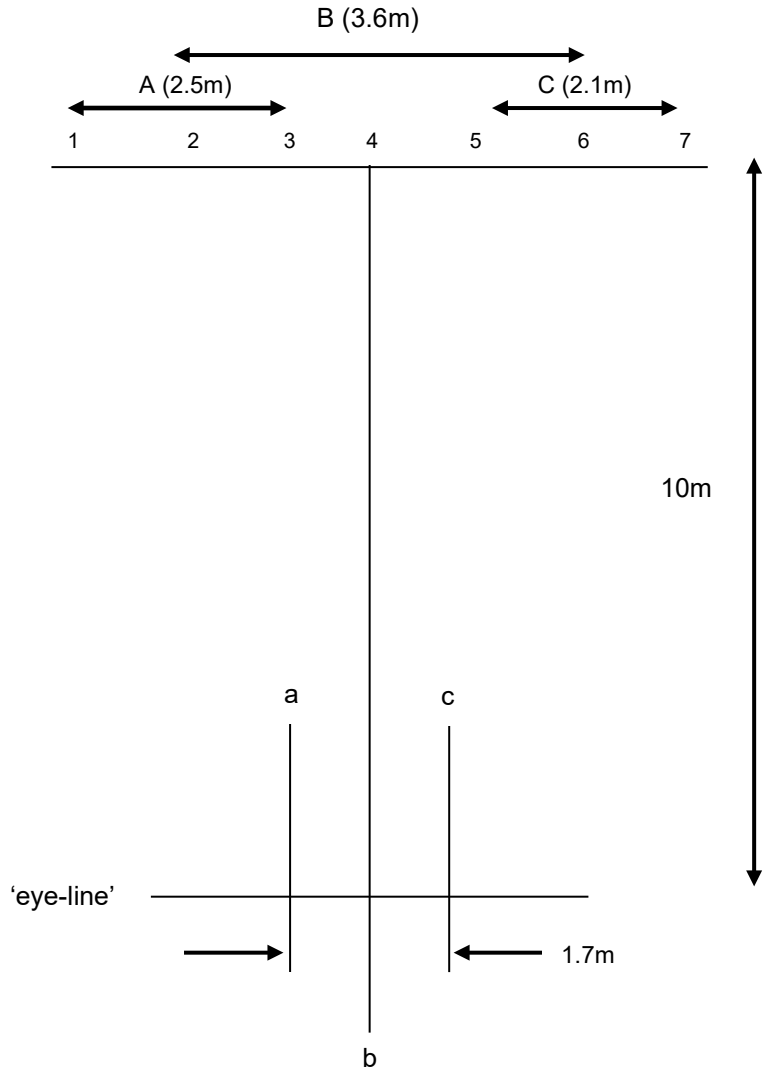

Figure 2: Pole (or wall) Markers

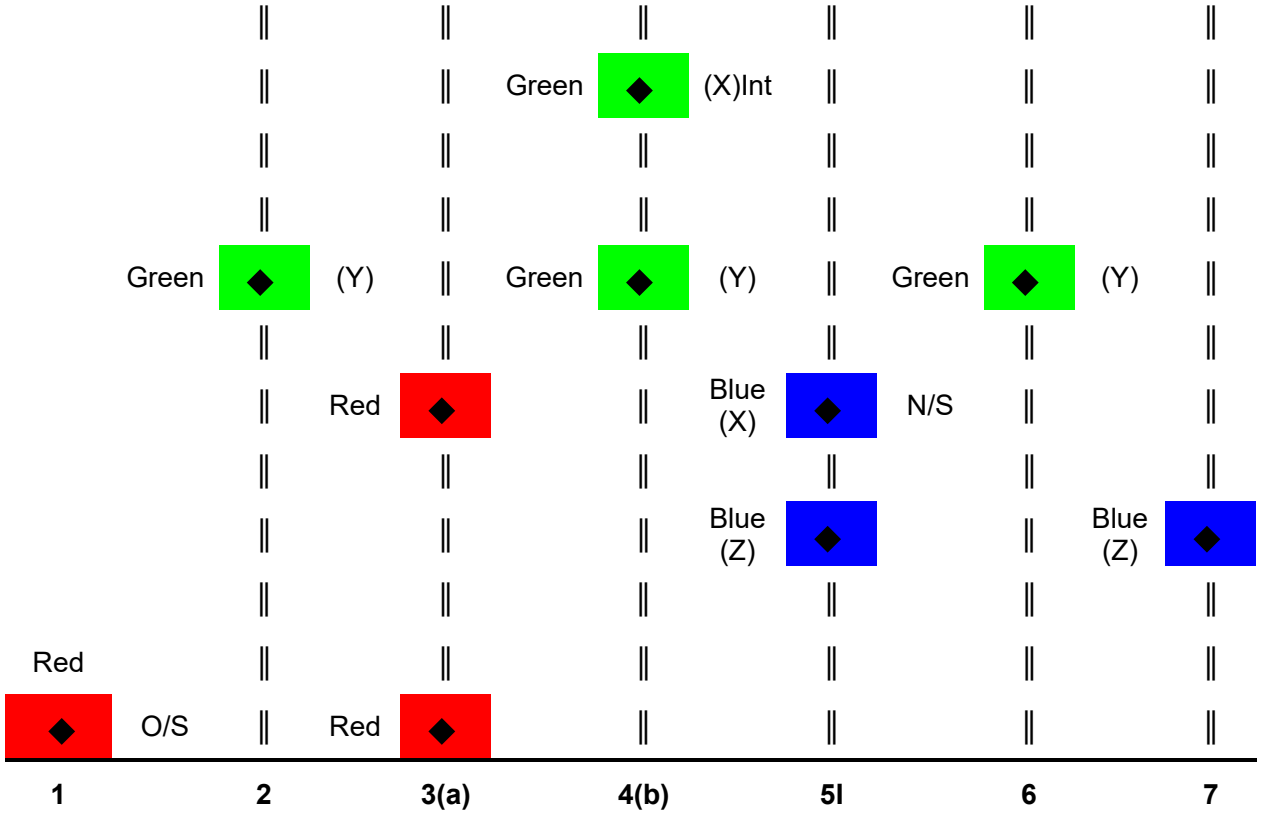

Annex 1 – Mirror Field of View 03 (Compact Layout)

Offside (O/S) Mirror

The field of view check for the obligatory offside mirror utilises markers at positions 1 and 3. The lower markers are positioned at floor level.

Position the offside extreme edge of the vehicle along line “a” (Fig. 1) If the driver’s seat is adjustable, move it to its rearmost position. When seated in the driver’s seat looking ahead and in a comfortable upright driving position, position the vehicle such that your eye position is aligned with the transverse “eye-line” (Fig. 1)

Measure the height of the top of the O/S mirror lens and position the upper marker on pole 3 at this height.

Check that from the driving position all three red markers at positions 1 and 3 are visible in the O/S mirror, i.e., the pole at position 3 from floor to the upper marker and the floor level markers from positions 1 to 3.

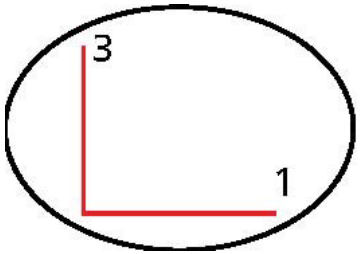

Acceptable view in O/S mirror

Interior Mirror

The field of view check for the obligatory interior mirror utilises markers at positions 2, 4 and 6. The positions of all markers are variable.

Position the longitudinal centre line of the vehicle along line “b” (Fig. 1) and as with the O/S mirror align your eye position with the transverse “eyeline”.

Measure the height of the top of the interior mirror lens (a spirit level can be used to transfer the height position outside the vehicle) and position the upper marker on pole 4 at this height (X). Using the table at Annex 1 locate the measured mirror height in the centre (X) column and note the corresponding measurement in the left hand (Y) column. Position the markers on poles 2 and 6 and the lower marker on pole 4 at this height.

If the height of the lens falls between the increments in column X use the next highest figure. If the height of the lens is outside the scope of the table, i.e., <500mm or >1500mm, take the Y figure to be X multiplied by 0.82, e.g., X = 1600, Y = 1600 x 0.82 = 1312mm.

Check that from the driving position pole 4 between the upper and lower markings and the horizontal line formed by the lower markers on poles 2, 4 and 6 are visible.

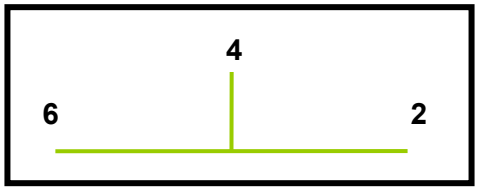

Acceptable view in interior mirror

If an interior mirror does not provide the required field of view, a nearside exterior mirror meeting the appropriate field of view requirement must be fitted.

Nearside (N/S) Mirror

If required, the field of view check for the N/S mirror utilises markers at positions 5 and 7. The positions of all markers are variable.

Position the nearside extreme edge of the vehicle along line “c” (Fig. 1) and as with the O/S mirror align your eye position with the transverse “eye-line”.

Measure the height of the top of the N/S mirror lens and position the upper marker on pole 5 at this height (X). Using the table at Annex 1 locate the measured mirror height in the centre (X) column and note the corresponding measurement in the right hand (Z) column. Position the marker on pole 7 and the lower marker on pole 5 at this height. If the height of the lens falls between the increments in column X use the next highest figure. If the height of the lens is outside the scope of the table, i.e., <500mm or >1500mm take the Z figure to be X multiplied by 0.475, e.g., X = 400, Z = 400 x 0.475 = 190mm.

Check that from the driving position pole 5 between the upper and lower markings and the horizontal line formed by the lower markers on poles 5 and 7 are visible.

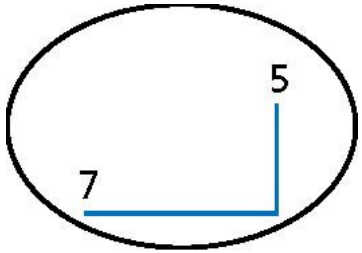

Acceptable view in N/S mirror

Note 1: While sitting in the driving position, facing forward, the respective field of view in each mirror should be obtainable by pivoting the eyes/head, without bodily movement.

Note 2: Obstruction by “sundry” items of up to 10% in the case of an exterior mirror is permitted. (Interior “sundry” items are head restraints, sun visors, rear window wipers, and other similar items. Exterior “sundry” items are bodywork, door handles, direction indicators, bumpers, or similar items.)

(Y) Interior Mirror Marker Lower Height (mm)	(X) Height To Top of Lens (mm)	(Z) Nearside Mirror Marker Lower Height (mm)
1230	1500	713
1222	1490	708
1214	1480	703
1205	1470	698
1197	1460	694
1189	1450	689
1181	1440	684
1173	1430	679
1164	1420	675
1156	1410	670
1148	1400	665
1140	1390	660
1132	1380	656
1123	1370	651
1115	1360	646
1107	1350	641
1099	1340	637
1091	1330	632
1082	1320	627
1074	1310	622
1066	1300	618
1058	1290	613
1050	1280	608
1041	1270	603
1033	1260	599
1025	1250	594
1017	1240	589
1009	1230	584
1000	1220	580
992	1210	575
984	1200	570
976	1190	565
968	1180	561
951	1160	551
943	1150	546
935	1140	542
927	1130	537

Annex 1 – Mirror Field of View 03 (Compact Layout)

(Y) Interior Mirror Marker Lower Height (mm)	(X) Height To Top of Lens (mm)	(Z) Nearside Mirror Marker Lower Height (mm)
918	1120	532
910	1110	527
902	1100	523
894	1090	518
886	1080	513
877	1070	508
869	1060	504
861	1050	499
853	1040	494
845	1030	489
836	1020	485
828	1010	480
820	1000	475
812	990	470
804	980	466
795	970	461
787	960	456
779	950	451
771	940	447
763	930	442
754	920	437
746	910	432
738	900	428
730	890	423
722	880	418
713	870	413
705	860	409
697	850	404
689	840	399
681	830	394
672	820	390
664	810	385
656	800	380
648	790	375
640	780	371
631	770	366
623	760	361

Annex 1 – Mirror Field of View 03 (Compact Layout)

(Y) Interior Mirror Marker Lower Height (mm)	(X) Height To Top of Lens (mm)	(Z) Nearside Mirror Marker Lower Height (mm)
615	750	356
607	740	352
599	730	347
590	720	342
582	710	337
574	700	333
566	690	328
558	680	323
549	670	318
541	660	314
533	650	309
525	640	304
517	630	299
508	620	295
500	610	290
492	600	285
484	590	280
476	580	276
467	570	271
459	560	266
451	550	261
443	540	257
435	530	252
426	520	247
418	510	242
410	500	238

Record of Revision

Revision	Date	Brief description of change
1	June 2010	Interior mirror view amended
2	January 2019	Figure 1 dimension B and pole position 7 added.

This page left intentionally blank.

04 Speedometer

Application: All vehicles except Low Powered Mopeds.

Method of Inspection	Required Standard
A vehicle can be fitted with either a dial or a digital speedometer, or both. A global positioning system (GPS) such as a Sat Nav device is **not** an acceptable alternative to a speedometer **Note 1:** It is acceptable for the marking (either mph or m/h) to be **permanently** marked on the dial glass and any reference to kph (km/h) removed (unless it is dual marked).	**1.** A speedometer must: a) be fitted. b) be capable of indicating the vehicle speed in miles per hour. c) indicate the speed up to the design speed of the vehicle. d) be within the direct field of view of the driver. e) be complete (including operating means). f) be secure. **2.** The speedometer (**Dial speedometer only**) must: a) be graduated at uniform intervals not exceeding 20mph (10mph in the case of low power mopeds). b) have graduations that begin at either 10mph or 20mph. c) have graduations that are permanently marked on the dial face. **3.** The speedometer must be able to be illuminated in such a way that the indicated speed can be read at all times of the day and night. **4.** The speedometer mph (or m/h) indication must be permanently marked (see **Note 1**).

Record of Revision

Revision	Date	Brief description of change
1	Jun 2005	All R&P amended with clarifications
2	Aug 2007	R&P 3 amended for indicated speed
3	Jun 2014	Note added to clarify non acceptability of GPS
4	Jan 2019	Application updated.
5	15/04/2025	Section revised.

05 Audible Warning

Application: All vehicles.

Method of Inspection	Required Standard
A horn is usually classified as an audible warning device and is defined as an instrument, not being a bell, gong, or siren, and capable of giving a continuous, uniform sound, which does not vary perceptibly during operation, intended to give warning of the presence of, or a manoeuvre by a vehicle in a dangerous road traffic situation. Mechanical audible warning devices shall be equipped with a thumb-operated lever, either of the puller bell type geared to rapidly rotate two loosely slung metal discs inside the bell housing, or of the single stroke bell type. Low Powered Mopeds may be fitted with a mechanical audible warning device. **Note 1**: This does not apply to a mechanical device.	**1.** The vehicle must be fitted with a horn or a mechanical device capable of giving an audible warning. **2.** The horn or mechanical device must: a) be secure. b) be operational. c) be loud enough (compared to a comparable machine). d) emit a sound which is continuous or uniform (see **Note 1**). e) be capable of being operated safely whilst remaining in control of the vehicle, and in respect of vehicles fitted with handlebar type steering, with both hands on the steering control.

Record of Revision

Revision	Date	Brief description of change
1	June 2010	R&P 1. e) amended, R&P/RfR 1. f) added.
2	January 2019	Application expanded; mechanical device added to R&P.
3	15/04/2025	Section revised, RS1 e) amended to clarify applicable type of steering control.

06 Lighting

Application: All obligatory and optional lamps (where fitted).

Method of Inspection	Required Standard
Lamp/Reflector positional requirements achieved by the external masking of part, or the entire illuminated surface are acceptable as long as it is of a permanent nature. Front directional indicator intensity must be assessed with the headlamp dipped beam switched on. Headlamps should not be compared for brightness but must emit sufficient light to illuminate the road in front of the vehicle on dipped and main (where applicable) beams. On twin headlamp systems fitted to two wheeled vehicles one or both headlamps can be illuminated for dipped or main beam. It is permissible that all front lamps move with the steering angle on vehicles where they are designed to do so. Lighting switches must operate positively, i.e., they must not have to be held in the on position to operate any lamps except for a headlamp flash switch. The Annexes to this section detail the required lamp tell-tales according to the vehicle type. When assessing white LED lamps for colour; an ‘E’ or ’e’ marked assembly will be deemed to have met the colour requirements. When assessing lamps for visibility from the front and rear the Examiner should satisfy themselves that the relevant lamps can be seen from a position on the vehicles longitudinal centre line, 2 metres	**1.** The vehicle must be fitted with lamps or retro reflective material only capable of showing a white light to the front, except for in the case of an indicator or fog lamp (see **Note 1**). **2.** The vehicle must be fitted with lamps or retro reflective material only capable of showing a red light to the rear, except for: • an amber light from a directional indicator. • a white light from a reversing lamp, interior lamp (bodied vehicles only), or a registration plate lamp. • yellow reflected light from a registration plate. **3.** All obligatory (and optional where fitted) lamps and reflectors: a) the correct number must be fitted. b) must be secure, operational, and complete. c) must be correctly positioned. d) must be the correct colour. e) except in the case of a headlamp, must have a similar brightness when compared to a lamp from a vehicle meeting ECWVTA. f) must be visible from the front or rear as required.

Method of Inspection	Required Standard
in front of and behind the vehicle (when checking forward facing and rearward facing lamps respectively) and 1.5 metres above the ground. ECWVTA means 'European Community Whole Vehicle Type Approval'. **Positional Requirements** Positional requirements for obligatory lamps can be found at Annexes 1 to 7. The vehicle must be assessed with the steering in the "straight ahead" position. Single lamps must be fitted on the centre line of the vehicle. Multiple lamps must be fitted symmetrically to the centre line of the vehicle. Twin headlamps may be fitted one above the other. A single front position lamp may be fitted to one side of another lamp, e.g., headlamp. If this is the case the lamps must be fitted symmetrically to the centre line of the vehicle. Positional requirements for headlamps located "at front of the vehicle" can be considered met if the light emitted does not disturb the driver directly or indirectly. Positional requirements for lamps located "at rear of the vehicle," should be judged as the practicable rearmost point. Pedals are defined as devices that may function as a means of propulsion instead of the engine. "From the outermost part of the vehicle" means the extreme outer edge of the bodywork disregarding tyres, mirrors, lamps, etc. (but	**4.** Any required light switch: a) must be fitted. b) must be operative. c) must be secure. d) must be in a safe operating position (see **Note 2**). **5.** A main (where applicable) / dipped headlamp switch must operate all main beam headlamps simultaneously when switched from dipped to main beam, and from main to dipped beam (see **Note 3**). **6.** A stop lamp (where applicable): a) must emit a steady red light when any service brake is applied. b) must not remain on when the brake is released. **7.** A directional indicator (where fitted) must be capable of flashing constantly at a rate of between 60 to 120 times per minute (see **Note 4**). **8.** A hazard warning device: a) must be fitted when required. b) must operate with the ignition switched both on and off (see **Note 5**). c) must operate all the indicators either simultaneously or alternately front, then rear.

Method of Inspection	Required Standard
including the mudguard of a wheel fitted outside sidecar bodywork). Where any distance between lamps or between lamps and the outermost part of the vehicle is specified, the measurement is the distance measured from the closest edge of the illuminating surface(s). Minimum height is measured to the lower edge of the illuminated area, and maximum to the highest, other than in the case of a dipped beam lamp where the minimum height is measured to the apparent trace of the beam cut off (i.e., lamp centre). **Note 1:** Category L3e vehicles may be fitted with Two (one per side) amber front position lamps. Where the front position lamp is reciprocally incorporated in the front direction indicator lamp, the position lamp on the same side as the direction indicator lamp must switch off when that direction indicator lamp is flashing. **Note 2:** Switches for headlamp dip/main and direction indicators must be fitted in such a way that they can be operated safely whilst remaining in control of the vehicle, and in respect of handlebar type steering, with both hands remaining on the steering control. **Note 3:** It is acceptable for the dipped beam to remain lit at the same time as the main beam. **Note 4:** On some mopeds it is permissible for directional indicators to flash at between 45 to 120 times per minute. This check must be conducted with the engine running and the throttle **up to** 50% open. Care must be taken when assessing a moped with automatic clutch (twist and go). **Note 5:** 'Off' means the switch in a position where the engine cannot operate	d) must have an operational, closed-circuit tell-tale fitted that is either optical or auditory or both. If optical it may be incorporated with the indicator tell-tale lamp. If entirely auditory, it must be clearly audible to the driver. **9.** A rear fog lamp (where fitted) must: a) be fitted with a closed-circuit tell-tale lamp visible to the driver. b) not be illuminated unless one or more of the main beam, dipped beam headlights or the front fog lamps are lit. c) be able to be switched off independently of any front fog lamps. d) have a minimum distance of 100mm from any stop lamp. e) be positioned squarely to the rear. **10.** A front fog lamp (where fitted) must be able to be switched on or off independently from the main or dipped beam lamps. **11.** Headlamp(s): a) must not be of the 'gas discharge' type. b) must emit sufficient light on either dipped or main beam to illuminate the road in front of the vehicle. **12.** Front position lamp(s): a) must have a circuit closed tell-tale fitted (where required) (see **Note 6**).

Method of Inspection	Required Standard
Note 6: A separate tell-tale is not required if the instrument panel lighting can only be switched on or off with the positional lamp(s), or if the lamp(s) are automatically lit when the vehicle is in operation.	b) the switch must operate the rear position lamp(s) and the rear registration plate lamp(s) simultaneously. **13.** All rear and side retro-reflectors must be of the non-triangular type. **14.** Reversing lamp(s) must only illuminate with the vehicle in reverse gear and with the ignition switched on.

Record of Revision

Revision	Date	Brief description of change
1	June 2010	Additional notes, R&P/RfF 3. D) added, R&P 8. B) note added minor text changes
2	January 2019	Add note to R&P 8
3	September 2022	Note 1 added. R&P & RfF 1. (a) amended to reference Note 1.
4	15/04/2025	Section revised. Clarification of applicable steering control at Note 2.

This page intentionally left blank.

06 Annex 1- Lighting requirements for 2 Wheel Mopeds & Low Powered Mopeds

Obligatory
Dipped beam
Rear position
Stop
Registration
Non-triangular rear reflector
Pedal reflectors

Optional
Main beam
Front position
Daytime running lamp
Front indicator
Rear indicator
Non-triangular front reflector
Non-triangular side reflector

Example of a 2 wheel moped

Obligatory

Lamps	Colour	Number	Position
Dipped beam	White	1 or 2 max	At front of vehicle Min height 500mm Max height 1200mm Max 200mm between any dipped and/or main beam lamps
Rear position	Red	Min. 1	At rear of vehicle Min height 250mm Max height 1500mm
Stop	Red	Min. 1	Min height 250mm Max height 1500mm **Note:** There is no requirement for a stop lamp to be fitted to a low powered moped.
Registration	White	Min. 1	Must illuminate rear registration plate area. **Note:** There is no requirement for a registration plate lamp on a 250W LPM that will not be registered.
Non-triangular rear reflector	Red	Min. 1	At the rear facing to the rear Min height 250mm Max height 900mm

Lamps	Colour	Number	Position
Pedal reflectors	Amber	2 per pedal min., 1 each facing front and rear	Only required when non-retractable pedals are fitted and clearly visible both to the front and rear of the vehicle

Optional

Lamps	Colour	Number	Position
Main beam	White	Min. 1	Max 200mm between illuminating surfaces of twin dipped and/or main beam lamps. The distance between the edge of the illuminating surface of any independent main beam and the edge of that dipped beam headlamp must not exceed 200mm
Front position	White	Min. 1	At the front Min height 350mm Max height 1200mm
Daytime running	White	Min. 1 Max. 2	Min. height 250mm Max. height 1500mm **Vehicles >1300mm wide must be fitted with 2 lamps** Min distance between internal edges: Vehicle width >1300mm = 500mm
Front indicator	Amber	Max. 2	Min height 350mm Max height 1200mm Min distance apart 240mm
Rear indicator	Amber	2 or 4 max	Height as front Min distance apart 180mm Max 300mm from rear
Non-triangular front reflector	White	Min. 1	Min height 400mm Max height 1200mm
Non-triangular side reflector	Amber or Red at rear	Min. 1	Min height 300mm Max height 1000mm Must not be obscured by driver or passenger

Record of Revision

Revision	Date	Brief description of change
1	June 2005	Red side reflector added.
2	June 2010	Title amended, reference to non- registered vehicles removed, rear indicator number clarified.
3	January 2019	Title amended, stop, registration plate lamp and pedal reflector requirement clarified.
4	15/04/2025	Optional side Reflector height increased. Optional daytime running lamps added to table.

This page left intentionally blank.

06 Annex 2- Lighting requirements for 3 Wheel Mopeds & Light Quadricycles

Obligatory
Dipped beam
Front position
Rear position
Front Indicator
Rear Indicator
Stop
Registration
Non-triangular rear Reflector

Optional
Main beam
Daytime running
Front fog
Rear fog
Hazard warning
Reversing
Non-triangular side Reflector

Example of a 3 wheel moped

Example of a light quadricycle

Obligatory

Lamps	Colour	Number	Position
Dipped beam	White	1 or 2	At front of vehicle Min Height 500mm Max height 1200mm Max 200mm between any dipped and/or main beam lamps **If 2 dipped beam lamps are fitted, they must also meet the following:** Max 400mm from outermost edge of vehicle Can be reduced to 400mm if vehicle is <1300mm wide
Front position	White	Min. 1	At front of vehicle. If the widest point of the vehicle is not at the front it is permissible for 2 additional lamps to be fitted. Min height 350mm Max height 1200mm Vehicles >1300mm wide must be fitted with 2 position lamps which must be: Max 400mm from outermost edge of vehicle. Min 500mm distance between illuminating surfaces

Lamps	Colour	Number	Position
Rear position	Red	Min. 1	At the rear of vehicle Min height 300mm Max height 1500mm Vehicles >1300mm wide must be fitted with 2 position lamps. Vehicles >1300mm wide with 2 rear wheels must have min 600mm distance between illuminating surfaces. Vehicles <1300mm with 2 rear wheels may have 400mm between illuminating surfaces
Front Indicator	Amber	Max. 2	**Bodied 3-wheel mopeds only** Min height 350mm Max height 1500mm Max 400mm from outermost edge of vehicle. Min 500mm distance between illuminating surfaces **Light quadricycles and unbodied 3-wheel mopeds only:** Min. 240mm distance between illuminating surfaces.
Rear Indicator	Amber	2 or 4 max.	As front
Stop	Red	Min. 1	Min height 250mm Max height 1500mm **Vehicles >1300mm wide must be fitted with 2 stop lamps.** **Vehicles >1300mm wide with 2 rear wheels** must have min 600mm distance between illuminating surfaces. **Vehicles <1300mm with 2 rear wheels** may have 400mm between illuminating surfaces
Registration	White	Min. 1	Must illuminate rear registration plate area.
Non-triangular rear Reflector	Red	Min. 1	At the rear facing to the rear Min height 250mm Max height 900mm **Vehicles >1000mm wide must be fitted with 2 rear reflectors** which must have a maximum distance of 400mm from the outermost edge of the vehicle and a minimum distance of 400mm between internal edges or 500mm for vehicles >1300mm

Optional

Lamps	Colour	Number	Position
Main beam	White	Min. 1	Max 200mm between illuminating surfaces of dipped beam headlamp for any pair of lamps **Vehicles >1300mm wide must be fitted with 2 lamps**
Daytime running	White	Min. 1 Max. 2	Min. height 250mm Max. height 1500mm **Vehicles >1300mm wide must be fitted with 2 lamps** Min distance between internal edges: Vehicle width >1300mm = 500mm
Front fog	White/Yellow	Min. 1 Max. 2	Min. height 250mm Max. height not above highest point of dipped beam headlamp Max. 400mm from outside edge of vehicle
Rear fog	Red	Min. 1 Max. 2	Min height 250mm Max height 900mm Min 100mm from stop lamp In the case of vehicles with two rear wheels - at least 600 mm between the two lamps. This distance may be reduced to 400 mm if the maximum width of the vehicle is less than 1300 mm Tell-tale compulsory
Hazard warning	Amber	As indicators	As indicators Tell-tale compulsory
Reversing	White	Min. 1 Max. 2	Min height 250mm Max height 1200mm
Non-triangular side Reflector	Amber or Red at rear	Min. 1	Min height 300mm Max height 900mm Must not be obscured by driver or passenger

Record of Revision

Revision	Date	Brief description of change
1	June 2005	Red side reflector added
2	August 2014	Dipped beam wording corrected; rear position lamp max height corrected
3	15/04/2025	Add requirements applicable to light quadricycles and unbodied three wheeled mopeds to Front Direction Indicators table (TSE MSVA 006 021). Remove 500mm separation requirements for Dipped beam headlamps (TSE 006 023). Optional daytime running lamps added to table.
4	15/09/2025	Front fog, Rear fog, Hazard warning, & Reversing lamps added to Optional lamps table.

06 Annex 3 – Lighting requirements for Solo Motorcycles

Obligatory
Main beam
Dipped beam
Front position
Rear position
Front indicator
Rear indicator
Stop
Registration
Non-triangular rear reflector

Optional
Non-triangular side reflector
Front fog
Rear fog
Hazard Warning

Example of a solo motorcycle

Obligatory

Lamps	Colour	Number	Position
Main beam	White	Min. 1	At the front of vehicle Max 200mm between any dipped and/or main beam lamps.
Dipped beam	White	1 or 2 max	At the front of vehicle Min height 500mm Max height 1200mm Distance apart as above
Front position	White or Amber	Min. 1 (Min. 2 if Amber)	At the front of vehicle Min height 350mm Max height 1200mm Tell-tale compulsory
Rear position	Red	Min. 1	At the rear of vehicle Min height 250mm Max height 1500mm
Front indicator	Amber	Max. 2	Min height 350mm Max height 1200mm Min distance apart 240mm

Lamps	Colour	Number	Position
Rear indicator	Amber	2 or 4 max	Height as front Min distance apart 180mm Max 300mm from rear
Stop	Red	Min. 1	Min height 250mm Max height 1500mm
Registration	White	Min. 1	Must illuminate registration plate area
Non-triangular rear reflector	Red	Min. 1	At the rear facing to the rear Min height 250mm Max height 900mm

Optional

Lamps	Colour	Number	Position
Non-triangular side reflector	Amber or red at rear	1 or 2 per side	Min height 300mm Max height 900mm Must not be obscured by rider/passenger
Front fog	White/ yellow	No specification	Min height 250mm Max not above highest point of dipped beam headlamp
Rear fog	Red	1 or 2 max	Min height 250mm Max height 900mm Min 100mm from stop lamp Tell-tale compulsory
Hazard Warning	Amber	As indicators	As indicator lamps Tell-tale compulsory

Record of Revision

Revision	Date	Brief description of change
1	June 2005	Red side reflector added.
2	June 2010	Title updated; rear reflector number updated.
3	September 2022	Updated front position lamp colour requirements.

This page left intentionally blank.

06 Annex 4 – Lighting requirements for Motorcycles with Sidecar

Obligatory
Main beam
Dipped beam
Front position
Rear position
Front indicator
Rear indicator
Stop
Registration
Non-triangular rear reflector

Optional
Non-triangular side reflector
Front fog
Rear fog
Hazard Warning

Example of a motorcycle with side car

Obligatory

Lamps	Colour	Number	Position
Main beam	White	Min. 1	At the front of vehicle Max 200mm between any dipped and/or main beam lamps.
Dipped beam	White	1 or 2 max	At the front of vehicle Min height 500mm Max height 1200mm Distance apart as above
Front position	White or Amber	2 or 3 1 only on sidecar	Min height 350mm Max height 1200mm Max 400mm from the outermost edge of vehicle. 3rd lamp (where fitted) must be symmetrical to the lamp fitted to the motorcycle. Tell-tale compulsory
Rear position	Red	2 or 3 1 only on sidecar	Min height 250mm Max height 1500mm Max 400mm from the outermost edge of vehicle. 3rd lamp (where fitted) must be symmetrical to lamp fitted to the motorcycle

Lamps	Colour	Number	Position
Front indicator	Amber	2 max	Max 400mm from the outermost edge of vehicle. Min distance apart 600mm Sidecar indicator must sit forward of the midway point of the car
Rear indicator	Amber	2 or 4 max	Max 400mm from the outermost edge of vehicle. Min distance apart 600mm Sidecar indicator must sit behind of the midway point of the car. Motorcycle indicator must be within 300mm of the rearmost point
Stop	Red	Min. 1 1 only fitted to sidecar	At the rear of the vehicle Min height 250mm Max height 1500mm Max 400mm from the outermost edge of the vehicle
Registration	White	Min. 1	Must illuminate rear registration plate area.
Non-triangular rear reflector	Red	Min. 2	At the rear facing to the rear Min height 250mm Max height 900mm Max 400mm from the outermost edge of the vehicle. Min distance between internal edges: Vehicle width >1300mm = 500mm <1300mm = 400mm

Optional

Lamps	Colour	Number	Position
Non-triangular side reflector	Amber or red at rear	1 or 2 per side	Min height 300mm Max height 900mm Must not be obscured by rider/passenger
Front fog	White/ yellow	1 or 2	Min height 250mm Max not above highest point of dipped beam headlamp Max 400mm from outermost edge of vehicle.

Lamps	Colour	Number	Position
Rear fog	Red	1 or 2 max	On the centreline or to the offside of the vehicle Min height 250mm Max height 900mm Min 100mm separation from stop lamp Tell-tale compulsory
Hazard Warning	Amber	As indicators	As indicator lamps Tell-tale compulsory

Record of Revision

Revision	Date	Brief description of change
1	June 2005	Red side reflector added, stop lamp position corrected.
2	June 2010	Front and rear position lamp numbers clarified.

06 Annex 5 – Lighting requirements for Motorcycle Tricycles

Obligatory
Main beam
Dipped beam
Front position
Rear position
Front indicator
Rear indicator
Stop
Registration
Non-triangular rear reflector
Hazard warning

Optional
Non-triangular side reflector
Daytime running
Front fog
Rear fog
Reversing

Example of a motorcycle tricycle

Obligatory

Lamps	Colour	Number	Position
Main beam	White	Min. 1	At the front of the vehicle Max 200mm between single dipped and main beam lamps **Vehicles >1700mm wide** must be fitted with 2 lamps
Dipped beam	White	1 or 2	At the front of the vehicle Min. height 500mm Max. height 1200mm Max. 200mm from a single main beam headlamp **Vehicles >1700mm wide must be fitted with 2 lamps** **If 2 dipped beam headlamps are fitted side by side:** Max 400mm from outermost edge of vehicle. Can be reduced to 400mm if vehicle is <1300mm wide
Front position	White	Min. 1	At front of vehicle and/or on rear mudguards Min height 350mm Max height 1200mm **Vehicles >1300mm wide must be fitted with 2 position lamps** which must be: Max 400mm from outermost part of vehicle.

Lamps	Colour	Number	Position
			Min 500mm distance between illuminating surfaces. Tell-tale compulsory
Rear position	Red	Min. 1	At rear of vehicle Min height 250mm Max height 1500mm **Vehicles >1300mm wide must be fitted with 2 position lamps** **Vehicles >1300mm,** the lamps must have min 600mm between illuminating surfaces **Vehicles <1300mm wide,** may reduce the min separation to 400mm
Front indicator	Amber	Max. 2	Min height 350mm Max height 1500mm Min 240mm distance between illuminating surfaces
Rear indicator	Amber	2 or 4 max	Min height 350mm Max height 1500mm Max 400mm from outermost edge of vehicle Min 500mm distance between illuminating surfaces
Stop	Red	Min. 1	Min height 250mm Max height 1500mm **Vehicles >1300mm wide must be fitted with 2 stop lamps.** **Vehicles >1300mm wide with 2 rear wheels** must have min 600mm distance between illuminating surfaces. **Vehicles <1300mm with 2 rear wheels** may have min 400mm between illuminating surfaces
Registration	White	Min. 1	Must illuminate rear registration plate area.
Non-triangular rear reflector	Red	Min. 1	At the rear facing to the rear Min height 250mm Max height 900mm Vehicles >1000mm wide must be fitted with 2 rear reflectors which must be not more than 400mm from the outermost edge of the vehicle. Min distance between internal edges: Vehicle width

Lamps	Colour	Number	Position
			>1000mm = 400mm >1300mm = 500mm
Hazard warning	Amber	As indicators	As indicators Tell-tale compulsory

If the vehicle width is less than that required for two obligatory headlamps to be fitted (1700mm) headlamps fitted one above the other, where both are on the centre line of the vehicle, will be acceptable. If the lamps are side by side, they must meet the spacing requirements for two obligatory headlamps OR be set up as one dipped beam headlamp and one main beam. Examples of acceptable multi lamp layouts are shown at Annex 7.

Optional

Lamps	Colour	Number	Position
Non-triangular side reflector	Amber or red at rear	1 or 2 per side	Min height 300mm Max height 900mm Must not be obscured by rider/passenger
Daytime running	White	Min. 1 Max. 2	Min. height 250mm Max. height 1500mm **Vehicles >1300mm wide must be fitted with 2 lamps** Min distance between internal edges: Vehicle width >1300mm = 500mm
Front fog	White/ yellow	1 or 2 max.	Min height 250mm Max not above highest point of dipped beam headlamp Max 400mm from outside edge of vehicle
Rear fog	Red	1 or 2 max.	Min height 250mm Max height 900mm Min 100mm from stop lamp Tell-tale compulsory
Reversing	White	1 or 2 max.	Min height 250mm Max height 1200mm

Record of Revision

Revision	Date	Brief description of change
1	June 2005	Main and dipped beam position clarified; red side reflectors added.
2	August 2007	Note on headlamp positioning added.
3	June 2010	Title amended.
4	15/04/2025	Remove 500mm separation requirements for Dipped beam headlamps (TSE 006 023). Optional daytime running lamps added to table.

06 Annex 6 – Lighting requirements for Tricycles (other than Motorcycle) and Heavy Quadricycles

Obligatory
Main beam
Dipped beam
Front position
Rear position
Front indicator
Rear indicator
Stop
Registration
Non-triangular rear reflector
Hazard warning

Optional
Non-triangular side reflector
Daytime running
Front fog
Rear fog
Reversing

Example of a tricycle

Example of a heavy quadricycle

Obligatory

Lamps	Colour	Number	Position
Main beam *	White	Min. 1	At the front of the vehicle Max 200mm between single dipped and main beam lamps **Vehicles >1300mm wide** must be fitted with 2 lamps
Dipped beam *	White	1 or 2	At the front of the vehicle Min height 500mm Max height 1200mm Max 200mm from a single main beam headlamp **Vehicles >1300mm wide must be fitted with 2 lamps** **If 2 dipped beam headlamps are fitted side by side:** Max 400mm from outermost edge of vehicle
Front position	White	Min. 1	At front of vehicle Min height 350mm Max height 1200mm

Lamps	Colour	Number	Position
			Vehicles >1300mm wide must be fitted with 2 position lamps which must be: Max 400mm from outermost part of vehicle. Min 500mm distance between illuminating surfaces. Tell-tale compulsory
Rear position	Red	Min. 1	At rear of vehicle Min height 250mm Max height 1500mm **Vehicles >1300mm wide must be fitted with 2 position lamps** **Vehicles >1300mm with 2 rear wheels,** the lamps must have min 600mm between illuminating surfaces **Vehicles <1300mm wide with 2 rear wheels,** the lamps may have a min 400mm between illuminating surfaces **Vehicles with a single rear wheel,** the lamps can be fitted within the rear half of the vehicle
Front indicator	Amber	2 max	Min height 350mm Max height 1500mm Max 400mm from the outermost edge of the vehicle Min 500mm between illuminating surfaces
Rear indicator	Amber	2 or 4 max	Min height 350mm Max height 1500mm Min 500mm distance between illuminating surfaces **Vehicles with a single rear wheel,** the lamps can be fitted within the rear half of the vehicle
Stop	Red	Min. 1	Min height 250mm Max height 1500mm **Vehicles >1300mm wide must be fitted with 2 stop lamps.** **Vehicles >1300mm wide with 2 rear wheels** must have min 600mm distance between illuminating surfaces. **Vehicles <1300mm with 2 rear wheels** may have min 400mm between illuminating surfaces

Annex 6 – Lighting requirements for Tricycles (other than Motorcycle) and Heavy Quadricycles 06

Lamps	Colour	Number	Position
Stop			**Vehicles with a single rear wheel** the lamps can be fitted within the rear half of the vehicle
Registration	White	Min. 1	Must illuminate rear registration plate area
Non-triangular rear reflector	Red	Min. 1	At rear of vehicle, or on the rear of the front mudguard for **vehicles with a single rear wheel**, facing to the rear Min height 250mm Max height 900mm **Vehicles >1000mm wide must be fitted with 2 rear reflectors** which must be not more than 400mm from the outermost edge of the vehicle. **Vehicles >1300mm wide** must have a min 500mm between reflecting surfaces
Hazard warning	Amber	As indicators	As indicators Tell-tale compulsory

*** Note:** If the vehicle width is less than that required for two obligatory headlamps to be fitted (1300mm) headlamps fitted one above the other, where both are on the centre line of the vehicle, will be acceptable. If the lamps are side by side, they must meet the spacing requirements for two obligatory headlamps OR be set up as one dipped beam headlamp and one main beam. Examples of acceptable multi lamp layouts are shown at Annex 7.

Optional

Lamps	Colour	Number	Position
Non-triangular side reflector	Amber or red at rear	1 or 2 per side	Min height 300mm Max height 900mm Must not be obscured by rider/passenger
Daytime running	White	Min. 1 Max. 2	Min. height 250mm Max. height 1500mm **Vehicles >1300mm wide must be fitted with 2 lamps**

Annex 6 – Lighting requirements for Tricycles (other than Motorcycle) and Heavy Quadricycles 06

Lamps	Colour	Number	Position
			Min distance between internal edges: Vehicle width >1300mm = 500mm
Front fog	White/ yellow	1 or 2 max.	Min height 250mm Max not above highest point of dipped beam headlamp Max 400mm from outside edge of vehicle
Rear fog	Red	1 or 2 max.	Min height 250mm Max height 900mm Min 100mm from stop lamp Tell-tale compulsory
Reversing	White	1 or 2 max.	Min height 250mm Max height 1200mm

Annex 6 – Lighting requirements for Tricycles (other than Motorcycle) and Heavy Quadricycles 06

Record of Revision

Revision	Date	Change
1	June 2005	Optional table title corrected; red side reflectors added.
2	August 2007	Note on headlamp positioning added.
3	June 2010	Title amended.
4	15/04/2025	Remove 500mm separation requirements for Dipped beam headlamps (TSE 006 023). Optional daytime running lamps added to table.
5	06/11/2026	Reference to Note added to Obligatory table.

Annex 6 – Lighting requirements for Tricycles (other than Motorcycle) and Heavy Quadricycles 06

This page left intentionally blank.

06 Annex 7 – Acceptable multi-lamp options for 3 & 4 wheeled vehicles not requiring two obligatory headlamps

Acceptable multi-lamp options for vehicles not requiring two obligatory headlamps are shown below.

D=Dipped beam. **M**=Main beam.

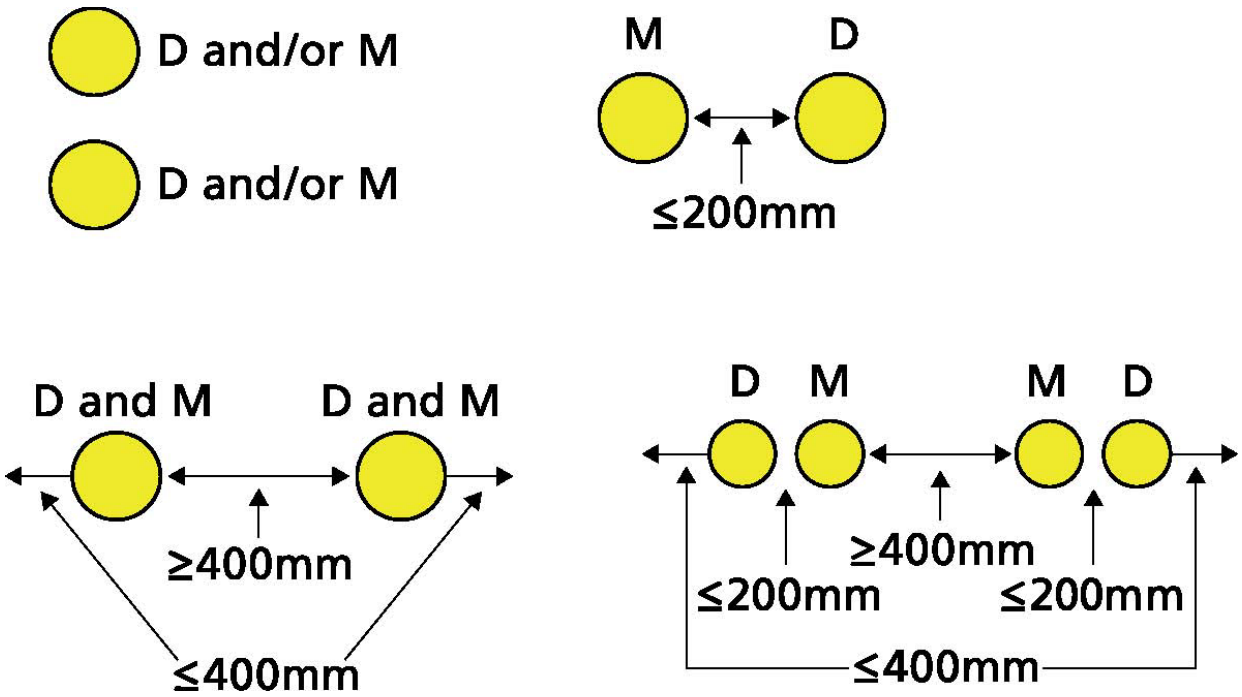

Note: These layouts assume the lamps are being viewed from a position ahead of the vehicle

Record of Revision

Revision	Date	Change
1	August 2007	Section added.

Annex 7 – Acceptable multi-lamp options for 3 & 4 wheeled vehicles not requiring two obligatory headlamps 06

07 Unauthorised Use

Application: All vehicles with the exception of mopeds. However, if a device is fitted to a moped, it must meet the requirements.

Method of Inspection	Required Standard
The device may be mechanical or electrical, or an electronic immobiliser or a combination of these in addition to any switch normally used to start the engine. Mechanical devices must act positively to lock the steering or transmission system, or both. **Note 1:** Where a mechanical locking device (e.g. a steering column lock) is fitted, it must be designed so that it cannot inadvertently engage in a manner that would result in jamming or locking which could constitute a safety hazard.	**1.** The vehicle must be fitted with an operational device preventing unauthorised use of the vehicle. Where a mechanical device is fitted, it must act on either the steering or the transmission, or on both of these systems. **2.** The device must not act upon the vehicle braking system. **3.** A mechanical protective device must not be likely to accidentally jam when the vehicle is in motion (see **Note 1**).

Record of Revision

Revision	Date	Change
1	August 2007	R&P/RfR 1 and 2 amended.
2	June 2010	Application note added, R&P/RfR 1 amended.
3	15/04/2025	Section format revised.
4	15/09/2025	Correction of text and clarification of requirements at RS 1 (TSE MSVA 007 001)
5	06/11/2026	RS 3 revised to clarify requirements and new Note 1 referenced from RS 3 (MSVA TSE 007 002).

Unauthorised Use 07

08 External Projections – Unbodied Vehicles

Application: All unbodied vehicles.

Method of Inspection	Required Standard
The requirements do not apply to the space between the motorcycle and sidecar in motorcycle combinations. If a vehicle has provision for 2-foot positions, e.g., normal, and forward controls, the vehicle must be assessed with the presenter's feet in both positions. Where mopeds are fitted with non-retractable pedals, compliance with the requirements for the pedals is optional. Pedals are defined as devices that may function as a means of propulsion instead of the engine. All external projections covered by this examination are considered to meet the requirements if they are made from, or covered with, a material having a hardness of less than 60 Shore A, offering a degree of protection. If an item is modified to meet this requirement, the item must be assessed against known materials, methods of manufacture and attachment of such materials likely to be used by a manufacturer of mass-produced vehicles. The materials and methods used may be acceptable if they are permanent and durable. For example, pipe lagging, etc., would be considered unacceptable. **Note 1:** It is acceptable for the underside of the 'ball end' to be flat and/or hollow.	**1.** Any point on the upper edge of the windshield (where fitted) must: a) have a radius of curvature of at least 2mm, or b) be covered with an edge protection material having a hardness of less than 60 Shore A. **2.** The ends of the clutch and brake levers must be perceptibly spherical and have a radius of curvature of at least 7mm (see **Note 1**). **3.** The leading edge of the front mudguard must have a radius of curvature of at least 2mm. **4.** The rear edge of any filler cap located on the upper surface of the fuel tank (which is likely to be struck by the rider in the event of a collision): a) where it protrudes less than 15mm above the surface, must be smooth or perceptibly spherical, or b) where it protrudes more than 15mm above the surface, must be fitted with a protective device (see **Figure 1**). **5.** The ignition key(s) must be fitted with a protective cap.

Method of Inspection	Required Standard
	6. Any projection deemed to graze the testing device (see **Annex 1**): a) in the case of a plate, must have a corner with a radius of curvature of at least 3mm. b) in the case of a plate, must have an edge which is blunted. c) in the case of a stem, must have a diameter of at least 10mm. d) must have edges (on the end of the stem) with a radius of curvature of at least 2mm. **7.** Any projection deemed to collide with the testing device (see **Annex 1**): a) in the case of a plate, must have a radius of curvature of at least 2mm. b) in the case of a stem, where the stem has a diameter of less than 20mm, the length of the stem must not exceed half the diameter measured from the point of contact of the assessment device. c) in the case of a stem, where the stem has a diameter of 20mm or more, the edges (on the end of the stem) must have a radius of curvature of at least 2mm. **8.** Other than the above, any protruding parts pointing outwards and likely to increase the risk or seriousness of body lesions suffered by any person struck or grazed by the vehicle **in the event of an accident** must not be pointed or sharp.

Figure 1

Example of a protective device. The protective device could be of up to 60 Shore A or a harder material with a smooth rounded finish that does not increase the risk of injury if struck

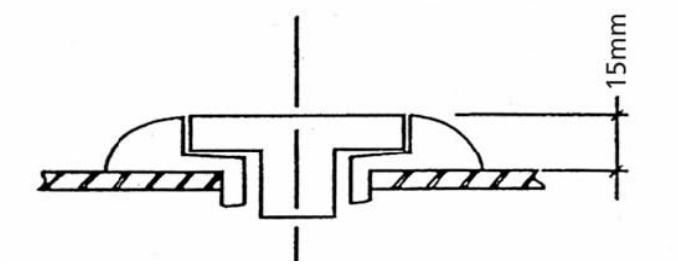

Annex 1 – Projection Assessment

When using the testing device (Projection Assessment Tester), the machine must be held in a straight line and a vertical position with both wheels touching the ground, the steering being free to move within its normal range.

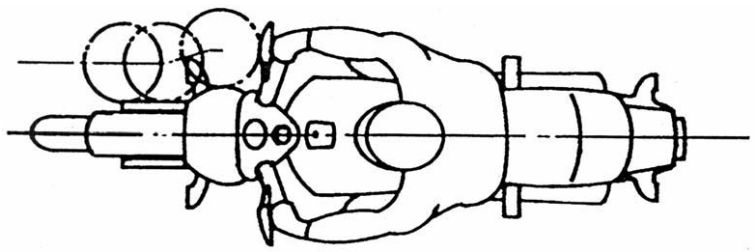

Move the testing device from the front towards the rear of the vehicle to ascertain if any projection coming into contact with the device either grazes or collides with it (Figure (a)) If the device is able to strike the steering control the control must be rotated to its full lock position and the device must remain in contact with the vehicle (Figure (b)). The test shall be conducted on both sides of the vehicle, but not across the rear.

Figure (a)

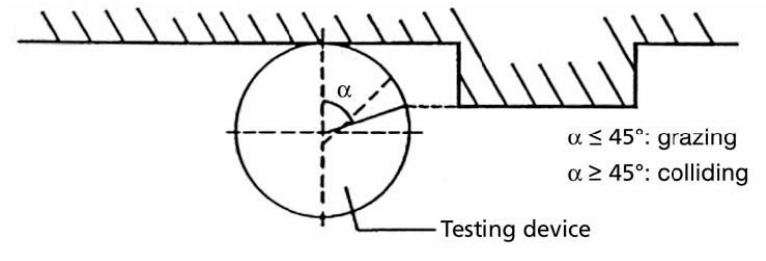

Figure (b)

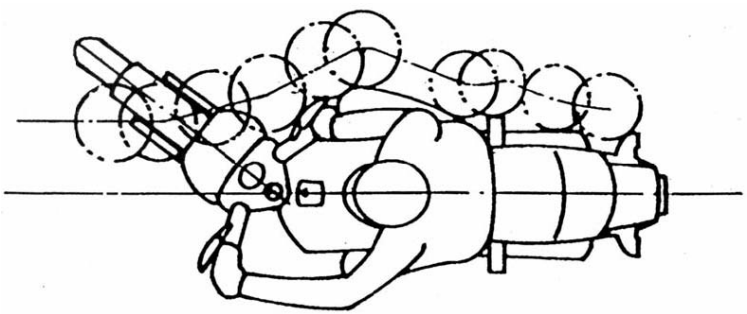

Record of Revision

Revision	Date	Change
1	June 2005	R&P 1 amended.
2	August 2014	Note added to R&P 2.
3	September 2022	Pedal exemption clarified.
4	15/04/2025	Section format revised. Added description of testing device.
5	15/09/2025	Annex 1 incorporated into Section and referenced from RS 6 & RS 7.

This page intentionally left blank.

09 External Projections – Bodied Vehicles

Application: All 3 and 4 wheeled bodied vehicles.

Method of Inspection	Required Standard
This check **does not** apply to aerials, outside rear-view mirrors, luggage carriers on any vehicle and **any** projections behind the rear bulkhead on goods vehicles. Unless otherwise specified in **Standards 4-21**, this examination will apply to all external projections that are contactable by a 100mm sphere on the outer surface of the vehicle above the floor line to a height of 2m above the ground. The floor line is determined by the use of a 30° half angle cone. The cone must be successively positioned around the vehicle in such a way as it contacts, as low as possible, the external surface of the body work (see diagram at **Annex 1**). The floor line is therefore a theoretical line drawn between these contact points. The gaps of wheel arches are assumed to be filled by an imaginary surface forming a smooth continuation of the surrounding external surface. Jacking points and wheels are not taken into consideration as they have their own requirements. This check must be conducted with the wheels in the straight-ahead position only. Exposed engines, exhaust, steering suspension, and brake components on vehicles fitted with 'cycle wing' mudguards must be checked from the front only. If the extent of a projection from a panel cannot be determined by a simple measurement, it must be determined by the maximum variation in the distance between the centre of a 100mm diameter sphere and	**1.** All hard parts on the external surface must have a radius of curvature of at least 2.5mm. **2.** All projections less than or equal to 5mm in height from the external surface must have a blunted edge. **3.** All projections more than 5mm in height from the external surface must have a radius of curvature of at least 2.5mm. **The criteria of Standards 1-3 does not apply to the following items which must be checked to their individual specific requirements:** **4.** A mascot, emblem or other ornamental object must retract or detach when a reasonable force is applied and leave a base or mounting free from sharp edges that does not protrude from the surface by more than 10mm. **5.** Any projecting peak and headlamp surround: a) must not project more than 30mm from the outer surface of the headlamp. b) must have a radius of curvature of at least 2.5mm. **6.** Any windscreen and headlamp wiper and washer system component must have a blunted edge.

Method of Inspection	Required Standard
the nominal line of the panel when the sphere is moved (whilst remaining in constant contact) with that projection (see diagram below). 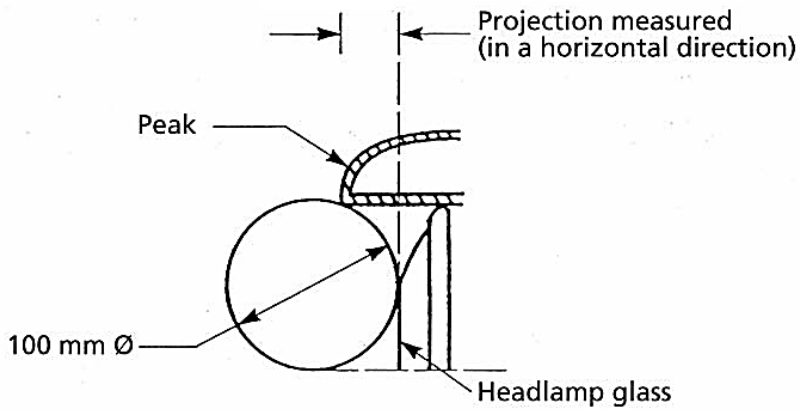 Protruding parts of the external surface, made from a material of hardness not exceeding 60 Shore A, offering a degree of protection may have a curvature of less than 2.5mm. If an item is modified to meet this requirement, the item must be assessed against known materials, methods of manufacture and attachment of such materials likely to be used by a manufacturer of mass-produced vehicles. The materials and methods used may be acceptable if they are permanent and durable. For example, household pipe lagging, etc., would be considered unacceptable. **Note 1:** Devices mounted to the bumpers must meet any requirements applicable contained in any part of this section of the manual.	**7.** Any bumper (if fitted) must have edges turned down and toward the external surface of the body work (see **Note 1**). **8.** Sheet metal edges must be folded back upon themselves by 180°. **9.** Side air and rain deflectors and window dirt deflectors must have a radius of curvature of at least 1mm on outward protruding edges. **10.** Wheels, hub caps, and wheel discs must not be fitted with “spinners”, fin shaped devices, or wing nuts. **11.** No part of the wheel, located above the horizontal plane passing through the axis of rotation (other than in the case of tyres, wheel discs and central wheel securing nuts which have separate requirements at RS12 below) must project outside the body plan form. **12.** Any wheel disc or central securing nut that projects outside the body plan form must: a) not protrude more than 30mm beyond the body plan form. b) have a radius of curvature of at least 30mm. **13.** Handles, hinges, push buttons, and fuel tank filler caps must not project more than: a) 50mm from the external surface.

Method of Inspection	Required Standard
Figure 1 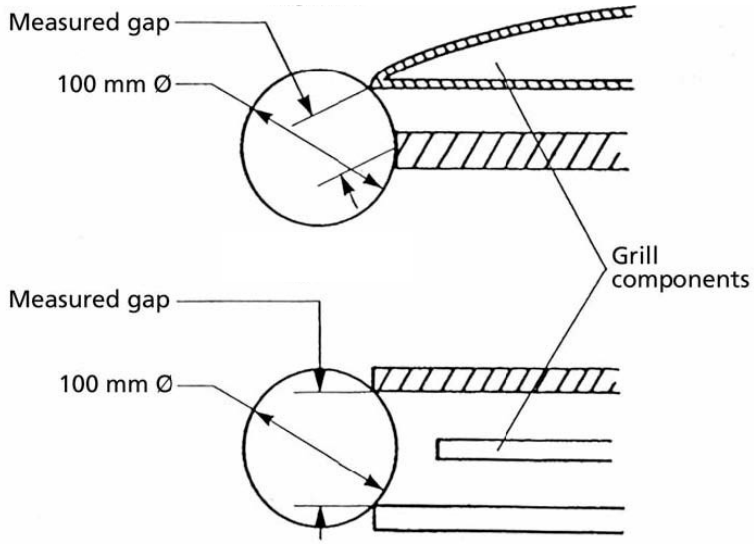 	b) 40mm from the external surface if any part projects beyond the extreme outer edge of the vehicle. **14.** The open end of any door handle that rotates parallel to the door must: a) be directed inwards towards the door. b) be directed rearward, unless the handle(s) cannot under any circumstances project beyond the extreme outer edge of the vehicle and, at least one of the following requirements is met: • the open end of the handle is shielded towards the front by a protective surround, or • the open end of the handle is recessed into the vehicle body work, or • the handle has a gap of less than 2mm measured between the handle and the body work with the handle in its normal position and the door latched. **15.** A door handle that pivots outwards in any direction, and has open ends must: a) face either rearwards or downwards, or b) have an automatic return mechanism where if that fails, it does not allow the handle to project more than 15mm. **16.** The edge of any grill component or gap (see **Figure 1**) must: a) have a radius of curvature of at least 2.5mm if the gap exceeds 40mm.

Method of Inspection	Required Standard
	b) have a radius of curvature of at least 1mm if the gap is between 25mm and 40mm. c) have blunted edges if the gap is less than 25mm. **17.** Any window which opens outwards from the external surface of the vehicle must: a) not have a forward-facing exposed edge. b) not project beyond the extreme outer edge of the vehicle. **18.** Jacking brackets must not project more than 10mm beyond the floor line directly above. **19.** Exhaust pipes, where the tailpipe projects more than 10mm beyond the floor line directly above it, must terminate with a radius of curvature of not less than 2.5mm. **20.** All fixing holes and recesses less than 12mm diameter must have a blunted edge. **Goods Vehicles only** **21.** Bonnet locking grips must not project more than 70mm from the external surface.

Annex 1 - Determination of ‘Floor Line’

Position the vehicle on a level surface.

Place a cone having a 30˚ half angle (or cone segment) on the ground such that the conical surface is touching the outer surface of the vehicle to establish a ‘contact point’.

Reposition the cone at various locations depending on variations in vehicle shape/contour around the vehicle to establish a series of ‘contact points’.

The floor line is the theoretical line connecting the established ‘contact points’.

Note: Jacking brackets, exhaust tailpipe protrusions from under the body and wheels are not considered when assessing the floor line and it should be assumed that wheel arches are filled in.

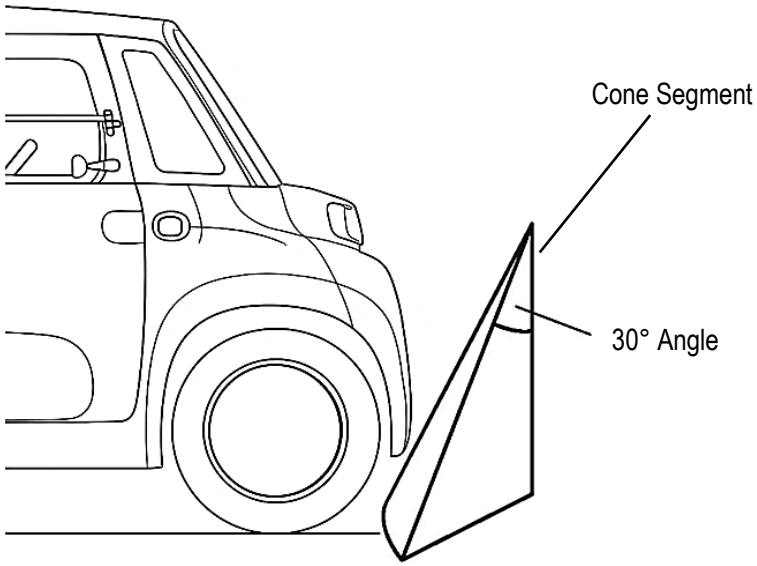

Record of Revision

Revision	Date	Change
1	August 2014	R&P/RfR 12. a) wording amended.
2	15/04/2025	Section format revised.
3	15/09/2025	Annex 1 – Determination of ‘Floor Line’ incorporated into Section and referenced from MoI. Illustration revised.

10 Rear Registration Plate Space

Application: All vehicles except 250W LPM.

Method of Inspection	Required Standard
Check that there is provision for a space at the most practicable rearmost point of the vehicle for mounting a rearward facing rear registration plate, or plates. Where the most practicable rearmost point for mounting the number plate is a ‘side mount’ position check a duplicate space is fitted to the opposite side of the vehicle. This is to comply with visibility requirements for rear registration plates.	**1.** There must be provision for a space at the rearmost practicable point of the vehicle for mounting a rearward facing rear registration plate or plates.

Record of Revision

Revision	Date	Change
1	June 2005	Application clarified, note added to R&P.
2	June 2010	R&P/RfR clarified.
3	January 2019	Application amended.
4	15/04/2025	Section format revised.

11 Handholds

Application: All two-wheel vehicles where provision is made for the carriage of a passenger.

Method of Inspection	Required Standard
Where provision is made for the carriage of a passenger, this must be in the form of a passenger seat. It does not include sidecars. There is no requirement to check that foot pegs are fitted.	**1.** A passenger handhold system comprising of a strap, or a hand grip, or hand grips must be fitted. **2.** Where fitted, a single hand grip must be fitted symmetrically across the centre line of the vehicle. **3.** Where fitted, twin hand grips must be on each side of the vehicle, symmetrically. **4.** Any required strap or handhold must be: a) present. b) securely attached to the vehicle. c) capable of withstanding the forces it is likely to be subjected to under normal use. d) fitted in such a way that it can be easily used by the passenger.

Record of Revision

Revision	Date	Change
1	August 2003	
2	15/04/2025	Section format revised.

12 Headlamp Pattern – Unbodied Vehicles

Application: This examination applies to all obligatory dipped beam headlamps fitted to unbodied vehicles.

Method of Inspection	Required Standard
This examination can be carried out using the aiming screen or an approved headlight beam setter. The beam pattern must be met without the use of masks or beam converters unless they are an integral part of the headlamp as it was approved. Devices or materials applied to the inside of a headlamp which were not present at the time of approval are unacceptable. Headlamps may be marked with an approval mark showing the rule of the road for which the headlamp is approved. The main approvals are usually UN ECE Regulations 112 (asymmetrical dipped beam) and 113 (symmetrical). Headlamps with asymmetrical dipped beams (kick-up) designed specifically for left hand rule of the road traffic will be marked with a single headed arrow pointing to the right when viewed from in front of the vehicle (i.e., pointing to the nearside kerb). If the kick up can be adjusted for either rule of the road the lamp will be marked with a double headed arrow. Headlamps with symmetrical dipped beam (flat top) will be marked with a double headed arrow. Horizontal aim adjustment relates to the left/right positioning of the beam image. For an asymmetrical dipped beam, this allows the kick-up to be positioned correctly. Where the dipped beam pattern is symmetrical (“flat top”), there is no asymmetrical feature to align and therefore no requirement to check for horizontal aim adjustment.	**1.** A dipped beam headlight pattern must not: a) show an offside, right-hand ‘kick-up’. b) dip to the right. c) dazzle. **2.** Any headlamp must have a method for adjusting the: a) vertical aim. b) horizontal aim (where the lamp does not move with the steering) (see **Note 1**). **3.** The headlamp beam pattern must not be met with the use of a mask or converter that was not present at the time of approval.

Method of Inspection	Required Standard
Example markings are shown below. These approval marks can be used as an aid to identify acceptable headlamps; however, the dipped beam pattern should still be checked for compliance. 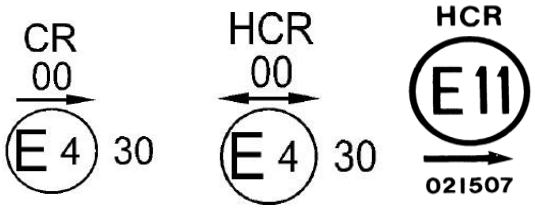 **Example of a left hand rule of the road approval mark with single headed arrow.** **Note 1:** There is no requirement for a means of horizontal aim adjustment where the dipped beam pattern is symmetrical (“flat top”).	

Record of Revision

Revision	Date	Change
1	June 2005	R&P/RfR 1. a) amended, note added to R&P 2. b)
2	June 2010	Application title added, use of beam setter added, approval marking information added.
3	15/04/2025	Section format revised.
4	06/11/2026	MoI updated to clarify horizontal aim adjustment requirements for symmetrical ("flat top") dipped beam patterns and horizontal aim exemption for symmetrical beam patterns clarified in new Note 1.

This page left intentionally blank.

13 Headlamp Aim – Bodied Vehicles

Application: This examination applies to all obligatory headlamps fitted to bodied vehicles.

Method of Inspection	Required Standard
This examination must be carried out using an approved headlight alignment tester. Align the headlamp aim testing equipment to the vehicle in accordance with the manufacturer's instructions. With an assistant seated in the driver's seat, check the alignment of each headlamp in association with the appropriate criteria. The alignment must be met without the use of masks or beam converters unless they are an integral part of the headlamp as it was approved. Devices or materials applied to the inside of a headlamp which were not present at the time of approval are unacceptable. An alternative headlamp dipped beam pattern is acceptable providing all of the beam upper edge is, including any peak, contained within the appropriate tolerance band.	**Headlamp Aim** **European Type (checked on dipped beam)** **1.** The beam image 'kickup' must not be to the offside. **2.** For headlamps with centres **not more than** 850mm from the ground, the beam image horizontal cut-off must be between the horizontal 0.5% and 2% lines, i.e., the **red** tolerance band. **3.** For headlamps with centres **more than** 850mm from the ground, the beam image horizontal cut-off must be between the horizontal 1.25% and 2.75% lines, i.e., the **blue** tolerance band. **4.** The beam image 'break point' must not be to the right of the 0% vertical line, or to the left of the vertical 2% line. **5.** The headlamp beam pattern must not be met with the use of a mask or converter that was not present at the time of approval. **British American (checked on main beam)** **6.** The 'hot spot' centre must not be above the horizontal 0% line. **7.** The 'hot spot' centre must not be to the right of the vertical 0% line, or the left of the vertical 2% line. **8.** For headlamps where the centre is not more than 850mm from the ground, the 'hot spot' centre must not be below the horizontal 2% line.

Method of Inspection	Required Standard
	9. For headlamps where the centre is more than 850mm from the ground, the 'hot spot' centre must not be below the horizontal 2.75% line. **10.** The headlamp beam pattern must not be met with the use of a mask or converter that was not present at the time of approval.

European Type Headlamp (Checked on Dipped Beam)

Check the position of the 'break point'
and horizontal cut-off.

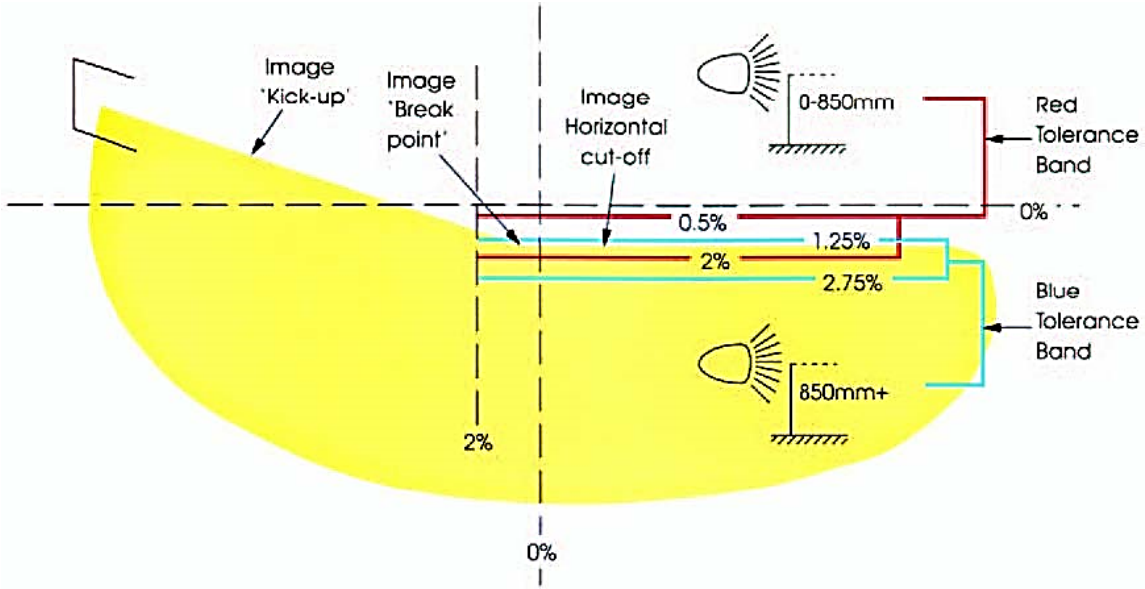

Headlamp Aim – Bodied Vehicles 13

Characteristics:

(a) an asymmetric dipped beam pattern with:

- a distinctive horizontal cut-off on the right, and
- a 15-degree wedge of light above the horizontal (the ‘Kickup’) towards the left

(b) a lens with one or more asymmetric stepped patterns moulded in the glass

(c) a lens may carry

- a European approval mark a circle containing an ‘E’ and a number,

or

- a rectangle containing an ‘e’ and a number

The European approval mark should incorporate a single or double-headed arrow.

A dip beam is denoted by either:

- a capital letter ‘C’ above a capital ‘E’
- a capital letter ‘C’ above an ‘e’

British American Headlamps (Checked on Main Beam)

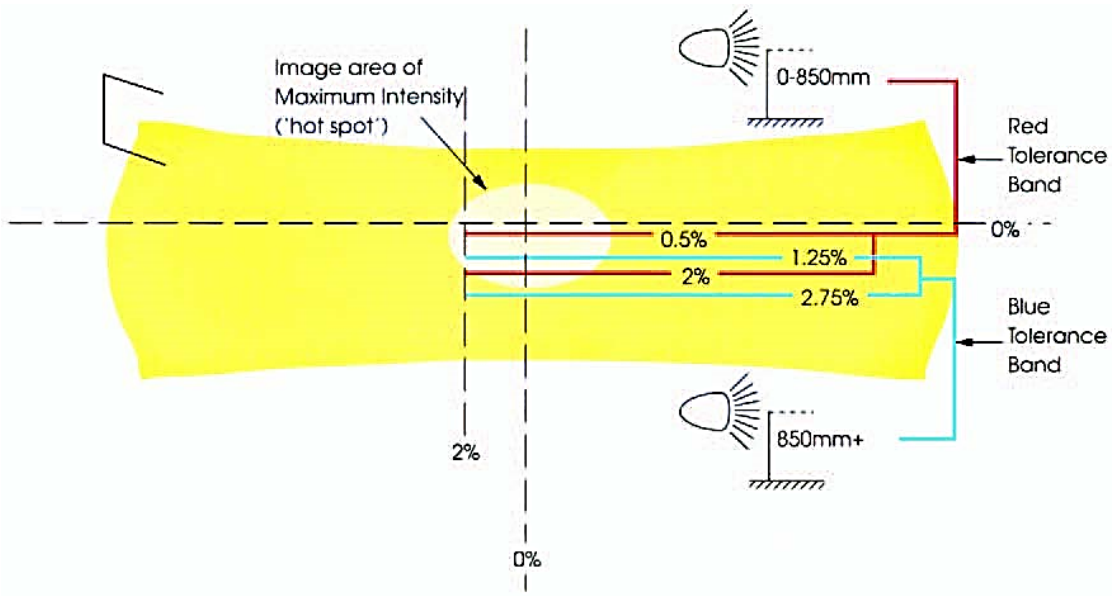

Check the position of the centre of the area of maximum intensity ('hot spot')

Characteristics:

(a) headlamps tested on main beam have a symmetrical main beam pattern with a central area of maximum intensity (hot spot).

(b) this type of lamp generally has a circular lens which may be marked with a figure '1' followed by an arrow indicating the direction of dip.

Record of Revision

Revision	Date	Change
1	15/04/2025	Section revised.
2	06/11/2026	Headlamp aim tolerance requirements clarified at RS 3.

This page left intentionally blank.

14 Design and Construction

Application: All vehicles, unless specifically exempted.

Method of Inspection	Required Standard
This section **does not apply** to any specific subject covered in other sections of this Manual. The following section assesses the vehicles suitability for use under all normal operating conditions, including when the vehicle is fully laden. Consideration must be given to the loadings imposed during acceleration, braking, and cornering. Assess the ability of the component to withstand the forces and vibration to which it is likely to be subjected. The vehicle must at all times present no danger to the occupants or other road users. There are no requirements that make the fitting of a final drive chain/belt guard compulsory. However, where any chain or belt run operates above an imaginary line running parallel to the ground and tangent to the top of either wheel rim (depending on which wheel is driven) the belt/chain must be fitted with a guard such that persons either on or off the vehicle cannot contact the belt/chain. The upper drive sprocket/pulley should be fully enclosed to prevent entrapment between chain and sprocket or belt and pulley. Open primary drives will require a guard protecting the side to prevent injury from protruding bolts and/or entrapment between the belt and pulleys. The belt run need not be covered; however, a presenter must be advised that although a machine without a guard can pass an MSVA examination, it may still contravene C&U Regulation 100(1) (Maintenance and use of vehicle so as not to be a danger etc.) which states (abbreviated): *A motor vehicle and all parts and accessories of such vehicle shall at all times be in such condition that no danger is caused or likely to be caused to any person in or on the vehicle or on a road.*	**1.** All aspects of the design and construction of the vehicle must be such that no immediate danger is caused or likely to be caused to its driver, passengers, or any other road users or pedestrians. **2.** A vehicle structure or assembly component: a) must be of adequate strength and not be likely to fail prematurely. b) welded joint(s) must be of adequate strength and not be likely to fail prematurely. c) must be designed so that it is not likely to affect the steering, handling, or braking of the vehicle. **3.** A body or body part: a) must not be insecure b) must be of adequate strength and not likely to fail prematurely. c) attachment or securing method must be of adequate strength and not be likely to fail prematurely. **4.** Any subframe/mounting/attachment bracket must: a) be secure.

Method of Inspection	Required Standard
Note 1: It is possible for a scooter to have the engine/drive train mounted on the suspension and certain components may be designed to foul against others. Examiners must take this into consideration when carrying out this check. **Note 2**: Electrical cabling must be routed to prevent damage to the insulation and, unless contained in a hollow component, secured at a maximum of 300mm (12 inches) intervals.	b) be of adequate strength and not be likely to fail prematurely. **5.** Any wheel, axle, stub axle, spindle, suspension unit, drive train component and/or its fixing must (see **Note 1**): a) be of adequate strength and not be likely to fail prematurely. b) be secure. c) be compatible with its mounting/securing arrangement. d) not be likely to foul other parts of the vehicle. **6.** Any fixing/locking/retaining device must be: a) present. b) secure. c) of adequate strength and not be likely to fail prematurely. **7.** Any fuel system components must: a) not be leaking. b) be secure. c) not foul moving parts of the vehicle. d) not be positioned near to a heat source where a leak will cause a fire hazard.

Method of Inspection	Required Standard
	e) not be subject to a corrosive environment likely to cause premature failure. f) be suitable, by design, to adequately carry out the function for which they are fitted. **8.** A fuel filler cap must: a) be fitted b) be positively secured. c) incorporate an adequate sealing arrangement. **9.** Any electrical components must: a) be secure. b) not have exposed conductor material where operation would result in a potential short circuit. c) be of adequate capacity. d) not be positioned in such a way that would cause a fire hazard. **10.** Any cable or wire must (see **Note 2**): a) be securely fixed to the vehicle. b) not have exposed conductor material where operation would result in a potential short circuit. c) have insulation that is not likely to be damaged by heat.

Method of Inspection	Required Standard
	d) not be chafing or likely to chafe. e) be of adequate capacity. **11.** A driver's or passenger door must: a) be capable of being securely latched in the closed position. b) not be likely to easily burst open. **12.** Any door handle/control must be easily accessible from the adjacent seating position. **13.** Any aperture cover must be capable of being securely latched in the closed position. **14.** Any door or aperture edge must be blunted. **15.** For vehicles with **motorcycle type steering only:** a) any fouling between components must not interfere with the free movement of the steering from lock to lock. b) the handlebars/grips must not contact a fixed part of the machine. c) with the engine running, there must not be a restriction to the handlebars caused by any cables being pulled taut, becoming trapped or by being caught on a projection. d) a steering damper must be secure and fitted in such a way that the steering action is not impaired.

Method of Inspection	Required Standard
	e) any fairing, leg shield or body part must be secure and not be likely to impede the steering. f) there must not be any likelihood of fouling between any components under normal operating conditions. **Quadricycles and 3 wheeled vehicles with 2 front (car type) steered wheels** **16.** Any wheel, tyre, transmission/braking component which rotates during vehicle operation, and any steering component must: a) not foul on another component. b) not be likely to foul under normal operating conditions.

Record of Revision

Revision	Date	Change
1	August 2005	Note added to R&P 1 relating to chain guards.
2	June 2010	Note in R&P 1 expanded to cover unconventional chain runs.
3	January 2019	R&P, RfF alignment corrected.
4	15/04/2025	Section revised.

15 Tyres

Application: All vehicles.

Method of Inspection	Required Standard
This section does not apply to Low Power Mopeds with the exception of Standard 7. **Arrangement of motorcycle tyre markings** For example, a motorcycle tyre showing the markings 100/80 B 18 53 S: - 100/80-18 will indicate nominal size - 53 will indicate a load capacity of 206kg - see list in Annex 1 - S will indicate a maximum speed of 180kmh/112mph – see list in Annex 2 - B indicates bias belted. Radial tyres will display an R, and cross ply tyres will display a D or a **–** (dash) Combinations, Tricycles and Quadricycles may be fitted with car tyres. Some tyres might be described as being of 'Breaker' construction. These tyres are a variation on cross-ply and should be treated as such. **Example arrangement of an approval marking** **E11 75R – 002439**	**1.** Each tyre must be moulded so that it permanently displays the following information (see **Note 1**): a) "E" or "e," JIS (Japanese) or DOT (American) or BSAU 144 (car remould tyres) approval marking (see **Notes 3, 4, & 5**). b) nominal size. c) load capacity. d) speed capability. e) type of construction (e.g. Radial). **2.** Each tyre (see **Note 2**): a) must be of the correct nominal size for the wheel to which it is fitted. b) must have the correct load capacity for the maximum permitted weight for the axle to which it is fitted. c) must have the correct speed capability for the maximum design speed of the vehicle. d) must be fitted in accordance with the manufacturer's instructions marked on the sidewall(s). (see **Note 6**).

Method of Inspection	Required Standard
Note 1: Vehicles of categories L1e, L2e and L6e with a technically permissible maximum mass ≤ 150 kg and a tyre section width ≤ 67 mm are not required to have an approval marking, or to be marked with the type of construction. **Note 2:** Where the suitability of a tyre for the vehicle cannot be determined from the tyre markings alone, documentary evidence from the tyre or vehicle manufacturer may be requested to support assessment of the tyre's suitability for the vehicle's maximum design speed and maximum axle loads. **Note 3**: DOT approval is only acceptable if a service description (load/speed rating) is present. **Note 4**: Motorcycle ‘re-treaded’ tyres do not require approval marks. **Note 5**: There are no requirements for car tyres displaying “VR” or “ZR” to display a load index or speed rating, so documentary evidence may be required from the presenter/manufacturer. See explanatory notes at Annex 2. **Note 6**: Directional tyres must be fitted in accordance with the instructions on the sidewall. The direction of forward rotation is indicated by an arrow, words, or both. Single asymmetric tread tyres are not acceptable on a trike single wheel axle as fitment inside/outside is not applicable. A tyre specifically designed for front wheel use must not be fitted to the rear wheel, or vice versa. **Note 7**: Examples of an unacceptable mix of tyre structures such as: (i) a cross ply or bias belted tyre fitted on the rear axle and a radial tyre fitted on the front axle. (ii) a cross ply tyre fitted on the rear axle and a bias belted tyre fitted on the front axle.	**3.** All tyres on the same axle must have the same: a) structure (e.g., bias-belted, cross ply, or radial) (see **Note 7**). b) nominal size. c) aspect ratio. **4.** Tyres must be of the correct structure, taking account of their position on the vehicle and the vehicle axle configuration. **5.** Sidecar or car tyres must not be fitted to a solo machine. **6.** Tyres must not be designated by their manufacturer as unsuitable for road use (e.g., Racing tyres or those marked NHS or NOT FOR HIGHWAY USE) (see **Note 8**). **Low powered mopeds only** **7.** The tyres must be appropriate for the use of the machine.

Method of Inspection	Required Standard
Note 8: A tyre which has NHS or similar markings will be deemed acceptable if it is approved to a UN ECE Regulation and has the full UN ECE approval markings. An example of a Regulation 75 (motorcycle tyres) approval is shown above.	

Record of Revision

Revision	Date	Change
1	June 2005	Car tyre use on combinations added.
2	August 2007	R&P/RfR 2. d) amended and note added, note added to R&P 2. i).
3	June 2010	Note added to R&P 1. a).
4	August 2014	Note added to R&P 2. e).
5	January 2019	R&P 2. i) note amended.
6	15/04/2025	New Note 1 linked to RS 1 added to provide exemption for certain vehicle categories with conditions (TSE MSVA 015 007). Remaining Section revised.
7	06/11/2026	New Note 2 referenced from RS 2 and subsequent notes renumbered. New Note 8 referenced from RS 6.

15 Annex 1 - Tyre Load Indices

Load Index (LI)	Single Tyre (kg)	Two Tyres (kg)	Load Index (LI)	Single Tyre (kg)	Two Tyres (kg)
0	45	90	50	190	380
1	46.2	92.4	51	195	390
2	47.5	95	52	200	400
3	48.7	97.4	53	206	412
4	50	100	54	212	424
5	51.5	103	55	218	436
6	53	106	56	224	448
7	54.5	109	57	230	460
8	56	112	58	236	472
9	58	116	59	243	486
10	60	120	60	250	500
11	61.5	123	61	257	514
12	63	126	62	265	530
13	65	130	63	272	544
14	67	134	64	280	560
15	69	138	65	290	580
16	71	142	66	300	600
17	73	146	67	307	614
18	75	150	68	315	630
19	77.5	155	69	325	650
20	80	160	70	335	670
21	82.5	165	71	345	690
22	85	170	72	355	710
23	87.5	175	73	365	730
24	90	180	74	375	750
25	92.5	185	75	387	774
26	95	190	76	400	800
27	97.5	195	77	412	824
28	100	200	78	425	850
29	103	206	79	437	874

Load Index (LI)	Single Tyre (kg)	Two Tyres (kg)	Load Index (LI)	Single Tyre (kg)	Two Tyres (kg)
30	106	212	80	450	900
31	109	218	81	462	924
32	112	224	82	475	950
33	115	230	83	487	974
34	118	236	84	500	1000
35	121	242	85	515	1030
36	125	250	86	530	1060
37	128	256	87	545	1090
38	132	264	88	560	1120
39	136	272	89	580	1160
40	140	280	90	600	1200
41	145	290	91	615	1230
42	150	300	92	630	1260
43	155	310	93	650	1300
44	160	320	94	670	1340
45	165	330	95	690	1380
46	170	340	96	710	1420
47	175	350	97	730	1460
48	180	360	98	750	1500
49	185	370	99	775	1550

Record of Revision

Revision	Date	Change
1	June 2005	Note removed.

This page left intentionally blank.

15 Annex 2 – Speed Categories

Appendix 1 - Motorcycle Tyres

The service description (load index and speed symbol) indicates the speed limit of the tyre **except where the service description is marked within brackets**. Speed limit means the maximum speed of which the motorcycle is capable. See Table 1 for speed limits for each speed symbol.

Tyres suitable for speeds in excess of 149 mph (240 km/h) are identified by the letter “V” or “Z” placed within the tyre size designation in front of the tyre structure indication, e.g., 150/80VB16 or 180/55ZR17.

Speed category “V,” “VB” or “VR” tyres suitable for speeds over 149 mph (240 km/h) will be marked with a service description within brackets where the speed symbol is “V” e.g., 120/60VR17 (55V). It is recommended that these tyres do not exceed 168 mph, therefore any vehicle fitted with these tyres where the declared maximum speed of the vehicle exceeds 168 mph will require documentary evidence of the tyres’ suitability.

Speed category “ZB” or “ZR” tyres suitable for speeds up to 168 mph (270 km/h) will be marked with a service description where the speed symbol is “W” e.g., 120/60ZR17 55W. If they are suitable for speeds over 168 mph the service description will be marked within brackets e.g., 120/60ZR17 (55W).

Table 1

Speed Category Symbol	Relevant Speed (km/h)	Relevant Speed (mph)
B	50	31
F	80	50
G	90	56
J	100	62
K	110	68
L	120	75
M	130	81
N	140	87
P	150	93
Q	160	99

Speed Category Symbol	Relevant Speed (km/h)	Relevant Speed (mph)
R	170	106
S	180	112
T	190	118
U	200	124
H	210	130
V	240	149
W	270	168

Load Capacities and Speed Limits

For speeds above 81 mph but not exceeding 130 mph the calculated maximum axle load must not exceed the value associated with the relevant load index as shown in Annex 1.

For speeds lower than or equal to 81 mph the calculated maximum axle load must not exceed the percentage of the value associated with the relevant load index as shown in Table 2 with reference to the speed symbol and to the maximum speed capability of the vehicle. **This only applies to "E" or "e" approved tyres.**

Table 2

Max. Speed (mph)	Variation in Load Carrying Capacity (%)						
	Moped	Speed Symbol					
	B	J	K	L	M	N	P and above
19	130	130	130	130	130	130	130
31	**100**	130	130	130	130	130	130
38		123	123	123	123	123	123
44		116	116	116	116	116	116
50		110	110	110	110	110	114

Max. Speed (mph)	Variation in Load Carrying Capacity (%)						
	Moped	Speed Symbol					
	B	J	K	L	M	N	P and above
56		105	105	107.5	107.5	107.5	112
62		**100**	100	105.0	105.0	105.0	110
68			**100**	102.5	102.5	102.5	108
75				**100**	100	100	106
81					**100**	100	104
87						**100**	100
100 (bold) is the maximum speed permitted for the relevant speed symbol							

Example

A Chinese 125cc commuter motorcycle is fitted with a **2.75-17 41L** front tyre and a **3.00-17 50L** rear.

The declared maximum speed is **60 mph**.

The calculated axle weights are **72.25kg** for the front and **197.93kg** for the rear.

The speed capability of both tyres is acceptable (**L** equates to a max speed of **75 mph**) as is the maximum load capacity of the front tyre (**41** equals **145kg** max).

From the table in Annex 1 the maximum load for a **50** rated tyre is **190kg**.

This is insufficient for the calculated rear axle load, but from table 2, an L speed category tyre fitted to a machine with a max speed of **62 mph** or less is permitted to carry a maximum load of **105%** of its rated load capacity.

This means that the permitted maximum load in this example is **190kg x 105%** which equals **199.5kg** (190x1.05).

The tyre would therefore be acceptable.

For speeds above 130 mph but not exceeding 168 mph the calculated maximum axle load must not exceed the percentages of the load capacity as shown in table 3.

Table 3

Max Speed (mph)	Variation in Load Carrying Capacity (%)			
	Speed Symbol			
	H	V		W
130	100	100	100	100
137		95	95	100
143		90	90	100
149		85	85	100
155			80 (1)	95
161			75 (1)	85
168			70 (1)	75
(1) Only applicable to tyres with speed category markings V VB or VR				

For speeds in excess of 168 mph further reduce the load capacity by 10% for every 6 mph speed step.

Appendix 2 - Car Tyres

Car tyres may be fitted to trikes, quads, and motorcycle/sidecar combinations.

On radial tyres suitable for higher speeds, the letter ‘R’ in the tyre designation (placed in front of the rim diameter) may be replaced by ‘VR’ or ‘ZR’, e.g., 205/55ZR16.

Tyres marked ‘VR’ are suitable for speeds of at least 130mph. Tyres marked ‘ZR’ are suitable for speeds of at least 149mph.

Tyres displaying the ‘VR’ or ‘ZR’ marking may not always display a Max load capacity, Load index, or Speed rating.

If a **car** tyre max load capacity or speed rating is not displayed, documentary evidence of its capabilities will be required unless the examiner has prior knowledge the tyre is acceptable.

If a tyre max load capacity is displayed and is suitable, but there is no speed rating letter other than ‘VR’ or ‘ZR’, documentary evidence of the tyre speed rating is only necessary if the vehicle maximum road speed is in excess of 130mph (in the case of a ‘VR’ tyre) or 149mph (in the case of a ‘ZR’ tyre). (‘VR’ and ‘ZR’ are minimum speed ranges, whereas speed rating letters [V, W, Y] give the maximum speed capability).

Table 4

For speeds not exceeding 130mph

Speed Category Symbol	Corresponding Speed	
	Km/h	mph
B	50	31
C	60	38
D	65	41
E	70	44
F	80	50
G	90	56
J	100	62
K	110	68
L	120	75
M	130	81
N	140	87
P	150	93
Q	160	99
R	170	106
S	180	112
T	190	118
U	200	124
H	210	130
V	240	149 – see table 5
W	270	168 – see table 6
Y	300	186 – see table 7

The tables below show the allowance of a reduction in load against speed for those tyres displaying V, W and Y speed category symbols. Z (ZR) marked tyres are suitable for speeds in excess of 149mph (240kph) and a tyre may display a Z marking in place of a W or Y.

A tyre displaying a V speed category symbol with a load capacity of 42 will only be classified to a speed of 130mph at a load of 150kg. However, using the table(s) below it is possible for a tyre displaying a V category symbol to be fitted to a vehicle with a declared speed of 143mph as long as the calculated load (machine axle weight plus rider) does not exceed a load of 141kg. (150kg x 94%).

Table 5

For speeds higher than 130mph but not exceeding 149mph (speed category V)

Maximum Speed		Load
km/h	mph	%
215	134	98.5
220	137	97
225	140	95.5
230	143	94
235	146	92.5
240	149	91

Table 6

For speeds higher than149mph but not exceeding 168mph (speed category W)

Maximum Speed		Load (%)
km/h	mph	
240	149	100
250	155	95
260	162	90
270	168	85

Table 7

For speeds higher than168mph but not exceeding 186mph (speed category Y)

Maximum Speed		Load (%)
km/h	mph	
270	168	100
280	174	95
290	180	90
300	186	85

Appendix 3 – Commercial Vehicle Tyres

Commercial vehicle tyres are those with the letter C or the letters LT placed after the tyre size designation. These tyres have a variation of load capacity with speed as detailed in the table below.

Max Speed (km/h = mph)	Variation in Load Carrying Capacity C & LT Tyres (%)							
	All Load Indices ≤121							
	Speed Category Symbol							
	F	G	J	K	L	M	N	P and above
45 = 28	113	113	113	113	122	122	122	122
50 = 31	112	112	112	112	120	120	120	120
55 = 34	111	111	111	111	117.5	117.5	117.5	117.5
60 = 37	110	110	110	110	115	115	115	115
65 = 40	107.5	108.5	108.5	108.5	113.5	113.5	113.5	113.5
70 = 43	105	107	107	107	112.5	112.5	112.5	112.5
75 = 46	102.5	105.5	105.5	105.5	111	111	111	111

Max Speed (km/h = mph)	Variation in Load Carrying Capacity C & LT Tyres (%)							
	All Load Indices ≤121							
	Speed Category Symbol							
	F	G	J	K	L	M	N	P and above
80 = 50	100	104	104	104	110	110	110	110
85 = 53		102	103	103	108.5	108.5	108.5	108.5
90 = 56		100	102	102	107.5	107.5	107.5	107.5
95 = 59			101	101	106.5	106.5	106.5	106.5
100 = 62			100	100	105	105	105	105
105 = 65					103.75	103.75	103.75	103.75
110 = 68					102.5	102.5	102.5	102.5
115 = 71					101.25	101.25	101.25	101.25
120 = 74					100	100	100	100

Record of Revision

Revision	Date	Change
1	June 2005	Expanded into separate appendices for bike and car tyres
2	June 2010	Appendix 3 added.

This page left intentionally blank.

16 Brakes

Application: All vehicles.

Method of Inspection	Required Standard
Light quadricycles will need to meet the requirements for 3-wheel mopeds. Heavy quadricycles will need to meet the requirements for tricycles. All low power mopeds can have pushbike calliper brakes (rim brakes) and need to meet the requirements of 2 wheeled vehicles. It is acceptable if a braking device operates on more than the required wheel. Braking system components include but are not limited to discs, drums, back plates, callipers, mounting brackets, linkages, pivots, bushes, fixing cables, levers, pedals, locking devices, bias-bars, etc. Assess the capability of the brake friction surfaces, without dismantling, to dissipate energy sufficiently to maintain the brake performance under all conditions, including long descents, without the occurrence of 'brake fade'. The braking devices must act on brake surfaces permanently connected to the wheels either rigidly or through components unlikely to fail. A chain is considered to be a component likely to fail, as are sprockets. Automatic transmission "Park" position engagement is not acceptable as a parking brake. There is no requirement for a parking brake to be fitted to a combination. A motorcycle and sidecar combination does not need to be fitted with	**1.** A **two wheeled** vehicle must be equipped with: a) one independently controlled service braking device acting on the front wheel, **and** b) one independently controlled service braking device acting on the rear wheel. **2.** A **three wheeled** moped must be equipped with either (see **Note 1**): a) two independent service braking devices, which together operate the brakes on all the wheels, **or** b) a single line service braking device which operates the brakes on all wheels, **and** c) a secondary (emergency) braking device (that may be the parking brake), **or** d) a dual/tandem service braking device which operates the brakes on all wheels; **and in addition to any of the above** e) a parking brake device that operates on at least one wheel. **3.** A **motorcycle tricycle** or **motorcycle quadricycle** must be equipped with either (see **Note 2**):

Method of Inspection	Required Standard
a brake on the sidecar wheel unless the braking performance cannot be met. **Note 1**: Acceptable combinations are: a) & e) **or** b), c) & e) **or** d) & e). **Note 2**: Acceptable combinations are: a) & e) **or** b), c) & e) **or** d) & e). **Note 3**: Braided stainless steel brake lines with aluminium end fittings are not deemed to be suitable due to the possibility of unseen electrolytic corrosion. **Note 4**: Vacuum components must be checked with the engine running. **Note 5**: RS12 does not apply to Low Power Mopeds with a maximum speed of up to 25km/h (16 mph). **Note 6**: Easily checked means that the task can be completed by using no more than those tools originally supplied as part of the vehicle equipment. **Note 7**: This assessment must take account of the vehicle's weight, weight distribution, and speed capacity. **Note 8**: In the case of a bias-bar, positively locked.	a) two independent service braking devices fitted, one acting on the front axle/one acting on the rear axle which together operate the brakes on all the wheels, **or** b) a single line service braking device that operates the brakes on all wheels, **and** c) a secondary (emergency) braking device (that may be the parking brake), **or** d) a dual/tandem service braking device which operates the brakes on all wheels. **and in addition to any of the above** e) a parking brake device that operates on the wheels of at least one axle. **4.** Every other **tricycle** or **quadricycle** must be equipped with: a) a **foot-controlled** service brake device, which operates on all wheels, b) a secondary (emergency) brake device (that may be the parking brake, **and** c) a parking brake device, which operates on the wheels of at least one axle. **5.** The service brake system (or systems) must be capable of being operated from the riding or driving position whilst keeping both hands on the steering control. **6.** Where applicable, the secondary braking system must: a) operate progressively.

Method of Inspection	Required Standard
	b) be capable of being applied from the driving position whist keeping one hand on the steering control. **7.** Where applicable, the parking brake system must: a) be capable of being applied from the driving position. b) have a control that is operated independently from any service brake and can be positively locked on. c) be able to be held in the “on” position by purely mechanical means. **8.** A braking system must have: a) an adjustment/compensation ability to compensate for friction material wear. b) sufficient reserve travel. **9.** Any required braking system component must be: a) present, and complete so that it functions correctly. b) secure (see **Note 8**). c) of adequate strength so as not to be likely to fail prematurely. d) by design, suitable to adequately carry out the function for which it is fitted. e) constructed of material sufficiently durable that is unlikely to fail prematurely.

Method of Inspection	Required Standard
	f) unobstructed in its travel. **10.** Any hydraulic, and (where applicable) vacuum brake pipe(s) or hose(s) must: a) not foul other parts. b) not be kinked, stretched, or twisted. c) be adequately secured or supported. d) not be exposed to excessive heat. e) not have unsuitable joint fittings. f) not be made from a clearly unsuitable material (see **Note 3**). **11.** Any hydraulic and (where applicable) vacuum components must (see **Note 4**): a) not be leaking. b) not be situated in a corrosive environment and likely to fail prematurely. **12.** Any hydraulic system reservoir must have provision for the reserve fluid to be easily checked (see **Notes 5 & 6**). **13.** Brake friction surfaces must have sufficient capacity to dissipate heat and prevent fade (see **Note 7**). **14.** If the vehicle is fitted with an anti-lock braking system, an operational warning lamp must be fitted to monitor the system that is visible from the driving position and operates when the anti-lock is energised.

Record of Revision

Revision	Date	Change
1	June 2005	R&P 8 modified, note added to R&P 12.
2	August 2007	Note added to Application.
3	June 2010	Note in Application expanded, clarification added to R&P 2 and 3, R&P/RfR 7. b) expanded, Note added to R&P 10.
4	January 2019	Application clarified.
5	September 2022	Clarification of pushbike calliper type brakes.
6	15/04/2025	Section revised. Requirement for bias-bars added (TSE MSVA 016 007).

This page left intentionally blank.

17 Radio Suppression

Application: All vehicles fitted with a spark ignition engine.

Method of Inspection	Required Standard
Volume production vehicles can be assumed to meet this requirement unless evidence suggests otherwise. Visually check the HT ignition system is fitted with radio interference suppression.	**1.** The HT ignition system must be fitted with radio interference suppression equipment.

Record of Revision

Revision	Date	Change
1	June 2010	Note added to Application.
2	15/04/2025	Section revised.

18 Exhaust System / Noise

Application: This examination applies to all vehicles (excluding electrically powered vehicles).

Method of Inspection	Required Standard
This inspection applies to the exhaust system fitted to the engine which provides the motive power for the vehicle. **Noise Test** Using the sound level meter according to the manufacturer's instructions, carry out a stationary noise check. This check should be carried out after the emissions test. Position the vehicle on an unobstructed open test site (concrete or asphalt) which covers a rectangular area the sides of which are at least 3 metres from the vehicle sides, front, and rear. Ensure the engine is at operating temperature. Using the alignment tool, place the microphone; • at the height of the exhaust outlet, or a height of 200mm, whichever is the higher. • at an angle of 45° to the exhaust outlet in the direction which gives the greatest possible distance between it and the outline of the motorcycle (handlebars excluded), or body contour of a bodied vehicle. • at a distance of 500mm from the exhaust outlet. If the exhaust system has more than one outlet at centres less than 300mm apart, or more than one outlet from a common silencer, the microphone must be faced towards the outlet which is nearest the	**1.** An exhaust system must: a) be complete. b) be fitted with a silencer. c) be secured to the vehicle. d) have mountings that are of adequate strength to support the weight of the system. **2.** The exhaust silencer must have a permanently marked applicable identification mark or plate with (see **Note 1**): a) the manufacturers trade name or mark, **or** b) the EC component approval mark ("e"), **or** c) the UN ECE component approval mark ("E"), **or** d) the British Standard classification BSAU 193/T2, or BS AU 193a 1990/T2, or BS AU 193a 1990/T3. **3.** The level of sound emitted for mopeds, motorcycles and light quadricycles must not be more than: a) 91 dB (A) with an engine capacity of 80cc or less. b) 94 dB (A) with an engine capacity of more than 80cc but not more than 175cc.

Method of Inspection	Required Standard
motorcycle (handlebars excluded), or body contour if bodied vehicle or the highest point above the ground. If the centres of the outlets are more than 300mm apart, separate measurements must be taken for each of them; the highest figure recorded being taken as the test value. 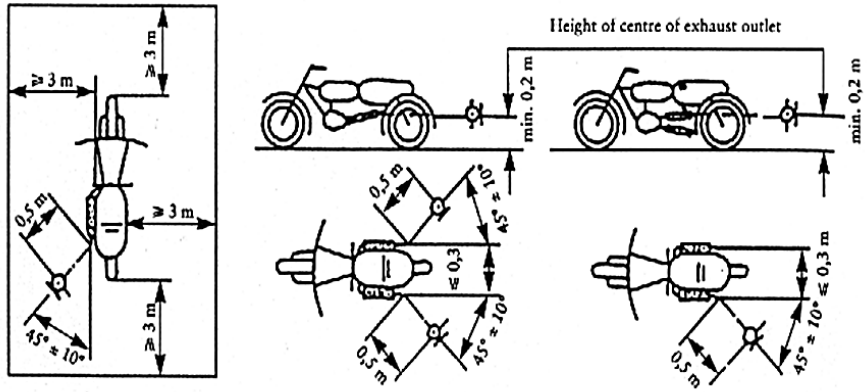 Run the engine at a constant speed of: • ¾ of its maximum power speed if that is less than or equal to 5000rpm, or • ½ of its maximum power speed if that is more than 5000rpm. **Note 1**: Applicable to Two wheeled mopeds and Motorcycles only.	c) 99 dB (A) with an engine capacity of above 175cc. **4.** The level of sound emitted for motor tricycles and heavy quadricycles must not be more than 99 dB (A).

Record of Revision

Revision	Date	Change
1	August 2007	R&P 3 clarified.
2	June 2010	R&P 2 expanded; R&P/RfR 3 modified.
3	15/04/2025	Section revised.

This page left intentionally blank.

19 Exhaust Emissions – Spark Ignition

Application: All vehicles fitted with a spark ignition. Vehicles fitted with rotary engines, vehicles fitted with engines manufactured before 1 January 1993, mopeds (including 3 wheeled mopeds and light quadricycles), & 2-stroke engines are subject to a visual test only.

Method of Inspection

There is no requirement to test alternative or dual fuelled vehicles other than on petrol emissions.

The exhaust emissions must be checked visually and (where applicable) using an approved and calibrated exhaust gas analyser.

If the exhaust system has more than one tailpipe (not connected to a common silencer) the emission check must be carried out on all tail pipes, the average of readings obtained being used to base the result of the test upon.

Emission levels

Vehicle and/or engine type	CO% at idle
Mopeds, 3-wheel mopeds and light quadricycles Vehicles fitted with an engine manufactured pre-1/1/1993 Any vehicle fitted with a rotary engine Any vehicle fitted with a 2-stroke engine	Visual check only
Motorcycles, tricycles, and heavy quadricycles	4.5%

Required Standard

1. The engine:
   a) must be idling at its normal idling speed.
   b) must not emit dense blue or clearly visible black smoke for a continuous period of more than 5 seconds at idle.
   c) must not emit excessive smoke or vapour of any colour during acceleration which would obscure the view of other road users.
2. There must be access to the exhaust tailpipe(s) to allow the insertion of the analyser probe.
3. The exhaust gas must not contain a carbon monoxide (CO) content exceeding the required limits for a continuous period of 5 seconds.

Method of Inspection	Required Standard
Prior to conducting the test, check: • the choke/excess fuel device is not operating • there is sufficient oil/coolant • where possible/applicable the camshaft drive belt for maladjustment, damage, or contamination • the engine is at normal working temperature 1. All vehicles. Run the engine to around 2500rpm or half the maximum engine speed (if lower) for 20 seconds to ensure the engine is purged. Allow the engine to return to idle and assess: a) the idle speed b) the smoke emitted from the tailpipe Rapidly increase the engine speed to around 2500rpm, or half the maximum engine speed if this is lower, and assess: c) the smoke emitted from the tailpipe 2. Check the exhaust tailpipe(s) for shape, accessories/shield, restriction, etc. that prevents the insertion of the meter probe unless it is part of the original manufacture. 3. All vehicles except mopeds, 3-wheel mopeds and light quadricycles, vehicles fitted with pre-1993 engines and 2-stroke engines. Using an exhaust gas analyser and following the manufacturer's instructions determine the proportions of carbon monoxide (CO), over a period of at least 5 seconds at idle.	

Record of Revision

Revision	Date	Change
1	June 2010	Application clarified.
2	15/04/2025	Section revised.
3	06/11/2026	Application, Emissions table and point 3 of MOI revised to include 2-stroke engines (TSE MSVA 019 004).

This page left intentionally blank.

20 Exhaust Emissions – Diesel

Application: All vehicles fitted with a compression ignition (Diesel) engine. Amateur built, rebuilt vehicles, and vehicles manufactured using the parts of a registered vehicle fitted with engines manufactured before 1 January 1993 are subject to a visual test only.

Method of Inspection	Required Standard
Prior to conducting the test, check: • there is sufficient oil/coolant and no indication of low oil pressure. • where possible/applicable the camshaft drive belt for maladjustment, damage, or contamination. • there are no obvious signs of an engine defect, or the governor having been tampered with. • the engine is at normal operating temperature. The metered smoke test must not be carried out if the engine is not in a safe condition to test or is not at operating temperature. If the exhaust system has more than one tailpipe (not connected to a common silencer), the smoke check must be carried out on all tailpipes, the average reading obtained being the reading used to base the result of the test upon. 1. Check the exhaust tailpipe(s) for shape, accessories/shield, restriction, etc. that prevents the insertion of the meter probe unless it is part of the original manufacture. Run the engine at approx. 2500rpm or half maximum engine speed (whichever is the lower) for 30 seconds to purge the system. Raise the engine speed slowly to check the operation of the governor. Return the engine to idle speed. The engine must not be held at governed speed.	**1.** There must be access to the exhaust tailpipe(s) to allow the insertion of the meter probe. **2.** After 6 free accelerations, the mean of the last 3 smoke levels must not exceed: a) $2.5m^{-1}$ for a non-turbocharged engine. b) $3.0m^{-1}$ for a turbocharged engine. **3.** The exhaust must not emit excessive smoke or vapour of any colour to an extent likely to obscure the vision of other road users.

Method of Inspection	Required Standard
Fast Pass a) Using a smoke meter in accordance with the manufacturer's instructions and following the meter prompts, carry out three acceleration tests, operating the accelerator quickly to maximum and when prompted by the meter allowing the engine to return to idle speed. At the end of the 1st acceleration read the smoke level displayed on the meter. If it is at or below 1.50m^{-1}, the vehicle has passed the metered part of the test. (Proceed to RS 3) b) If the average opacity is too high, carry out 2 further accelerations. At the end of the 3rd acceleration read the smoke level displayed on the meter. If it is at or below the appropriate limit, the vehicle has passed the metered part of the test. (Proceed to RS 3) c) If the average opacity is too high, carry out further accelerations up to a maximum of 6 in total. Check the meter reading after each acceleration. If it is at or below the appropriate limit, the vehicle has passed the metered part of the test. If the appropriate limit has not been met after 6 accelerations have been performed, the vehicle has failed the metered smoke check. 3. Assess whether the smoke or vapour emitted, regardless of measured opacity is likely to obscure the vision of other road users.	

Record of Revision

Revision	Date	Change
1	January 2019	Reference to SVA leaflet removed.
2	15/04/2025	Section revised.

This page left intentionally blank.

21 Brake Performance

Application: All vehicles.

Method of Inspection	Required Standard
Where there are requirements for specific vehicles, the vehicle type will be shown in **bold** text. The minimum braking efficiency requirements are located at the Annex to this section. A braking system will be considered to have met the efficiency requirements if **more than** half the wheels on that system lock. Vehicles that cannot be tested using a roller brake tester due to their design (e.g., solid rear axle, narrow track etc.) are to be checked using an electronic decelerometer and its associated mounting kit in accordance with the operating instructions, where this test is to check that the system being tested meets the minimum requirements; it is not aimed at establishing the maximum braking efficiency. Serious under-inflation of tyres is not a reason for failure; however, an examiner may decide not to conduct a brake test if tyre damage is likely. When using a roller brake tester, the wheel not on the rollers must be braked and chocked against the reaction force. This is especially important for lightweight machines and those with small wheels. In the case of a linked brake system, it may not be possible to apply the brake of the wheel not being tested prior to starting the test. If a roller brake test is repeated, the chock should be removed, the machine resettled in the rollers and the chock replaced.	**1. Roller Brake Test:** a) the calculated service brake efficiency must not be below the minimum required. b) the calculated secondary brake efficiency must not be below the minimum required **(3/4-wheel vehicles with single line system only)**. c) the calculated parking brake efficiency must not be below the minimum required **(3/4-wheel vehicles only)**. d) a significant braking effort indicating brake bind must not be recorded from a road wheel without application of the brakes. e) there must be no evidence of severe brake grab or judder as the brake is applied. f) the braking effort must rise and fall at about the same rate as the effort applied. g) any brake imbalance between two wheels on a steered axle must not be more than 30%. **2. Decelerometer Test:** a) the indicated service brake efficiency must not be less than the minimum required.

Method of Inspection	Required Standard
The retardation force of a sidecar brake is not to be included unless it is operated by one of the motorcycle brake controls. Disregard any brake “imbalance” when the brake effort from each wheel on the axle is less than 15% of the axle weight. The efficiency of each system operated by a single brake control is the ratio of the total retarding force generated by that system divided by the calculated laden weight of the machine. Most machines have two controls, one operating the front wheel brake and the other the rear wheel brake. The efficiency for front and rear wheels can then be calculated using the formulae in Annex 1, Efficiency Item 5. Where a linked or combined system is operated by one control, the retarding force used in the efficiency calculation is the total obtained by that wheel when operated by both controls.	b) the indicated secondary brake efficiency must not be less than the minimum required **(3/4-wheel vehicles with a single line system only)**. c) the indicated parking brake efficiency must not be less than the minimum required **(3/4-wheel vehicles only)**.

Record of Revision

Revision	Date	Change
1	June 2005	R&P 1. b) expanded.
2	August 2007	R&P 2 added (dynamic testing).
3	15/04/2025	Locked wheels paragraph clarified. Section revised.

This page left intentionally blank.

21 Annex - Efficiency Calculations

1. Total up the braking effort recorded from all the relevant wheels of the braking system under assessment, i.e. the service brake, secondary brake, or parking brake system.

2. For mass production vehicles obtain the laden weight of the vehicle, this can be either the “Design Gross Weight” (DGW) issued by the manufacturer (where confirming evidence is available) or the “Calculated Laden Weight” (see below), where there is no evidence of the manufacturers weight, or there is evidence that the weights determined by the manufacturer are no longer appropriate e.g., due to modification.

3. For bespoke or “non-mass production” vehicles or when there is no evidence of the manufacturers Design Gross Weight the “Calculated Laden Weight” must be used. The Calculated Laden Weight is the mass in running order (in kg) plus 75kg for each designated sitting position.

4. For goods vehicles obtain the “Design Gross Weight” from the manufacturer’s plate fitted to the vehicle.

5. The brake efficiency is calculated by using the equation

$$\text{Efficiency \%} = \frac{\text{Total retarding force for one system} \times 100}{\text{Gross/Laden Weight}}$$

6. Using the brake figures obtained during the test; calculate the value of the required system against the minimum requirements below.

Minimum requirements

Vehicle Type	Independent Service Brakes		Other Systems		
	Front	Rear	Combined	Secondary	Parking
2-wheeled moped & low powered moped	32%	25%	n/a	n/a	n/a
3-wheeled moped/light quadricycle	32%	25%	50%	23%	18%

Vehicle Type	Independent Service Brakes		Other Systems		
	Front	Rear	Combined	Secondary	Parking
Motorcycle	40%	27%	n/a	n/a	n/a
Motorcycle tricycle, amateur built tricycle, or quadricycle	28.5%	28.5%	50%	23%	18%
Tricycle/heavy quadricycle	n/a	n/a	50%	23%	18%

Note: A braking system will be considered to have met the efficiency requirements if **more than** half the wheels on that system lock.

Record of Revision

Revision	Date	Change
1	August 2007	Item 3 clarified
2	June 2010	Table expanded for clarity
3	January 2019	Table (Vehicle Type) updated.
4	15/04/2025	‘Amateur built tricycle’ added to Vehicle Type in Table. Add Note to minimum requirements table to clarify efficiency requirements for locked wheels (MSVA 021 003).

This page left intentionally blank.

22 Goods Vehicle Identification Plate

Application: Goods vehicles only.

Method of Inspection	Required Standard
A goods vehicle must be fitted with a plate complying with the required standards and be accompanied by satisfactory evidence of the maximum permitted laden weights that have been assigned to the vehicle by the manufacturer. An example of this evidence may be in the form of a manufacturer's VIN plate, or documentation issued by the manufacturer, etc.	**1.** A Goods Vehicle Identification Plate must be: a) fitted. b) in a conspicuous and readily accessible position. c) legible. **2.** The plate must be indelibly marked with: a) the manufacturer's name. b) the vehicle identification number. c) the maximum permitted laden weight for each axle. d) the maximum permitted laden weight for the vehicle. e) the maximum permitted laden train weight if equipped to tow a trailer. **3.** The maximum laden weight displayed on the plate must not exceed: a) the mass in running order, plus 1075 kg for a goods quadricycle. b) the mass in running order, plus 1575 kg for a goods tricycle.

Record of Revision

Revision	Date	Change
1	June 2010	Maximum laden weights clarified.
2	15/04/2025	Section format revised. Clarification of evidence required added to MoI (TSE MSVA 022 001).

23 Power Restriction Information Plate

Application: This examination applies to 2 wheeled mopeds (Category A), motorcycles with an engine capacity not exceeding 125cc and a power output not exceeding 11kW (Category B), and 250W Low Powered Mopeds. (See additional information in MoI.)

Method of Inspection	Required Standard
This examination **does not apply** to any vehicle manufactured before the date the Regulations come into force (08 August 2003), amateur built vehicles, rebuilt vehicles, or vehicles manufactured using the parts of a registered vehicle. For the purposes of this examination, where a vehicle is propelled solely by electrical means, the maximum continuous rated power output is to be considered in place of engine capacity. For vehicles propelled using electrical means that fall within the scope of this section, applicants must refer to the Foreword section of this Manual for vehicle classification evidence requirements. Details of the power output restriction may be incorporated into the vehicle manufacturer's VIN plate, where fitted. Where required, the power output must be marked in the following format: ‘ _____ kW (or kw)’. For a 250W LPM, this may be marked in either W or kW. There is no requirement to count the teeth/measure pulleys. See **Glossary of Terms** section for definition of a 250W LPM. **Note 1:** For markings to be considered 'indelible' they should be unlikely to become disfigured or obliterated during the life of the vehicle. Whilst stamping or engraving is preferable it is possible to accept a printed or painted plate providing it has been treated in such	**1.** The plate must be permanently attached in a conspicuous and readily accessible position. **2.** The information on the plate must be legible. **3.** The characters marked on the plate must be at least 2mm high. **4.** The plate must be indelibly marked with (see **Note 1**): a) the manufacturer’s name. b) the category of vehicle. c) the number of teeth on the drive and driven sprockets (see **Note 2**), or d) drive/driven pulley diameter in mm (see **Note 2**), or e) the power in the required format. **In the case of a 250W Low Powered Moped** **5.** A 250W LPM must be indelibly marked (see **Note 1**) on a plate or by direct marking, displaying: • the manufacturer’s name (see **Note 3**), • the maximum continuous rated power output, and **either** • the maximum speed at which the motor can propel the vehicle, specified in mph or km/h, **or**

Method of Inspection	Required Standard
a way that it is most unlikely that essential information would be obliterated or defaced during the normal life of the vehicle. **Note 2**: This does not apply to direct drive systems, continually variable transmissions, or vehicles with fully electric drive systems. **Note 3:** Where a pedal cycle or an EAPC has been converted to provide throttle-controlled propulsion (twist and go) and is presented as a 250W LPM, the plate or marking must identify the person or organisation responsible for the conversion, unless originally manufactured as an EAPC, in which case the original manufacturer's identification may be retained.	• the nominal voltage of the battery.

Record of Revision

Revision	Date	Change
1	June 2005	RfR 2. c) and d) expanded.
2	August 2007	R&P/RfR 1. a) expanded.
3	June 2010	Regulation date added to Application, R&P/RfR 1. a) modified, R&P 2 note expanded, example plate added.
4	January 2019	Application updated.
5	15/04/2025	Section revised. Removal of plate size requirement. Added requirements for character height and engine power in kW (TSE MSVA 023 004).
6	06/11/2026	Section renamed. Application revised to include 250W LPMs. MOI revised to include electrically propelled vehicles and requirements applicable to 250W LPMs. Note 2 revised. RS 4 e) revised. New RS 5. New Note 3 referenced from RS 5.

This page left intentionally blank.

24 Defrost/Demist

Application: This examination applies to bodied three wheeled mopeds with a maximum power exceeding 4kW, tricycles and quadricycles fitted with a windscreen through which the driver must look to obtain a view from the normal seated position. This examination does not apply to vehicles having a fully opening windscreen or vehicles meeting the exemption criteria described in the Method of Inspection.

Method of Inspection	Required Standard
The following vehicles are also considered exempt from the requirements of this section: • Vehicles not fitted with side doors capable of covering at least 75% of the door aperture. • Vehicles where no structure attached to the windscreen extends rearwards by more than 100mm, with any detachable or retractable door or roof fitted and closed. Ensure that the vehicle is fitted with a system/systems capable of defrosting and demisting the windscreen to allow the driver an adequate view of the road in front. The method of determining a windscreen can be found at the Annex to Section 26.	**1.** The vehicle must be fitted with a system capable of defrosting/demisting the windscreen. **2.** The defrosting/demisting system must be capable of clearing a sufficient area of the windscreen to allow the driver an adequate view. **3.** The defrosting/demisting system must be operative.

Record of Revision

Revision	Date	Change
1	August 2007	Application clarified
2	15/04/2025	Section revised.
3	06/11/2026	Application and MoI revised to clarify the vehicles subject to defrosting and demisting requirements and applicable exemptions to certain partially enclosed vehicles.

25 Seat Belts and Anchorages

Application: This inspection applies to all 3 and 4 wheeled vehicles except 3 wheeled mopeds and quadricycles having an unladen weight of not more than 250kg, tip up occasional seats fitted to any vehicle, & sidecars. However, if the exceptions are fitted with seat belt anchorages, they must meet the requirements.

Method of Inspection	Required Standard
This inspection **does not** apply to tricycles and quadricycles without bodies that have driver/passengers that sit astride (immediately in front/behind each other along the longitudinal plane) on saddle type seats. Disabled person's vehicles fitted with a disabled person's belt are exempt from the requirements of standard 3b and c, 5, 6, 7, 10, and 11. The minimum anchorage points and seat belt requirements are listed in the table at Page 4 of this section. Check that each seating position is fitted with the required number of anchorage points and that the anchorage points (including those that have no belt fitted) and the surrounding vehicle structure is of adequate strength and not likely to fail prematurely. Whilst sitting in each seat in turn and wearing the belt ensuring it is correctly adjusted, check the position of the webbing on the torso and the location of the **effective belt anchorage** points in relation to the seated body position (**Note 4** below). The position of the belt upon the torso must be determined by the location of the anchorage point or an intermediate securely fixed device such as a belt guide. A lap belt means a seat belt which: • passes across the wearer's pelvic region • is designed for use by an adult	**1.** Each seating position must have the minimum number of anchorage points. **2.** Any seat belt anchorage or the surrounding structure must be of adequate strength and not be likely to fail prematurely (see **Note 1**). **3.** Where required, a seat must be fitted with a seat belt. **4.** Any seat belt must be of the correct type and adult size. **5.** Each seat belt must bear the appropriate approval marks or have the equivalent characteristics to that of a belt approved for the same category of vehicle to ensure the belt meets the required approval standards (see **Note 2**). **6.** Any seat belt must be secured: a) to the vehicle structure, or to the seat structure where the belt is fitted to the seat. b) using a fixing of adequate strength. c) so that it can be separated from the anchorage without causing damage to the anchorage.

Method of Inspection

A 3-point lap and diagonal belt means a belt which:

- restrains the upper and lower parts of the torso
- includes a lap belt
- is anchored at no less than 3 points
- is designed for use by an adult

An adult harness comprising of a lap belt and shoulder straps is considered an alternative to a 3-point belt.

Evidence that a vehicle complies with the following standards will be accepted instead of the indicated MSVA requirements:

Subject	USA (U)	Canada (C)	Japan (J)
Seats and their anchorages	FMVSS 207	CMVSS 207	11-4-8 11-4-46 (seats and seat anchorages) (J1)
Seat belts RS 5, 7 and 8	FMVSS 209 (U1)	CMVSS 209 (C1)	
Seat belt anchorages RS 1 and 2	FMVSS 210 including associated requirements of FMVSS 207 and 208	CMVSS 210 including associated requirements of CMVSS 207 and 208	11-4-10 11-4-21 (seat belt anchorages)
Installation of seat belts RS 3, 4, 5, 6, 10, 11, 12 and 13	FMVSS 208	CMVSS 208	

Note 1: The anchorage and surrounding structure must be of adequate strength to withstand the load likely to be imposed by the belt in the event of a frontal impact. Where the belts are attached to the seat itself consideration must be given to the seat mounting as a

Required Standard

7. Any seat belt:

a) webbing must be a minimum of 46mm in width (33mm in the case of a harness).

b) components must be suitably protected against corrosion (e.g., plated or coated).

c) locking mechanism must be capable of being released by a single movement by either hand when under load or not under load.

d) locking mechanism that is in contact with the body must be a minimum of 46mm in width.

8. A static belt must have a manual adjusting device that is:

- accessible to the wearer when seated.
- convenient and easy to use.
- capable of being tightened with one hand.

9. A retractable belt mechanism (where fitted) must (see **Note 3**):

a) function from the upper anchorage where a lap/diagonal belt is fitted.

b) lock when the vehicle is subject to:

(i) deceleration, or
(ii) tilt, or
(iii) the belt is pulled quickly from the retracting mechanism.

c) retract the webbing sufficiently to remove all the slack from the belt with the belt locking mechanism fastened and the

Method of Inspection	Required Standard
belt anchorage point. (See Annex 1). Materials and construction methods must be considered. **Note 2:** The appropriate approval markings required are: (i) “E” or “e,” DOT (American) (ii) BSAU 183; 1983 for passive belts (iii) BS3254: 1960 or BS 3254 part 1 1988 for harness belt The equivalent characteristics to that of a belt approved for the same category of vehicle are as required in Standards 7a, b, c, d, 8, & 9b. **Note 3:** A belt may be fitted with retractor mechanisms on both lap and diagonal sections. If a single retractor mechanism is fitted it must act on the diagonal section. It is permissible to assist the retracting mechanism when conducting a check that the slack is removed. **Note 4:** The effective belt anchorage is the actual anchorage point to the vehicle unless a change of direction of the belt to the wearer is produced by a fixed intermediate device, for example a belt guide. **Note 5:** This check may be carried out with the presenter wearing the belt, where the seat must be in the normal driving position.	seat unoccupied. **10.** There must be no sharp edges likely to damage the belt in normal use. **11.** There must be provision for safe and convenient storage of the type of belt fitted. **12.** The seat belt effective anchorage location (see **Notes 4 & 5**): a) must allow the belt to rest on the pelvic area of the body. b) of the lap belt section must be to the rear of a vertical line taken at the point where the belt passes over the body. c) must allow the belt to rest on the shoulder of the wearer without slipping off (3 point/harness only). d) of the diagonal section must be to the rear of the front of the body/shoulder of the wearer when seated in a relaxed upright position. **13.** An upper seat belt anchorage point for lap/diagonal and harness type belts must (see **Annex 2**): a) have a height of at least 450mm from the reference point. b) have a minimum distance of 140mm from the seat centre line.

Seat Belts – Minimum Obligatory Requirements

Minimum anchorage points and seat belt requirements

Driver's seat	Outboard (front) passenger seat	Centre front seat	Forward facing rear seats Other seats as defined at footnote # fitted to unbodied tricycles
3 anchorage points	3 anchorage points	2 or 3 anchorage points	2 anchorage points
3-point lap and diagonal belt fitted	3-point lap and diagonal belt fitted	2-point lap belt or 3-point lap and diagonal belt*	2-point lap belt

Additional seats to the side of, and non-sit astride seats directly behind the driver/passenger, are required to be fitted with a lap belt.

* The front centre seat will require 3 anchorages and a 3-point lap and diagonal belt where the windscreen is located:

- within 840mm of the seat reference point in the case of a non-sliding seat
- within 840mm of the seat reference point with the seat 127mm forward of its rearmost position, in the case of a sliding seat

Annex 2 defines a 'seat reference point'.

Record of Revision

Revision	Date	Change
1	August 2007	R&P 3. b) expanded
2	15/04/2025	Section revised.
3	06/11/2026	Comparable standards table in MoI updated.

This page left intentionally blank.

25 Annex 1- Seat Belt Anchorage Strength Assessment

In a severe accident, the seated occupant can exert huge loads upon their seat belts (in the region of 1.5 tonnes for a 75kg person). Seat belt anchorages together must withstand these large loads from the seat belts. These loads in turn must be dissipated by the vehicle structure.

In assessing the strength of the anchorages, it is essential to consider;

- the vehicle structure in the immediate vicinity of the anchorage, and
- the parts of the vehicle structure into which the loads from the anchorages will be dissipated

These large loads will act in several directions as shown in Figure 1

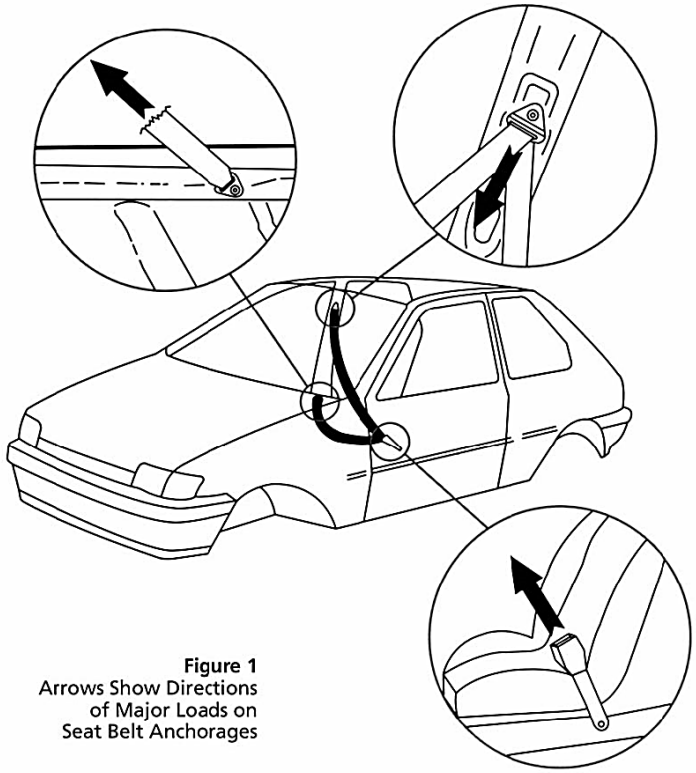

Figure 1
Arrows Show Directions of Major Loads on Seat Belt Anchorages

1. All Vehicles

What to look for:

- Evidence that anchorages in a vehicle of the same, or a remarkably similar type have been subjected to a seat belt anchorage strength test to “European Standards” by a recognised authority. This may be acceptable where there is clear evidence that the structure is identical to the vehicle originally tested.
- Welding should appear neat and of good quality; whilst it is impossible to judge the quality of a weld just by looking at it, messy welding is rarely strong welding.
- Bolts used in structural areas should be of grade 8.8 or better. Such bolts will be marked 8.8 or 12.9 on the hexagonal head, however cap headed bolts or 7/16 UNF seat belt anchorage bolts (with an anodised finish) not marked in this way may normally be considered to be of equivalent strength. Bolts should be M8 or larger.
- Threaded bushes should be welded (at both ends) through the tube and not mounted on the surface.

Cause for concern:

- Welds of poor appearance, gaps, or visible lack of penetration.
- Anchorages in thin and/or flat panels with little stiffness or reinforcing structure or in thin-walled tube.
- Low grade bolts (less than 8.8).
- Insufficient bolt capacity, e.g., number of bolts and/or diameter of bolts.

2. Monocoque construction

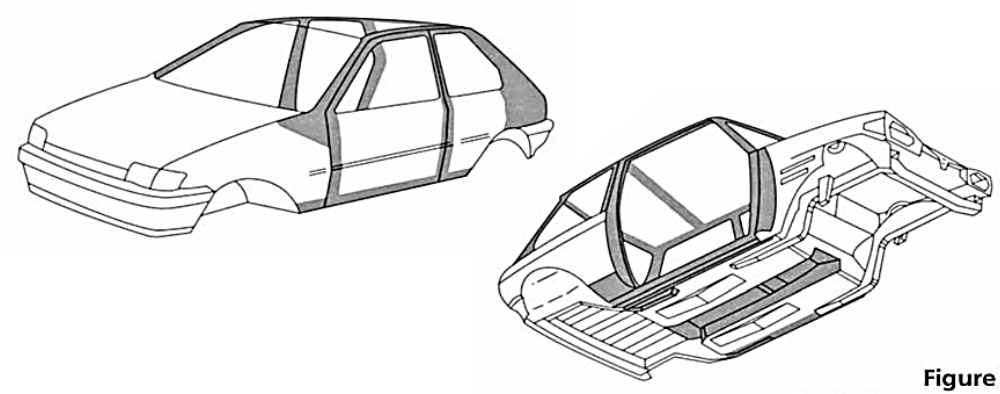

Figure 2
Shaded Areas Show Important Structure.

2 (i). Steel Monocoques

What to look for:

- Structural box sections.

2 (ii). Composite Monocoques

Composite materials such as glass reinforced plastic (GRP also known as fibreglass) are fairly common in the specialist vehicle industry.
What to look for:

- Box Sections with heavy lay up (i.e., material thickness).
- Reinforced areas, for example using folded metal box sections, laminated into the vehicle structure.
- Material lay up of good quality with absence of air bubbles.
- 7/16 UNF threaded fixing of suitable surface area or welded to a spreader plate of suitable surface area.

Cause for concern:

- Threaded fixing/spreader plate or insufficient surface area.
- Threaded fixing and/or spreader plate only retained by a thin layer of laminate on the outer surface of the structure.
- Material lay up poor with obvious air bubbles or delamination (separation of material layers).
- Cracking or flexing of structural areas.
- Loads from anchorages being transmitted to weak areas of vehicle.

3. Anchorages on Steel Chassis

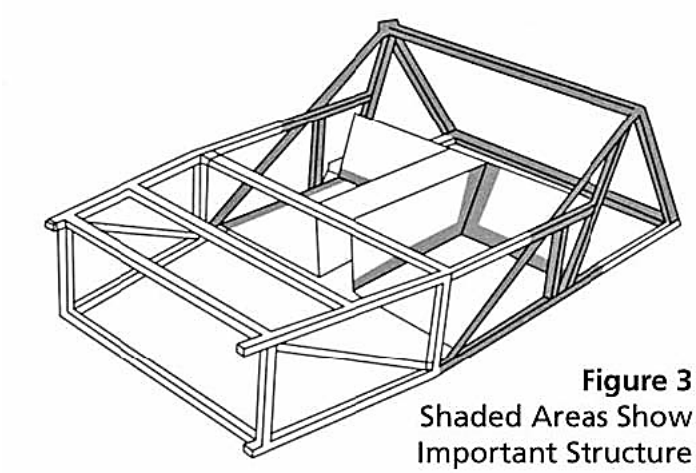

Figure 3
Shaded Areas Show
Important Structure

What to look for:

- Triangulation and bracing will provide strength and spread the loads effectively into the chassis.
- Upper anchorage must be adequately braced to strong areas of the chassis.
- Threaded seatbelt anchorage fastening should be welded into tubes or onto plates of sufficient thickness.

Cause for concern:

- Absence of sufficient structure to transmit loads from anchorages.
- Absence of bracing or triangulation from upper anchorage structure.

4. Steel Chassis with Anchorages on Roll Cage.

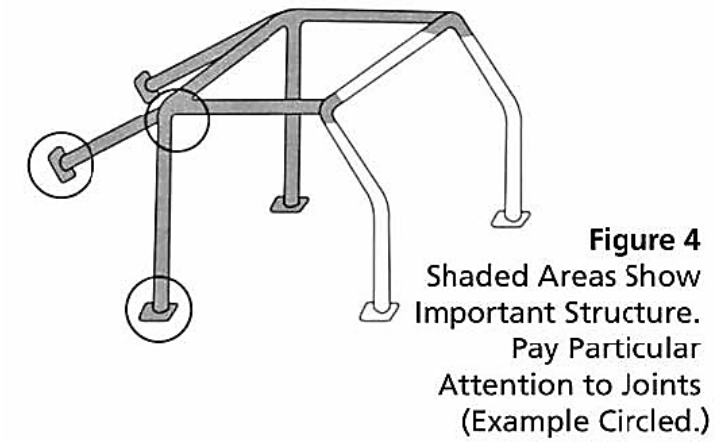

What to look for:

- Triangulation and bracing which will provide strength and spread the loads effectively into the chassis.
- The joint where the roll cage joins the chassis and the chassis itself must be sufficiently strong to withstand the loads from the anchorages.
- Upper anchorage must be adequately braced from near the anchorage to strong areas of the chassis.
- Threaded seatbelt anchorage fastening should be welded into tubes or on to plates of sufficient thickness.
- Bolted joints joining the cage to the chassis and parts of the cage to each other should be of sufficient strength.

Note: For guidance roll cages should ideally be manufactured of Cold Drawn Steel tube dia. 45mm x 2.5mm wall thickness OR dia. 50mm x 2.0mm wall thickness. Bend radii should exceed three times the tube diameter. Where tubes are ovalised during bending, the ratio d/D should not be less than 0.9 (d = small diameter, D = larger diameter).

Cause for concern:

- Roll cage manufactured using aluminium.
- Poor bolted joints, or joints that could separate due to loads in anchorages.
- Insufficient bracing or bracing to upper anchorage too low.
- Roll cage material cracked or badly creased.
- Cage-to-chassis mounting plates of smaller thickness than cage wall thickness.
- Cage not attached to chassis, or insufficient joint strength.

5. Composite Structural Body with Anchorages on Integral Roll Cage.

What to look for:

- A combination of the strength characteristics of (2ii) and (4) above.
- Where a combination of the strength of the body and cage are used to strengthen the anchorages, body and cage should be joined at regular intervals.

Cause for concern:

- As (2 (ii) and (4) above.

6. Anchorages Integral with Seat Structure.

What to look for:

- Seats where the integral anchorage(s) has been previously approved in a vehicle. In this case attention must still be paid to the method of fixing the seat in the vehicle.
- Seats fixed to vehicle structural areas, i.e., box sections etc.
- Use of spreader plates to spread loads into structural areas of the vehicle.
- Where lower anchorages are mounted on the seat structure, they should be welded or permanently fixed to the seat in a structurally strong area.
- Where the upper anchorage is mounted on the seat structure, the seat back must be braced to the lower seat structure. This bracing must begin as close as possible to the upper anchorage.
  Where the upper anchorage is mounted on the seat structure, the seat-to-floor fixing must be substantial to withstand the large leverage imposed upon it.
- Where the seat is mounted on runners, these must be of adequate strength.

Cause for concern:

- Seats mounted on flat panels, non-structural areas of vehicle floor or open channel section material.

- Lack of load spreading plates.
- Seat frames constructed of thin wall circular section tube in areas receiving loading from anchorages.
- Upper anchorages on seat back without bracing to strong area of seat.

Record of Revision

Revision	Date	Change
1	15/04/2025	Section format revised.

This page left intentionally blank.

25 Annex 2- Seat Belt Upper Anchorage Location

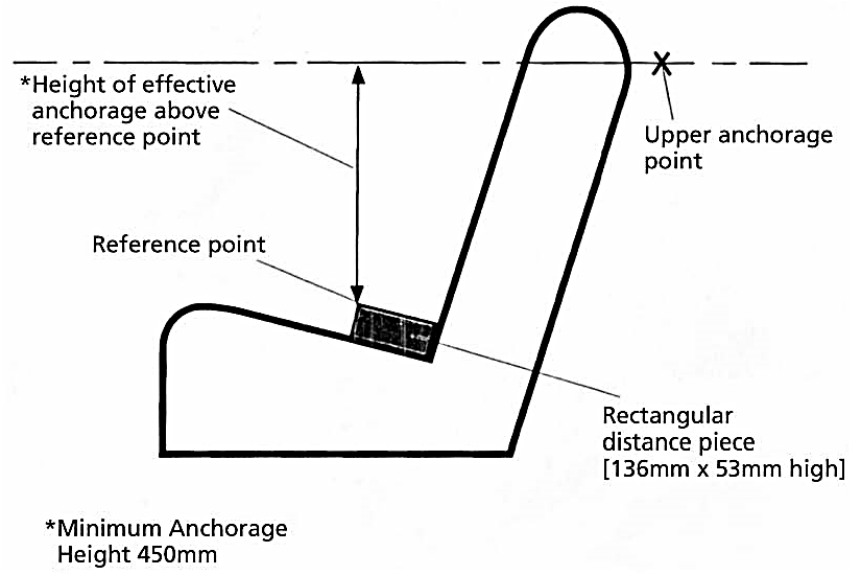

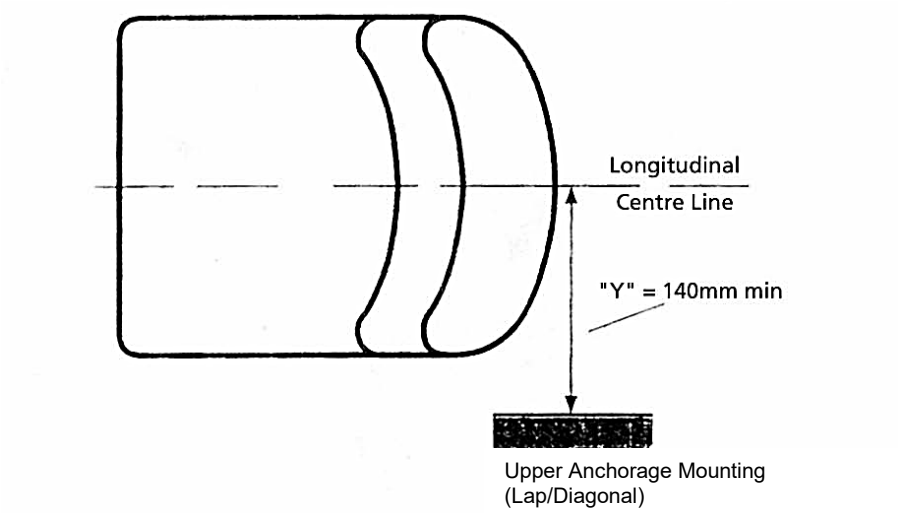

Record of Revision

Revision	Date	Change
1	15/04/2025	Section format revised.

26 Glazing

Application: This examination applies to all bodied vehicles, other than mopeds, fitted with a windscreen, side screens or windows.

Method of Inspection

Bodied mopeds with glazing must meet Standard 1.

The method of determining a windscreen can be found at the Annex to this section.

Safety Glass must conform to one of the following European Standards:

- British Standard: BS 857 or 857/2
- BS 5282
- BS AU 178
- ECE Regulations 43 – e.g., E11 - 43R 002439
- EEC Directive 92/22 – e.g., e11.

Standards acceptable in place of the European Standards required in this examination are:

Country	Standard
USA	FMVSS 205 (U2)
Canada	CMVSS 205 (C2)
Japan	JIS 3211
South Africa	SABS 1191/1193
Australia/New Zealand	AS/NZS 2080/2080T (A1)
India	IS 2553 (Part 2) 1992 (I1)

(U2) and (C2) glass bearing the following marking complies with FMVSS 205 and CMVSS 205:

- in the case of a windscreen AS1 or AS10.
- in the case of a window wholly or partly on either side of the driver's seat AS1, AS2, AS10, AS11A.
- in any other case AS1, AS2, AS3, AS10, AS11A, AS14, AS15, AS16.

Required Standard

1. Whilst seated in the driving position, the driver must have a fully unobstructed view of the road to the front and forward of the nearside and offside of the vehicle (see **Note 1**).

2. Windscreens, windows, and side screens (where fitted) must be securely attached to the vehicle (see **Note 2**).

3. All windscreens and other windows, wholly or partly on either side of the driver's seat (not including side screens), must be made of safety glass and marked by the manufacturer, to one of the European or acceptable standards listed.

4. Any other windows (including sunroofs), and side screens must be made of:

   a) safety glass and marked by the manufacturer, to one of the European or acceptable standards listed, or

   b) safety glazing (see **Note 3**).

5. The opacity of all windscreens and windows which are used to obtain a rear field of view through external rear view mirrors must allow a visual transmission of light of not less than 70%.

Method of Inspection	Required Standard
(A1) glass does not include opacity. It must display the manufacturer's name or trademark: • Windscreen to show 2080 and WHP. • Other windows to show 2080T and CHT, L, LT, LCHT, or HP. I1 glass does not include opacity. It must display the manufacturer's name or trademark: • Windscreen to show Z or LW. • Other windows to show T, TW, Z, L, or LW. **Note 1:** The following items do not constitute an obstruction to vision: • Fixed or moveable vents. • Outside radio aerials. • Rear view mirrors. • A windscreen wiper. • Steering wheel and dashboard area to the rear of the wheel as measured by method of "determining the height of the wheel rim" in the Annex to this section. **Note 2:** Side screens are permitted to be detachable, i.e., slot into position, but must be secured such that during normal use they will not become detached or interfere with the driver's control of the vehicle. **Note 3:** 'Safety glazing' means material (other than glass) which is constructed or treated that if fractured does not fly into fragments likely to cause severe cuts. There is no marking requirement for safety glazing.	

Record of Revision

Revision	Date	Change
1	August 2007	Acceptable standards expanded.
2	January 2019	Clarify application.
3	15/04/2025	Section format revised.
4	06/11/2026	Correction of I1 ‘Other windows’ required marking to LW.

This page left intentionally blank.

26 Annex – Determining a Windscreen

The “horizontal plane” is obtained by measuring / projecting a line through a series of datum points from the driving position to its point of intersection with the windscreen or to the road ahead. The driver’s seat, if adjustable, should be adjusted to its rearmost / lowest position.

a. In the case of a seat with an adjustable back rest, the measurements should be made with the seat back rest adjusted to an angle of 25°, line ‘A’ being parallel to the centre line of the seat back rest.

b. In the case of a seat with a fixed back rest, the dimensions ‘A’ and ‘B’ should be as follows. A=562.5mm B=187.2mm

The “horizontal plane” is at the point where the projection of line ‘C’ intersects the windscreen / windshield, or if above the windscreen / windshield, the vertically projected plane of the windscreen / windshield (line ‘D’).

Where the “horizontal plane” intersects Glazing at any point the Glazing is determined to be a windscreen. The vehicle will therefore be required to meet the standards of Section 24 Defrost/Demist and Section 27 Windscreen Wipers and Washers.

Angle	‘A’	‘B’
15° - 19°	582.5mm	178.8mm
20° - 24°	572.0mm	182.6mm
25° - 29°	562.5mm	187.2mm
30° - 34°	553.4mm	191.3mm
35° - 39°	543.5mm	194.9mm
40° +	534.1mm	198.8mm

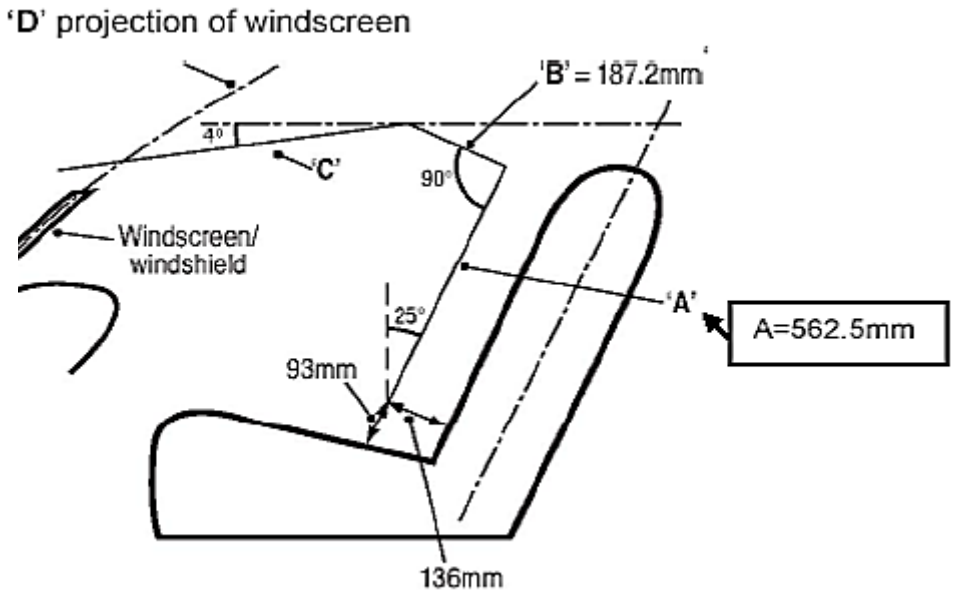

Annex 1 – Determining a Windscreen 26

Record of Revision

Revision	Date	Change
1	June 2010	Dimensions diagram and table added
2	15/04/2025	Section revised.

27 Windscreen Wipers and Washers

Application: This examination applies to all three wheeled mopeds, tricycles and quadricycles fitted with a body, having a windscreen which the driver must look through to obtain a view from his normal seated position.

Method of Inspection	Required Standard
The method of determining a windscreen can be found at the Annex to Section 26. Vehicles shall be fitted with adequate windscreen washing and wiping devices. Ensure that all wipers continue to move automatically over an area of the windscreen sufficient to give the driver an adequate view of the road in front. The engine should be running, and the windscreen must be kept wet when checking the wiper operating cycle frequencies. There is no requirement for the wiper arm to self-park. **Note 1**: A 'cycle' is the forward and return movement of the windscreen wiper.	**1.** The vehicle must be fitted with a windscreen washer and wiper system sufficient to give the driver an adequate view of the road in front. **2.** All front wipers must continue to move automatically over the swept area of the windscreen. **3.** All front wipers must be secure and capable of being lifted from the windscreen to allow for cleaning of the windscreen. **4.** A windscreen wiper must have an operating frequency of at least 40 cycles per minute (see **Note 1**). **5.** The windscreen washer system must provide enough liquid to adequately clear the windscreen in conjunction with the wiper(s). **6.** The windscreen washer system must have a reservoir capacity of at least 1 litre.

Record of Revision

Revision	Date	Change
1	15/04/2025	Section revised.

28 Masses and Dimensions

Application: All vehicles.

Method of Inspection	Required Standard
Visually assess dimensions only. If there is any uncertainty about whether the vehicle meets the requirements, then measure. The maximum unladen vehicle mass must be declared on the test application form. The declared weight of the vehicle should be verified when carrying out the RBT test. In extreme circumstances, the vehicle may be weighed at the start of the examination. Where applicable, assess that the maximum payload, where stipulated in Table 3, will not be exceeded.	**1.** The vehicle must meet the dimensional requirements (see Table 1). **2.** The vehicle must not have an unladen mass that exceeds the limit permitted for its class (see Table 2). **3.** Where applicable, the maximum payload (where stipulated in Table 3) must not be exceeded.

Table 1

Maximum vehicle dimensions

All vehicles	
Length	4.0 m
Width	2.0 m (1.0 m For Two Wheel Mopeds)
Height	2.5 m

Table 2

Maximum vehicle masses – Unladen mass

Vehicle	Maximum unladen mass
2 Wheel Moped	As Manufacturers Declaration
3 Wheel Moped	270 kg (not including the mass of traction batteries in the case of electric vehicles)
Light Quadricycle	425 kg (not including the mass of traction batteries in the case of electric vehicles)
Motorcycle	As Manufacturers Declaration
Heavy Quadricycle	450 kg
Heavy Quadricycle (Goods)	600 kg
Tricycles	1000 kg

Table 3

Maximum vehicle masses – Payload

Vehicle	Maximum Payload
3 Wheel Moped	300 kg
Light Quadricycle	200 kg
Tricycle (Goods)	1500 kg
Tricycle (Passenger)	300 kg
Heavy Quadricycle (Goods)	1000 kg
Heavy Quadricycle (Passenger)	450 kg

Record of Revision

Revision	Date	Change
1	June 2010	R&P 1 clarified, R&P 3 and Payload table added.
2	15/04/2025	Section revised. To align with Regulation (EU) No. 168/2013, weights at Table 2 for 3 wheel moped, light and heavy quadricycles updated. Weight at Table 3 for heavy quadricycle (passenger) updated.

This page left intentionally blank.

29 Glossary of Terms

250W LPM
This is a sub-group of Low Powered Moped that meets the criteria laid down in the Electrically Assisted Pedal Cycle (EAPC) Regulations 1983 (SI 1983 No. 1168) as amended by SI 2015 No. 24. The requirements are that the vehicle:

• Be fitted with pedals by means of which it is capable of being propelled.
• Be fitted with no motor other than an electric motor, which has a maximum continuous rated power, which does not exceed 250 watts and cannot propel the vehicle when it is travelling at more than 15.5 mph. (Note: the official speed is 25 km/h, MSVA will accept declarations up to and including 16 mph as per low powered mopeds).

These vehicles will be required to meet the standards applied to Low Powered Mopeds except where specified. For MSVA purposes, throttle-controlled (twist and go) electrically assisted pedal cycles (EAPCs) fall into the 250W LPM category.

Blunted Edge
An edge not likely to cause injury whatever the circumstances under finger/thumb pressure. (Contact is not likely to puncture the skin).

Body Plan Form
A projection of the complete body onto a horizontal surface including all bodywork and wings but excluding wheels and suspension.

Bodied vehicles
A vehicle with a structure consisting of a floor plan and panels which, with a roof fitted, fully encloses the vehicle occupants and, without a roof, encloses them other than where the roof would be. No 2 wheeled vehicles will be fitted with a body. As a guide, if the driver sits on or astride the vehicle it would be classed as unbodied. If the driver sits in the vehicle with surrounding structure which is higher than the seat squab it would be classed as bodied. Surrounding structure refers to solid body panels, doors or chassis structure and does not include removable, retractable or opening retaining bars.

Brake control reserve travel
Any brake which when fully applied has a capability for further application by the control lever before reaching the end of its travel.

Brake Efficiency
Maximum total brake force expressed as a percentage of maximum gross weight.

Cab
The part of the bodywork constituting the compartment reserved for driver and passenger, including its doors.

Corner (unbodied projections)
Where three planes meet

Designated Seating Position
A position where there is a seat designated for normal use while the vehicle is travelling on the road.

Disabled Persons Belt
A seat belt which has been specially designed or adapted for use by an adult or young person suffering from some physical defect or disability and which is intended for use solely by such a person.

Electrically Assisted Pedal Cycle (EAPC)
Refer to 250W LPM.

Edge (unbodied projections)
Where two planes meet.

External Surface
The outward facing surface of the vehicle at any height from the floor line up to a height of 2m from the horizontal surface on which the vehicle is standing.

Extreme Outer Edge
In relation to the side of a vehicle, the vertical plane parallel with the longitudinal axis of the vehicle and coinciding with its lateral outer edge, disregard the projection of:

a) distortion of any tyre due to the weight of the vehicle
b) connections for tyre pressure gauges
c) anti-skid devices mounted on the wheels
d) rear view mirrors
e) lamps and reflectors
f) custom seals and devices for securing and protecting such seals
g) special equipment (see **Note** below)
h) in respect of Section 8/9 (Exterior Projections) only; windows, handles, hinges, push buttons and fuel tank filler caps

Note: In respect of item g) “Special Equipment” is – a movable platform fitted to a vehicle; the apparatus for moving the platform and any jacks fitted to the vehicle for stabilising it while the platform is in use.

Front fog lamp
A front fog lamp is defined as a lamp used to improve the illumination of the road in case of fog, snowfall, rainstorms, etc. with a wide flat-topped beam which operates by an independent switch (irrespective of the operation of any position or head lamp).

Gas discharge headlamp
A light source in which the light is produced by a gas discharge.

Goods Vehicle
A vehicle with a load carrying capacity in excess of passenger and luggage capacity, having an area from the rear of the passenger seat to the rear of the load space greater than that of the passenger area. On a bodied vehicle this is measured from the most forward point under the dashboard to the rear of the seat base with the seat in the rearmost position (if adjustable). On a vehicle without a body the area is measured from the front foot pegs to the rear of the rearmost sitting position.

Hand Brake
A brake system operated by a hand control, which is designed to be used as a service brake.

Harness Belt
Means an adult belt which is a harness belt comprising a lap and shoulder straps.

Load/speed index (Service Description)
Code numbers and letters that, by referring to a chart, show the maximum weight and speed which that tyre is capable of sustaining.

Ignition Switch
A switch normally used to start the engine. Usually, key operated but can be a coded switch, swipe card, etc.

Insecure
A component or its fixing is, due to its design or a construction feature, not completely attached to the vehicle structure or to another associated component as intended.

Lap Belt
A seat belt which passes across the front of the wearer’s pelvic region, and which is designed for use by an adult.

Longitudinal Plane
A vertical plane parallel to the longitudinal axis of a vehicle.

Mass in Running Order
The weight of the vehicle without rider, with all the required equipment, fluids, and a full tank of fuel or, in the case of electrically propelled vehicles, the traction batteries. This weight is sometimes referred to as “kerb weight.”

Max power speed
The speed (in RPM) at which the engine develops its maximum power output. If this is not known, the maximum design speed (in RPM) is required (usually the beginning of the red zone on the rev counter).

Motorcycle quadricycle
A quadricycle which is a saddle seat vehicle, the method of steering control for which is by handlebar. (The machine will have a sit astride seat and motorcycle style steering control).

Motorcycle tricycle
A tricycle which is designed and constructed with a single front wheel and motorcycle type suspension and steering.

Park Brake
A brake system which could be hand or foot operated, which must be capable of being sustained in the on position by purely mechanical means, and which is designed to be used as a parking, secondary or emergency brake.

Plate (unbodied projections)
See “stem”

Payload
The maximum payload of a vehicle is the difference between the vehicle maximum mass and the mass in running order plus 75 kg for the rider/driver. Passengers will be calculated as 75 kg per seat.

Production Vehicle
A vehicle of a make, model and type mass produced by the vehicle manufacturer.

Rear cab bulkhead
The part situated furthermost to the rear of the outer surface of the compartment reserved for the driver and passenger. (See Cab).

Reciprocally incorporated
Devices having separate light sources or a single light source operating under different conditions (for example, optical, mechanical, electrical differences), totally or partially common illuminating surfaces and a common lamp body.

Rotary engine
An engine in which the torque is not provided by any reciprocating pistons, and which is deemed to be a four-stroke engine.

Side Screen
An item of glazing, wholly or partly on either side of the driver's seat, which does not slide or move relative to the vehicle or any of its parts (including glazing) in a manner likely to cause abrasion to any glazing surface.

Sit astride seats (Saddle seats)
Seats designed to be sat on with the rider's legs hanging down either side, operating motorcycle type steering control. Where doubt exists, the following criteria are to be applied: Width (i.e. across the vehicle) – not more than 400 mm, Length (i.e. front to rear) equal to or more than the width.

Stem (unbodied projections)
A "stem" is a solid or tubular cylindrical stalk projecting outwards perpendicularly from the centre line of the vehicle. Any projection not meeting these criteria is deemed a "plate."

Tip up (occasional) seats
A seat that is designed to tip or fold up intended for occasional use which is normally folded out of the way.

Twinned wheels
Two wheels mounted on the same axle, the distance between the centres of their areas of contact with the ground being less than 460mm. Twinned wheels shall be considered as one wheel.

Unladen weight
The mass of the vehicle ready for use and equipped with:

- additional equipment required solely for normal use
- complete electrical equipment including lights supplied by the manufacturer
- instruments and devices required by law
- the appropriate amounts of liquids in order to ensure the proper operation of the vehicle excluding fuel
- the mass of traction batteries is not included for electrically propelled vehicles

Upper seat belt effective anchorage
The mounting or guide point from which the shoulder belt descends to the buckle.

Windscreen
A transparent screen through which the driver must look, which extends above the ‘windscreen horizontal plane’ as defined in the Annex to Section 26.

Windshield (does not apply to mopeds, motorcycles, or motorcycle tricycles)
A shield through which the driver **does not** have to look to gain a view of the road ahead, and which **does not** extend above the ‘Windscreen horizontal plane.’

Record of Revision

Revision	Date	Change
1	June 2005	Mass in Running Order and Motorcycle quadricycle added, Side Screen expanded
2	June 2010	Load/speed index, sit astride seats and Unladen weight expanded, Payload and Twinned wheels added
3	January 2019	Definition of 250W LPM added
4	September 2022	Definition of ‘Reciprocally incorporated’ added
5	15/04/2025	Windscreen definition updated.
6	15/09/2025	Added 'Twist and Go' EAPCs to 250W LPM definition. Revised description of a Bodied vehicle.
7	06/11/2026	Bodied vehicle (TSE MSVA 029 001) and 250W LPM revised. EAPC added.

This page left intentionally blank.

Driver & Vehicle Standards Agency

Contact us

DVSA
Berkeley House
Croydon Street
Bristol
BS5 0DA

www.gov.uk/dvsa

Telephone: 0300 123 9000
WhatsApp (message only, no calls): +44 (0)1908 787001
Webchat

Monday to Friday, 8am to 5pm
Find out about call charges

Keeping **Britain** moving, **safely** and **sustainably**