LOCATION PLAN 1:250

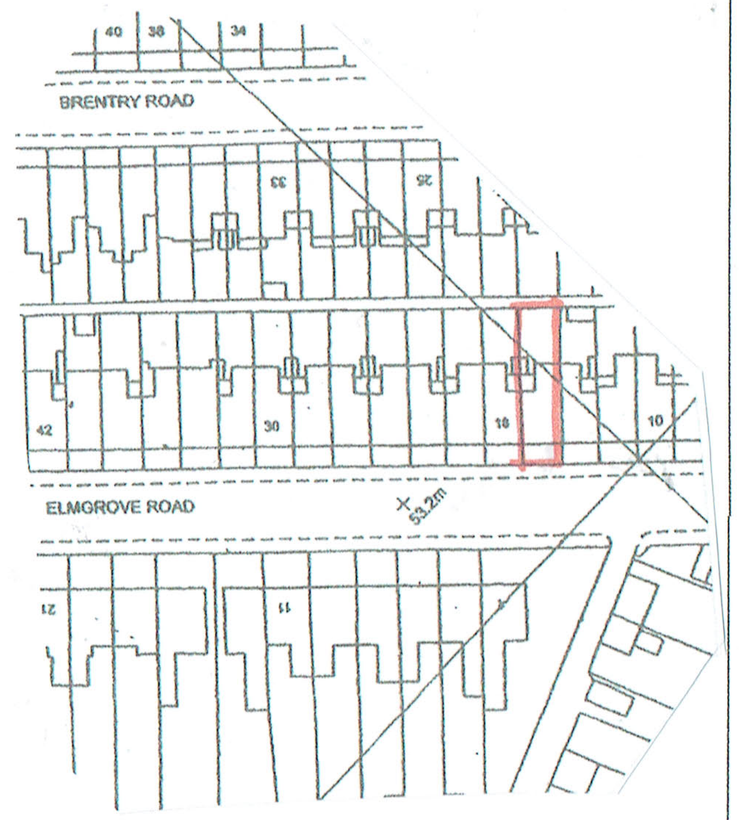

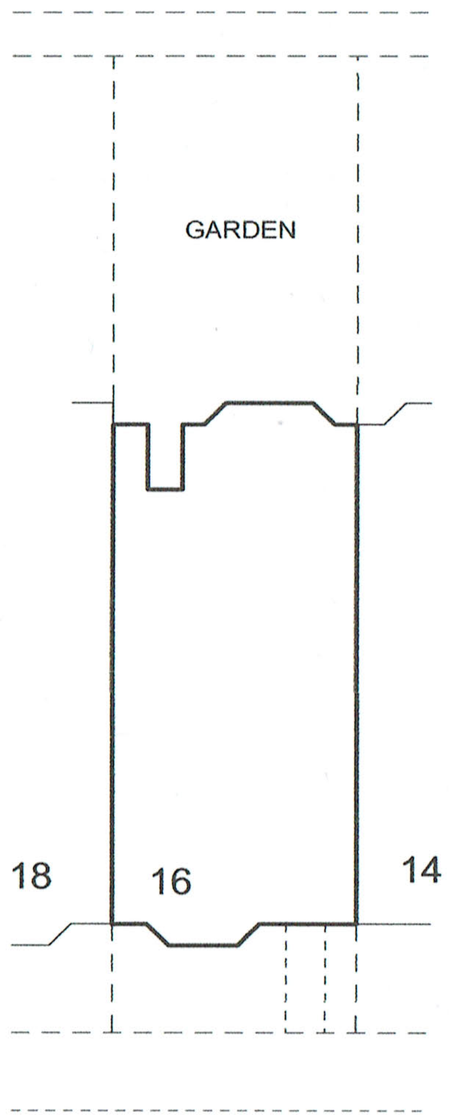

EXISTING SITE PLAN 1:200

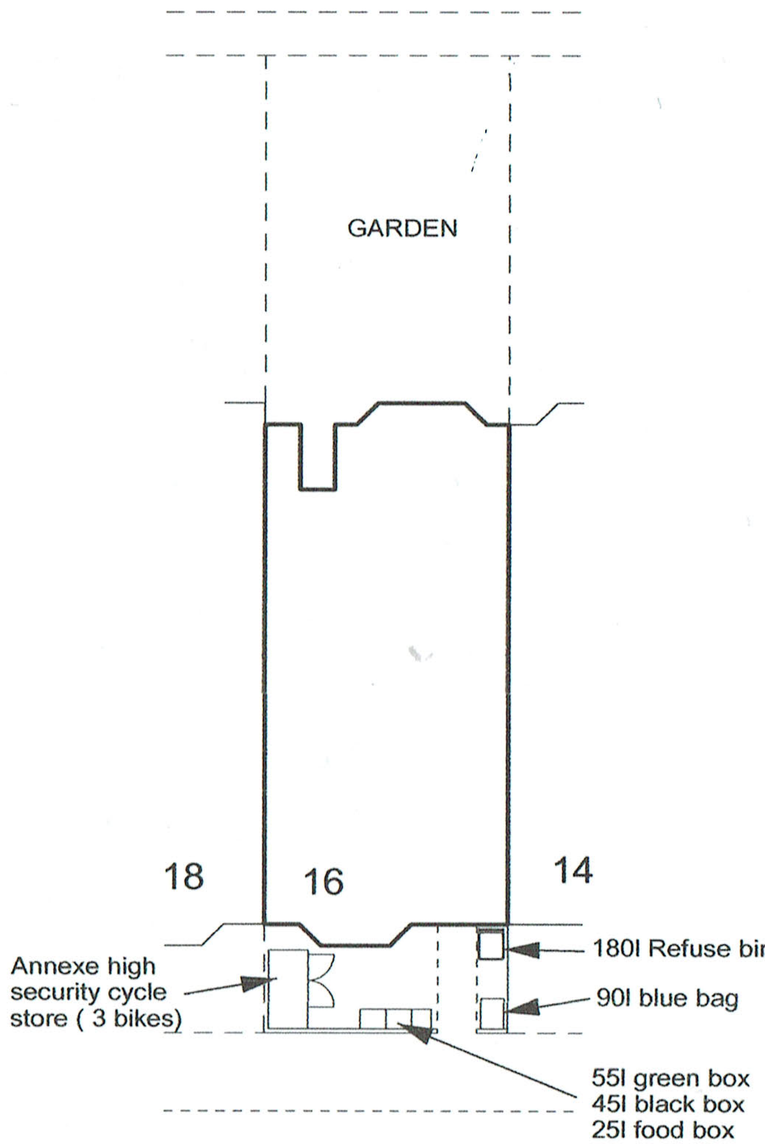

PROPOSED SITE PLAN 1:200

ANNEXE CYCLE STORE
1830mm wide x 920mm deep x 1340mm high in dark green colourcoat metal finish (NTS)

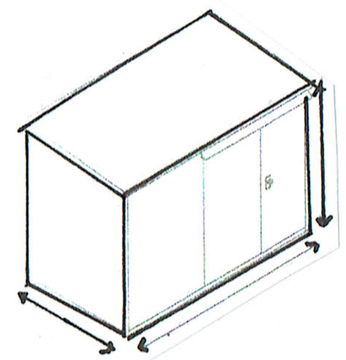

Client
-
[redacted]

Job Title
-
16 Elmgrove Road
Fishponds

Drawing Title
-
Site and location plans

Scale
-
As shown

Date
-
Feb 21

Drawn by
-
BP

Drg No.
-
2116-1

Rev.
-