FIRE SAFETY: BALCONIES, SPANDRELS, AND LAMINATED GLASS
Final report

CPD 004/0120/205

Author: M Spearpoint[1]

Reviewers: D Hopkin[1], J Torero[2], K Chotzoglou[3], L Bisby[4]

[1]OFR, [2]UCL, [3]Efectis, [4]University of Edinburgh

Prepared for the Building Safety Regulator, January 2025

© Crown copyright, 2025 Copyright in the typographical arrangement rests with the Crown. If you wish to reuse this information visit www.hse.gov.uk/copyright.htm for details.

Some images and illustrations may not be owned by the Crown so cannot be reproduced without permission of the copyright owner.

If you have any enquiries regarding this document/publication, email bsrcorrespondence@hse.gov.uk or write to us at: Building Safety Regulator, Health and Safety Executive, Redgrave Court, Merton Road, Bootle, Merseyside, L20 7HS February 2024

Acknowledgments

This project was initiated by the Ministry for Housing and Communities and Local Government (MHCLG) and then completed and published by Health and Safety Executive (HSE) as the Building Safety Regulator (BSR). Its contents, including any opinions and/or conclusions expressed, are those of the authors alone and do not necessarily reflect MHCLG or HSE policy.

Queries on this report should be sent to bsrcorrespondence@hse.gov.uk.

Permission to reproduce extracts from British Standards is granted by BSI Standards Limited (BSI). No other use of this material is permitted. British Standards can be obtained from BSI Knowledge knowledge.bsigroup.com

Contents

1 Introduction 1
1.1 Background 1
1.2 Work programme 2
1.3 Reporting 2
2 Objectives A and B 4
3 Objective C1 6
4 Objective C2 7
5 Objective C3 9
6 Objective C4 10
7 Objective C5 13
8 Objective C6 14
9 Implications 15
9.1 Introduction 15
9.2 Functional requirements of the Building Regulations 15
9.2.1 Fire spread 15
9.2.2 Stability 16
9.2.3 Means of escape 17
9.2.4 Fire service access 17
9.3 Regulation 7 17
9.4 Approved Document B (AD B) 18

1 Introduction

1.1 Background

In June 2017, the Grenfell Tower fire resulted in the death of 72 residents, many others becoming homeless and a wider impact on the local community and the UK housing sector more broadly. The incident also posed a significant challenge to the operational capabilities of the London Fire Brigade. In response to the Grenfell Tower fire, Dame Judith Hackitt conducted an independent review of Building Regulations and fire safety in England where she supported the recommendation to carry out "…*further research with the construction industry to understand who uses Approved Documents, how they are used and where they are used to influence how they should be developed in the future*…". Soon after, the Government through the then Ministry of Housing, Communities & Local Government (MHCLG) introduced an effective ban on combustible materials to the external walls of relevant buildings through changes to Regulation 7 to the Building Regulations in England.

This report contributes to research that forms part of the recommended technical review by the Building Safety Regulator (BSR) at the Health and Safety Executive (HSE)[1] of the Building Regulations and statutory guidance given by Approved Document B (AD B) for fire safety in buildings in England. The research investigates the mechanisms of fire spread between balconies that might be located on the external walls of multi-storey residential buildings. Particular focus is made on the impact of having laminated glass as the balustrade of balconies as the introduction to the changes to Regulation 7 resulted this product not being permitted for this use on relevant buildings (as defined in Regulation 7). The research also examined several other factors of relevance regarding the fire safety of balconies which are summarised in this report and discussed in more detail in the accompanying appendices.

'Building work' is a legal definition for work covered by the Building Regulations in England. Although the guidance given by AD B is generally applied to building work associated with new construction it is important to note that "*Building work and material changes of use subject to requirement B1* [of the Building Regulations] *include both new and existing buildings*." As such, although most of the study is

[1] The research was originally commissioned by the Ministry of Housing, Communities and Local Government (MHCLG), which subsequently became the Department for Levelling Up, Housing and Communities (DLUHC), which then transferred its role to develop and maintain Approved Document B to the Health and Safety Executive (HSE).

assumed to be applicable to new buildings, the work also examined elements related to existing buildings, particularly where AD B gives guidance on the use of a non-combustible soffit to the underside of balcony decks that are made of a combustible material. The application of a soffit may be used as a retrofitting solution to existing buildings.

1.2 Work programme

At the start of the project the work programme associated was broken into three broad objectives. **Objective A** was to carry out a review of the then current research literature, standards and codes, incidents and history of balconies, spandrels and laminated glass. **Objective B** was to examine the current guidance associated with the three topics and **Objective C** was to then generate further knowledge. As the work proceeded it was clear that the three topics had several overlaps and also impacted on other research that was being carried out on behalf of the HSE. In discussion with the HSE during the progress of the work the work programme was modified to the following objectives:

- **Objectives A and B: Review of the use of balconies, spandrels and laminated glass in construction** (Appendix A/B)
- **Objective C1: Balcony fuel load survey** (Appendix C1)
- **Objective C2: Small-scale laminated glass experiments** (Appendix C2)
- **Objective C3: Balcony fire demonstration test methodology and matrix** (Appendix C3)
- **Objective C4: Full-scale balcony fire demonstration tests** (Appendix C4)
- **Objective C5: Preliminary findings from computational fluid dynamics simulations** (Appendix C5)
- **Objective C6: Spandrel zone demonstration test methodology** (Appendix C6)

These objectives broadly followed the initial plan of work. However, the research on spandrels was not progressed as first envisaged, partly because the work would overlap with the separate project on external wall systems (CPD 004/121/108, of which OFR is also the lead partner), and partly to allow this project to have greater focus on the balcony and laminated glass topics.

1.3 Reporting

This study has been carried out by a consortium of partners that has been led by OFR. The majority of the work has been jointly undertaken by members of OFR and Efectis. The responsibility of the members from University of Edinburgh and University College London (UCL) has been to provide internal review and critique of the work. These internal reviews have provided an important role in improving and

clarifying key elements. The contributors and their organisations are identified within the reports contained within each appendix, relevant to the time of writing of the reports. External oversight of the project has been provided by an Expert Review Panel (ERP) consisting of stakeholders from various public and private organisations.

The appendices to this final report are those documents released throughout the research project with some relatively minor editorial and formatting changes. The appendices retain the tenses as they were written at the time rather than being updated to reflect their current status. The earlier documents make reference to work that may or may not have subsequently been carried out as the result of ongoing findings, and feedback from the BSR and the ERP. The research also needed to adapt to various external factors such as newly published documents and events that have occurred over its duration.

Related to the release of the contents of the appendices, several articles have been published in the open literature. As a result of the review process, some of these articles contain updated and or additional content that has not been included in the original documents (i.e., the attached appendices). Further articles may be forthcoming which may again differ from some elements of the work presented here in response to feedback. A list of the published articles and those currently under review is provided below:

1. M. Spearpoint, I. Rickard, 'Laminated glass in balcony balustrades', *International Fire Professional*, 38, 43-51, 2021.
2. M. Spearpoint, I. Rickard, S. Lay, 'Additional perspective on three balcony fire incidents involving glass balustrades', *Fire Technology*, Jul. 2021, doi: 10.1007/s10694-021-01154-6.
3. S. Bryant, I. Rickard. M. Spearpoint. 'A survey of fire loads on private residential balconies in England', *Fire Technology,* 59, 3415–3443, 2023. 10.1007/s10694-023-01467-8
4. Bryant S, I. Rickard, M. Spearpoint, 'Findings from a survey of fire loads on private residential balconies in England', *International Fire Professional*, 48, 39–46, 2024.
5. D. Hopkin, M. Spearpoint, K. Chotzoglou, T. Fateh. 'Analysis of fire exposure to structural elements forming and supporting balconies', CONFAB 2024, London, England, UK, 9–10 Sept 2024.
6. M. Spearpoint, G. Remy, I. Rickard, L. Bisby. 'Reaction-to-fire performance of vertical laminated glass panels with different inter-layer materials when exposed to an external heat flux', submitted to *Fire Safety Journal* (under review)

2 Objectives A and B

Review of the use of balconies, spandrels and laminated glass in construction

Objectives A and B combined work to conduct a scoping study to identify key issues and establish the current state of knowledge on balconies, spandrels, and laminated glass with a review of the current provisions relating to balconies, spandrels and laminated glass in AD B and their effectiveness. Appendix A/B is the result of this phase of the work in which the tasks listed below were completed.

- **Balconies:** The work examined the evolution of balconies throughout the ages from a design and use perspective and then discussed what a modern balcony is and what it can be used for. Balconies that are used as amenity spaces (private and shared) were distinguished from those used as means of escape as they present different challenges from a fire safety perspective.

  The study investigated the main form of construction of modern balconies and details the main components that can be found in balconies. The work lists the different pros and cons of balconies on external fire spread. A review of the building regulations and fire safety guidance applicable across the UK and elsewhere that may have an impact on balcony design was carried out.

  Finally, the balcony section discussed several UK fire incidents associated with balconies and examined some of the available international research into their impact on external fire spread.

- **Spandrels:** The spandrel section focused on what is a spandrel, how is a spandrel zone defined and what is its role in relation to fire safety. It also provided details of the various typologies and details related to panels used in a spandrel zone.

- **Laminated glass:** The section on laminated glass begins with a historical account of the development of laminated glass from the early 1900s and its introduction into building construction. In the context of the use of laminated glass in buildings, a selective review of the various British Standards for its design and application is provided. A summary of the materials used to manufacture laminated glass is given along with a brief discussion on how the glass is mounted in glazing and balustrade systems.

  The section included a review of the literature that has investigated the performance of glass in fire with a focus on laminated glass that aids in identifying the flammability of the product in relation to its use, the materials used to form interlayer/s, configuration, etc.

The section described the fire safety considerations that are relevant to the use of laminated glass. These considerations include the fire separation functions of glazing systems along with reaction-to-fire performance, and the potential for vertical fire spread.

The work provided a set of recommendations for the next steps in the research that included proposals for experimental and numerical investigations. This work was caried out in **Objective C** as described below.

3 Objective C1

Balcony fuel load survey

Objective C1 provided a survey of the fuel load on balconies of 1020 residential buildings in England using images sourced from Google Street View. **Objective C1** also reviewed guidance produced by various organisations regarding the use of balconies and also identified some balcony fires at the time of writing. Additional balcony fire incidents were also noted as part of **Objective A/B**. The key findings from **Objective C1** were:

- Guidance notes produced by London Fire Brigade and insurance companies consider the ideal fuel load on a private residential balcony to be zero, and that balconies should not be used for storage.
- The survey identified the fuel load from a range of balconies throughout the year. Analysis determined an average fuel load energy density (FLED) of 64.4 MJ/m^2, and an 80th percentile of 110 MJ/m^2 for a balcony. Balcony FLEDs within London are 1.6 to 1.7 times higher than the FLEDs outside of London. Comparisons on balcony fuel load were explored including the impact of building height, season, year, and balcony size. It was found that buildings between 18 m and 30 m in height have a statistically significant higher FLED than other heights, and that balconies smaller than 2.5 m^2 have a statistically significant higher FLED than balconies larger than 2.5 m^2. Furthermore, it was found that Social Grade has no statistically significant impact on the average FLED.
- A ‘representative balcony’ was found to have dimensions of 2.85 m wide and of 1.3 m deep. The total fuel load of this representative balcony was 233.7 MJ, where 179.2 MJ is from plastic-based materials, and 54.5 MJ from wooden contents, i.e. the fuel composition by mass on balconies is 60% plastic and 40% wood and has a FLED of 63 MJ/m^2. The average peak heat release rate for the representative balcony was estimated as 105 kW/m^2, with an 80th percentile of 173 kW/m^2 with a Medium growth rate of 0.012 kW/s^2.

Results from **Objective C1** fed into the work conducted as part of **Objective C3** and **Objective C4**.

4 Objective C2

Small-scale laminated glass experiments

Objective C2 was an extensive series of small-scale experiments on the reaction-to-fire performance of vertical laminated glass panels with different inter-layer materials when exposed to an external heat flux. Samples of laminated glass at two sizes, three glass thicknesses, four types of inter-layer material were used in the study. The samples were exposed to three radiant heat fluxes at three exposure locations. Measurements of time to glass shatter, ignition time, and mass loss were recorded along with observations of flame behaviour and dripping inter-layer.

- For panels with PVB and EVA inter-layers the results showed that time to ignition generally increased with glass thickness and did not change significantly whether the heat exposed pane was broken or unbroken prior to heating. Furthermore, the time to ignition with the PVB inter-layer was generally unchanged when heated in one of the three locations (i.e. the top, middle or bottom of the panels). For panels with the SGP inter-layer, times to ignition showed substantial variability both with panel thickness, the initial condition of the exposed pane, and somewhat the heating location.
- Although the SGP was found to have the highest calorific value of the four inter-layer materials, the panels with the PVB inter-layer showed the highest peak heat release rate when compared to panels using the other three laminate types.
- The thickness of the panel (i.e., the thickness of panes of glass) may have had some impact on heat release rate, although the results were generally inconclusive when it came to peak values.
- Breaking the front pane of glass prior to exposure to the radiant heat flux can make a difference to the burning characteristics of a panel in terms of the peak heat release rate, although it did not necessarily result in a more severe fire when assessed in terms of time to ignition or total mass loss.
- Results both in terms of total mass loss and also peak heat release rate suggested that heating the panels in the centre would likely give the highest values when compared to heating at the bottom or at the top.
- The larger laminated glass panels with the PVB and SGP inter-layer generally resulted in a higher peak heat release rate, although the finding was not universal.
- The reaction-to-fire performance of laminated glass with an SGP inter-layer had greater variability when compared to PVB. Among the tested inter-layers,

the PVB inter-layer stood out as having the highest occurrence of flame spread or flame flashing at a higher location when compared to the other inter-layer types.

- Overall panels with the PVB inter-layer showed a faster time to ignition and higher peak heat release rate when compared to panels that used the other three inter-layer types.

Results from **Objective C2** fed into the work conducted as part of **Objective C3** and **Objective C4**.

5 Objective C3

Balcony fire demonstration test methodology and matrix

Objective C3 described the development of the scenarios that led to the full-scale balcony demonstration tests to fulfil **Objective C4**. The scenarios considered the wide range of balcony design parameters that could be investigated but focused on the key ones that BSR had particular interest in, namely the inclusion of laminated glass in the balustrade, the use of timber as a decking material, and the presence of a moveable fuel load. The scenarios also included an assessment of the using a non-combustible soffit to the underside of balconies with combustible decking, which was not part of the scope of the original objectives. Furthermore, as discussed in **Objective C4**, there was a subsequent change to the balcony test programme as the result of the fire that occurred at Hallam Court, Croydon on 7th June 2023.

Objective C3 provided preliminary calculations for the specification of the moveable fire load. The work considered what combustible materials should be used for the decking, and the design of the laminated glass balustrade. An initial design of the test rig and its associated instrumentation was proposed which were subsequently refined as part of **Objective C4**.

6 Objective C4

Full-scale balcony fire demonstration tests

Objective C4 described a series of eight full-scale balcony fire demonstration tests that were carried out by Efectis under their calorimeter in their Belfast laboratory facility. The test series resulted from the work carried out as part of **Objective C3**, and further discussion with BSR and specific members of the ERP associated with glazing specifications and balcony design.

Measurements of heat release rate, gas temperatures and heat fluxes were used to quantify balcony-to-balcony fire spread and compare the eight different balcony configurations. Findings from the tests examine the impact on balcony fire spread of a range of factors including:

- The presence of a moveable fuel load,
- Where a balcony has an exposed timber deck,
- Having laminated glass balustrades,
- The use of a non-combustible soffit on the underside of balconies with a timber deck,
- The likely performance of non-combustible balconies,
- Where combustible balustrades, in particular a HPL panel system, has been used, and
- The implications on lateral fire spread to neighbouring balconies.

In addition to considering fire spread, results from the tests were used to assess the stability of balcony structures under thermal exposure conditions. The findings from the tests were:

- Moveable fire load: The presence of moveable combustible items on balconies can influence fire behaviour, modifying airflow, contributing to heat release, and impacting flame dynamics. These items can enhance upward or downward fire spread through burning or falling materials. Non-combustible items, though not directly involved in combustion, may also affect fire spread by modifying airflow and shielding combustible materials.
- Exposed timber deck: Balconies with non-fire retardant treated exposed timber decks demonstrated poor fire performance. Tests showed rapid fire spread within minutes. Timber decking was identified as the dominant factor in fire spread, more so than the type of balustrade. Smaller gaps between

decking planks might influence fire behaviour, but this aspect was not investigated.

- Laminated glass balustrades: Tests using laminated glass balustrades suggested they do not significantly influence upward fire spread in the early phases of a fire. Laminated glass contributes a small fuel load in comparison to other potential combustibles. The presence of glass can slow the ignition of moveable fuels by separating them from flames extending to the edges of a balcony. The tests represented a worst case in which the bottom edge of the glass was exposed. Dripping, burning laminate could ignite other materials although observations in tests showed that when this occurred the pool fires were small. Placing the laminated glass within a channel may reduce the likelihood of dripping laminate, although this was not examined in the tests. Glass panels could fail and fall, potentially spreading fire downward.
- Non-combustible soffit: Tests of non-combustible soffits showed improved fire performance compared to balconies with exposed timber decks. However, while upward fire spread was slowed, it was not completely prevented.
- Non-combustible balconies: Balconies with non-combustible decks and balustrades are likely to perform better in fire scenarios when compared to those with combustible decks and/or balustrades. Solid balustrades can reduce heat flux to the façade (in a similar way as shown by the laminated glass balustrade tests), lowering the likelihood of igniting the moveable fuel load. The study indicated that solid balustrades may not have a significant impact on flame height but could alter airflow and flame dynamics.
- Combustible balustrades: Combustible balustrades add energy to a fire and increase the likelihood of both upward and downward fire spread. Tests with combustible HPL balustrades showed burning material falling away and contributing to fire spread. The specific behaviour of larger HPL panels or other combustible materials remains uncertain, and further investigation would be needed.
- Lateral fire spread: Lateral fire spread on the same balcony level can occur when flames exit a building's exterior opening and combustible items are nearby. While upward fire spread is generally more influential, lateral spread could be significant for certain balcony configurations with timber decks.
- Stability of balcony structures in fire: The tests revealed that unprotected steel used in balcony structures could reach temperatures associated with structural failure. It is recommended that balconies should either align with the fire resistance period for the building, or achieve 60 min. This will mitigate premature failure in low-rise buildings and enhance the likelihood of structural survival in medium- and high-rise buildings during a fire.
- Fire development: Those balcony configurations in which the heat release rate exhibited a significant increase beyond the contribution of the BS 8414

crib showed an approximately linear growth. Balcony fires differ from enclosure fires since there are not the same heat feedback and ventilation effects taking place. Fires in room-scale enclosures often exhibit an accelerating fire growth and a transition to a fully developed regime following flashover. However, fires on balconies are likely subject to external wind conditions which could change the burning characteristics when compared to typical enclosure fires. The influence of wind was not investigated in this study.

7 Objective C5

Preliminary findings from computational fluid dynamics simulations

The principal aim of **Objective C5** has been to investigate the possibility of benchmarking computational fluid dynamics (CFD) simulations against the results from the full-scale balcony fire demonstration tests in **Objective C4**. The findings from this phase of the research followed on from the completion of the tests and analysis of the results.

The work assessed whether the Fire Dynamics Simulator (FDS) computational fire dynamics (CFD) model could reliably replicate the thermal conditions observed in the full-scale balcony fire tests. The assessment process involved:

- Simulating the same balcony fire conditions in FDS,
- Comparing key outputs such as gas temperatures and radiant heat flux between the FDS simulations and the test data, and
- Considering how refining the simulation parameters might improve the agreement between the FDS predictions and test results.

The work focused on Test A as detailed in **Objective C4**, which served as the baseline scenario with non-combustible balcony floors, open balustrades, and no additional fuel targets. This test was designed to characterise heat fluxes and other fire-related parameters under a simple configuration. The benchmarking of FDS against Test A was important as it will serve as the foundation for any future work on a comparison with the more complex scenarios undertaken in **Objective C4**.

The study highlighted the challenges and implications of simulating the relatively simple balcony fire scenario using FDS. Representing the burning of the BS 8414 wood crib was not a straight-forward process. While the simulations adequately represented certain aspects, such as the heat release rate (HRR), the comparative analysis between the test measurements and simulated data revealed several discrepancies in gas temperature and heat flux predictions. OFR plan to carry on with investigating the performance of FDS outside the BSR project and will look to report its findings through a different means.

8 Objective C6

Spandrel demonstration test methodology

The purpose of **Objective C6** was to propose an experimental programme for the assessment of the spandrel zone, as detailed in **Objective A** and **Objective B.** The work examined options for the design of a test rig, the type of instrumentation that would likely be required, and the configuration of representative façade systems. However, ultimately the work proposed in **Objective C6** did not go ahead as the scope of the balcony demonstration tests expanded through the project timeline and the resources needed to build a specific rig and complete the spandrel zone tests was not available. Furthermore, the proposed tests have the potential to overlap with a separate project being carried out on behalf of BSR on external wall systems (EWS) and it is possible the EWS research will be able to address aspects of spandrel zone performance.

9 Implications

9.1 Introduction

The findings from this research project have potential implications on three key aspects of the fire safety regulatory system in England, namely the functional requirements, Regulation 7, and the statutory guidance given in Approved Document B (AD B). Each of these are discussed in more detail below.

9.2 Functional requirements of the Building Regulations

Given that the Building Regulations in England for building work are expressed in the functional requirements B1 to B5, it is appropriate to consider the findings of this research project in their context. The discussion below suggests that consideration of the functional requirements from the perspective of balconies on the outside of buildings needs a nuanced approach. In addition, it is important to note that balconies have a complicating factor in that they may also have moveable fuel load present which cannot be directly addressed by building work requirements of the regulations as this will be introduced by building users once a building has been completed. The presence of moveable fuel loads is likely to be more relevant to private balconies but cannot be ruled out from access balconies.

9.2.1 Fire spread

The primary requirement that this work relates to is the fire spread associated with balconies. Fire spread can be both external and internal to the building, and also between buildings. Functional requirement ‘B4(1): External fire spread’ states that

> *The external walls of the building shall adequately resist the spread of fire over the walls and from one building to another having regard to the height, use and position of the building.*

Balconies are not specifically ‘external walls’ but, where present, are part of the external envelope of the building and therefore it is appropriate to expect them to also ‘adequately resist the spread of fire’ both over the external envelope and between buildings.

On first inspection one could interpret that functional requirement ‘B2: Internal fire spread (linings)’ and functional requirement ‘B3: Internal fire spread (structure)’ are not directly relevant to balconies as these requirements addresses internal fire spread and a balcony that is on the outside of a building is not ‘internal’. Functional requirement B3(3) states that

Where reasonably necessary to inhibit the spread of fire within the building, measures shall be taken, to an extent appropriate to the size and intended use of the building, comprising either or both of the following—

(a) sub-division of the building with fire-resisting construction;

(b) installation of suitable automatic fire suppression systems.

and functional requirement B2(1) states

To inhibit the spread of fire within the building, the internal linings shall—

(a) adequately resist the spread of flame over their surfaces; and

(b) have, if ignited, either a rate of heat release or a rate of fire growth, which is reasonable in the circumstances.

Depending how 'within a building' is interpreted in the context of balconies then B3(3) might be relevant particularly where private balconies are connected across a compartment line between separate properties. If the application of B3(3) leads to balconies as being within a building then B2(1) also becomes relevant, although it can be argued that B4(1) already addresses the same requirement.

However, the key point is that balconies provide a potential means of storey-to-storey or compartment-to-compartment fire spread, thus potentially affecting compliance with B3(3) and B4(1). A fire could start in a compartment on a storey and then spread to other compartments above, below and/or laterally via balconies as the result of the structure and/or contents associated with those balconies. Similarly, a fire could start on a balcony and spread in a comparable manner. Fires associated with balconies may also provide a mechanism for building-to-building fire spread.

9.2.2 Stability

Functional requirement B3(1) states that

The building shall be designed and constructed so that, in the event of fire, its stability will be maintained for a reasonable period.

Where a balcony is on the outside of a building, its stability can be integral to other building functions and their associated functional requirements, for example B1 and B5(1), as discussed below. Similar to some façade systems, the mechanical failure of balcony components could present a hazard to those below, e.g., evacuating occupants and FRS.

9.2.3 Means of escape

Functional requirement ‘B1: Means of warning and escape’ states that

> *The building shall be designed and constructed so that there are … appropriate means of escape in case of fire from the building to a place of safety outside the building capable of being safely and effectively used at all material times.*

Therefore, where a balcony is used for access then functional requirement B1 is of relevance. The structural stability and any hazard posed by the flammability of materials used to form the balcony need to be addressed to ensure appropriate means of escape remains available. This would include considerations of falling debris and its potential impacts on egress routes.

It is reasonable to conclude that in the case of private balconies, requirement B1 is less significant other than such balconies form an ‘inner room’ when considering means of escape.

9.2.4 Fire service access

Functional requirement ‘B5(1): Access and facilities for the fire service’ states that

> *The building shall be designed and constructed so as to provide reasonable facilities to assist fire fighters in the protection of life.*

The observations regarding functional requirements B1 and B3(1) for balcony access apply to this requirement, as does the more general comment regarding mechanical failure and considerations of falling debris.

9.3 Regulation 7

In addition to the functional requirements of the building regulations, this work also has implications for Regulation 7(2) as it is applied to ‘relevant buildings’. More details of this regulation are covered in **Objectives A and B** (see Appendix A/B-4) however the key component is that Regulation 7(2) currently states:

> *Subject to paragraph (3), building work shall be carried out so that materials which become part of an external wall, or specified attachment, of a relevant building are of European Classification A2-s1, d0 or A1 (classified in accordance with the reaction to fire classification).*

Where Class A1 or Class A2-s1, d0 products do not exist and there are no suitable alternatives, the Regulation includes a list of exemptions, given in Regulation 7(3). Thus, this regulation achieves an in-effect ban on the use of materials and hence products (in and on the external wall zone) that do not meet the reaction-to-fire requirements as set out by the Government.

The exemptions given in Regulation 7(3) do not include where a balcony balustrade is constructed using laminated glass panels (or any other specified materials). As discussed in **Objectives A and B** (see Appendix A/B-28.3)**,** the outcome from European Commission decision 96/603/EC (consolidated 2003/424/EC) and the work previously undertaken by Glass for Europe meant that all laminated glass products are considered Euroclass B when classified by BS EN 13501-1. Over the time this research has taken place at least one processor of laminated glass has released a product that does meet Regulation 7(2), but it is expensive, relatively heavy, and there is a limited capacity to supply the market.

It is beyond the remit of this report to suggest if and how Regulation 7 might be amended. However, as demonstrated in **Objective C4** (see Appendix C4), the research does suggest that the presence of laminated glass with characteristics that represent a reasonable worst case does not make a significant impact on the likelihood of fire spread during the initial phase of a fire. The fuel load introduced by a laminated glass balustrade is likely to be small when compared to the moveable fuel load, and the balustrade may increase the time to ignition of that fuel load by separating it from the flames from below the balcony floor.

As discussed in Section 9.4, there would likely need to be consideration on any impacts of any proposed changes to Regulation 7, the guidance given by AD B, and the relationship with other guidance such as that given by BS 9991 and BS 8579, where relevant.

9.4 Approved Document B (AD B)

Most of the findings from the research project do not have a direct impact on the guidance given in the current (at time of writing 2019 edition (incorporating 2020 and 2022 amendments)) of AD B since it only assigns certain fire safety features to balconies. In general, clauses address the materials and construction of balconies in relation to the functional requirements in B4, and there are a small number of clauses that address Functional Requirement B1 including a reference to clause 7.3 in BS 9991 for common/deck access balconies.

As noted in Section 6, one specific finding from **Objective C4** (see Appendix C4-7.4) that the fire resistance of elements forming or supporting balconies should either align with the fire resistance period for the building or achieve 60 min, whichever is the lesser. It is recommended that a future version of AD B be updated to include this expectation. More generally it is possible to contemplate where the guidance in AD B could be amended in relation to balconies, noting that this research project does not address whether such changes are necessary, nor to what level, if such changes were believed to be necessary. Any changes would need to be cognisant of the relevant requirements specified by Regulation 7 and BS 9991 depending on if and how those are updated. Some examples are as follows:

- Moveable fire load: AD B (nor the Building Regulations) cannot directly exert influence on the moveable fire load present on a balcony after construction. Where there might be particular concern, such as on access balconies, then The Regulatory Reform (Fire Safety) Order and/or the Building Safety Act 2022 could have relevance on the control of items, or other mechanisms such as leasehold contracts etc. However, if the intention is to allow building occupants to use their private balconies in a reasonable manner there needs to be an acceptance that some amount of fire load will be present.

- Combustibility: Where the hazard posed by the combustibility of the materials associated with balconies other than residential buildings with a storey 11 m or more in height be of concern then clause 12.11 / clause 10.10 in the two volumes of AD B could be extended to cover other occupancy types and or building heights. It might be argued that restricting balconies on low-rise, low occupant buildings might be unnecessary as the risks may be sufficiently low.

- One of the balcony provisions in AD B (clause 10.10 b. in Volume 1 and clause 12.11 b. in Volume 2) relates to the use of a non-combustible soffit and Class B materials in the line of compartment walls to mitigate lateral fire spread. Beyond that, however, there are no limitations on either the deck or balustrade flammability. The test with the HPL balustrade presented in **Objective C4** (see Appendix C4-5.8) showed that the benefit of a soffit can be undermined by a highly combustible balustrade and, therefore, some consideration could be given to prescribing some minimum reaction-to-fire classification for materials forming balustrades.

- Balcony arrangement: Should the hazard posed by fire spread vertically and/or horizontally between separated balconies be deemed to be unacceptable then AD B could present provisions to restrict the spacing between balconies. This could be in the form of minimum distances between the floors/ balustrades. These distances could be dependent on the construction materials used, although that would likely introduce additional complexity. Alternatively, if separation was not an option, balconies could be separated by fire-resisting construction.

- Building separation: Similar to the issue of fire spread between balconies associated with a given building, the question of fire spread between buildings from balconies and/or external walls (balcony to balcony, wall to balcony, etc.) could be specifically accounted for in AD B by appropriately updating Section B4. Currently, guidance exists for canopies that could be extended to include specific consideration of balconies.

- BS 8579: As noted in **Objectives A and B**, there is no mention of BS 8579: 2020 ‘Guide to the design of balconies and terraces’ within AD B at the time that objective was completed, nor at the time of writing this final report. It is

beyond the scope of this discussion to fully review BS 8579, but an option exists for AD B to adopt all, or parts, of this standard (as Volume 1 of AD B has done in the case of BS 9991).

It must be noted that any changes to one part of AD B could have positive (or negative) implications to another part. For example, including minimum spacing provisions could allow balconies to be constructed with more combustible materials. However, changes to AD B would need to be considered in view of any impact they might have on the way that balconies are designed, constructed, and used, along with the many legacy buildings that already exist.

APPENDIX A/B:
Review of the use of balconies, spandrels and laminated glass in construction

Authors: M Spearpoint[1], M Rapenne[2], M Dadashzadeh[2], A Law[3], I Rickard[1]

Reviewers: J Torero[4], L Bisby[3], D Hopkin[1]

[1]OFR, [2]Efectis, [3]University of Edinburgh, [4]UCL

Part A: M Rapenne, M Dadashzadeh
Part B: A Law
Part C: I Rickard
Part C and Introduction, etc.: M Spearpoint

Contents

A/B-1. Overview ... 1
A/B-2. Methodology ... 3
A/B-3. Regulatory context ... 4
A/B-3.1 Introduction ... 4
A/B-3.2 Fire safety ... 4
A/B-3.3 Falling and impact ... 4
A/B-3.4 Standardised testing methods ... 5
A/B-4. Post-Grenfell Tower ... 7
Part A: Balconies ... 10
A/B-5. Background ... 10
A/B-6. Historical purposes and evolution ... 11
A/B-7. Modern balcony: Definition, types and role ... 14
A/B-7.1 Definitions ... 14
A/B-7.2 Private vs. shared balconies ... 16
A/B-7.2.1 Private balconies ... 16
A/B-7.2.2 Shared balcony ... 17
A/B-7.3 Balconies as means of access/egress ... 18
A/B-7.4 Boundary system – open vs. enclosed balconies ... 18
A/B-8. Balcony construction methods ... 20
A/B-8.1 Introduction ... 20
A/B-8.2 Projecting balcony ... 20
A/B-8.3 Hung balcony ... 21
A/B-8.4 Self-supporting balcony ... 22
A/B-8.5 Recessed balconies ... 22
A/B-8.6 Juliet balcony / guarding ... 23
A/B-8.7 Conclusion ... 24
A/B-9. Challenges in designing and building balconies ... 25
A/B-9.1 Materials and components of balconies ... 26
A/B-9.1.1 Structure ... 26
A/B-9.1.2 Balustrades and separation screens ... 26
A/B-9.1.3 Decking ... 27
A/B-9.1.4 Fixings ... 27
A/B-9.1.5 Insulation ... 27

A/B-9.1.6 Thermal bridging 27
A/B-9.1.7 Waterproofing 29
A/B-9.1.8 Fire stopping and cavity barriers 30
A/B-9.1.9 Conclusion 31
A/B-9.2 Interfaces and responsibilities 31
A/B-9.3 Distribution 31
A/B-9.4 Green balconies 32
A/B-10. Effects of fire spread and fire performance 33
A/B-10.1 The cons 33
A/B-10.2 The pros 35
A/B-11. Past fires 36
A/B-11.1 Introduction 36
A/B-11.2 Conclusion 41
A/B-12. Balconies in building regulations and fire safety guidance 43
A/B-12.1 Building Regulations 2010 (as amended) 43
A/B-12.1.1 B1: Means of warning and escape 43
A/B-12.1.2 B3: Internal fire spread (structure) 44
A/B-12.1.3 B4: External fire spread 44
A/B-12.1.4 B5: Access and facilities for the fire service 45
A/B-12.1.5 Regulation 7 – Materials and workmanship 45
A/B-12.2 Approved Document B (AD B) 46
A/B-12.3 BS 9991: Fire safety in the design, management and use of residential buildings 48
A/B-12.4 BS 8579: Guide to the design of balconies and terraces 50
A/B-12.5 BS 9251: Fire sprinkler systems for domestic and residential occupancies .. 51
A/B-12.6 International approaches 51
A/B-12.6.1 Separation of openings to limit fire spread 51
A/B-12.6.2 Reaction-to-fire 54
A/B-13. Review of research literature 55
A/B-13.1 Fire statistics 55
A/B-13.2 Balcony contribution to external fire spread 55
A/B-13.3 Conclusion 58
A/B-13.4 Open vs. enclosed balcony 60
A/B-14. Overview of fire standards applicable to balconies 61
A/B-14.1 Structural fire resistance, R 61

A/B-14.2 Insulation, I, and integrity, E ... 61
A/B-14.3 Reaction-to-fire ... 62
A/B-14.4 Overall contribution to external fire spread ... 62
A/B-15. Conclusion ... 63
Part B : Spandrels ... 66
A/B-16. Summary ... 66
A/B-17. What is a spandrel? ... 68
A/B-17.1 Historical uses ... 68
A/B-17.2 Changing meaning ... 69
A/B-17.3 Contemporary usage ... 74
A/B-17.4 Notable fire events ... 76
A/B-18. Role of the spandrel zone ... 77
A/B-18.1 Codification ... 77
A/B-18.2 De-codification ... 78
A/B-18.3 A new status quo ... 82
A/B-18.4 Periodic review ... 83
A/B-18.5 Loss Prevention Council review ... 85
A/B-18.6 International perspectives ... 85
A/B-18.7 Summary ... 88
A/B-19. The fire strategy ... 89
A/B-19.1 Delay time ... 89
A/B-19.1.1 Reaction-to-fire ... 89
A/B-19.1.2 Fire resistance and restraint ... 90
A/B-19.1.3 Summary ... 91
A/B-19.2 Warning and escape ... 91
A/B-20. Typologies and details ... 94
A/B-20.1 Built-up wall vs curtain wall ... 94
A/B-20.2 Built-up wall ... 95
A/B-20.2.1 Restraint ... 96
A/B-20.2.2 Fire stopping ... 96
A/B-20.2.3 Cavity barriers ... 96
A/B-20.3 Curtain wall ... 97
A/B-21. Conclusions on the spandrel ... 99
A/B-21.1 Critical appraisal ... 99
A/B-21.2 Defining the spandrel zone ... 99

A/B-21.3 Recommendations 100
Part C : Laminated glass 102
A/B-22. Introduction 102
A/B-23. Definitions 104
A/B-24. Glass in construction and transportation 105
A/B-24.1 Monolithic glass 106
A/B-24.1.1 Early history 106
A/B-24.1.2 Modern developments 108
A/B-24.2 Laminated glass 109
A/B-24.2.1 Introduction 109
A/B-24.2.2 Transportation 109
A/B-24.2.3 Construction and architecture 111
A/B-24.3 Recent drivers for the use of laminated glass 113
A/B-24.3.1 Provision of balconies 113
A/B-24.3.2 Failure of monolithic glass panels 114
A/B-24.3.3 SCOSS alert December 2019 115
A/B-24.3.4 Industry led risk reduction 116
A/B-25. Standards 117
A/B-25.1 Fire Safety Standards 117
A/B-25.1.1 CP 3 117
A/B-25.1.2 CP 153 117
A/B-25.1.3 BS 5588 118
A/B-25.1.4 PD 6512 119
A/B-25.1.5 BS 9999 120
A/B-25.2 Glass, glazing and balcony standards 121
A/B-25.2.1 CP 152 121
A/B-25.2.2 BS 6206 and BS EN 12600 122
A/B-25.2.3 BS 6262 122
A/B-25.2.4 BS 6180 123
A/B-25.2.5 BS 8579 123
A/B-25.3 European Commission decision 96/603/EC (consolidated 2003/424/EC) ... 124
A/B-25.4 International codes 125
A/B-25.4.1 Australia 125
A/B-25.4.2 Canada 125
A/B-25.4.3 International Building Code 126

A/B-25.4.4 New Zealand 126
A/B-25.4.5 Conclusion 126
A/B-26. Materials and manufacture 127
A/B-26.1 Glass 127
A/B-26.2 Laminated glass 127
A/B-26.3 Interlayer materials 128
A/B-26.4 Films 129
A/B-26.5 Fixing and support 129
A/B-27. Review of research and testing 133
A/B-27.1 Published academic research 133
A/B-27.1.1 Glass breakage 133
A/B-27.1.2 Laminated glass 133
A/B-27.1.3 Film-backed glass 135
A/B-27.2 Industry-led fire safety experiments on laminated glass 135
A/B-27.2.1 Glass and Glazing Federation report 136
A/B-27.2.2 Sapphire Balconies report 136
A/B-27.3 Summary of existing research 137
A/B-28. Fire safety considerations 138
A/B-28.1 Introduction 138
A/B-28.2 Fire separation and fire resistance testing 138
A/B-28.3 Euroclass assessments 139
A/B-28.4 Modern laminated glass 140
A/B-28.5 Fire incidents 141
A/B-28.5.1 Statistical information 141
A/B-28.5.2 Qualitative review of balcony fire incidents 142
A/B-28.6 Understanding external fire spread involving laminated glass 143
A/B-29. Conclusions 149
Part D : Recommendations 151
A/B-30. Further work 151
A/B-30.1 Balconies 151
A/B-30.2 Spandrels 152
A/B-30.3 Laminated glass 152
A/B-30.4 Combination of elements 153
A/B-31. References 155
Appendix I 166

Figures

Figure A/B-1 Medieval hourd 11
Figure A/B-2 Typical modern Juliet balcony 12
Figure A/B-3 Apartments since modified with balcony access originally designed by Bauhaus architectural school 13
Figure A/B-4 Balcony definition, reproduced from BS 8579:2020 15
Figure A/B-5 Open (left) and enclosed (right) types of balconies 19
Figure A/B-6 Projecting balcony 20
Figure A/B-7 Steel cantilever balcony design 21
Figure A/B-8 Wood joists for cantilevering a balcony 21
Figure A/B-9 A hung balcony using a stainless rod 22
Figure A/B-10 Different types of balconies used in the UK 23
Figure A/B-11 Balcony with glass panes supported on metal posts 27
Figure A/B-12 Thermal break shown on the connection of a balcony 28
Figure A/B-13 Balcony waterproofing – section view 30
Figure A/B-14 Cavity barrier and fire stopping 31
Figure A/B-15 Example of green balconies - Urban Forest, South Brisbane 32
Figure A/B-16 Projecting balconies and protection from fire 34
Figure A/B-17 External fire spread – Benefit of balconies in external fire spread – example of a fire in Berlin 35
Figure A/B-18 Extract from Diagram 8.1 of AD B 47
Figure A/B-19 BS 9991 specifications – Alternative means of escape available 49
Figure A/B-20 BS 9991 specifications – alternative means of escape available 49
Figure A/B-21 Vertical separation of openings to limit fire spread – Horizontal vs. vertical separation 52
Figure A/B-22 An arch of Old Westminster Bridge, c. 1750, Samuel Scott, ... 69
Figure A/B-23 Extracts from Freitag, (a) Spandrel at American Surety Company Building; and (b) spandrel at the Reliance Building 70
Figure A/B-24 (a) Spandrel panel in a curtain wall; (b) Spandrel beam at slab edge 72
Figure A/B- 25 Spandrel panel in a precast concrete wall 73
Figure A/B-26 Illustration showing infill panels in the location of the slab edge 76
Figure A/B-27 Extract from (a) The Architectural Forum ridiculing the logic of the fire resisting spandrel; and (b) from Fire Research Note 8 showing the ‘assumed’ and ‘actual’ effect of the fire resisting spandrel wall 79
Figure A/B-28 Extract from the Building Regulations 1965 80
Figure A/B-29 Extract from Fire Research Note 8 showing the main functions of the external wall as assumed by Langdon Thomas and Law 80

Figure A/B-30 Extract from Fire Research Note 8 showing (a) ignition will not occur within 15 minutes (b) that the absence of fire resistance will not reduce the fire safety of a building 81
Figure A/B-31 Extract from diagram 8.1 V1 AD B 91
Figure A/B-32 Distinction between a built-up wall, and a curtain wall 95
Figure A/B-33 Indicative examples of the several possible configurations for a built-up wall 96
Figure A/B-34 Indicative arrangement of cavity barriers in a built-up wall 97
Figure A/B-35 Curtain wall systems, (a) stick systems; and (b) unitised systems. 98
Figure A/B-36 Use of glass in buildings 105
Figure A/B-37 Example of a crown glass window, Ghent, Belgium 106
Figure A/B-38 Charles Burton's proposed design for a 1000 ft tower using material recycled from The Crystal Palace 107
Figure A/B-39 Example decision tree for balconies to apartments 114
Figure A/B-40 Balcony balustrade glass fixing methods 130
Figure A/B-41 Glass Juliet guarding fixing methods 131
Figure A/B-42 Glass curtain wall point fixing systems 132
Figure A/B-43 Potential fire spread events for laminated glass used as a balcony balustrade 148

Tables

Table A/B-1 Performance criteria relating to elements of construction which are assessed in furnace testing 6
Table A/B-2 Past fire incidents on balconies 37
Table A/B-3 Horizontal projection to limit fire spread – International perspective 53
Table A/B-4 Reaction-to-fire of balconies for buildings with at least 3 floors 54
Table A/B-5 Literature review summary 59
Table A/B-6 International approaches to the spandrel zone 87
Table A/B-7 Fire performance properties of glass (excluding fire resistance), Table 1 PD 6512 120
Table A/B-8 Fire performance properties of glass (excluding fire resistance), Table 2 BS 6262 123

A/B-1. Overview

This report provides the first stage deliverable in a project that investigates the potential impact of the use of balconies, spandrels and laminated glass in buildings. This project forms part of further research by MHCLG* to provide evidence on which to consider any potential future technical changes to Approved Document B (AD B) and Regulation 7. The objectives of this reporting stage are to identify: what are we building with? why are we building with it? how long have we been building like this? and how might things develop in the future? It also examines existing national and international guidance; findings from relevant MHCLG calls for evidence; interdependency of fire safety and other building performance requirements; and a gap analysis for further knowledge generation.

This report is the result of an on-going survey of stakeholder groups, one-to-one interviews with key participants, and reviews of the literature to capture the current technologies that are used by industry in relation to balconies, spandrels and laminated glass. This survey provides a method to begin to categorise the various construction typologies, the variability of components within categories, and also make inferences about the relevance of current technology in relation to historical fire incidents identified during the project.

It is important to recognise that balconies, spandrels, and laminated glass are design components associated with the external walls of buildings that enhance the functionality of buildings for reasons that are not only directly linked to fire safety considerations. Nevertheless, each component may have profound implications for the performance of a building during a fire. The components may contribute to the source of the fire, they may become the target of a fire, but they may also provide a means to mitigate the effects of a fire. Although the components may be viewed as isolated elements, in practice the three are linked by the role they may play in supporting, or undermining, the fire safety strategy for a building through their impact on fire spread. At this stage of the project, this report is split into sections that cover the three topics of interest. Invariably there is some overlap between the sections and as the project develops these common elements will be drawn together. In addition, a final section is included in this report that provides recommendations for follow-up work that results from the findings so far.

Part A first looks at the evolution of balconies throughout the ages from a design and use perspective. Then, the reports analyses what a modern balcony is and what it can be used for. It distinguishes balconies that are used as amenity spaces (private and shared) from the ones used as means of escape as they present different challenges from a fire safety perspective. It also differentiates between open and enclosed balconies. Section A/B-8 analyses the main form of construction of modern balconies and identifies the most common ones. The report then details the main component that can be found in balconies and the associated design challenges. Section A/B-10 lists the different pros and cons of

* The research was originally commissioned by the Ministry of Housing, Communities and Local Government (MHCLG), which subsequently became the Department for Levelling Up, Housing and Communities (DLUHC), which then transferred its fire safety responsibilities to the Health and Safety Executive (HSE).

balconies on external fire spread, then Section A/B-11 reviews fires associated with balconies that have occurred, mainly in the UK. Part A reviews the Building Regulations and fire safety guidance applicable in the UK and elsewhere that may have an impact on balcony design. Finally, the last section looks at international research into the impact of balconies on external fire spread.

Part B focuses on spandrels and in-fill panels. Sections A/B-17, A/B-18 and A/B-21.2 cover what is a spandrel, how is a spandrel zone defined and what is its role in relation to fire safety. This part of the report also provides details of the various typologies and details in Section A/B-20.

In Part C of this report a historical account of the development of laminated glass from the early 1900s and its introduction into building construction is given in Section A/B-24. In the context of the use of laminated glass in buildings, a selective review of the various British Standards for its design and application is also provided in Section A/B-25. A summary of the materials used to manufacture laminated glass is given in Section A/B-26 along with a brief discussion on how the glass is mounted in glazing and balustrade systems. The report includes a review of the literature that has investigated the performance of glass in fire with a focus on laminated glass that aids in identifying the flammability of the product in relation to its use, the materials used to form interlayer/s, configuration, etc. Section A/B-28 describes the fire safety considerations that are relevant to the use of laminated glass. These considerations include the fire separation functions of glazing systems along with reaction to fire performance, including the potential for vertical fire spread. Finally, some conclusions and a roadmap for further research are given in Section A/B-29.

The final section (Part D) provides a set of recommendations for the next steps in this project that includes proposals for experimental and numerical investigations.

A/B-2. Methodology

Work to support this report has involved several industry experts being contacted either individually or as part of group sessions. Some of the experts are members of the project Expert Review Panel (ERP) or are names that have been suggested by ERP members. As a result of the Covid-19 pandemic, and following government guidelines, most of the contact was made through video conference calls although some limited face-to-face meetings were possible. Notes from those meetings were collated and these have been used as part of the information provided in this report. However, the names of individuals and/or organisation have not been attributed.

As part of this project, an extensive literature review has been completed. The literature search included reviewing current and historical standards, research papers published in peer-reviewed journals and conferences, books, industry periodicals, web-based resources, and news and opinion articles in the press. The literature has been searched using web-based tools such as Google Scholar and Scopus using appropriate keywords and examining material that the authors already were aware of or had access to from their own personal resources. The citation lists of these resources were then used to identify further material of interest. There is no guarantee that every relevant document has been found and so the authors would be happy to receive any additional material.

In general, statistical data regarding fires that are associated with balcony, spandrel and/or laminated glass fires are difficult to obtain. For example, the Home Office Dwelling Fire Dataset (Home Office, 2017) does not hold information on these specific elements, and it is a similar case for the West Midlands Fire Service dataset that has been used to study the location of dwelling fires (Spearpoint and Hopkin, 2020). Some limited ad-hoc data is available from other sources but of the three elements this is only related to balcony fires. Some specific incidents are mentioned in the press, again primarily related to balcony fires and some of these incidents are summarised in the report.

Throughout this work it has been difficult to maintain a consistent terminology. Each of the parts of the report give some background to the specific definitions but often the meanings vary across industry. Even when it comes to describing the buildings in which people live, terms such as dwellings, homes, houses, flats, apartments are often used synonymously.

A/B-3. Regulatory context

A/B-3.1 Introduction

Buildings in the UK are subject to the statutory requirements set by the appropriate national government bodies through regulatory instruments. Amongst other things, these regulations address the fire safety, protection against falls, structural performance, accessibility, energy performance, acoustic performance of new buildings and those undergoing certain changes. Of particular interest to this project are fire safety and protection against falls requirements, although there is interaction between these and other parts of the regulations.

A/B-3.2 Fire safety

Fire safety regulations address the design, construction and subsequent operation of buildings so as to protect the lives of people in and around buildings and to enable fire and rescue services to effectively and safely carry out their operations. Fire and rescue operations will include protecting neighbouring property from the effects of fire. The regulations are generally expressed in terms of performance-based functional requirements that are broadly the same in each country forming the UK.

In England, the functional fire safety requirements are expressed in Schedule 1 of The Building Regulations 2010 (HM Government, 2019a) as means of escape (B1), internal fire spread (B2 and B3), external fire spread (B4) and fire brigade intervention (B5). Specific to the discussion herein, B4 requires that external walls of buildings adequately resist the spread of fire over the walls and from one building to another. Statutory guidance is provided in two volumes of Approved Document B (HM Government, 2020), (HM Government, 2019b) but designers are free to adopt alternative methods to meet the Regulations. However, as discussed in Section A/B-4, recent changes to the Building Regulations primarily resulting from concerns raised following the Grenfell Tower fire mean that certain (relevant) buildings must satisfy a prescriptive regulatory requirement alongside the existing functional requirements. This additional prescriptive requirement governs the choice of materials used in the construction of external walls with the objective of (further) mitigating external fire spread via the building envelope. Given the significant impact of the Grenfell Tower fire on the understanding and perception of fire safety of buildings in England (and more generally across the UK) further changes to the regulations and statutory guidance are expected follow.

A/B-3.3 Falling and impact

The Building Regulations across the UK have had requirements for glazing subjected to human impact since the early 1990s. Currently in England, Part K of Schedule 1 to the Building Regulations 2010 states:

K4 – Glazing, with which people are likely to come into contact whilst moving in or about the building shall:

(a) if broken on impact, break in a way which is unlikely to cause injury; or

(b) resist impact without breaking; or

(c) be shielded or protected from impact.

Similarly, Mandatory Standard 4.8(b) in Scotland requires that:

Fixed glazing in the building is not vulnerable to breakage where there is the possibility of impact by people in, and around, the building.

To meet the Buildings Regulations 1991, statutory guidance was given in Approved Document N (Glazing Safety) until it was withdrawn in England in 2013. Thereafter the functional requirements and technical guidance were moved into Approved Document K (Protection from falling, collision and impact) (HM Government, 2013). The current edition of Approved Document K calls up BS EN 12600 and BS 6206 which are discussed in Section A/B-25.2.2. Approved Document N still exists in Wales through the current 2017 edition.

A/B-3.4 Standardised testing methods

Although this report later provides details on specific standardised tests on the fire safety performance of materials and products there are particular tests that are of relevance across the three areas of interest. Specifically, these tests are BS EN 13823 'Reaction to fire tests for building products. Building products excluding floorings exposed to the thermal attack by a single burning item', often referred to as the Single Burning Item or SBI test, and BS EN 1364 'Fire resistance tests for non-loadbearing elements'. These tests are presented as the current assessment approaches although the authors do not necessarily subscribe to the methods, objectives or performance assessment metrics.

Results from the BS EN 13823 test are used (although not uniquely) to classify the reaction-to-fire performance of a product according to BS EN 13501-1. There are seven reaction-to-fire classifications that evaluate how much (if any) a material potentially contributes to the development of a fire. Broadly speaking the classifications can be broken into three groups where A1 and A2 are non-combustible materials; B, C and D ranges from very limited to medium contribution to fire; and E and F give a high contribution to fire. In addition, BS EN 13501-1 gives a three-tier classification on the level of smoke production that goes from Class s1 to s3 and also a three-tier classification for the production of flaming droplets during combustion that goes from d0 to d2. Classification to BS EN 13501-1 is often referred to as the 'Euroclass' system.

The ability of an element of construction to achieve a fire resistance rating is determined by standard furnace testing following the ISO 834 temperature time curve and BS EN 13501-2 defines the performance classification. In general, there are three criteria that can be applied to an element of construction: namely load bearing capacity (R), integrity (E) and insulation (I), see Table A/B-1. Not all three criteria are necessarily applied to all type of construction element. For each criterion, a rating is defined in terms of minutes varying from 15 min to 240 min. As an example, a fire door may have a rating of EI 30 which means it

can achieve the insulation and integrity criteria for a duration of 30 minutes when tested in this standard test. However, it is important to be aware that elements of construction may perform for longer or shorter durations in a real fire incident depending on the specific fire environment, the physical boundary conditions and the context within which the element resides.

Prior to the adoption of BS EN 13823 and BS EN 13501-1 the fire performance of building products across the UK were assessed against various parts of the BS 476 standard. The parts included BS 476 Part 4 and BS 476 Part 11 as methods for determining the combustibility of building materials, BS 476 Part 8 to determine the fire resistance of elements of building construction. A full review of BS 476 is not presented in this report.

Table A/B-1 Performance criteria relating to elements of construction which are assessed in furnace testing

Performance criteria	Notation	Comments
Load bearing capacity	R	Ability of the element of construction to withstand fire exposure under specified mechanical actions, on one or more faces, for a period of time, without any loss of structural stability
Integrity	E	Ability of the element of construction that has a separating function, to withstand fire exposure on one side only, without the transmission of fire to the unexposed side as a result of the passage of flames or hot gases
Insulation	I	Ability of the element of construction to withstand fire exposure on one side only, without the transmission of fire as a result of significant transfer of heat from the exposed side to the unexposed side.

A/B-4. Post-Grenfell Tower

Following the events on the 14th June 2017 the government has initiated a range of activities to address the fire safety of buildings, and in particular high-rise residential buildings. These activities have included Dame Judith Hackitt's independent review of the Building Regulations and fire safety in England, several calls for evidence in respect to guidance and regulations, proposing and enacting changes to statutory instruments that affect the Building Regulations, and the setup of the Grenfell Tower Inquiry headed by Sir Martin Moore-Bick. Appendix A of this report presents a timeline of these initiatives to date and links to the appropriate documents or hosting webpages.

In her 2018 review of the Building Regulations and fire safety following on from the Grenfell Tower fire, Dame Judith Hackitt (Hackitt, 2018) noted that:

> "*The new regulatory framework must be simpler and more effective. It must be truly outcomes-based (rather than based on prescriptive rules and complex guidance)…*" and then goes on to say "*This approach also acknowledges that prescriptive regulation and guidance are not helpful in designing and building complex buildings, especially in an environment where building technology and practices continue to evolve, and will prevent those undertaking building work from taking responsibility for their actions*".

However, that same year the Government's response to the Grenfell Tower fire set out its intention "*to ban the use of combustible materials on the external walls of high-rise residential buildings, subject to consultation*". A public consultation was launched in June 2018 and concluded in August 2018 with the introduction of a new prescriptive regulation in December 2018 through the Building (Amendment) Regulations (2018). The scope of the regulation was to those buildings where the normal strategy for evacuation tends to be delayed and/or where the occupants of the building are most vulnerable.

As part of the regulation changes in December 2018 a new definition for an 'external wall' was also added to Regulation 2 (HM Government, 2018) which states:

(a) any reference to an "external wall" of a building includes a reference to—

- *(i) anything located within any space forming part of the wall;*
- *(ii) any decoration or other finish applied to any external (but not internal) surface forming part of the wall;*

Then Regulation 7(2) states:

> *Building work shall be carried out so that materials which become part of an external wall, or specified attachment, of a relevant building are of European Classification A2-s1, d0 or A1, classified in accordance with BS EN 13501-1:2007+A1:2009 entitled "Fire classification of construction products and building elements. Classification using test data from reaction to fire tests" published by the British Standards Institution on 30th March 2007 and amended in November 2009.*

Where products for which a Class A1 or Class A2-s1, d0 does not exist and there is no suitable alternative, the regulation includes a list of exemptions, given in Regulation 7(3) as:

a) *Cavity trays when used between two leaves of masonry;*
b) *Any part of a roof (other than any part of a roof which falls within paragraph (iv) of regulation 2(6)) if that part is connected to an external wall;*
c) *Door frames and doors;*
d) *Electrical installations;*
e) *Insulation and water proofing materials used below ground level;*
f) *Intumescent and fire stopping materials where the inclusion of the materials is necessary to meet the requirements of Part B of Schedule 1;*
g) *Membranes;*
h) *Seals, gaskets, fixings, sealants and backer rods;*
i) *Thermal break materials where the inclusion of the materials is necessary to meet the thermal bridging requirements of Part L of Schedule 1; or*
j) *Window frames and glass.*

Regulation 7(2) applies to the following buildings as detailed in Regulation 7(4):

a) *A "relevant building" means a building with a storey (not including roof-top plant areas or any storey consisting exclusively of plant rooms) at least 18 metres above ground level and which—*
    i. *Contains one or more dwellings;*
    ii. *Contains an institution; or*
    iii. *Contains a room for residential purposes (excluding any room in a hostel, hotel or boarding house).*
b) *"above ground level" in relation to a storey means above ground level when measured from the lowest ground level adjoining the outside of a building to the top of the floor surface of the storey."*

Thus, this regulation achieves an in-effect ban on the use of materials that do not meet the reaction-to-fire requirement as set out by the Government.

As part of the introduction of the new regulation, there is a commitment to review it annually (*Explanatory memorandum to the Building (Amendment) Regulations 2018*, 2018) where MHCLG published a consultation document in January 2020. A number of changes were proposed in the consultation that include adding hotels and hostels to the buildings included within scope; lowering the trigger height from 18 m down to 11 m or removing the height limit entirely; banning metal composite panels with a polyethylene core on any building irrespective of purpose and height; reviewing whether the scope of attachments be altered; and updating the list of exemptions. Of particular relevance to this project was whether laminated glass in balcony construction should continue to be within scope of the in-effect ban and therefore have to achieve Class A2-s1, d0 classification or A1 to BS EN 13501. At the time of writing, results of this consultation have not been published.

Notwithstanding the changes to Regulation 7, MHCLG regard the fire safety guidance in AD B as critical to improving building fire safety with amended versions published during 2019 and the latest edition in November 2020. Specific fire safety considerations given or implicit in AD B on balconies, spandrels and laminated glass are discussed in the relevant sections of this report. Responding to the recommendations from Dame Judith Hackitt, in December 2018 MHCLG released a call for evidence for a technical review of AD B and an analysis of that call was published in September 2019. A key part of this consultation process sought views to help set the agenda, terms of reference, and programme for the technical review of which this project forms part of outcome.

Part A: Balconies

A/B-5. Background

This section examines balconies (and by extension, terraces) as specific features of buildings, it summarises the different ways in which the terminology is utilised in building regulations, as well as historically. From the review, it is clear that the term ‘balcony’ can represent multiple features of a building with a single common characteristic, which is to provide a link between the interior and the exterior at elevation. In England, balconies form part of the building and therefore are required to fulfil Building Regulations in all regulated areas (e.g. energy management, mechanical behaviour, safety of use, etc.) and hence, their design and construction are heavily influenced by the current Building Regulations.

The Building Regulations and the statutory guidance in AD B do not explicitly assign specific fire safety features to balconies or a specific role within the fire safety strategy. However, there is an implicit expectation that balconies will fulfil, in terms of external fire spread, the same performance requirements as from any other component of the building envelope, i.e. B4: external fire spread. Nevertheless, because of its function of being a link between the interior and the exterior, a balcony will be required to be designed in a manner that does not challenge the functional requirements given by B2: internal fire spread - linings and B3: internal fire spread - structure. Finally, balconies can be a means of egress and access to occupants and the fire and rescue services, therefore, in those cases, they may have a significant effect on the functional requirements given by B1: means of warning and escape and B5: access and facilities for the fire and rescue services.

A particular aspect of balconies is that they can be used to reduce or control the potential for external fire spread. The literature provides some evidence of this possibility, nevertheless, this unique feature of balconies requires much more detailed exploration.

A/B-6. Historical purposes and evolution

The origin of the word balcony dates back to early 17th century and comes from the Italian word *balcone* (Balconette, 2020). However, balconies - like architecture and construction - are not as 'young' as the origin of their name. The construction of the first balconies, although hard to trace, is dated at least 3000 years ago, in ancient Greece. Architectural design using large heavy stone-made buildings required an outlet to assist with air circulation and enhancing natural light by providing large openings to the outside. Thus, the use of balconies was more functional, following the needs of the Mediterranean climate.

Aside from their functional purpose in design, balconies had other purposes in ancient times. In Persia and Egypt (Origoni and Origoni, 2020), the balcony, located in the centre of the façade, had a special purpose in ceremonies, as well as a hierarchical one: it made the presence of someone prevail over the populace. Later, in ancient Rome, balconies were used as open-air platforms for emperors to address large gatherings and be seen by the public. This function is typically served by podiums in moderns times rather than balconies.

The function of balconies seems to have changed over the centuries and it was suggested by Eugene Emmanuel Viollet-le-Duc (Viollet-le-Duc, 1854) that the modern-day balcony design derives from the medieval hourd – an anti-siege device that could be mounted onto a castle wall; see Figure A/B-1.

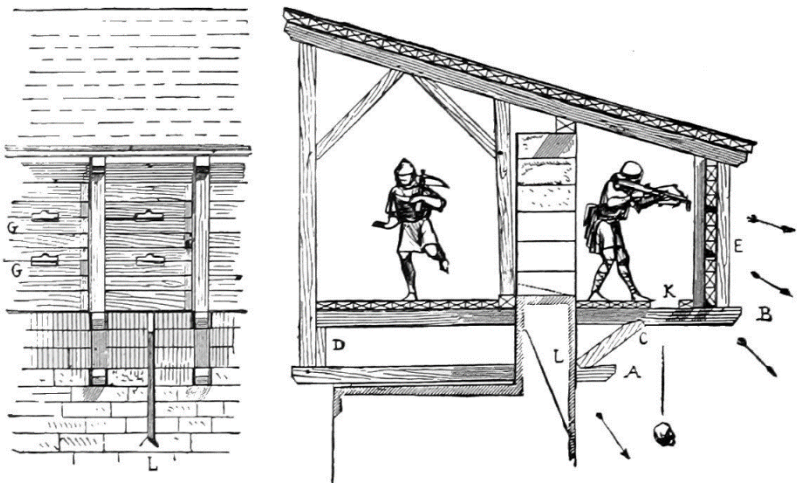

Figure A/B-1 Medieval hourd, as extracted from (Viollet-le-Duc, 1854)

Over time, balconies, rather than being only functional, have also evolved into decorative features. Early examples point towards the 15th and 16th centuries – during the Renaissance period – when balconies were 'status symbols' whose main purpose was aesthetic, rather than functional (Origoni and Origoni, 2020).

The aesthetic purpose of balconies was enhanced over the following centuries, when the Juliet (or Juliette) balconies became popular in architectural design, especially around the 18th and 19th centuries. A typical modern Juliet balcony is shown in Figure A/B-2. Although these initially served a practical purpose, similar to that of the Ancient Greek designs, they

soon became a fashion-driven choice that were added to homes to make them appear more *grandiose*. In the UK, they have been produced since the Georgian period (1714-1837) giving residential buildings a highly prestigious appearance. Their use increased in the early 19th century with the growing use of cast iron railings.

It is important to note that modern so called 'Juliet balconies', or Juliet guardings, normally have no associated external floor, and their functional use is of guarding and preventing a possible fall as shown in Figure A/B-2.

Figure A/B-2 Typical modern Juliet balcony

The increased urbanisation during the 20th century highlighted a need for developing high-density cities to accommodate population growth (Kotulla et al., 2019). In the context of modern urban and building design, studies have highlighted that balconies are one of the most desired architectural and design features as a private outdoor space (Kotulla et al., 2019; Omrani et al., 2017; Ribeiro et al., 2020). It is acknowledged (Kim, 2020) that a balcony incorporates a remarkable potential, especially as it:

- Allows life on the outside of the building,
- Brings natural light into the apartments or other internal spaces, where designed to do so, although stacked or recessed balconies may have an opposite effect and reduce sun exposure,
- Produces shadows on itself,
- Serves to reduce the action of rain and wind, and
- Enlarges the living space and range of activities possible in a dwelling without a garden or lawn.

As an example, The London Plan (Greater London Authority, 2021) advocates that new build private dwellings should have access to some private external space such as a balcony, stating:

> "*All dwellings should have level access to one or more of the following forms of private outside spaces: a garden, terrace, roof garden, courtyard garden or balcony*".

Private balconies need to be differentiated from balconies used by the residents to access their apartments, also known as 'external deck' or 'common balconies'. Their existence is ancient, and they were used significantly in the Middle Ages. Modern deck access

balconies appeared in the early 1930s, influenced by the Bauhaus architectural school that used them when designing "*the city of tomorrow*" in Dessau, Germany, shown in Figure A/B-3. The architects, including Swiss architect Meyer, realised these balconies were economically efficient and had an important social aspect. These buildings are still in use.

Figure A/B-3 Apartments since modified with balcony access originally designed by Bauhaus architectural school (Bauhaus Dessau Fondation, n.d.)

The use of deck access balconies in the UK became popular during the post-war reconstruction, partly due to their economic benefits. They also offer advantages over corridor planned apartments from a dual aspect with daylight and ventilation benefits. However, the interest for this type of access quickly decreased due to obvious thermal issues and as they were also subject to anti-social behaviour (Housing Learning & Improvement Network, 2014). In recent years, they have gained in popularity again, such as in sheltered housing, as they create a space where people can socialise.

Finally, it is important to recognise that balconies may not always be located on the external walls of a building and may be in internal atria, for example. This is a common approach used by architects implemented mainly in hotels, student accommodation, office spaces, etc. However, the scope of this research is to look at the impact of these elements on external fire spread and therefore internal balconies are not explicitly considered.

It is important to conclude that regardless of the type or the background, balconies and/or terraces perform a social role, allowing people to access an outside space in which they can undertake various activities, congregate in social groups, connect with other people and 'look' to the outside world. This is acknowledged in the newly released British Standard BS 8579:2020 dedicated to balconies, which notes:

> *"Balconies, terraces and access decks should be designed to provide amenity for the building users and should be sized appropriately for the intended use. Balconies form a significant feature on the facade of many buildings, very often forming part of the character of the building*."

A/B-7. Modern balcony: Definition, types and role

A/B-7.1 Definitions

The balcony design depends on the parameters set, such as their role, the type of fixing, the boundary system, the position between the balcony and the rest of the structural frame, the structural load bearing capacity, etc.

To fully understand what a balcony is and what its purposes are in modern architecture and construction, it must be first defined. According to the Oxford English Dictionary, a balcony is:

> *"a platform that is built on the upstairs outside wall of a building, with a wall or rail around it. You can get out onto a balcony from an upstairs room."* (Oxford Dictionary, 2020).

This definition must be refined for the purpose of this research project, especially to clarify a question often raised in the modern construction industry: what are the differences between a balcony, terrace, and an accessible rooftop as different design objectives apply for fire safety and other reasons?

A new British Standard focusing on balconies was released in 2020, BS 8579:2020. Much effort was put into releasing this new standard in order to set specifications and details regarding balconies and terraces by bringing together opinions and requirements of many stakeholders. The standard deals with types of balconies and terraces giving information regarding those, as well as definitions. These are summarised in Figure A/B-4 and the definition of balcony given below:

> *"3.2 Balcony: Accessible external amenity platform above ground level exterior to and with direct access from a building*
>
> *NOTE 1 A balcony is formed above an external space that is not a habitable room. See 3.9 for the definition of terrace.*
>
> *NOTE 2 A balcony is not regarded or designed as storage space.*
>
> *NOTE 3 For the purposes of fire, a balcony is not a roof."*

This must therefore be read jointly with the definition of terraces:

> *"3.9 terrace: external accessible surface above an internal space above ground level exterior to and with direct access from a building to occupants for purposes other than exclusively maintenance*
>
> *NOTE 1 A terrace is a roof for the purposes of fire and waterproofing. Additionally, for fire purposes, a terrace can also perform the function of a floor.*
>
> *NOTE 2 Certain spaces might incorporate features of both a balcony and terrace."*

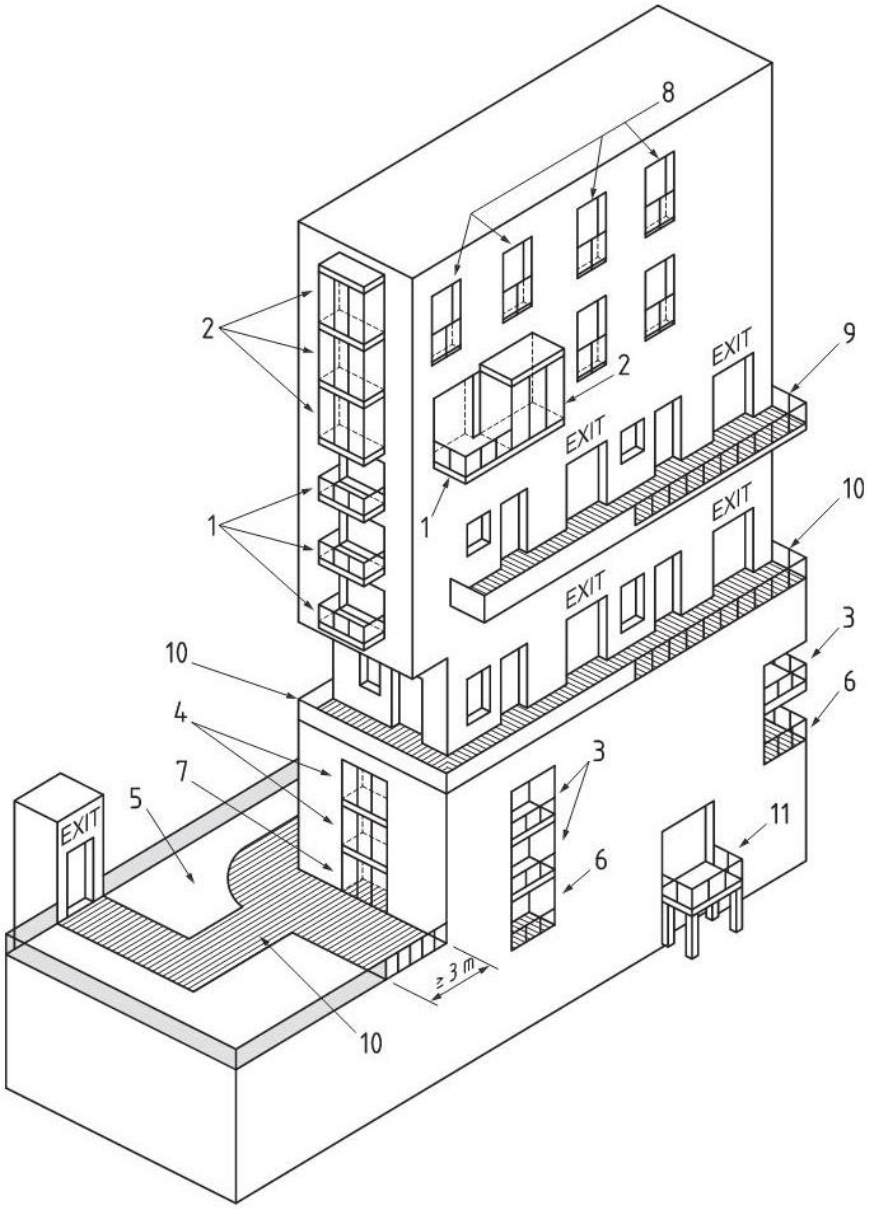

Key

1	Projecting open balcony	9	Access balcony [can be referred to as "access deck" (see **3.1**) or "walkway"]
2	Projecting enclosed balcony	10	Access terrace [can be referred to as "access deck" (see **3.1**) or "walkway"]
3	Recessed open balcony	11	Free-standing balcony
4	Recessed enclosed balcony		Terrace, access terrace and access balcony surfaces with fire performance B_{ROOF} (t4) or better (see Clause **12**).
5	Terrace		Imperforate (as BS 9991) guarding materials reaction to fire class as in Clause **12**
6	Recessed open terrace		Other guarding materials reaction to fire class as in Clause **12**
7	Recessed enclosed terrace		Other guarding
8	Juliet guarding		

NOTE National regulations might cover roof performance in relation to relevant boundaries.

Figure A/B-4 Balcony definition, reproduced from BS 8579:2020

These two definitions, in conjunction with Figure A/B-4, provide the required clarity. The difference between a terrace and a balcony is that an internal space is provided underneath a terrace; therefore, the terrace also acts as a roof. This is significant as the temperatures reached during a fire developing within an enclosed space tend to be greater than temperatures in spaces with large permanent openings to outside, as heat will spill to outside in the latter case (refer to Section A/B-7.4 for considerations regarding enclosed balconies). Another point must be highlighted in this definition: balconies can be used as an extension of a terrace and therefore both elements can be linked.

The definition of balcony in the International Property Measurement Standards (IPMS) (RICS, 2018): Residential Buildings, should also be mentioned:

> *"An external platform at an upper floor level with a balustrade to the open sides projecting from or recessed from an external wall and including in this definition generally accessible rooftop terraces and galleries and loggia."*

The main difference with the definition in BS 8579 is therefore the inclusion of terraces, galleries and loggias. However, the purpose of this definition (i.e. ensuring that properties are measured in a consistent way) is different from the one given in BS 8579 (i.e. providing guidance to balcony designers). From a fire safety perspective, as explained later in this report, it is important to distinguish these elements as the associated impacts of a fire on these can differ significantly. It is therefore proposed to use the definitions provided in BS 8579 as the basis of this report. Following the adoption of this definition, the next sections examine the different types and roles of balconies and terraces in further detail.

A/B-7.2 Private vs. shared balconies

A/B-7.2.1 Private balconies

The first role that comes to mind when talking about balconies is one of private space used by the residents of the apartment it is linked to. A global trend currently sees the number of people living in cities increasing, including the UK (Quinio and Neuhuber, 2020). As cities become larger and larger, land availability is getting scarcer. As a result, cities tend to grow upwards to maximise space (and profit) by adding taller and taller buildings. Therefore, the number of people living in apartments continues to rise. Data from 2018 (Eurostat, 2020) show that almost half of the European Union population (46%) live in apartments. In a recent study of fires in dwellings (Spearpoint and Hopkin, 2020), it was noted that around 20% of dwellings in England are apartments (flats).

In addition to that, while owning a house remains popular, there is an increasing number of people wanting to (or being obliged to) live in apartments, not only in the younger but also older generations. The main benefits, other than cost, being:

- Practicality in terms of location as they allow people to live in city centres close to main attractions,
- Practicality in terms of services available in modern apartment buildings (24/7 concierge, gym, private cinemas, etc.) which can be a 'city within the city',
- The low maintenance required when compared to houses, and

- The social aspect, especially for people moving into sheltered housing that now includes all the facilities and the community feel that can be found in villages, as well as the essential healthcare system.

A challenge with the attraction of this way of living is in providing quality living in a relatively small space without direct access to an external area, such as a garden. An efficient and cost-effective way to improve these apartments has been the provision of balconies.

The current COVID-19 crisis reinforces the need for external spaces, especially when people are in a situation of lockdown and as a result not allowed to go outside and socialise. Balconies can be the only way to directly communicate with the neighbourhood and go outside where travel restrictions do not allow people to do so.

The use of balconies by residents can vary significantly from one apartment to another and will be influenced by factors such as:

- Their size,
- Their facing orientation (north, south, east or west),
- Their exposure to external elements,
- The local climate, and
- The time of the year.

Balcony use is varied, they can be used as a small dining spaces with a table and few chairs, or even an extension of a living room with large furniture items such as sofas and potentially heating equipment. They can also be used as a storage space containing significant amounts of combustible materials and maybe fully open (aside from the balustrade) or partially or fully enclosed.

Of course, restrictions in terms of use and furnishings apply on these spaces for various reasons, such as aesthetic, falls, gravity load and, of course, fire. However, enforcing these restrictions is always a challenge. This was highlighted recently with the battle between Amazon and London Fire Brigade (LFB) who successfully stopped the retail giant from selling barbecues especially designed for balconies (London Fire Brigade, 2020a).

A/B-7.2.2 Shared balcony

A similar type of balcony to the private balcony is one used as a shared amenity space for residents. They can be found more often in the form of a terrace but do also exist as balconies. They create space where people can meet and socialise.

The challenges with this type of space are similar to those of private balconies. However, their use and content can be more easily managed as they can be accessed and verified by the building management, while it is much more complicated to access privately owned balconies. As such, the management of these spaces is regulated by the Regulatory Reform (Fire Safety) Order 2005 (RRO). Obviously, a lack of management can be detrimental to these spaces as they can be large and can, therefore, contain a significant amount of combustible materials, if not controlled.

A/B-7.3 Balconies as means of access/egress

A completely different type of balcony is that classed as ‘deck access’ also sometimes called a ‘common balcony’. These balconies are used as means of access / egress by the residents and, most of the time, means of access for the fire and rescue services. They offer a level of protection to ensure that residents and the fire and rescue services can use them in the event of a fire. Based on that, they should be designed so that:

- They are unlikely to collapse when exposed to a fire during the evacuation of residents and intervention of the fire and rescue services;
- A fire starting in an apartment opening onto it does not unduly compromise them (i.e. requiring protection against thermal radiation and smoke);
- They do not significantly contribute to external fire spread; and
- They remain free of combustible materials at all times so that a fire cannot develop in this space.

The last point is a challenge in modern architecture as, as previously discussed, balconies are coming back into trend to create a community feel, especially in sheltered housing and, therefore, there is an increasing wish to provide furniture, plants, etc. to reinforce this feeling.

A/B-7.4 Boundary system – open vs. enclosed balconies

BS 8579:2020 distinguishes open and enclosed balconies (Figure A/B-5) as follows:

- ***Open balcony:*** is an open system to the outside without offering protection against weather conditions; and
- ***Enclosed balcony:*** is a system offering protection against environmental conditions. This can include a roof or another balcony above or/and any kind of protection boundaries on the side edges. They can also be named a *‘winter garden’*. From a design point of view, they are not considered as an ‘internal room’ as they are outside of the thermal envelope of the building.

The type (glass, timber, louvres, etc.) and extent (fully open, partially open) of the enclosure of the balcony will likely have a direct impact on the way fire could develop and, as such, on the measures required to ensure the adequate safety of buildings. It is therefore key to define the boundary between these two balcony types; i.e. the percentage of permanent openings. Section 7.3 of the BS 9991:2015 code of practice suggests that a balcony is considered as open where:

> *“At least 50% of the vertical section should be open and the area of opening should be uniformly spread around the surface.”*

This area can vary significantly from a recessed balcony (open on one side only) or a projecting balcony (usually open on three sides). Further research will need to examine the origin of this value of 50% and whether this percentage is appropriate from a fire safety perspective.

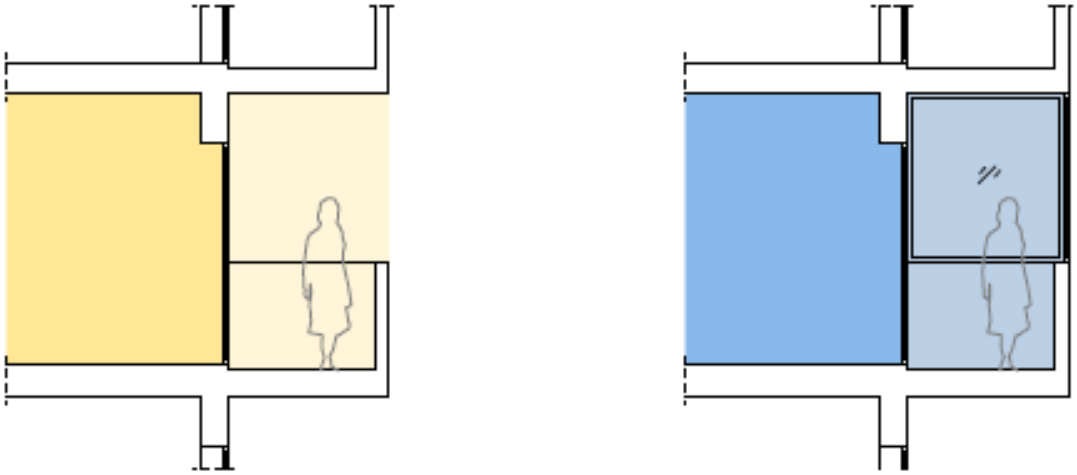

Figure A/B-5 Open (left) and enclosed (right) types of balconies, as extracted from (Ribeiro et al., 2020)

The increasing use of marginal urban land adjacent to busy roads and rail infrastructure for the development of high-density residential buildings is engendering the use of enclosed balconies for acoustic wellbeing of the occupants. The enclosing of balconies may involve the installation of laminated glass. Therefore, clearly identifying the fire safety measures associated with such spaces is key.

It should also be noted that the enclosure of the balcony may evolve throughout the life of the building. This may be because the initial design of the balcony was not adequate, for example, the absence of consideration of wind as reported by a balcony designer interviewed as part of this project. As observed by some authors of this report, during fire risk assessments it was found that enclosing balconies can result in adding a room to an apartment or to improve the thermal performance of the building, especially in the buildings built after the Second World War, where balconies used as means of escape were common.

A/B-8. Balcony construction methods

A/B-8.1 Introduction

A balcony is an integral part of a building's façade, so its design is crucial to the property's architecture. Over the years, balcony styles have evolved (and will keep evolving) to reflect changes in structural design, construction and building materials but also cultural changes, climate changes, etc. Choosing a method of implementing a balcony design to a new and/or existing building is of high importance considering the structural, environmental and cost factors which could impact on a short- and long-term bases.

A/B-8.2 Projecting balcony

A projecting balcony cantilevers from the building with no visible means of support, apart from the fixing to the façade (Figure A/B-6). This type of balcony is one of the most common types used in current construction, providing a popular aesthetic. However, because the weight and imposed loads are supported by cantilevering the structure off the wall, the structural design generally needs to be completed in advance and these balconies usually cannot be retrofitted at a later stage.

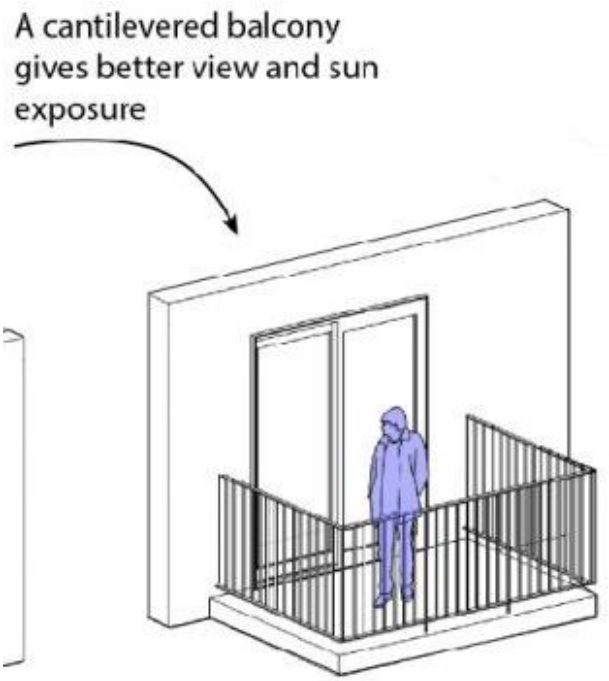

Figure A/B-6 Projecting balcony

As detailed later in the report (Section A/B-9.1.6), consideration should be given to thermal breaks at balcony connections (see Figure A/B-7) when designing and installing balconies. Indeed, while these elements are intended to address requirements of heat transfer (L1A), it is essential that the solution to the thermal bridge is also compatible with the functional requirements of B4.

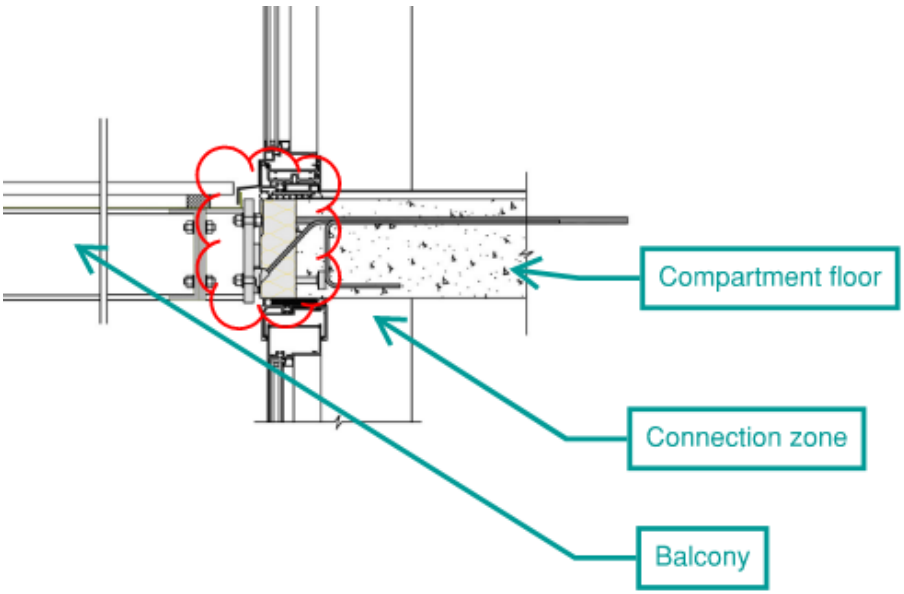

Figure A/B-7 Steel cantilever balcony design (www.schoeck.com/en-us/balcony)

Traditional cantilever balconies are usually made of concrete or both steel and concrete. Timber joists are also used in some countries (US, Canada, Nordic countries, etc.) and offer another solution (Figure A/B-8), as their thermal conductivity is low.

Cantilevered balconies are usually made to a maximum of 1500-1800 mm depth (measured from the connection the end of the balcony). Beyond these depths the forces grow and require much more complex technical solutions. The smaller the depth, the less movement that is expected.

Figure A/B-8 Wood joists for cantilevering a balcony, as extracted from (Havel, 2009)

A/B-8.3 Hung balcony

Another form of support for balcony structures is to use stainless steel cables or rods that are fixed to the walls and ‘hang’ the balcony or balconies (Figure A/B-9). The method works

by using the bolt strength at the wall 50% shear and 50% pull out forces. The design is not commonly used mainly for safety reasons as the rods/cables require regular inspection and maintenance.

Figure A/B-9 A hung balcony using a stainless rod

A/B-8.4 Self-supporting balcony

A self-supporting or ‘independent’ balcony has structural support independent of the adjacent building structure. Normally such balconies accommodate a separate structure to the building and often are not connected structurally. The balcony structure is supported using vertical pillars and the weight of the balcony or balconies (if stacked on top of each other) is supported by these pillars and transferred to the ground where concrete pads are usually cast. Some balconies on pillars or stacked balconies are made of either steel or aluminium materials that give a smooth appearance to the building. This balcony scheme is the most appropriate for retrofitting projects where the additional loads cannot be supported by the existing building. Ease of implementation is a key factor for choosing self-supporting balconies.

A/B-8.5 Recessed balconies

Recessed balconies are also used in the UK, mainly in mid-rise buildings. They present several benefits such a privacy and wind protection, being enclosed on three sides. However, they will affect daylight exposure and may end up enclosed as this could add value to the apartment by being considered as an internal space.

Type				System	Picture	Advantage	Disadvantage
projecting	tie back	hung		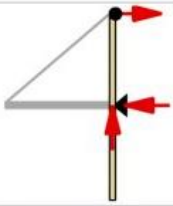		Low deformation (no moment at the connection) No load concentration	Additional interface detail to wall Prone to vibration
		ladder		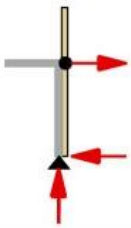		Fast installation of balcony elements Independent structure	Complicated connections High steel quantity for balcony structure
		frame		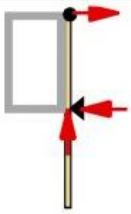		Flexibility because of separation Possibility of good protection	Columns obstruct a clear view High steel quantity for balcony structure
	cantilever	separated	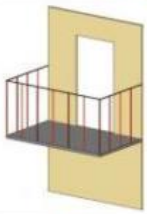	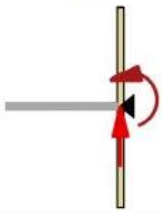		High degree of pre-fabrication Separation of building structure	Moment result high load High thermal bridge (without thermal packer)
		continuous		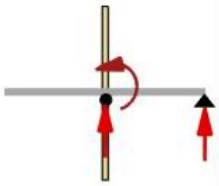		No specific connection to building structure Distributed load to internal area	Danger of thermal bridging + moisture Low flexibility
independent				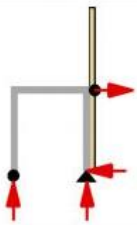		Less loading to the building structure Fast erecting process	Columns extend to ground level Additional foundation required

Figure A/B-10 Different types of balconies used in the UK (EURBAN, 2020)

A/B-8.6 Juliet balcony / guarding

A ‘Juliet balcony’ is defined as a shallow balcony, acting as a balustrade, protecting from a fall, e.g. outside French doors. In such balconies, rails are normally fixed to the external façade of a building. Due to the absence of projection, their impact on external fire spread will be different from the types of balconies studied in this report. It is therefore not proposed to study these extensively as part of this research other than in the context of laminated glass (see Section A/B-26.5).

It should also be noted that BS 8579:2020 refers to this type of construction as ‘Juliet guarding’ and defines it as follows:

> *“external guarding to openable doors without an associated external floor”*

BS 8579 gives the specification related to guarding from a design perspective (Section 1. Scope). This denomination is used hereafter in this report to clearly differentiate it from a balcony.

A/B-8.7 Conclusion

Choosing the appropriate type of balcony is a process of identifying the construction mode which enables the designer to overcome as many challenges as possible and satisfy as many requirements set by the construction and regulatory environment in each case/country. Some of the advantages and disadvantages of different balcony types are illustrated in Figure A/B-10.

A/B-9. Challenges in designing and building balconies

Not only in UK, but worldwide, there are notable considerations regarding the design and incorporation of balconies and terraces in new or existing buildings. BS 8579:2020 introduces the following:

- Effects of wind and precipitation, including snow,
- Water drainage,
- Acoustic performance,
- Safety of persons using the balconies, guarding, etc.,
- Thermal bridging,
- Fire safety,
- Shading, and
- Interfaces and responsibilities.

The considerations having the most significant impact on fire safety are detailed in the following sections. However, balconies by their very nature have characteristics that can affect fire safety in that:

- Balconies are projections that follow openings and, because of their characteristics, could promote the ingress of balcony fire through the openings into the building and contribute to fire spread from one level to another,
- Balconies can accumulate combustible materials and can host ignition sources,
- Construction materials can promote external flame spread if combustible components are present,
- Projected balconies above windows can deflect the flame from an internal fire outdoor and away from the external wall and potential openings, hence reducing the potential for fire spread from one level to another,
- Detailing of the balcony can result in pathways for fire spread, especially in the zone between the balcony itself and the building compartment floor where fire stopping and cavity barriers need to be provided to limit fire spread. Due to the presence of cladding and balcony support passing through this space, it can be challenging to install these fire resisting elements, and
- When designed as a means of escape and/or a fire-fighting access route, balconies present the advantage of limiting the risk of becoming compromised by smoke if designed adequately compared to an internal corridor due to:
    - The permanent openings to outside, and
    - The absence of reliance on active fire safety systems such as mechanical smoke extraction.

A/B-9.1 Materials and components of balconies

A/B-9.1.1 Structure

A typical structure of a balcony could comprise of different materials, the most popular being currently:

- Aluminium and steel,
- Concrete, and
- Timber.

The choice of materials mainly depends on the design needs and fixing points.

At the start of the 20th century up to the 1970s, concrete deck balconies were extensively used. The advantage of a concrete deck is that it could last hundreds of years without any onerous maintenance, but the disadvantages are that they are heavy, expensive and complicated to insulate to prevent thermal bridges – refer to Section A/B-9.1.6.

Wood can also be used. It presents several advantages: it is lightweight, attractive, environmentally friendly and easy to cut and install. It has also a better thermal inertia than concrete, steel or aluminium and therefore can limit the thermal bridge phenomenon (refer to Section A/B-9.1.6). However, its maintenance over time can be expensive and rotting is a concern. Also, in England, it has been recently banned in external walls (and attachments) to residential blocks of flats and other relevant buildings over 18 m in height due to its potential contribution to external fire spread, refer to Section A/B-12.1.

Currently, aluminium balconies are the most popular, especially because of their lightweight, non-combustible nature and their longevity as they will not rot or rust (but may discolour) resulting in a low maintenance cost. Stainless steel balconies are also used as they are also non-combustible and durable. However, they come at a higher price and are heavier and therefore more difficult to design and install.

A/B-9.1.2 Balustrades and separation screens

Balcony balustrades are very important for guarding and preventing falls. Traditionally, materials used for such components are wood and steel; however, aluminium is now commonly used also used as well as stainless steel. Different materials can be used as infill in balustrades, such as aluminium rails, glass panes (Figure A/B-11), wooden rails etc. Sometimes, coating is also applied on the materials for maintenance-free finish and aesthetic reasons. Relevant guidance regarding balustrades can be found in BS 6180:2011. One of the most popular balustrade infills up to the amendment of Part B of the Building Regulations was laminated glass – this is detailed in Part C of this report.

Architects and balcony designers interviewed during this phase highlighted that designing balustrades correctly is key. If parameters such as weather protection (wind, etc.) are not taken into account correctly during the design phase, residents may add their own protection. The materials used by residents are combustible. Balustrades can also affect daylight in the building if they are opaque.

Figure A/B-11 Balcony with glass panes supported on metal posts

Physical barriers can be provided to separate continuous private balconies shared between apartments. Their fire performance in terms of reaction-to-fire and fire resistance can also impact the way the fire could spread laterally. As they form part of the balcony build up, these elements must now achieve Euroclass A2-s1, d0 under the amended Building Regulations (refer to Section A/B-12). However, they do not need to achieve a minimum level of fire resistance (in terms of integrity or insulation).

A/B-9.1.3 Decking

Nowadays, balconies are sometimes covered with tiles, vinyl or composite materials (e.g. wood-fibres with polyethylene), as they do not rot like timber and can be lighter. Pavement slabs can also be provided, especially on the tops of terraces; their use in cantilever balconies is usually avoided due to their self-weight.

A/B-9.1.4 Fixings

Sealants can be used instead of mechanical fixings for providing decorative panels around balconies as highlighted by one balcony designer interviewed as part of this project. In addition to being combustible and therefore potentially contributing to fire spread, these sealants may fail at relatively low temperatures when exposed to a fire which could result in the panels becoming dislodged and falling.

A/B-9.1.5 Insulation

Where terraces are being provided above habitable rooms, insulation is required between these two spaces. The use of non-combustible insulation (e.g. mineral wool) is difficult as it is a relatively soft material. The majority of products suitable for this application in terms of water resistance, compressive strength and thermal resistance are currently combustible. However, there are silica-based products and ‘foam glass’ non-combustible products, although foam glass deteriorates when subjected to frost.

A/B-9.1.6 Thermal bridging

One of the main considerations in the current design of building external envelopes is thermal insulation and limiting heat losses. This is highlighted in Approved Document L1A (ADL1A) (HM Government, 2016) which mentions:

"…reasonable provision shall be made for the conservation of fuel and power in buildings, by limiting heat gains and losses through thermal elements and other parts of the building fabric."

Breaches through the building thermal envelope can lead to heat transfer from the outer to the inner environment therefore resulting in heat losses. This area of weakness is called a 'thermal bridge'. As such, cantilever balconies, by breaching through the building façade, can create a thermal breach if not designed properly (Morrison Hershfield Limited, 2020; Morrison Hershfield Limited., 2013). The interaction between the warm inside and the cold-outside environment could lead to a large amount of heat losses (Ge et al., 2013; Goulouti et al., 2014) via the connections between the floor or building frame located in a warm environment and the balcony deck. In addition to heat losses, this may result in condensation within the building. Indeed, the floor slab will be cooled down as a result of thermal bridging and condensation may appear where the warm air within the building hits the floor.

A common solution in such cases is introducing a thermal break, which is an element of low thermal conductivity material placed in the connection (embedded in the construction) to prevent the conduction of thermal energy to the adjacent members (Lstiburek, 2012; Morrison Hershfield Limited., 2013) as represented in Figure A/B-12. The insulation materials typically include extruded polystyrene, expanded polystyrene, or mineral wool, all of which have a low level of thermal conductivity (i.e., 0.025 to 0.040 W/m.K) (Goulouti et al., 2014; Susorova et al., 2019). However, such insulation materials may have an impact on fire spread if combustible, or on the structural behaviour. Stainless steel is currently one of the most common materials used to support balconies due to its low thermal conductivity (15 to 17 W/m.K) when compared to carbon steel (~45 to 50 W/m.K) for instance.

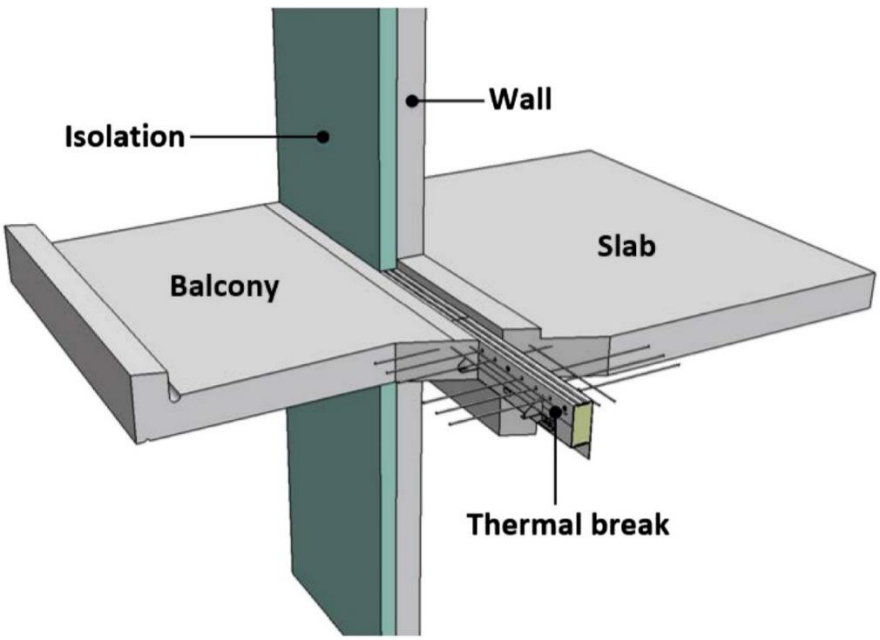

Figure A/B-12 Thermal break shown on the connection of a balcony

Another solution consists of encapsulating the connections (rods) between the balcony and the slab with insulation having good thermal performance, but which is combustible. EPS, XPS and MW can be used to wrap around brackets and rods in point-supports such as on metal balcony frames, but do not act as a thermal break unless used in linear supports

such as on a concrete balcony. Where the stresses pass through a point support a thermal break can be formed using a material of high compressive strength sandwiched between two connecting end plates. These materials usually have poor thermal resistivity, but some have a degree of non-combustibility.

Thermal bridging in concrete balconies is usually addressed by incorporating a thermal break within the in-situ cast concrete slab build-up to form a balcony floor.

Thermal bridging in building envelopes is a major concern in terms of overall thermal performance of a building. Regulators in many countries aim to limit heat losses from a building, by bringing forward strict regulations regarding energy efficiency standards. Regarding thermal bridges, ADL1A states that the building fabric should be constructed so that:

> *Section 3.2: the insulation is reasonably continuous over the whole building envelope…*
>
> *Section 3.9: there are no reasonably avoidable thermal bridges...*

It is therefore required for designers to consider, amongst other things, thermal bridging, as to minimise such effects and comply with Building Regulations. Two aspects of the thermal bridges can have an impact on the functional requirements related to fire safety:

- Their combustibility: these elements are currently excluded from the ban of combustible materials in external walls of the amended Building Regulations (refer to Section A/B-12.1). Therefore, they can be made of materials achieving various fire performances in that regards. While certain methods for limiting thermal bridging rely on thermal breaks limited in size, some others rely on larger elements for instance with the encapsulation of the balcony supports and therefore could have a more significant contribution to external fire spread.
- The fact that they can breach the continuity of cavity barriers / fire stopping provided at slab level – refer to Section A/B-9.1.8.

A/B-9.1.7 Waterproofing

External envelope waterproofing should be designed to prevent water ingress within the building. However, cantilever balcony supports will breach this protection as shown in Figure A/B-13 and therefore create a route for water ingress within the building. To prevent that, sealants can be used, these are often combustible and can therefore contribute to external fire spread.

Waterproofing of the balcony itself can also be required for various reasons such as to protect the structural zone (between the balcony deck and the soffit underneath), to protect the balcony underneath or to protect concrete deck balcony. This was traditionally achieved by using combustible membranes that could also contribute to external fire spread.

Surface water is collected and directed towards vertical water drainage pipes running through the external envelope or within the building as shown in Figure A/B-13. In addition, the drainage system can create a direct path for fire spread between floors if not designed properly as it passes through the horizontal fire rated separation provided at floor level (e.g. PVC pipe not provided with adequate fire stopping).

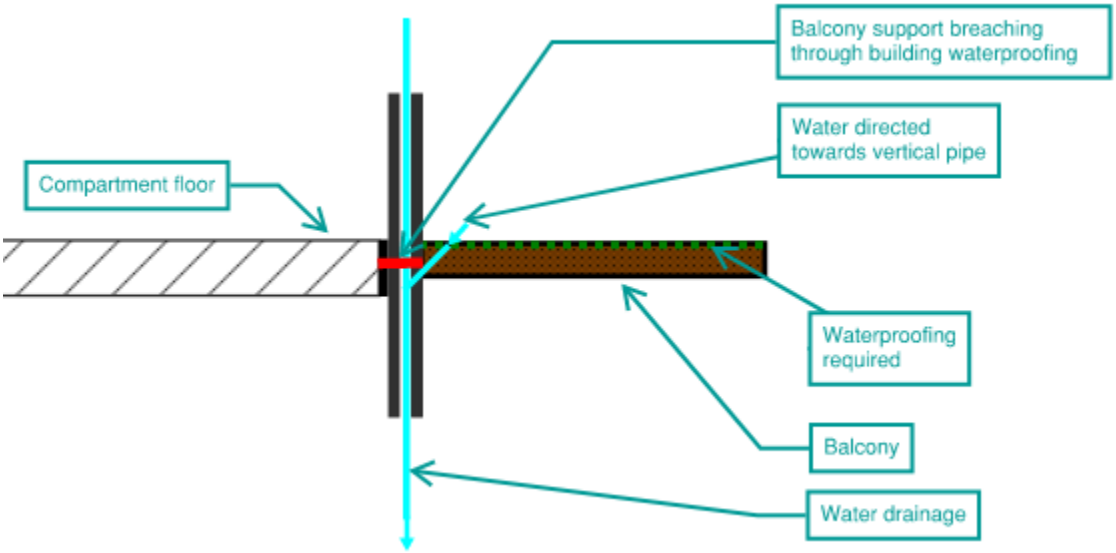

Figure A/B-13 Balcony waterproofing – section view

Passive drainage (e.g. via perforated floor) can also be used, but should be limited to balconies less than 6 m^2 as suggested to NHBC. This can have a direct impact on fire spread as a solid soffit would tend to deflect the flame outwards while with a perforated ceiling and deck, a fire could quickly spread from one level to another without any physical horizontal barrier to stop it.

A/B-9.1.8 Fire stopping and cavity barriers

Fire stopping and cavity barriers should be implemented in such a manner than the external wall and balcony build-up meet the requirements of B3 and B4. Figure A/B-14 shows an example of a configuration where fire stopping and cavity barriers should be provided:

- Between the slab edge and the external wall at compartment floor level to ensure continuity of the compartment floor, and
- Within external cavity wall at compartment floor level.

The zone where these elements should be installed is usually congested due to the presence of various components such as cladding supports and therefore ensuring that they are correctly installed is often challenging. The addition of balcony supports that run through this zone makes their installation even more difficult.

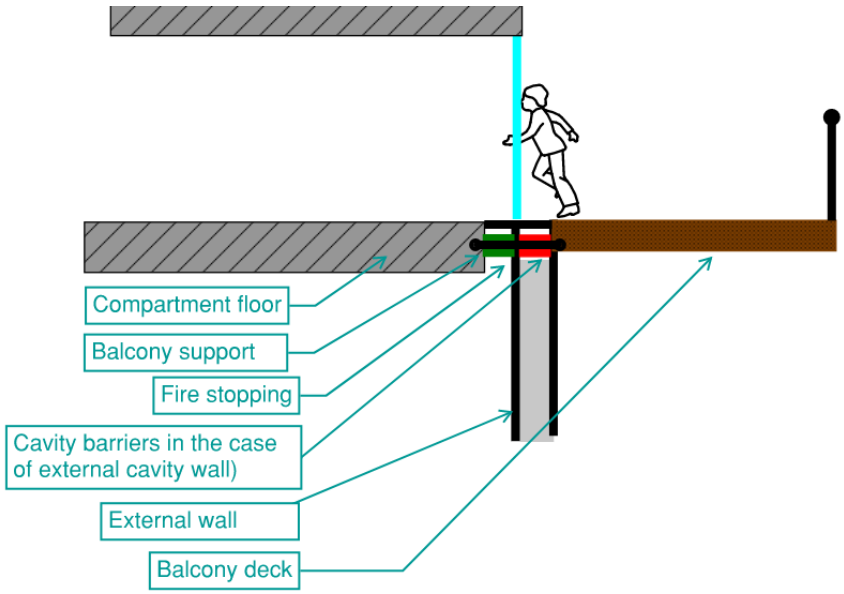

Figure A/B-14 Cavity barrier and fire stopping

A/B-9.1.9 Conclusion

Materials used in the construction of balconies have the potential to affect external fire spread in a number of ways depending on their properties, amount and location (exposed vs not exposed, etc.). They can contribute to the development of the fire if combustible, lead to downward, upward or lateral fire spread but also delay fire spread if not combustible.

A/B-9.2 Interfaces and responsibilities

Designing and building a balcony relies on numerous trades meaning that coordination between the different parties is key. However, how to determine who is responsible for what can be difficult to assign. For instance, the structural engineer designing the building may be different from the one designing the balcony. There could also be challenges in terms of fire stopping which will require coordination between the architect, the structural engineer (due to elements that may breach it), the façade engineer, the balcony designer, the plumbing engineer (if water drainage is provided) and of course the fire stopping manufacturer that will need to ensure that their product is suitable.

A/B-9.3 Distribution

The number and distribution of balconies on a building elevation can vary significantly from one building to another and even from one elevation to another. This could have an impact on fire spread; balconies stacked on top of each other may not have the same impact on external fire spread compared to situations where they are not. This aspect of the design could be beneficial in terms of restricting external fire spread where they are designed to do so (e.g. by incorporating balconies providing a certain level of fire resistance) or detrimental (e.g. where incorporating combustible elements and/or open floors). Continuous balconies shared between apartments and separated by non-fire rated partition (refer to Section A/B-

9.1.2) could also contribute to lateral fire spread as the fire could spread from one balcony to another.

The issue of balcony distribution in relation to external fire spread has been observed several times, for instance in the Mermoz Tower fire in 2012 (Section A/B-11) or in West Hampstead (Section A/B-11.1) in 2018 where the fire spread progressively from balcony to balcony vertically.

A/B-9.4 Green balconies

As previously seen, two types of combustible materials need to be considered when assessing the fire performance of balconies: those introduced by the balcony user, which can be difficult to manage, and those used in the balcony construction.

A third type of combustible should be distinguished: green balconies (Figure A/B-15). Balconies users can add greenery to their space, but they are also introduced on a growing number of projects during the design phase by architects and developers. The Department for Communities and Local Government, now MHCLG, published a document titled Fire Performance of Green Roofs and Walls (Department for Communities and Local Government, 2013). This document aimed at reviewing the fire safety guidance documents available on green roofs and walls as well as fire tests carried out. It concluded that green walls can currently be used if no restrictions apply regarding the external surfaces in Approved Document B (refer to Section A/B-12.2). For other situations, it should not be used unless test evidence can be produced demonstrating compliance with Approved Document B. It also highlights that the moisture content of the plants has an impact on flame spread and therefore correct irrigation is key. Some research has been done on fire safety issues associated with the use of green roofs and walls (Chow et al., 2018). However, guidance remains limited and there may be other factors that make this a complex situation when considering fire spread.

Figure A/B-15 Example of green balconies - Urban Forest, South Brisbane (Wilkes, 2020)

A/B-10. Effects of fire spread and fire performance

A/B-10.1 The cons

Balconies can have a detrimental effect on fire spread several ways:

- **They may contribute to fire spread**, especially if made of combustible elements and/or loaded with combustible content. Several fires have occurred over the last 30 years and highlighted this risk – refer to Section A/B-11. The amended Building Regulations have limited significantly the use of combustibles on balconies on new relevant buildings over 18 m in height (refer to Section A/B-12.1); however, combustible products and materials can still be used in buildings less than 18 m in height.

  Also, the amended Building Regulations only address the elements forming part of the balcony build-up. The challenges of controlling fire load and sources of ignition introduced by residents, particularly where this is not covered under the RRO, mean that these fires are not going to likely to vanish in the foreseeable future.

  It must be noted that, while it is common knowledge that fire travels upwards and balconies can promote this fire spread, they can also lead to lateral (for instance in balconies shared between apartments and separated by non-fire resisting partition) and downwards fire spread – refer to Section A/B-11.

- **It may be challenging to maintain the continuity of the fire stopping / cavity barrier** between the compartment floor and balcony due to the elements going through this zone (e.g. balcony support, cladding support, water drainage, etc.).
- **They may collapse when exposed to a fire** if not fire resisting which could have a significant impact on fire-fighters entering the building or people escaping at ground floor level. While this type of incident is rare, it has happened and therefore should not be neglected.

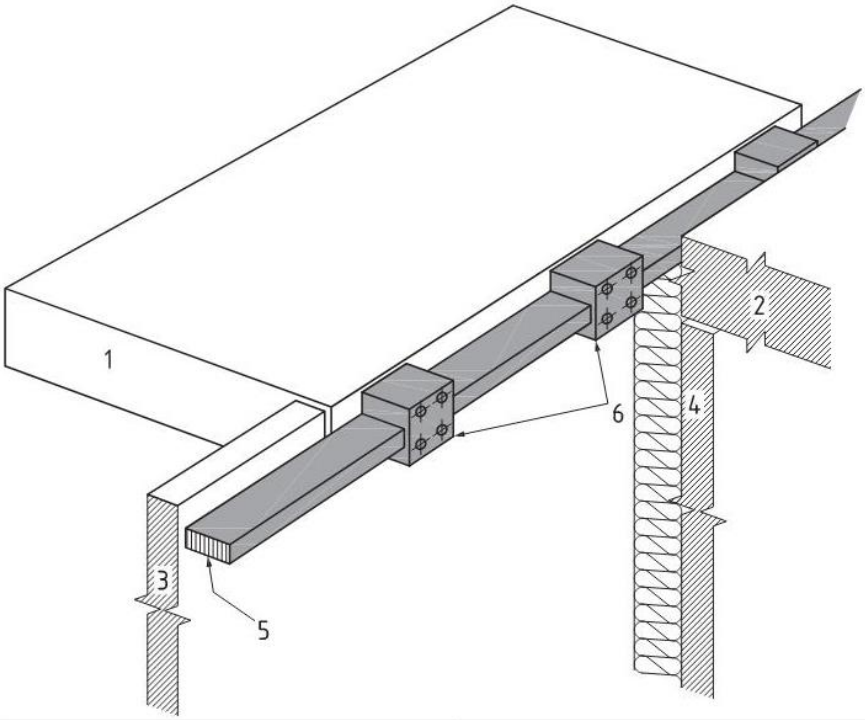

Key

1	Zone of balcony structure	4	Zone of inner leaf or backing wall
2	Zone of building structure or separating element	5	Zone of cavity barrier or fire stopping (see 12.1 on which is applicable)
3	Zone of outer leaf or cladding	6	Zone of load transferring bracket acting as cavity barrier or fire stopping (see 12.1 on which is applicable)

Continuity of cavity barrier or fire stopping

Figure A/B-16 Projecting balconies and protection from fire (extracted from BS 8579:2020)

- **Falling burning elements** can also have an impact at ground floor level as well as contributing to downward fire spread.
- **Unprotected balcony structure connected to the primary structure of the building** may buckle when exposed to a fire, and thereby affect the overall building structure. It can also create a thermal link between the unprotected balcony structure and the protected building structure.
- **Balconies used as means of escape may also become affected by smoke** if smoke was to spread laterally rather than outwards and upwards. Balconies can also be affected by smoke at higher levels depending on the specific circumstances.

Figure A/B-17 External fire spread – Benefit of balconies in external fire spread – example of a fire in Berlin (Nilsson and Mossberg, 2016)

A/B-10.2 The pros

While balconies have received negative media attention for their contribution to fire spread due to recent fire events, they can limit external fire spread. Various studies have been carried out on this topic and have shown the potential benefits of balconies on external fire spread when designed for that purpose.

The benefits of balconies in limiting external fire spread are taken into account in the fire regulations of several countries worldwide and this is detailed in Section A/B-12.
Figure A/B-17 provides an example of a benefit of fire rated balcony in limiting external fire spread. In this case, the fire started in a commercial unit and only damaged the area on the first floor not protected by a balcony. The benefit of balconies when designed to limit fire spread is recognised in various countries as detailed in Section A/B-12.5.

A/B-11. Past fires

A/B-11.1 Introduction

Balcony fires are not unknown in the UK. For instance, London Fire Brigade (LFB) reported that, over the last three years, 550 balcony fires were reported in London alone. This section examines some of these fires that occurred in the UK recently. These fires were selected based on the availability of information, such as:

- Balcony type,
- Balcony construction material,
- Propagation of fire to the cladding, flats, and other balconies, and
- Level of damage.

The research was based on internet searches and a report (not available in the public domain) prepared by LFB. This report, i.e. (London Fire Brigade, 2020b), provides valuable information about several fires. The level of information varies from one fire to another, and details can be missing such as whether the fire started on the balcony, or the balcony became involved following a fire starting within the building. Also, no information was provided regarding the building types and whether they are blocks of flats or other building types. These incidents have therefore been selected because the fire was reported in accessible sources of information and sufficient details are available. Thus, this does not exclude the possibility that additional incidents have occurred involving other reasons and balcony types but have not been reported.

This section also examines several balcony fires that have occurred outside of the UK. This research was limited as the design specifications, the associated fire safety measures and also the use of the balconies may differ from what is typical of the UK.

Table A/B-2 Past fire incidents on balconies

Location	Year	N° of floors	Building construction	Balcony type	Balcony construction	Fire location	Damage balcony of origin	Fire spread to the flat of origin	Fire spread to the external cladding (balcony of origin)	Further propagation
Gooch House, Hackney, London	2019	17	Concrete	Open projected balcony	Concrete	Floor 8 balcony	80% damage	Yes	No	No
	Description: Failure of UPVC window and glass separating the balcony from the property (Fire Investigation Team, 2019).									
Venice House, Wembley	2019	14	Concrete frame construction, with rainscreen cladding and metal external wall finish type	Open projected balcony	Unknown but presence of wooden decking and glass panels on three sides	Floor 13 balcony	Damage to the wooden decking	No	Yes	No
	Description: Some upward fire spread on the external cladding of the building and the combustible insulation behind (Fire Investigation Team, 2019).									
Camley Street, London	2019	9	External cladding combination of brick, glazing and metal	Recessed open and closed balconies	Unknown but presence of wooden decking	Floor 4 balcony	10% damage	No	No	No
	Description: Smoke entered the premises, but the fire did not spread beyond the balcony (Fire Investigation Team, 2019).									
Clifton Court, Islington	2019	16	Concrete construction	Open projected balcony shared between two flats	Concrete construction	Floor 9 balcony	100% damage	No	No	No
	Description: Failure of window during the fire caused the spread of smoke into the flat and consequent damage (Fire Investigation Team, 2019).									
Packington Square, Islington	2019	6	External cladding combination of brick, glazing and metal	Open projected and recessed balconies	Glass panels on three sides for open projected; and glass panels front side for recessed balconies	Floor 4 balcony	100% damage	Yes	No	No

	Description: The fire spread beyond the balcony was reported to be due to the window left open, which allowed the spread of smoke within the building. The fire however was contained to the flat of origin (Fire Investigation Team, 2019).									
West Hampstead Square, London	2018	6	Traditional reinforced concrete frame/brickwork	Open projected balconies	Steel frame with aluminium facia and composite decking and plastic soffits with toughened balustrade glazing	Floor 3 balcony	Damaged on several floors but percentage unknown	Yes	Yes	Yes
	Description: Fire spread vertically upward and affected balconies on three floors. The second floor and podium balconies were also damaged due to falling of burning debris. The glazing units of all four balconies were destroyed while only the balconies steel frames remained. The windows located either side of the balconies sustained heat and smoke damage. The fire affected 5 apartments and resulted in the activation of sprinklers (Fire Investigation Team, 2019).									
Trellick Tower	2017	31	Concrete structure	Open recessed balcony	Concrete construction	Floor 27 balcony	Damaged but the extent is unknown	Yes	No	No
	Description: The glazed door separating the balcony from the kitchen failed leading to the fire spread to the kitchen (london-fire.gov.uk). Smoke detection within the flat did not work.									
The Norton, Greenwich	2015	11	Unknown	Open projected balcony	Glass panels on three sides, wood plastic composite (wpc) decking, aluminium soffit.	Unknown, lower balcony	Damaged but limited	No	No	No
	Description: According to (Sapphire, 2019), the aluminium soffit in place restricted the oxygen flow to the fire, hence no further fire spread with the main structure of the balcony (london-fire.gov.uk), (Sapphire, 2019).									
Notting Hill	2019	15	Concrete frame construction with brick cladding	Open recessed balcony	Concrete balconies	Floor 13 balcony	Damaged, but unknown extent	Yes	No	No
	Description: The flat of origin was partly damaged to an unknown extent (london-fire.gov.uk).									
Fulham	2020	5	Unknown	Unknown	Unknown,	Floor 4 balcony	Damaged, but unknown extent	No	No	Yes

	Description: A small area of the balcony underneath the balcony of fire origin was damaged by fire.									
unknown	2010	16	Concrete	Recessed open balconies	Concrete	Floor 12 balcony	Damaged, but unknown extent	unknown	unknown	Yes
	Description: The fire started and spread from the balcony of origin to the 15th floor and the roof. The source of fire was unknown, but it was concluded in the BRE report that several features of the building had contribution in the spread of the fire, i.e. combustible insulating panels cladded onto the underside of the balconies; cladding panels installed on the outer surface of the exterior wall comprised of mineral fibre board face supported on timber battens with a fibrous combustible insulation materials behind it; plastic drain pipes installed on the corners of the building and passed through the concrete floor slab on each floor. According to the BRE report, there was no evidence of fire stopping, proprietary seal or sleeve for the pipes passing through the floor slabs of the balcony (Holland et al., 2016c).									
Unknown	2011	16	Predominantly concrete construction; variety of unknown cladding systems on the external surfaces. The cavities were filled with different rigid foam insulation.	Recessed open balconies	Concrete slab extension of the main structure covered with timber decking on timber battens; polyethylene spacer rings; foam insulation covered by a woven plastic sheet	Floor 6 balcony	Damaged, but unknown extent	No	Yes	Yes
	Description: Plastic was first ignited, and the fire spread to the foam insulation under the decking. The foam insulation was consumed, and the fire furtherly spread to the insulation behind the cladding systems of the external wall. The fire also spread to the balcony ceiling which contained expanded polystyrene behind the render. The fire also affected the balcony of the neighbouring flat on the same level (Holland et al., 2016c).									
Unknown	2015	13	Concrete construction with timber/veneer façade	Unknow but assumed to be an open type	Continuous balconies running the full length of the building with the flat boundaries separated with aluminium and glass privacy screen. The decking was redwood timber	Floor 3 balcony	Damaged, but unknown extent	No	Yes	No

	Description: The fire ignited the balcony decking and spread to the timber/veneer façade. Based on the BRE report, the fire spread beyond the privacy screen of the neighbouring balcony but was contained to the area of the fire origin. The damage due to the fire was limited to the external balcony and façade on the third floor, and did not involve the underside of the balconies (Holland et al., 2016c).									
Wharfside, Wigan	2015	6	Timber frame building	Open projected balcony	Metal frame with unknown decking	Top floor	Damaged	Yes	Yes	Yes
	Description: The fire was caused by a barbeque on a balcony of the top floor. The wooden-framed structure allowed the fire to quickly spread to affect a significant part of the building (BBC, 2015). Extensive demolition and reconstruction works were required to address significant damage several apartments within the building complex (BBC, 2015).									
Samuel Garside House, Barking	2019	6	Timber cladding	Open recessed balcony	Timber frame and a plastic mesh	Unknown	Damaged	Yes	Yes	Yes
	Description: This fire caused significant damage to the building and completely destroyed 8 apartments. The fire spread from one floor to another due to the presence of combustible timber cladding and black plastic mesh on the balconies (Simpson, 2020).									
The Cube, Bolton	2019	6	High-pressure-laminated cladding	Open recessed balcony	High-pressure-laminated material	Floor 6 balcony	Damaged	Yes	Yes	Yes
	Description: The fire rapidly propagated both upwards and downwards due to burning falling debris. After reaching the roof of the building, the fire spread horizontally to involve the entirety of the roof (Greater Manchester Fire and Rescue Service, 2020).									
Draguignan France	2019	5	Concrete frame with timber cladding	Open projected balcony	Concrete	Unknown	Damaged	Unknown	Yes	Yes
	Description: The fire spread throughout the entire façade within 10 minutes. While the building was structure was non-combustible, the combustible timber cladding and the fire load on the balconies are mentioned as two of the main causes of this rapid fire spread (Lacas, 2019).									
Mermoz Tower fire, France	2012	18	Concrete structure	Open recessed balcony	Concrete with but combustible cladding	Floor 1 balcony	Damaged	Unknown	Yes	Yes
	Description: The fire quickly spread up to the 18th floor (Dosne, 2012). This rapid spread from the initial balcony was due to the presence of combustible cladding and to the geometry of the building with the balconies stacked. Combustible cladding panels were placed as guardrail for the balconies. A chimney effect between the panel and the balconies appeared and thus accelerated the fire spread (Dosne, 2012).									

The fires on balconies presented in Table A/B-2 are selected where sufficient suitable information for the purpose of this report is available. There are, of course, more examples of fires on balcony but with very limited available information. For instance:

- Walworth, 2017 which was a 13-storey residential building with assumed concrete structure and recessed balcony. The fire on the balcony did not propagate further (london-fire.gov.uk),
- Tufnell Park, 2018 which was a 5-storey residential building with concrete balcony (based on pictures available online). The fire developed on the first-floor balcony and caused damage to the balcony above (london-fire.gov.uk),
- Battersea, 2018 which was a 9-storey residential building. The fire spread beyond the apartment of fire origin (london-fire.gov.uk),
- Joiner Street, Manchester, 2017, which was 12-storey residential block with timber balconies. A fire started in an apartment on the ninth floor and spread externally up to the 10th and 11th floors via wooden balconies (BBC, 2017).

The research done also highlighted that one of the most common causes of these fires was discarded cigarettes; however, fridge/freezers and barbecues are also reported.

No fatalities resulting from a balcony fire were observed in this research. This was confirmed in the BRE report (Holland et al., 2016c) which also highlighted that the damage caused by these fires can be significant. This point is also mentioned in research done by University of the Fraser Valley in Canada (Garis and Biantoro, 2019) where it was concluded that, compared to other types of building fires, balcony fires are less likely to kill or injure people while they can lead to more damage to a building.

A/B-11.2 Conclusion

The review of the past fire incidents, presented in Table A/B-2, reveals the points hereinafter:

- All the balcony fires reported, apart from one unknown type (but assumed to be open based on the description) were open balconies, i.e. 47% projected open balconies; 42% recessed open balconies. This be may because fires starting in enclosed balconies are treated as a fire starting within a room and therefore reported as such.
- In 47% of the cases, the fire was mentioned to have spread from the balcony or origin to the adjoining apartment, the external cladding of the balcony of fire origin, and beyond this area.
- 16% of the fires analysed involved timber frame buildings and resulted in extensive damage to the balcony of fire origin and beyond this area.
- Two buildings were provided with timber cladding of which one had more than 50% damage to the balcony of fire origin with fire spread on the external cladding beyond the balcony of fire origin. This building had timber framed balconies with timber decking and battens.

- Four balconies were provided with timber decking, among them three were damaged more than 50% with further propagation of fire to the other part of the external cladding of the building.
- In 21% of the buildings, combustible insulation was reported in the cladding or underneath their balcony decking. In all these buildings, there was further propagation of the fire to the external cladding on the balcony of fire origin and the external cladding on the other part of the building.
- It was concluded that in one of the balcony fires, the aluminium soffit in place restricted the oxygen flow to the fire, hence no further fire spread with the main structure of the balcony to be remained undamaged (Sapphire, 2019).

In conclusion, combustible insulation, combustible cladding, timber and other types of combustible materials forming part of the external envelope of the building or the balcony build-up were, in the majority of cases, mentioned where fire spread to the apartment associated with the balcony of fire origin, beyond that balcony and to the external cladding of the building.

On the other hand, fires that did not spread beyond the balcony of fire origin included, in the majority of observed cases, a solid balcony deck in the form of concrete or other material such as aluminium. However, there are cases where the fire was not contained within the balcony of fire origin despite the presence of concrete decking. In these cases, the concrete deck was insulated/concealed with insulation and cladding panels of combustible materials and covered with combustible decking.

Clearly, the extent of these fires and the associated damage can vary significantly from a localised fire only involving one balcony to a large fire involving the entire façade. The cost can be significant but also the impact on the residents that may need to be relocated depending on the extent of the damage.

Finally, it should be noted that it is too early to assess the impact of the amended Building Regulations, which restrict the quantity of combustible materials in the balcony build-up, on balcony fires.

A/B-12. Balconies in building regulations and fire safety guidance

Throughout the previous sections, it has been established that the fire safety challenges associated with balconies can vary significantly from one balcony to another depending on different factors such as:

- Their role (e.g. means of escape vs private balcony), and
- Their design (e.g. timber vs concrete balcony).

This section examines the functional requirements of the Building Regulations that can have an impact on balcony design and the guidance contained in Approved Document B (AD B).

A/B-12.1 Building Regulations 2010 (as amended)

The amended Building Regulations 2010 class balconies as "*attached to an external wall*" as a 'specified attachment'. Note that not all balconies are 'attached' to an external wall and this term is usually ambiguous for terraces that are usually not attached to the building but form a roof. For instance, a balcony can be formed by the extension of the floor (although rare in modern buildings due to thermal bridging issues), or roof terraces. Refer to Section A/B-3 for the regulatory context, however specific points related to balconies are noted below.

A/B-12.1.1 B1: Means of warning and escape

The functional requirements of the Building Regulations in terms of means of warning and escape are as follows:

> "*The building shall be designed and constructed so that there are appropriate provisions for the early warning of fire, and appropriate means of escape in case of fire from the building to a place of safety outside the building capable of being safely and effectively used at all material times*."

This functional requirement shall be considered for balconies used as means of escape as they must offer an adequate level of protection to the residents in the event of a fire. The key points to consider are:

- The protection against smoke which may affect the occupants due to reduced visibility, high temperatures, toxicity; and
- The protection against thermal radiation, especially where openings (windows) are provided between the balcony and the apartment of fire origin which could expose residents escaping past these to high temperatures.

These points need to be considered in the event of a fire within an apartment/flat but also in the event of a fire on the balcony used as a means of escape (e.g. by limiting/forbidding the fire load).

A/B-12.1.2 B3: Internal fire spread (structure)

The functional requirements of the Building Regulations in terms of internal fire spread which have to be considered when designing balconies are as follows:

> "*(1) The building shall be designed and constructed so that, in the event of fire, its stability will be maintained for a reasonable period*
>
> […]
>
> *(3) Where reasonably necessary to inhibit the spread of fire within the building, measures shall be taken, to an extent appropriate to the size and intended use of the building, comprising either or both of the following—*
>
> > *(a) sub-division of the building with fire-resisting construction;*
> >
> > *(b) installation of suitable automatic fire suppression systems*."

Clause (1) is related to the structural fire resistance of balconies and applies, first of all, to balconies used as a means of egress for the residents and access for the fire and rescue services. These balconies are to remain in place during the evacuation of the residents and the intervention of the fire service in the event of a fire.

This requirement shall also be considered when designing private balconies (i.e. balcony not used as a means of escape). Indeed, a balcony collapsing due to structural failure when exposed to a fire could:

- Impact people at ground floor level evacuating or the fire and rescue services;
- Damage the primary structure of the building; and/or
- Contribute to downward fire spread.

Clause (3) is related to compartmentation which is a key element in residential buildings as only people of the apartment of fire origin are often likely to evacuate. The fire must therefore be contained in the apartment of fire origin and not affect adjacent apartments or the common means of escape. As detailed in the section related to past fires (Section A/B-11), balconies fire can lead to external fire spread beyond the balcony of fire origin. The fire can then re-enter the building via a separate compartment/apartment. This risk must be considered to ensure compliance with B3.

A/B-12.1.3 B4: External fire spread

The functional requirements of the Building Regulations in terms of external fire spread are as follows:

> *(1) The external walls of the building shall adequately resist the spread of fire over the walls and from one building to another, having regard to the height, use and position of the building.*
>
> *(2) The roof of the building shall adequately resist the spread of fire over the roof and from one building to another, having regard to the use and position of the building.*

Clause (1) has a direct impact on balcony design as, as previously highlighted, balconies can affect the way fire spreads across the façade of a building. It is also clearly mentioned that the height and use of the building must be considered when looking at external fire spread. This is a key consideration as these two parameters will influence the evacuation and fire-fighting in the building:

- The height of the building can have an impact on the number of people at risk within the building and the distance to reach a place of ultimate safety (i.e. outside). It will also affect fire and rescue service intervention as a high-rise building will require internal access rather than with a low-rise building in which the fire and rescue service may be able to carry out their operations from outside.
- The use of the building will affect:
  - The pre-evacuation time in the event of a fire (time taken by the occupants to react to a fire/warning and start to make their way towards an exit). For instance, this time will be far greater in a residential building where the residents may be asleep in the event of a fire than compared to an office block with a good level of management where occupants are expected to react quickly.
  - The overall evacuation time as, traditionally, in residential buildings, only the residents of the apartment of fire origin are expected to evacuate. If a full evacuation was required, in most buildings of this type, it would require an action from the fire and rescue services which may have to knock on everyone doors due to the absence of a common alarm system.
  - The high level of compartmentation in residential buildings can also benefit the fire and rescue services as the fire should be contained in the apartment of fire origin.

Limiting the risk of fire spread outside the apartment of fire origin is therefore key in residential buildings and thus balconies design must take into account that consideration. The risk of external fire spread is directly linked to functional requirement B3 as it could lead to early compartmentation failure.

A/B-12.1.4 B5: Access and facilities for the fire service

The functional requirement of the Building Regulations in terms of access and facilities for the fire and rescue services is as follows:

> "*(1) The building shall be designed and constructed so as to provide reasonable facilities to assist fire fighters in the protection of life*."

The objective of this functional requirement is similar as B1 (means of escape) except that B5 is related to the protection of the fire and rescue services and not the residents and therefore the tenability criteria may be different due to the protective equipment and training available to fire and rescue service personnel. In addition, facilities may be required to assist with intervention (e.g. fire-fighting water mains).

A/B-12.1.5 Regulation 7 – Materials and workmanship

As discussed previously, up to 2018 when Regulation 7(2) was updated, Part B4 of the Building Regulations, like any other parts, was only giving objectives to achieve in terms of

fire safety but was not describing how to achieve these. Since Regulation 7(2) amendment, requirements have been added. In summary, any element forming part of a balcony attached to a building must now achieve Euroclass A2-s1, d0 or A1. This has had a major impact on the balcony industry and halted the use of combustible elements (unless exempt under Regulation 7(3)) such as timber joists, combustible decking, combustible balustrades, etc. in any residential buildings with a height measured between the lowest ground level to the top habitable floor of 18 m or more. As seen in Section A/B-8, combustible materials could be extensively used in balcony design and as such this requirement has had an important impact on the way balconies are now designed. However, the different parties interviewed as part of this project acknowledge that the industry involved around balconies has reacted quickly and it is now possible to design balconies compliant with the amended Building Regulations.

A/B-12.2 Approved Document B (AD B)

AD B defines ‘common balcony’ in Annex A as:

> *“Common balcony: A walkway, open to the air on one or more sides, that forms part of the escape route from more than one flat.”*

From a means of escape perspective (B1), Section 3.29 of AD B refers to BS 9991:2015 regarding the applicable guidance for this type of means of access:

> *3.29 Paragraph 3.27 may be modified using the guidance in clause 7.3 of BS 9991.*

Note that the mentioned Paragraph 3.27 deals with means of access via an enclosed corridor.

In terms of external and internal fire spread, while balconies are not explicitly mentioned in AD B, the followings points have an impact on their design:

- The provision of fire stopping at compartment floor level (AD B, 7.12) to limit the risk of internal fire spread from one floor to another. These elements are usually located where the balcony structural supports are fixed back onto the structure of the building. This zone is therefore usually congested and installing fire stopping as per manufacturer’s specifications so that they form a continuous separation can be difficult.
- The provision of cavity barriers at compartment floor level (AD B, 8.3) to limit the risk of external fire spread. As for the fire stopping mentioned in the first bullet point, these elements can be breached by the balcony structural supports. The difference between cavity barriers and fire stopping in external wall is shown in Figure A/B-18 below. The difficulties regarding the installation of fire stopping mentioned above are also valid for cavity barriers.
- The limitations in terms of the fire performance of the elements forming part of the external wall as mentioned in the previous section.

Regarding the latest point, Section 10.15 of AD B provides additional guidance for the classification of membranes which should achieve Euroclass B-s3, d0 while they are excluded from the requirements of Regulation 7. This specification in AD B applies to external walls and specified attachments are not mentioned.

The guidance does not provide any specification related to the fire resistance rating (load-bearing R, integrity E or thermal insulation I) of the balcony itself.

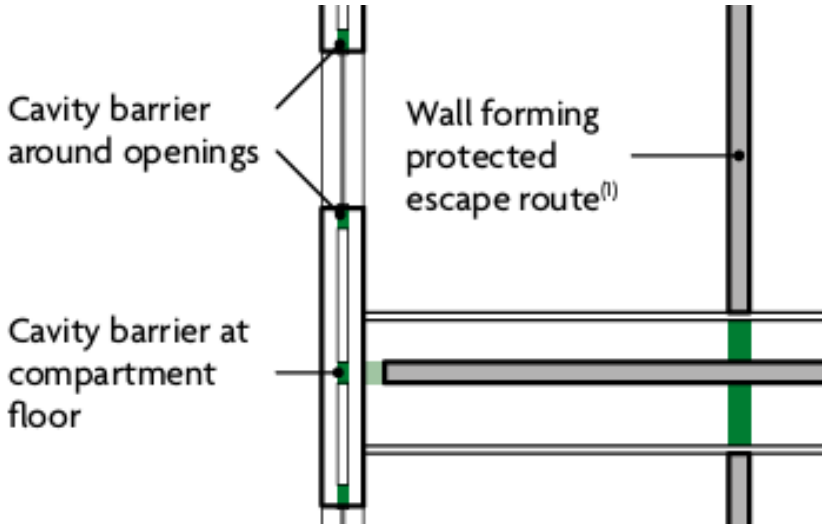

Figure A/B-18 Extract from Diagram 8.1 of AD B

Several questions can therefore be raised from this review:

- Should AD B define balconies (and terraces) or refer to a standard defining them such as BS 8579?
- Should the guidance contained in BS 9991, and reviewed hereinafter, be directly incorporated into AD B to limit the 'pick and mix' approach between several documents (BS 9991, Section Foreword)?
- Is the absence of fire rating (REI) requirements of private balconies in ADB suitable? The rationale behind the absence of requirement is unknown by the consortium at this stage. It could be due to:
    - The fact that balconies were in majority made out of concrete at the time where modern Building Regulations introduced the principle of fire resistance. This material inherently achieves a certain level of fire resistance, unlike modern lightweight materials such as aluminium, or,
    - The risk of collapse in the event of a fire was considered as low or as having low consequences on the building occupants or fire service.

  The absence of fire rating could have an impact on:
    - The building primarily structure where the balcony supports are fixed. Indeed, these supports could be heating up by conduction the primarily structure of the building when exposed to a fire,
    - On people at ground floor level (fire and rescue service personnel and people evacuating the building) if the balcony were to collapse,
    - Downward external fire spread as burning elements could ignite elements located underneath, and
    - Lateral fire spread in the case of adjoining balconies.
- In terms of reaction-to-fire, the '18 m height' rule has a significant impact on the design of balconies. Is this rule suitable? i.e.
    - Is the absence of restrictions below 18 m suitable in residential buildings?

- For buildings over 18 m in height, is allowing only materials achieving Euroclass A2-s1, d0 suitable or can there be more flexibility? If so, on what basis? Note that this question does not only have an impact on AD B but also on the Building Regulations.

A/B-12.3 BS 9991: Fire safety in the design, management and use of residential buildings

Section 7.3 of BS 9991: 2015 gives various recommendations regarding the design of common balconies from a fire safety perspective. They aim at:

- Limiting the risk of smoke compromising this space with:
  - A minimum area of opening of 50% - balconies with less than 50% opening should be treated as an inner room,
  - A minimum opening height of 1.1 m from the balustrade to the soffit above,
  - Imperforate walking surface, and
  - For balconies wider than 2 m, the provision of downstand directing smoke to outside and preventing it from spreading laterally along the balcony. The depth of these downstands should be between 0.3 m to 0.6 m or determined using BS 7346 and BRE 368.
- Ensuring that the balcony remains in place if exposed to a fire by recommending a fire resistance of REI 30.

Where a single means of escape is available, further provisions apply to limit the risk of a fire preventing people from escaping:

- The face of the building (excluding window openings) should provide at least 30 min fire resistance,
- Doors opening onto the balcony should be FD 30 self-closing doors,
- Window openings should not extend below a height of 1.1 m above the deck level,
- The external balustrade should be imperforate, and
- Surface materials of the facing wall, balcony soffit and balustrade should be of a Class 0 rating.

Regarding the last point, surface materials should now achieve Euroclass A2-s1, d0 as a minimum.

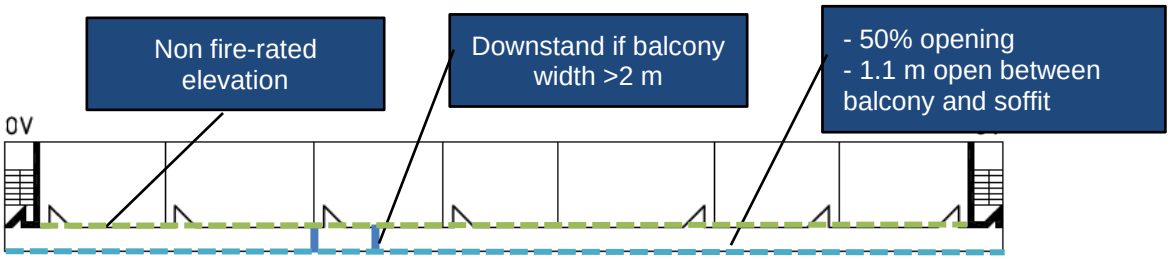

Figure A/B-19 BS 9991 specifications – Alternative means of escape available

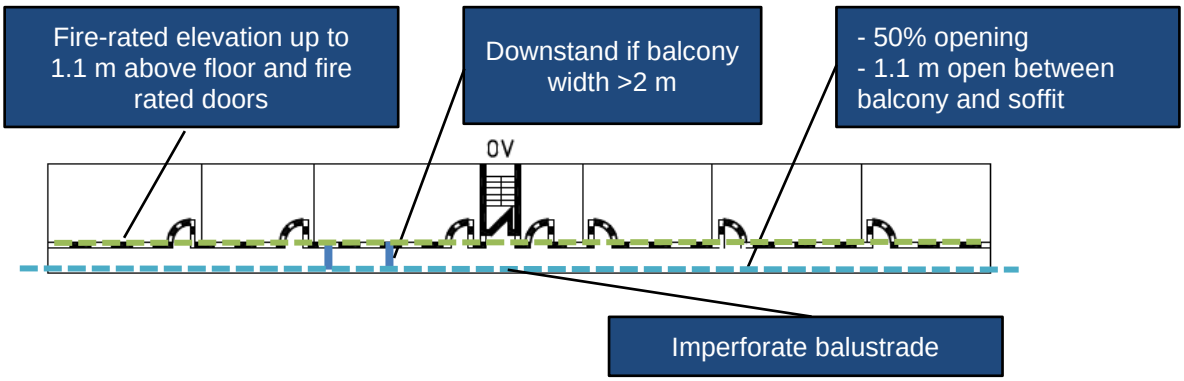

Figure A/B-20 BS 9991 specifications – alternative means of escape available

Guidance on private and communal balconies is also provided in Annex D of BS 9991. Several points are highlighted to control the risks associated with fire:

- Private balconies:
  - Storage (unless enclosed with fire-rated construction) and other fire risk should be avoided,
  - Enclosed balconies should be treated as inner rooms. As such, they should be enclosed with fire compartment walls and floors,
  - Measures are specified to ensure that people can escape in the event of a fire in the access room (e.g. detection, travel distance limitations, etc.), and
  - Measures are specified to ensure that people in the balcony can escape in the event of a fire within the apartment (e.g. detection, travel distance limitations, etc.).

The other specifications contained in AD B and mentioned in the previous section are also incorporated in BS 9991; although BS 9991 has not been revised yet to include the requirements from Regulation 7(2) it remains applicable. At the time of writing, BSI has convened a committee to revise BS 9991.

The questions raised as a conclusion to the previous section can still be applied to BS 9991. In addition to those, the following should be studied:

- The use of private balconies is challenging to control as seen previously and highlighted by LFB. Should the guidance consider that a fire will start on this space

and incorporate measures to reduce the impact of such a fire on the rest of the building?

- The guidance does not give any recommendations to address the risk of lateral fire spread from balcony to balcony. Some past fires showed that fire can spread upwards and downwards but also laterally. This can be influenced by the continuity of combustible cladding, decking; insulation, etc. but also by potential combustible stored on balconies by the residents. Should this risk be considered?
- Is the 50% opening rule to differentiate an open to an enclosed balcony suitable?
- Are the measures to prevent the balcony from smoke logging sufficient? Especially the minimum width of a downstand that can vary from 0.3 m to 0.6 m.
- Is 30 min fire resistance for the balcony deck sufficient for means of escape and fire-fighting access?
- Is the approach of fire rating the separation provided between balconies and apartments up to 1.1 m in height suitable? This assumes that people will crawl when escaping past a non-fire rated window.

A/B-12.4 BS 8579: Guide to the design of balconies and terraces

The recently published BS 8579:2020 standard has been developed to assist designers of balconies and covers fire safety. Due to its recent publication (Aug 2020), this standard is not mentioned in the latest version of AD B. It highlights the different risks that have been mentioned throughout this report, namely:

- Contribution to external fire spread,
- Risk of falling burning elements that could lead to downward fire spread,
- Risk of falling elements that could affect people at ground floor level, and
- Risk of affecting the overall structure of the building due to deformation of the balcony structure when exposed to a fire.

The standard recommends treating enclosed balconies in a similar manner as internal rooms; i.e. by enclosing them with compartment walls and floors.

The guidance in terms of reaction-to-fire goes beyond those specified in the Building Regulations (refer to Section A/B-12.1) as it recommends the use of Euroclass A2-s1, d0 materials in all buildings over 11 m in height (instead of 18 m) and in buildings of any height when balconies are stacked. It also does give an option to assess combustible laminated glass (see Part C) and thermal breaks using a risk-based approach.

The document also recommends the provision of imperforated tray soffit with two objectives in mind:

- Limit the risk of falling burning items, and
- Deflect flames outwards from an opening below a balcony to reduce upward fire spread.

Finally, the standard highlights the complexity of the fire stopping at slab level, of water drainage and of cavity barriers where precautions must be taken when designing and installing these elements to ensure that they will perform adequately.

A/B-12.5 BS 9251: Fire sprinkler systems for domestic and residential occupancies

The inclusion of sprinklers as a way to control fires on balconies is also regularly mentioned. BS 9251, the British Standard code of practice for the design of sprinkler systems in residential buildings, currently excludes balcony coverage in Section 5.4. The use of external sprinklers can be challenging to design due to the exposure to external elements (e.g. risk of pipes freezing).

A/B-12.6 International approaches

A/B-12.6.1 Separation of openings to limit fire spread

In order to limit the risk of external fire spread between successive compartment floors, some countries require the implementation of construction solutions in the form of either (Figure A/B-21):

- A minimum distance between unprotected (non-fire rated) areas of the same vertical line of successive floors. This may require the addition of solid fire resisting upstand or downstand at slab level, and fire resisting glazing designed in accordance with EN 1364 – Part 3, etc; or
- If a balcony or horizontal projection from the façade is provided and has the necessary construction characteristics and minimum fire resistance, the distance between openings can usually be reduced by the span of that element.

Note: this section focuses on horizontal projection only; further details about the minimum vertical distance that can be provided between openings can be found in the Section A/B-18.6.

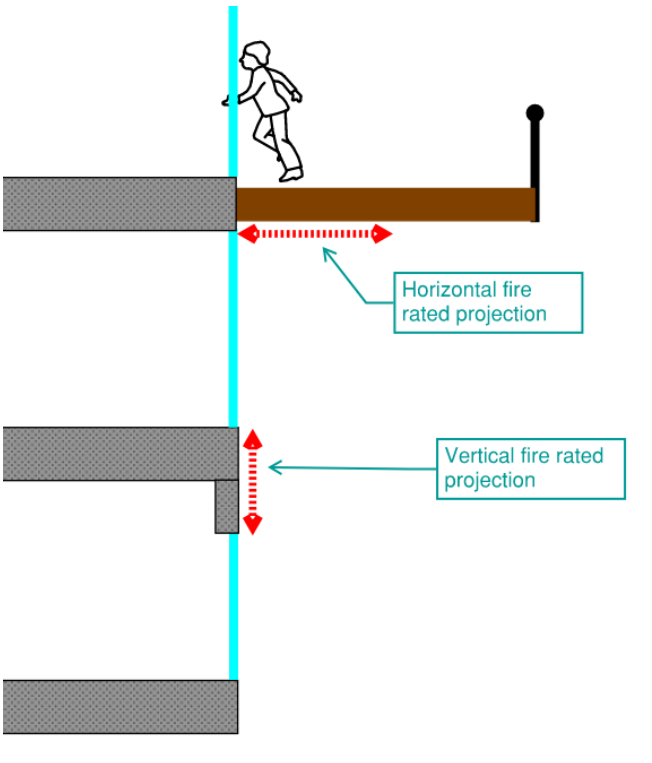

Figure A/B-21 Vertical separation of openings to limit fire spread – Horizontal vs. vertical separation

Table A/B-3 presents the approach in various countries which require a vertical or horizontal projection (the table only focuses on the horizontal projection). It can be seen that the dimensions of this projection vary from one country to another. It is also interesting to note that some countries recognise the benefit of sprinklers and gives this as an option to omit the vertical or horizontal fire rated construction.

Table A/B-3 Horizontal projection to limit fire spread – International perspective primarily taken from (Morgado and Rodrigues, 2015a)

Country/Region	Horizontal projection (m) e.g. balcony	Note
Australia	1.1	Non-combustible horizontal projection with a fire resistance of 60/60/60, having an extension at least 450 mm along the wall. Building Code of Australia (BCA) Volume One
Belgium	0.6	60 cm horizontal E 60 projection The Belgian Royal Decree of 7 July 1994 (and its modifications)
Denmark	-	There are no prescriptive requirements presented in the building regulations in regard to the external vertical fire spread.
Finland	-	There are no prescriptive requirements presented in the building regulations in regard to the external vertical fire spread.
France	0.6-1.3	The minimum fire resistance of the facade and balcony depend on the number of stories while the dimensions depend on several variables (building use, classification, etc.) (French Government, 2011, 2010, 1986, 1980).
Hong Kong	0.5	Fire resistance rating not less than the one of the floor Code of Practice for Fire Safety in Buildings
New Zealand	0.6	Same fire resistance as the one required for the compartment floor. The New Zealand building codes also provides a table with further combinations of different spandrel heights and projection lengths. An exception of the above is when the rooms are sprinklered. Acceptable Solution for Buildings with Sleeping (non-institutional)
Norway	1.2	No projection required if the building contains an automatic sprinkler system.
Portugal	1.1 – the depth of the horizontal projection	Minimum fire resistance of EI 60.
Spain	1.0 – the depth of the horizontal projection	Minimum fire resistance of EI 60.
USA	0.76	60 min fire resistance minimum NFPA 5000 2021

A/B-12.6.2 Reaction-to-fire

Another parameter that can influence the contribution of balconies on external fire spread is the combustibility of different balcony components. Mikkola (Mikkola, 2013) published a paper providing the limitations in various countries for buildings consisting of three floors or more. It can be seen in Table A/B-4 that while all countries studied have restrictions, they vary significantly from one country to another.

Table A/B-4 Reaction-to-fire of balconies for buildings with at least 3 floors

Country	Balcony classification					Notes
	Walls	Ceilings	Column/ beams	Handrails	Flooring	
Austria	D-s3, d1	D-s3, d1	NR	NR	NR	Up to 22 m in height
	A2	A2	NR	NR	NR	Over 22 m in height
Switzerland	D	D	NR	D	D_{fl}	
Germany	C-s3, d1	C-s3, d1	NR	NR	NR	
Finland	B-s2, d0	B-s2, d0	B-s2, d0	D-s2, d2	D_{fl}-s1	8 floors maximum
Norway	D-s3, d0	D-s3, d0	D-s3, d0	D-s3, d0	D_{fl}-s1	4 floors maximum
Sweden	C-s2, d0	B-s1, d0	D-s2, d0	D-s2, d0	D_{fl}-s1	Class D-s2, d0 for walls and ceilings when the building is provided with sprinklers
Canada	D	D	D	D	D_{fl}	4 floors maximum

NR – No restrictions

A/B-13. Review of research literature

A/B-13.1 Fire statistics

As previously noted in Section A/B-2, there appears to few statistics available on fires associated with balconies. However, in the analysis of apartment fires in the US in 1993 Hasofer and Thomas (Hasofer and Thomas, 2006) found that ‘exterior balcony, open porch’ fires accounted for 1.85% of all fires. Casualties occurred in 2.18% of fires on balconies/porches and this was the lowest of all the categories investigated in their study.

A/B-13.2 Balcony contribution to external fire spread

As discussed in Section A/B-12.6.1, several countries require a minimum distance between openings to limit the risk of external fire spread. Where horizontal fire rated projections are provided, which can be in the form of balconies, this vertical distance can be reduced. The origin of this approach is thought to come from studies carried out in Japan in the late 1950s and early 1960s. The authors of this report continue to investigate this topic.

Some specific studies are dedicated to the impact of balconies or similar horizontal elements attached to a façade. They focus mainly on non-combustible elements such as concrete structures but address interesting results and tendencies on the influence of horizontal deflectors in case of fire. These results can help with dimensioning combustible balconies, since mass flow rates of hot gases under the deflector, or heat fluxes imparted on the horizontal structures are given. Nevertheless, no specific literature has been found which would directly address the case of combustible balcony fires.

A conclusion drawn based on the information provided in (Nilsson, 2016) is that the level of protection of the building regulations differs between the countries and there is very little consensus on the protective measures between the countries. Section A/B-12.5 of this report summarises the rules applicable to several countries regarding the fire rating of balconies. The results from (Nilsson, 2016) are primarily based on numerical simulations using a relative comparison against previously conducted research. In the simulations, different non-combustible horizontal balcony projections, ranging from 20 to 100 cm deep, were used together with different openings. These configurations were assessed at several heat release rates. It was concluded that the use of at least a 60 cm deep horizontal projection results in lesser consequences and lower risk levels compared with Swedish building regulations (BBR). The use of horizontal projections deeper than 60 cm resulted in 15-50% reduction in the relative exposure of surface temperature at the facade, 1.2 m above the underlying opening. The conclusion however supported the idea behind the prescriptive solutions used in New Zealand since the codes state that spandrels may be omitted if a horizontal projection is constructed projecting no less than 60 cm, otherwise a spandrel height of 1.5 m is required. In the case of the Swedish building regulations, the 1.5 m requirement would have been replaced with 1.2 m.

Some scientific reports highlight other important aspects of the design of a balcony, signalling that not only the depth of the balcony is of importance. In (Mammoser III and Battaglia, 2004), a numerical study investigates the influence of both different depths of balconies and how the rest of the balcony geometry impacts on the vertical fire spread. After performing numerical simulations for scenarios containing each of the different balcony types, it emerged that a rectangular balcony with open non-combustible railings and completely open sides apart from the railings, gave the best protection. This was because the hot gases were projected away from the façade more effectively compared to the more enclosed balconies with solid railings and separation walls. The latter balcony type was shown to trap the hot gases at floor levels above the fire floor and thus increase the rate of vertical fire spread.

In (Morgado and Rodrigues, 2015b), the authors performed large-scale fire tests to validate the fire safety regulations in Portugal regarding fire protection of building facades. The results showed that the presence of a fire resisting balcony wider than the window resulted in lower temperatures in the wall above compared with the other balcony type and consequently the wider balcony type was considered more viable.

Oleszkiewicz (Oleszkiewicz, 1991) concluded that a spandrel of 2.5 m was needed to achieve a 50% reduction in heat flux to the facade. This means that using spandrels as a protection method for the external fire spread is too impractical. It recognises that horizontal projections are much more effective for that purpose. The positive effects can be noticed with 0.3 m deep projections.

Researchers from the National Research Institute of Fire and Disaster in Japan completed several experimental studies on the effects of balconies on ejected flames (Suzuki et al., 2004). The authors used several scale models to investigate the effect of balconies on fire spread. The experiments showed several interesting results. As the balcony depth increased, the temperature in the room of fire origin increased slightly, which increased the combustion rate and caused the room to flashover more quickly. More importantly, building façade temperature profiles above the fire room illustrated how the balconies projected the flames away from the building façade. Temperatures as low as 70 °C were recorded at the floor above the fire floor with a 25 cm deep balcony. Heat flux measurements at the exterior wall decreased significantly as the balcony depth increased. In a second, more recent experiment the authors used a 1/3 scale model of a four-story apartment building which confirmed those results.

Some research addressed the combustibility and the influence of balustrades and fences on balconies. In (Suzuki et al., 2004), horizontal balconies spanned the width of the façade but also contained solid balustrades and vertical separation walls. Four different types of balconies were identified and classified. The balcony types contained different balustrade and separation wall configurations. Changing the geometry of the balcony had a measurable effect on the vertical movement of smoke and gas. A rectangular balcony, with open, non-combustible balustrades and open separation walls provided the most protection from vertical fire spread. The hot gases were projected away from the façade, reducing the temperatures at higher levels. A balcony with solid balustrades and separation walls was shown to trap the hot gases at floors above the fire floor, making it difficult for trapped

occupants to survive, as well as increasing the rate of vertical fire spread. By determining an ‘enclosure ratio’, which is the exposed surface area within the balcony itself, (Suzuki et al., 2004) were able to correlate the effects of balcony depth and geometry to the probability of fire spread. The results showed a high probability of fire spread as the exposed surface area increased based on increased temperature measurements along the exterior wall. Finally, (Suzuki et al., 2004) conclude that balcony geometries made from wood or other combustible materials could also be investigated.

The authors of (Szikra and Takács, 2018) carried out numerous Computational Fluid Dynamics (CFD) modelling of full-scale elevation fire propagation tests. In this paper, the validation of the CFD model of the Hungarian test method is addressed and is modified to consider French balconies using a certified building product called Pyroswiss® Parapet glass.

The problem of combustible balustrades on balconies is investigated in (Hokugo et al., 2000). A summary of experiments for the investigation of a fire that caused an upward fire spread for over 12 floors through balconies in a high-rise apartment complex is reported. The experiments included indoor tests to obtain fire properties of vertical PMMA fences and outdoor tests with a full-scale model of the balcony. The test results suggest that the increase of the flame height through merging of flames and cooperative effect of the burning of PMMA fences and combustibles on the balconies may be sufficient to cause ignition on the upper floor.

The work of (Hietaniemi and Korhonen, 2005) presents a fire risk analysis on the impact on fire safety of installation of a wooden façade to a suburban residential multi-story building belonging to the fire Class P1 defined in the National Building Code of Finland, which in practice means a concrete framed building. According to a statistical survey covering 1996-2001, external ignitions make up 10% of ignitions in buildings belonging to the fire Class P1, 80% of these external ignitions take place on the balcony. The most important hazard related to fires initiated in a balcony is the fire spread directly into the apartment via a window breakage, which is the case in about every tenth balcony fire. The statistical survey revealed that a couple of fires started in a balcony have spread horizontally, but none upwards.

In (Eagle, 2020), a balcony manufacturer wanted to subject their balcony system to the “*highest possible degree*”. Given that the standard height between building floors is around 3 m, the balcony was set 1.5 m above the fire. They go on to state that “*A house fire burns at circa 600°C. An average bonfire similar to the one used burns at approximately 1100°C – 85% hotter than a standard house fire*”. The validity of this statement can be debated but under the circumstances of their demonstration, the aluminium soffit only withstood the heat for 11 minutes before it began to melt and drop to the ground. The Euroclass A fire-rated decking withstood the fire from beneath for over an hour without being structurally affected and did not spread the fire. It only began to melt when combustible materials were added on top of the balcony. After 2 hours of the test, parts of the decking were still in place, while, in the opinion of those that conducted the demonstration “*traditional timber or composite decking would have set alight in minutes and spread the fire up the building*”. The mild steel vertical infill balustrade did not alter structurally. The 100 mm maximum gap in between the

balustrade infills remained and it was still perpendicular to the balcony structure. While the aluminium panel balustrade support structure did remain in place and would still prevent a fall from height, the aluminium cladding itself did melt in places when subject to direct flames.

Similar testing to (Eagle, 2020) was performed by Sapphire Balconies (Sapphire, 2019). In order to better understand the protective effect of soffits on the balcony in the event of a fire, balcony fire safety testing was commissioned. For one of these tests, a full-size balcony deck using their “Cassette®” system was constructed to fit in the Warrington fire (ex-EXOVA) testing lab furnace. This was fitted with Euroclass C decking (understood to be the most combustible product currently used by Sapphire), and a variety of soffit panels were fitted so the relative effect of these could be monitored. The balcony was then exposed within a furnace to temperatures following the ISO 834 standard fire curve. Where soffits have been omitted or perforated (for architectural or cost reasons) there is clear evidence to suggest the use of Euroclass A decking should be considered to reduce the likelihood of rapid balcony fire development. For the first 20 min there was some smoke penetration, and towards the end of this time the boards started to soften, but no flame was present above the soffit. After 25 min the decking above the steel soffit caught alight. The reason for this catching first was deemed to be because the steel absorbed and radiated the heat above it, while the aluminium soffit reflected the heat, allowing it to stay intact at temperatures well above the stated melting point. After 28 min, the aluminium soffit which could be viewed through the viewing portholes started to melt, exposing the decking above to the full heat of the furnace. The test was finally aborted at 33 min, by which time the furnace temperature was some 850 °C, and the remaining decking caught alight and had to be extinguished. At this stage, the decking was still in place, and most of the top surface still visible however the underside of the boards was heavily charred. To demonstrate the behaviour of the various classifications of decking in a real fire, a further test was conducted where live barbeque coals were placed onto a balcony decking and allowed to continue burning. To summarise the results: Euroclass C decking and Euroclass D timber decking burned through quickly and allowed the coals to fall onto the soffit. The Euroclass B decking took longer to ignite but finally burned through. The Euroclass A decking remained. Of the coals which fell through the decking onto the soffit below, the timber soffit quickly burned through and allowed the coals to fall onto the structure below. The aluminium soffit stayed in place.

A/B-13.3 Conclusion

The findings of the papers reviewed by the consortium are summarised in Table A/B-5. The majority of these documents focus on the impact of fire resisting balconies on external fire spread and acknowledge the benefit of these elements in reducing the risk of fire spread from one floor to another. However, limited research was found related to the combustibility of the balconies and/or non-fire resisting balconies and their potential impact on external fire spread. These points could be further investigated with dedicated experimental studies that could be extended using well-validated numerical tools.

As discussed in the introduction, this literature review was limited and as such further studies may be available. Also, the consortium did not have access to the input and output parameters used as part of these research activities such as the fire scenarios used for full-scale experiments, input files for modelling studies, etc.

Table A/B-5 Literature review summary

Research paper	Research purpose	Findings
Nilsson, 2016	Comparison of the requirements in terms of fire rated balconies and spandrel panels in different countries Numerical studies comparing the impact of horizontal projection of varying depth based on previous research	No consensus between countries regarding these requirements that can vary significantly from one country to another Noticeable reduction of the surface temperature above the opening of fire origin for horizontal projection deeper than 60 cm
Mammoser III and Battaglia, 2004	Numerical assessment of the impact of balconies of different shapes on external fire spread	Rectangular balconies with open railing gave better results than balconies with solid balustrades
Morgado and Rodrigues, 2015b	Large scale test assessing the impact of balconies in external fire spread	Better results in terms of temperatures recorded on the wall above the balcony when this balcony is wider than the opening of fire origin
Suzuki et al., 2004)	Small scale experiment assessing the impact of balconies in external fire spread	The temperatures in the room of fire origin increases with deeper balconies Balconies lead to a decrease of temperatures above the opening of fire origin This phenomenon increases with the depth of balcony
Suzuki et al., 2004	Assessment of the impact of balustrades and fences on external fire spread	Open non-combustible balustrade gave better results than solid ones Notion of ‘enclosure ratio’, representing the exposed surface area within the balcony itself, which correlates the effects of balcony depth and geometry to the probability of fire spread
Szikra and Takács, 2018	Numerical modelling of full-scale test for validation	The numerical study gave representative results of the full-scale test with the methodology used

Research paper	Research purpose	Findings
Hokugo et al., 2000	Impact of combustible balustrades on external fire spread using small-scale test to determine the properties of the material used (PMMA) followed by full-scale test to assess their impact on external fire spread	Increase of the flame height recorded due to the contribution of the balustrade
Hietaniemi and Korhonen, 2005	Statistical survey on fires in residential building with concrete balconies in Finland	Two fires were observed to have spread laterally but none upwards
Eagle, 2020	Real scale test assessing the performance of a non-combustible and non-fire rated balcony	While the aluminium cladding and soffit melted and the balcony was partly damaged, most of the balcony elements remained in place after 2 hours of exposure
Sapphire, 2019	Real-scale test assessing the performance of non-fire rated balcony with different decking and soffit types	Solid aluminium soffit reduces the risk of ignition of Euroclass A, B, and C decking

A/B-13.4 Open vs. enclosed balcony

The origin of the 50% opening value used to define an ‘open- balcony’ has not been found to date by the consortium. This value may be considered in line with the EN 1991-1-2, where the total width of openings is deduced from the aperture rates of the façade. Those rates are taken in a generic way to correspond to 50 and 100% of the facade width. The openings are considered on a single façade.

A/B-14. Overview of fire standards applicable to balconies

A/B-14.1 Structural fire resistance, R

Under Approved Document B (refer to Section A/B-12.2), private balconies (i.e. balconies not used as means of escape) do not need to achieve any fire resistance (loadbearing R, insulation I or integrity E). Only balconies used as means of escape and/or fire-fighting access do. However, as mentioned by a fire stopping manufacturer interviewed, a non-protected balcony support can be connected to the main building structure which is itself fire protected. The connections should be considered as they can create a point of weakness in the fire protection and lead to excessive heat transfer to the building structure in the event of a fire on the balcony.

Balconies used as means of escape should achieve a 30 min fire rating as per BS 9991 (refer to Section A/B-12.3). The fire rating can be determined using the Eurocode series BS EN 199x-1-2 – fire part of structural design method. BS EN 1365-5:2004 also specifies a method for determining the fire resistance, with respect to loadbearing capacity and with no fire separating function of balconies.

The suggested test is based on exposure to the standard fire resistance curve (ISO 834). However, this curve has been developed for fires within buildings which could be considered as onerous compared to a fire on a balcony, which is therefore well-ventilated.

A/B-14.2 Insulation, I, and integrity, E

Two aspects need to be examined when assessing the fire performance of balconies from an integrity and insulation point of view:

- The fire performance of the balcony itself which is usually required for balconies used as means of escape; and
- The fire performance of the fire stopping / cavity barrier between the balcony and the compartment floor.

An interview with a UK specialist in fire stopping and cavity barriers indicated that currently the tests to assess these elements are carried out using BS EN 1366-4:2006+A1:2010 which is relevant to linear joint seals due to the absence of better / more relevant alternatives. This test considers exposure of the tested elements to the standard fire curve (ISO 834) which may seem onerous for a balcony scenario given the large amount of permanent ventilation provided.

Regarding the insulation and integrity performances of the balcony itself, BS EN 1365-2:2014 can be used. However, like BS EN 1365-5 (refer to Section A/B-14.1), this test standard has been developed for floors, as such, for the same reasons as BS EN

1366-4, may been seen as onerous when applied to balconies. The performance of the deck can also be assessed using the Eurocode series BS EN 199x-1-2.

A/B-14.3 Reaction-to-fire

For buildings over 18 m in height, the requirements are clear regarding this point in Regulation 7(2) (refer to Section A/B-12.1), balconies attached to external walls of relevant buildings are to be built using materials achieving as a minimum Euroclass A2-s3, d2 in accordance with BS EN 13501-1:2018.

This approach has one main benefit: it is clear and not subject to interpretation. However, it is not a risk-based approach and therefore can seem in some situations onerous; for instance, there could be limited risk of contribution to external fire spread where combustible materials are adequately protected against the effect of a fire.

Nevertheless, this does not currently apply to:

- Blocks of flats less than 18 m in height where the evacuation of the residents can be complicated as residential buildings are traditionally designed so that only the apartment of fire origin evacuates. Whether this height is an acceptable trigger point should be assessed as part of the review. However, this has also a significant impact on other parts of Approved Document B which are being looked at by other parties. Coordination will be therefore required.
- The furniture and storage provided by balcony users, which can vary significantly from one balcony to another.

A/B-14.4 Overall contribution to external fire spread

Currently no standard in the UK gives guidance on how to estimate, via a test, the contribution of balconies on external fire spread. The full-scale test for external fire spread in the UK is through BS 8414-2:2020 which does not include balconies as part of the test configuration. Therefore, the only tests currently carried out are ad-hoc tests.

The different parties interviewed as part of this research felt confident that the amendment to the Buildings Regulation have a beneficial impact on restricting external fire spread and have begun to incorporate these changes in buildings less than 18 m. As seen previously, solutions have been found for the majority of the balcony components to fulfil these new requirements. The main concerned expressed during the interviews was related to the area between the balcony deck and the compartment floor; i.e. where cavity barrier and fire stopping is provided. However, limited research has been carried out to date to assess the impact of these restrictions in terms of external fire spread and it is too early to use past fires to conclude whether these changes have had a positive impact.

A/B-15. Conclusion

The first phases of this research project have provided a better understanding on balcony role, design and uses. The fire safety challenges associated with these elements have been reviewed as well as the fire safety guidance available in the UK to control these risks.

Several points have been highlighted which merit further discussion:

- **The definition of balconies** from a fire perspective. The consortium suggests the use of the definition given in BS 8579:2020; i.e.

  > "3.2 Balcony: *Accessible external amenity platform above ground level exterior to and with direct access from a building*"

  along with the associated notes to the clause be adopted more widely such as in ADB and in other guidance.

  From this review, it is also suggested to omit Juliet guarding (other than where laminated glass is used, which is considered in Part C) as the impacts on external fire spread associated with these elements are different from balconies with a projecting floor. Indeed, from a fire safety perspective, a balcony creates a vertical obstruction on the building façade which will affect vertical fire spread while Juliet guarding does not.

  The difference between an open balcony and an enclosed one is also to be explored. Current guidance suggests that a balcony with over 50% openings should be considered as open. However, the origin of this value remains unknown. The enclosure of the balcony can vary significantly from one balcony to another (e.g. recessed vs. projecting balcony, railed vs solid balustrade, addition of screens to protect against wind, sun, etc.). Defining from which point a balcony should be considered as open is key as the fire safety measures applicable are different, BS 9991 suggesting that an enclosed balcony should be treated as a room.

- **The contribution of the different balcony components** on external fire spread has been highlighted many times by real fires. The amended Building Regulations have addressed this point in new residential buildings over 18 m in height by only allowing materials achieving at least Euroclass A2-s1, d0 to be used in balconies. The industry has confirmed during the different interviews that solutions have now been found for the majority of elements. However,
  - Some areas of uncertainty remain in relation to the use of laminated glass (refer to Part C) and insulation, especially for terraces, and membranes that should be Euroclass B-s1, d0 in external walls according to ADB. However, their classification, when used as part of a balcony, remains unclear.
  - These restrictions may be challenging in the future with the increasing use of bio-sourced elements. The project should therefore look at whether some level of flexibility could be reintroduced and how this can be controlled.

    - The absence of restrictions in buildings less than 18 m in height should also be looked at; however, this is not only related to balconies but also to the overall external envelope build-up.
    - Whether these restrictions on their own are sufficient to restrict fire spread is also to be assessed.
- **Controlling fire load** on private balconies is a challenge; some level of restrictions on their content will always be required. However, from a fire safety perspective, should the designer always assume that a fire will start on a balcony and design this space accordingly? This includes provisions for limiting upward fire spread but also downward and lateral, especially where balconies are adjoining to each other or stack on top of each other. In addition, the use of common balconies as a social space should also be explored as it can result with the provision of fire load in a space that is meant to remain fire sterile.
- **The performance of open balconies designed as means of escape in the event of a fire** should also be assessed to ensure that residents can evacuate, and fire-fighters can carry out their rescue and fire-fighting operations. The main parameters to be looked at are:
    - The conditions resulting from smoke spread (visibility, temperatures, etc.),
    - The level of thermal radiation received by residents escaping by the apartment of fire origin, and
    - The fire resistance of the balcony itself to ensure that it does not collapse.
- **The design and construction of balconies** are complex, vary from one building (or even balcony) to another and keep changing as new technologies appears on the market. Ensuring that the guidance document covers every single application is therefore a challenge. One of the main issues highlighted during interviews is the provision of fire stopping for cantilever balconies at slab level between the compartment floor and the balcony deck in a zone that is usually congested due to the different fixings going through (balcony support, cladding support, etc.). However, these challenges also occur where balconies are not provided and therefore should be looked at when assessing the provision of ADB for the wider external envelop.
- **Fire test standards specific to balconies** are limited and tend to consider what appears to be an onerous fire scenario. Further research should be done on that topic to assess whether this could be improved.

While all these points tend to be negative, it has also been highlighted by past fires and research that a balcony can have a beneficial impact on limiting fire spread if designed for that purpose by acting as a horizontal barrier. While this benefit is not recognised in the UK guidance, several countries use this principle by requiring vertical and/or horizontal projection of varying height/depth at compartment floor level to be fire rated. The review of past fires (Section A/B-11) has shown several examples where the fire was contained on the balcony of fire origin where the balcony above was made of concrete and not clad with combustible materials. Given that controlling the use of balconies in residential buildings is

challenging, providing fire rated horizontal separation (balcony soffit, deck, etc.) could be a way to address the risk of external fire spread resulting from a balcony fire. This would be especially beneficial where balconies are stacked on top of each other.

Part B : Spandrels

A/B-16. Summary

This section addresses the ‘spandrel’. The historical origins and contemporary usage of the term have been analysed. The performance function of elements of construction known as the ‘spandrel’ have been analysed in the context of Approved Document B (ADB), along with other international regulatory approaches.

It is concluded that the use of the term spandrel pertains to opaque elements of construction on the perimeter of a building at (and around) the junction of a building’s perimeter structure and floor.

The fire safety function of the spandrel, as embodied by current English guidance, can be linked to the introduction of a delay to fire spread between storeys. Notably, guidance to the building regulations (and regulatory approaches around the world) do not attempt to guarantee that storey-to-storey fire spread should not occur or to quantify the extent to which it is likely to be delayed.

This approach represents a choice to prioritise other aspects of building function (e.g. the possibility of having windows on adjacent floors) over the prevention of external fire spread.

The measures described in ADB are, in principle, consistent with allowing storey-to-storey fire spread to occur. The evacuation principle is predicated on the assumption that this spread happens relatively slowly, such that occupants of upper stories are able to egress away from the spreading fire. Thus, the measures described in ADB appear to be an attempt to delay fire spread in order to support safe egress. The rate of fire spread which is deemed to be acceptable for a stay put evacuation strategy, where occupants are able to remain in their apartments (or to allow occupants to escape should they choose to do so) is not explicitly addressed.

Absent from the guidance and, apparently, from any of the supporting research is a quantitative assessment of the various parameters of interest. There is no definition of *adequacy* in relation to the association between the delay of fire spread and evacuation strategy. There is, therefore, no criterion against which to evaluate whether a proposed external wall assembly delivers an adequate (or inadequate) delay.

A ‘magic number’ of 15 minutes is frequently cited within the literature as a relatively low rate of fire spread. However, the literature makes no quantitative assessment of whether a) this value is appropriate, or b) what conditions are expected to be maintained in upper stories before this time is exceeded.

Within the available literature no direct link is made between a 15-minute delay time and the time required for fire-fighting operations to be initiated. Similarly, no consideration is given within the literature to the impact of the spread of a fire on the operation of the fire and rescue services or other fire suppression measures that might be necessary to tackle fires spreading to more than one storey.

While the fire safety measures defined in ADB should logically be consistent with, for example, a ‘stay put’ strategy, this logic is based on a series of assumptions that have been given no quantitative basis within the literature, and hence there are no means by which they can be verified on a case-by-case, or system-by-system, basis.

The absence of quantitative performance criteria for storey-to-storey fire spread, and the absence of any means by which to verify ‘adequacy’ for a given construction system, represents a ‘blind spot’ in relation to any attempt to meet the functional requirements of the Building Regulations.

It is recommended that to fill this ‘blind spot’ a significant experimental programme should be undertaken to investigate the performance that may currently be delivered by the key typologies of construction. This will allow the ‘delay period’ associated with commonly used forms of external wall construction to be quantified in terms of relevant performance metrics (e.g. tenability criteria).

The acceptance criteria for ‘adequate’ delay of storey-to-storey fire spread are closely bound to a building’s overall fire strategy (e.g. detection, horizontal egress, vertical egress, and fire-fighting). Thus, it is not proposed to define the thresholds that constitute acceptable performance since these are likely to vary on a case-by-case basis. This will allow stakeholders (in conjunction with other research currently being undertaken by MHCLG) to form evidence-based opinions on: a) whether the performance of common typologies of construction can be considered adequate; and b) the definition of any counter measures necessary to adequately mitigate the hazards to either occupants or the fire and rescue services.

A/B-17. What is a spandrel?

The purpose of this section is to explore the brief in relation to spandrels and the role that these can or should play in delivering the overall fire safety strategy for a building. In addressing this topic, the definition of 'spandrel' is immediately relevant.

Without defining what is meant by 'spandrel' it is not possible to define the performance expectations for such an element of construction.

The first question to be addressed by this research, therefore is 'what is a spandrel'? Once this is established, it will be possible to more clearly establish the hazards a spandrel (or the absence thereof) may introduce or mitigate in a building, and the role(s) that the spandrel may play as part of a building's fire safety strategy.

An exploration of the term 'spandrel' has been conducted in terms of its meaning in relation to: specific elements of construction, or parts of a buildings (Section A/B-17); and to the function that these elements are expected perform in as part of a building's fire safety strategy (Section A/B-19).

To address this question, a review was conducted of:

- Historical uses of the word 'spandrel',
- Architectural literature, and
- Fire safety engineering literature.

In addition, a series of interviews were conducted with construction professionals who volunteered their time to assist with the research.

A/B-17.1 Historical uses

The Oxford English Dictionary (*spandrel, n., OED Online,* 2020) traces the use of the word spandrel to 1477. However, the earliest use that is cited in relation to what might be considered a modern engineering or architectural application, is in the construction of the original Westminster Bridge in 1739. The arches of the bridge were masonry, and in his account of the construction of the bridge, Charles Labelye noted that "*As to the Fronts of the Spandrels of the Arches, they are filled with good and regular Purbeck Stones*". The Oxford English Dictionary gives the following definition:

> *"The triangular space between the outer curve of an arch and the rectangle formed by the mouldings enclosing it, frequently filled in with ornamental work; any similar space between an arch and a straight- sided figure bounding it; also, the space included between the shoulders of two contiguous arches and the moulding or string-course above them."*

An illustration of this (for the original Westminster Bridge) is given in Figure A/B-22.

In the context of modern building design that does not contain arches, the definition is not particularly illuminating – however, by the turn of the 20th century the word spandrel was commonly recognised in a very different context.

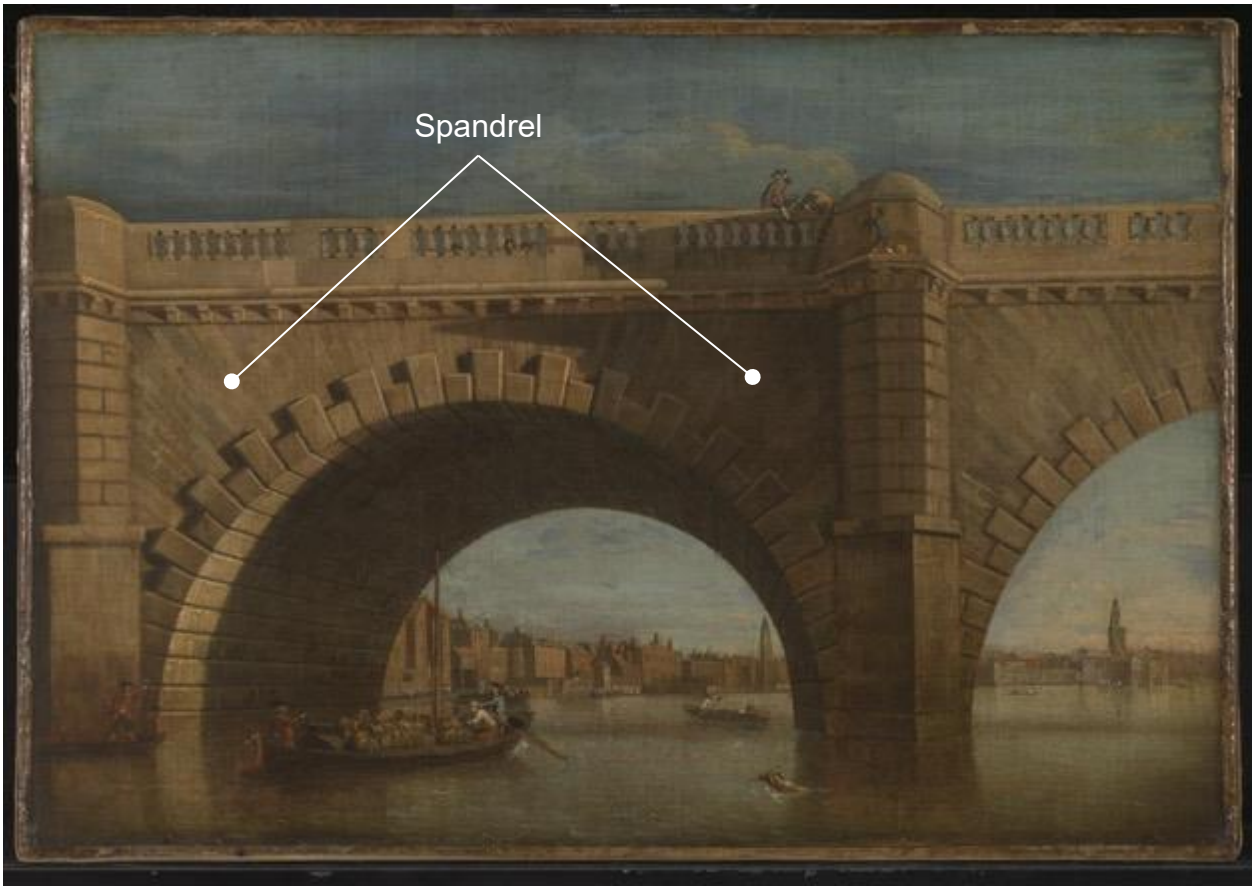

Figure A/B-22 An arch of Old Westminster Bridge, c. 1750, Samuel Scott, CC-BY-NC-ND 3.0, www.tate.org.uk/art/artworks/scott-an-arch-of-old-westminster-bridge-t01193

A/B-17.2 Changing meaning

The emergence of the skeletal steel frame for multi-storey building construction at the end of the 1900s caused significant changes in the way that buildings were constructed. Previously, the external wall of the building had typically been required to be loadbearing – thus, for large buildings external masonry walls were required. Windows could be formed within the walls but were, necessarily, comparatively small – with masonry arches a key loadbearing mechanism for making larger openings was required. However, the use of steel allowed much more flexibility within the external envelopes of buildings. The external wall no longer needed to be loadbearing, but had instead become a 'blank canvas' (Scott Murray, 2009a). How designers chose to fill this canvas varied considerably.

However, initially, there appears to have been considerable conservatism amongst designers. Many opted simply to fill the external wall with masonry, thereby concealing the nature of the buildings' structures; "*masonry to the eye, but steel or reinforced concrete to the mind*" (Scott Murray, 2009b). Designers "*did their best to make it look respectable by concealing all signs of the frame with external masonry that looked massive enough to carry the building"* (Bowley, 1966a). Thus, many of the features that might more commonly

be associated with masonry buildings were transposed onto this new form of construction, largely for aesthetic or perceptual reasons. The terminology from traditional construction also transposed onto this new building technology.

By the turn of the 1900s, the term spandrel was used to relate to "*Those portions of the exterior walls, either on the street fronts or interior courts, which lie between the* [columns] *and between the window-spaces of successive storie"* (Freitag, 1906). Thus, the meaning of *filling* associated with the historical definition was retained, but now the spandrel took a broader definition.

Although the late 19th century and early 20th century continued to see typical conservatism with regard to the appearance of the external envelope, some designers (and clients) opted for more radical design solutions. Rather than aiming for 'masonry to the eye', the external wall was filled with lightweight frames of glass, terra cotta, and other (then) unusual construction materials. One of the earliest and most frequently cited examples of this construction type is the 1895 Reliance Building in Chicago – where two of the four walls were brick infill, while the other two were plate glass with terra-cotta tile ornamentation (Merwood, 2001). The columns were concealed within the window frames. This terra-cotta tile arrangement, and its interface with the structural frame, was referred to as a spandrel.

Writing in 1906, Joseph Freitag recognised that the detail of these spandrels could "*vary greatly, depending largely on the architectural effect contemplated by the designer in his* [sic] *arrangement of the material*" (Freitag, 1906). He determined that a "*general description of spandrels can hardly be given as applicable to general practice*" – and instead provided a series of examples of the various methods employed (e.g. Figure A/B-23).

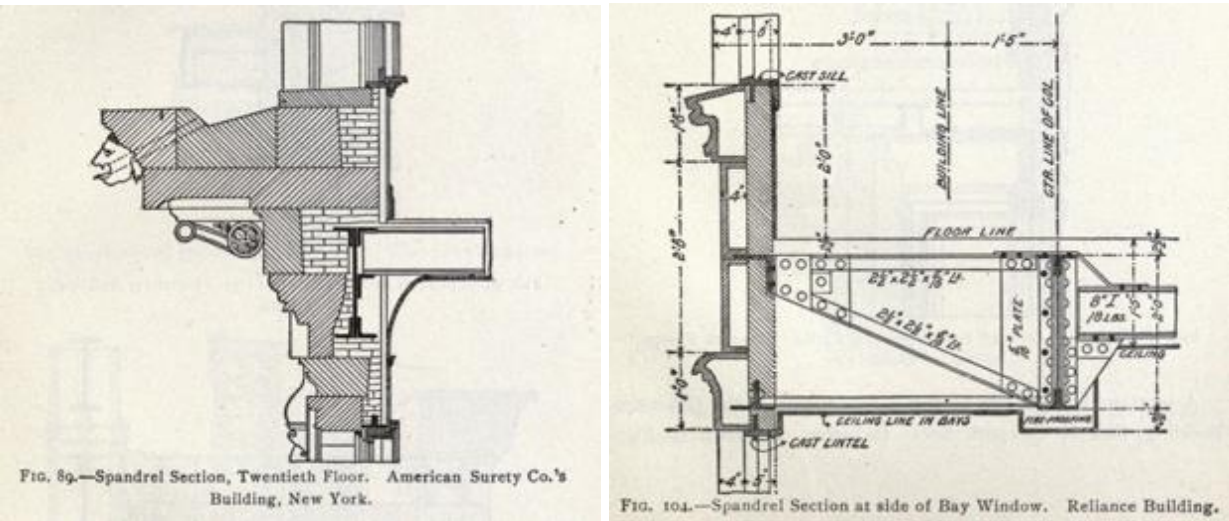

Figure A/B-23 Extracts from Freitag, (a) Spandrel at American Surety Company Building; and (b) spandrel at the Reliance Building (Freitag, 1906)

Thus, by the start of the 20th century the meaning of the term 'spandrel' had grown to encompass a wide range of construction elements and design methodologies. At its most general, the spandrel was filling space between openings – but it also encompassed the various details that were required to support those fillings.

During the 20th century, the term spandrel continued to embody this broad definition. However, while the presence of a 'filling' on the external wall was desirable for those who wanted their buildings to be 'masonry to the eye' – many designers sought a new aesthetic that required the elimination of the filling, and the extensive use of glass in the external wall (see Part C for further discussion regarding the use of glass in architecture). Similarly, there was a commercial drive to substitute the masonry for thinner, lighter, more thermally insulative materials (Freitag, 1906; Bowley, 1966b). This new approach to construction led to a new class of cladding systems that became known as 'curtain walls', in that they enveloped the entire building (rather than being constructed between the floor-slabs).

However, fire regulations constrained the degree to which lightweight curtain walls could be applied. In the USA, for example, up until the 1950s various city building codes had required that the external wall of the building should be 'fire resisting' (Davison, 1950). Some building codes specified a thickness of 'solid masonry' – for example, in New York a thickness of 8 inches (203 mm) of masonry was required below windows on the external wall as a fire safety precaution. This requirement meant that many of the potential advantages of the curtain wall were negated. There was no longer a significant weight saving; the minimum defined thickness reduced any potential gains in lettable area; and the thermal properties of brick were not as advantageous as other insulation materials (Davison, 1950).

In many cities, canny architects circumvented the code requirements for providing brick 'back-up' walls between windows by providing a fully-glazed façades. Since windows were permitted by building codes, and there was no restriction to their dimensions, a wall could be fully glazed without the need to provide a fire resisting masonry wall between openings on different levels. This was a decisive factor (Davison, 1950) in the decision to build the UN Secretariat in New York with a fully glazed envelope on its east and west faces – "*the world's largest window*" (Murray, 2009).

A similar story unfolded in the UK, with the details and aesthetics of curtain walls being heavily influenced by the local fire regulations. An example cited by Yeomans (Yeomans, 1998) is the difference between Edinburgh and Hendon (London). In 1937, TP Marwick and Son's built a glass curtain wall in Edinburgh without any fire stopping or spandrels. Conversely, the Daily Express Building on London's Fleet Street in 1933 had originally been planned to have full height transparent glazing on the external wall – but in the final design, pumice concrete was added to introduce a fire resisting spandrel panel.

It is important to note that it is in this period (1930s) that the fire resisting spandrel panel first appears within the UK. This combines the geometrical characteristics of an architectural spandrel with the fire safety concept of 'fire resistance' which was only formalised in 1932 (Law and Bisby, 2020).

However, by the late 1950s, the building envelope systems that had been pioneered in the early 20th century were becoming increasingly favoured as a form of construction (Yeomans, 2001). It was noted that legislation based on the idea of solid external 'walls', with window 'openings' had been rendered obsolete by these new cladding technologies

(Rostron, 1960). With the introduction of national building regulations in the early 1960s the requirements for a fire resisting spandrel were removed.

In 1971, The Architects' Journal released a Handbook of Building Enclosures which was an attempt to encourage designers "*to think in a more disciplined way about the functions of the building fabric*" – in an effort to improve public satisfaction with the performance of the external wall ("Technical study, Enclosure 1: Functions of building enclosure: 1 Introduction," 1971). At this time, the classifications for the external envelope of the building were presented as follows: masonry, concrete, facings and renderings, panels, curtain walling, sheet cladding and windows. The term spandrel was retained and used to refer to specific elements of construction. For example, in the case of curtain wall construction, the 'spandrel panel' was a reference to products that could be inserted into a pre-existing frame below a window (Figure A/B-24a). At around this time, the term 'spandrel beam' was also used to refer to perimeter beams within a building that formed part of the external wall (Figure A/B-24b).

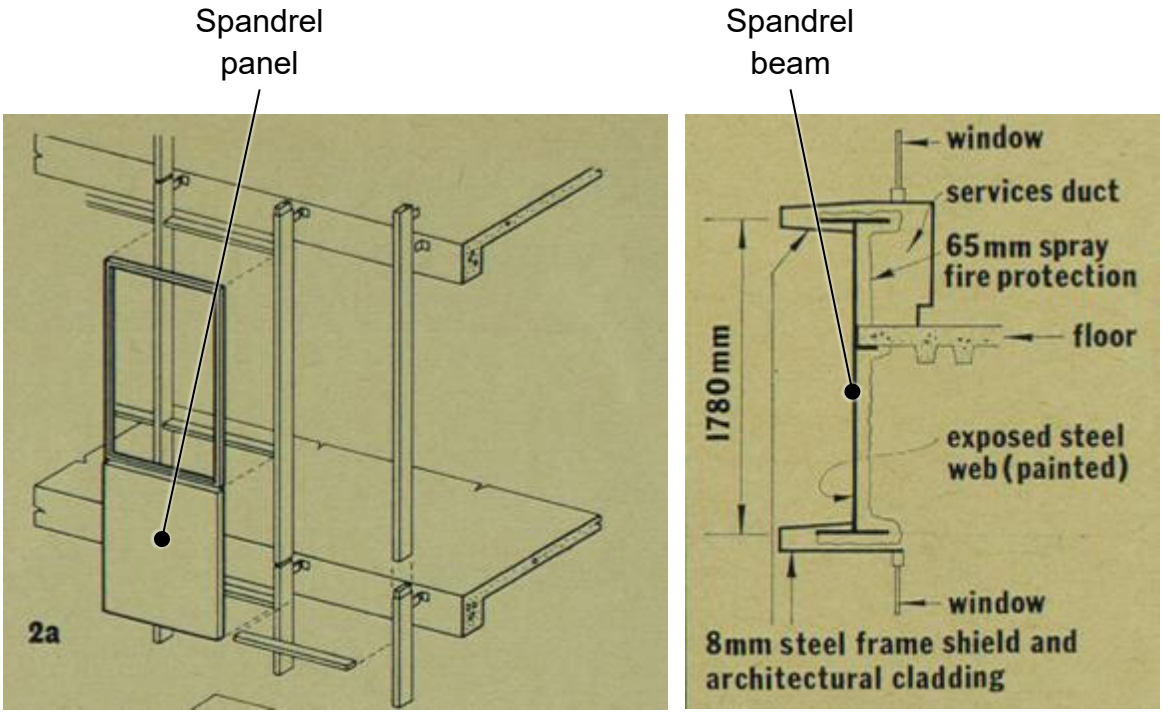

Figure A/B-24 (a) Spandrel panel in a curtain wall; (b) Spandrel beam at slab edge taken from (Information sheet, External walls 5: Curtain walling: 1 Introduction, 1971) and ("New methods of fire protection for external steelwork: Introduction," 1974) respectively.

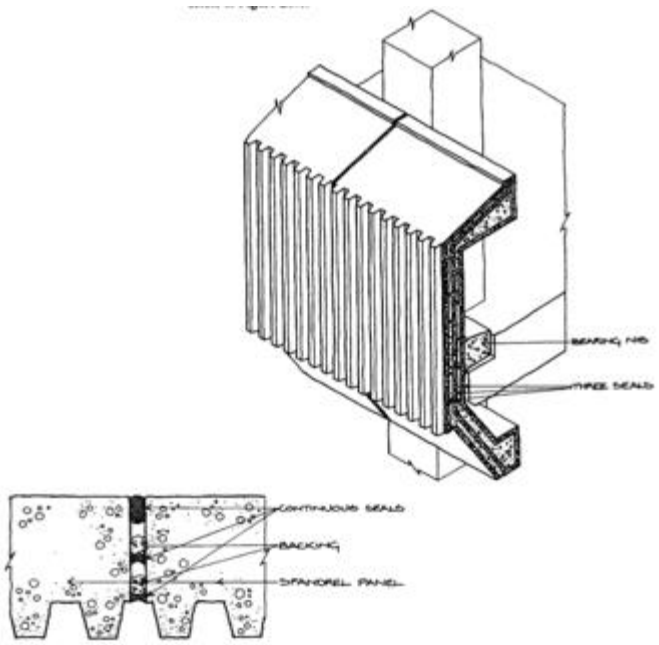

Figure E1.6 Typical spandrel panel vertical joint showing seals (above) and plan of spandrel panel joint showing seals

Figure A/B- 25 Spandrel panel in a precast concrete wall (Special Publication 87, Wall Technology Volume E, Large Heavy Units on Framed Buildings and in-situ Concrete, 1992)

Over the course of 1970s-1990s, the word spandrel was used in a variety of contexts. It was variously used to refer to precast concrete elements (*Special Publication 87, Wall Technology Volume E, Large Heavy Units on Framed Buildings and in-situ Concrete*, 1992), external elements of construction that concealed other structure elements (Hannay, 1989), and opaque glazing elements ("Volitisation and the Curtain Wall," 1985). In 1992, the Department for the Environment commissioned a voluminous report from the Construction Industry Research and Information Association on Wall Technologies (*Special Publication 87, Wall Technology, Volumes A-G*, 1993). The resulting report sought to address a problem of lack of suitable guidance in the field of wall technology – however, no single definition for the spandrel was provided.

In summary, at the end of the 20th century the term spandrel was used to refer to a wide range of building elements. In addition to its historical meaning (i.e. in relation to the arch), the term spandrel was used to describe:

- The solid construction that filled the gap between windows on adjacent floors;
- Beams that served the above purposed,
- Individual panels inserted within a curtain wall immediately below a window element, and
- A range of different elements of construction that were located on the external wall adjacent to the slab edge.

It is important to note that by the end of the 20th century the term spandrel was not linked to the definition of specific properties nor was the term linked to the any functions in regard to the fire safety strategy.

A/B-17.3 Contemporary usage

The Oxford Dictionary of Architecture (Curl and Wilson, 2015) gives multiple definitions for the term spandrel. Of particular relevance, given the above discussion, are the following:

> *"Spandrel - In a framed structure the panel between the cill of a window and the top of the window below"*

and

> *"Spandrel-panel – part of a wall between the head of a window-aperture and the cill of the window above in a building of two or more storeys, especially in a curtain wall."*

The British version of the European standard for curtain walling terminology BS EN 13119:2016 'Curtain walling — Terminology' defines the 'spandrel area' as the

> *"area of a curtain walling between two horizontal zones, normally between glazing and concealing the edge of the floor slab"*

It also provides a definition for 'spandrel panel' as a 'panel within the spandrel area'.

Following the Grenfell Tower fire, MHCLG issued guidance (Advice Note 14 (*Advice Note 14, Advice for building owners on external wall systems that do not incorporate Aluminium Composite Material*, 2018)) in relation to the presence of combustible material in the external wall. This advice stated that:

> *"Spandrel panels (including window and infill panels) are also part of the external wall of the building and should be checked."*

Further advice (Advice Note 19 (*Advice note 19, Advice for owners of buildings which include spandrel panels/window panels/infill panels*, 2018)) was framed in relation to a description of a 'spandrel panel' as follows:

> *"Spandrel panels can be provided for both aesthetic and functional purposes. Like the rest of the external wall, the panels are generally required to meet acoustic, thermal, moisture, and fire performance requirements. Such panels are not normally load bearing but are often designed to account for wind loading.*
>
> *The design and materials of panels varies between buildings; some are made of singular components such as cement particle board, other panels are composite products comprising outer facing materials bonded to an inner core.*
>
> *It is important that building owners check the materials used in the panels to ensure that they do not present a risk of fire spread over the wall. It may not be readily apparent what materials are present, particularly for composite products which can include inner combustible insulating cores."*

The descriptions of a spandrel panel contained within this advice are consistent with the usage of the terminology that had evolved of the previous decades. However, the advice describes what a spandrel panel can be, rather than providing an all-encompassing definition of what a spandrel *is* or its intended function fire safety function (if any).

As such, the use of the term ‘infill panel’ in the MHCLG Advice Notes is indicative of the flexibility with which language is used to refer to different parts of the external wall construction.

As part of this research project, the authors conducted a series of interviews and discussions with practitioners in order to gather evidence about contemporary practices. During these interviews a range of definitions for the spandrel emerged.

There was consensus that the effect of a spandrel was to create an apparently opaque element of construction on the external wall of the building in the location of the slab edge. The means by which this opacity was achieved could be due to the use of opaque materials throughout, or due by using glazing with a coating applied to the inner surface.

There was also consensus that the spandrel was located at slab level in order to conceal the slab, and any services associated with the raised floor and/or suspended ceiling. However, there was less consensus about the limits of the spandrel. Some suggested that a spandrel could be full storey height, while others suggested that it was strictly limited to the region around the floor slab.

Similarly, the term ‘infill panel’ is used widely within the industry. An infill panel is generally considered to be any opaque panel that fills a void in the external wall. Infill panels may therefore be used to form a spandrel. However, the usage of the term infill panel is significantly more widespread than relating to the spandrel region. There is therefore some ambiguity within the terminology used within industry about the distinction between a spandrel and infill panel. This is partly due to the fact that the same product (an infill panel) may be used to form elements of construction that might be also called a spandrel. Figure A/B-26 shows how infill panels may be used on an external wall in the location of a spandrel (i.e. slab edge) and also elsewhere in order to fill voids in the external wall. It should be noted that there are some products that are specifically intended to be used in the location of the spandrel (e.g. some glass panels with mounted insulation) – but there are many products where their location on the building is not known at the time of manufacture.

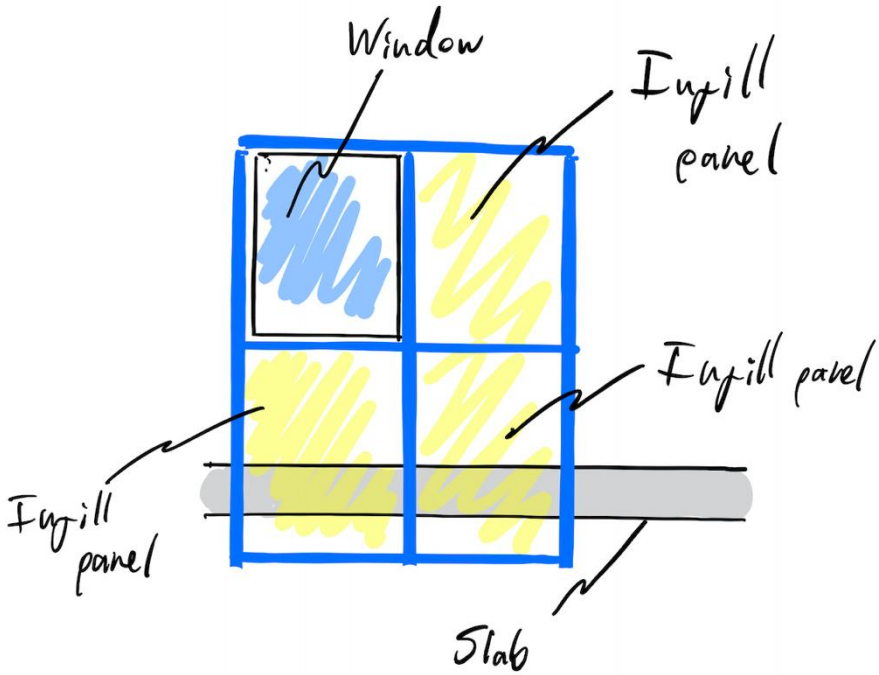

Figure A/B-26 Illustration showing infill panels in the location of the slab edge

A/B-17.4 Notable fire events

It is notable that the term 'spandrel' and 'infill panel' have been used in relation to the building construction in relation to several major fires since the late 1990s. During evidence to the Environment Subcommittee (Environment, Transport and Regional Affairs Committee, 2000) there was discussion of a spandrel being "*that panel below the window which is of non-combustible material*". In a written submission by Stephen Ledbetter of the Centre for Window and Cladding Technology, it was stated that:

> *"Walls may be constructed as single layer curtain walling in which an aluminium (or other material) frame holds infill panels of glass and opaque materials. More commonly, a wall may be constructed as a layered construction. In these walls a metal frame contains infill panels and acts as the structural part of the wall. It also serves to seal the building against air leakage and frequently provides the thermal insulation of the wall. An outer layer then serves to shed water from the wall and provide the aesthetic of the facade."*

Similarly, the Fire Brigade's Union suggested that for buildings up to 25 m high, "*any infill panels should afford the same fire resistance as the walls that surround them*". In relation to the fire at Lakanal House during the Inquest, the term 'infill panel' was repeatably used to refer to the opaque construction immediately below the window. It is notable, though, that trade journal coverage, e.g. (Knutt, 2013), the term 'spandrel' was used to refer to this part of the construction.

This evidence suggests that the term 'infill panel' is frequently used to refer to elements of construction that could also (and had been in previous decades) referred to as a spandrel panel.

A/B-18. Role of the spandrel zone

The previous section has demonstrated that the term ‘spandrel’ has had a long and varied history. However other than the role of ‘filling’, the function of the spandrel in terms of building performance has not been presented in any great detail. Thus, this report will use the term ‘spandrel zone’ to look at functionality and performance, in such a manner that the functions and performance required of the ‘spandrel zone; defines the nature of the ‘spandrel’. The focus of this section, given the scope of this project, will be the functionality and performance in relation to fire – however, it should be noted that there are many other functions that the spandrel zone of a building may be required to perform.

A/B-18.1 Codification

Prior to the development of the skeletal frame, the presence of fire resisting construction on the external wall of the building was virtually assured though the use of brick or stone as a construction material. However, with the emergence of the skeletal frame and the curtain wall – the presence of fire resisting construction on the external wall became much less assured.

The fire resisting spandrel wall was a fire safety precaution that appears to have originated in North America. The fire resisting spandrel wall was located between windows on adjacent storeys. Its presence was an attempt to mitigate the potential for storey-to-storey fire spread via the building’s windows.

The approach towards mitigating the potential for storey-to-storey fire spread was expressed as the required vertical dimension of the fire resisting spandrel. This dimension and its fire resistance requirements appear simultaneously. The origin of the specific measures (often a three-foot-high wall with a specific fire resistance requirement) is unknown to the authors and is not the subject of this research.

In the UK, the fire resisting spandrel wall appears to have been present in some local building laws in the early 20th century (Yeomans, 1998). At a national level, the hazard of storey-to-storey fire spread was addressed by the Fire Gradings Committee in 1946. They noted that “*if the storeys of a building are separated at all points from one another by fire resisting construction of a sufficient grade to resist a complete burn-out, there still remains risk of spread of fire between storeys via windows*” (“Paragraph 212, Fire Grading of Buildings, Part I,” 1946).

The Fire Grading Committee concluded that “*a reasonable degree of protection could be obtained by providing at least 3 ft. of construction (of which at least 2 ft. should be above floor level) of the same grade of fire resistance as the walls, between the lintel of the lower window and cill of the one above*” (“Paragraph 212, Fire Grading of Buildings, Part I,” 1946). They felt that “*it would be onerous to demand [protected windows] in all cases*”. This conclusion was subsequently enacted in regulations. In the early 1950s, a series of

‘Bylaws’ were published in England by the Ministry of Communities and Local Government (*Modal byelaws; Series IV; Buildings*, 1952), in Scotland by the Department of Health (Langdon-Thomas and Law, 1966), and in London by the London County Council (*London Building (Constructional) By-Laws*, 1952). Each of these introduced a fire resisting spandrel wall.

The English ‘model’ bylaws recommended that the spandrel should be a minimum of 3 ft (914 mm) high; the Scottish bylaws required that the spandrel should be a minimum of 3 ft high; and the London bylaws required that the spandrel should be a minimum of 2 ft 6 in (762 mm) high. Legislation made a clear distinction between external ‘walls’ which were intended to confine fire within the building until it burnt itself out, and limiting ‘openings’ in order to prevent spread of the fire (Rostron, 1960). However, just at the time when the UK was introducing the spandrel into model building codes, in the USA, there was considerable pressure to remove such requirements.

A/B-18.2 De-codification

As external wall technology developed in the post-war USA, there was pressure from architects to remove the constraint of a fire resisting spandrel panel. The drivers for this were primarily economic (Freitag, 1906; Bowley, 1966b) and partly aesthetic. The aesthetic drive was partly aspirational (i.e. architects simply wanted more glazing), but it was given additional impetus by the precedent set by some major projects. For example, the UN buildings *did* require an external wall to have a fire resisting spandrel – but the architect was able to circumvent the regulations. The form of this building (and other such buildings as described in reference (“Trends in Wall Design,” 1971)) then became a template for other designers to imitate in other jurisdictions. It has been observed that during the 1940s and 1950s “*codes throughout North America prevented the full flourishing of the glass wall*” (Leslie et al., 2018)

Writing in the Architectural Forum in 1950, Robert Davison spelt out what he perceived as a “*basic building-code inconsistency*”. Davison ridiculed the situation in which the need for fire protection of the external wall stopped “*quite magically*” at the window jam – the “*fire raging furiously below*” and apparently “*non-existent above*”. He asserted that the principal forces that the curtain wall was called upon to resist were the “*legal powers wielded by building commissioners*” and that the development of the external envelope had been “*delayed for half a century*” due to the restrictions of municipal building codes (Fitch, 1955). He reported that many jurisdictions had recently rescinded the requirement for masonry walls – switching instead to a ‘performance based’ approach. This change triggered many material producers to commence research work to produce curtain wall systems “*capable of meeting the new code requirements*” – and “*almost as important, the Herculean task of convincing city building officials*” that the code requirements had been met.

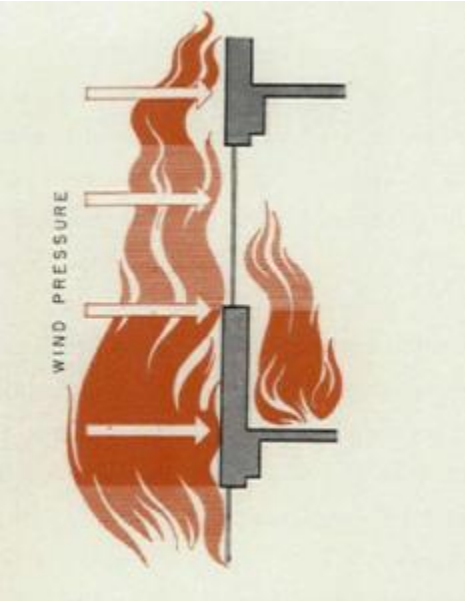

(a)

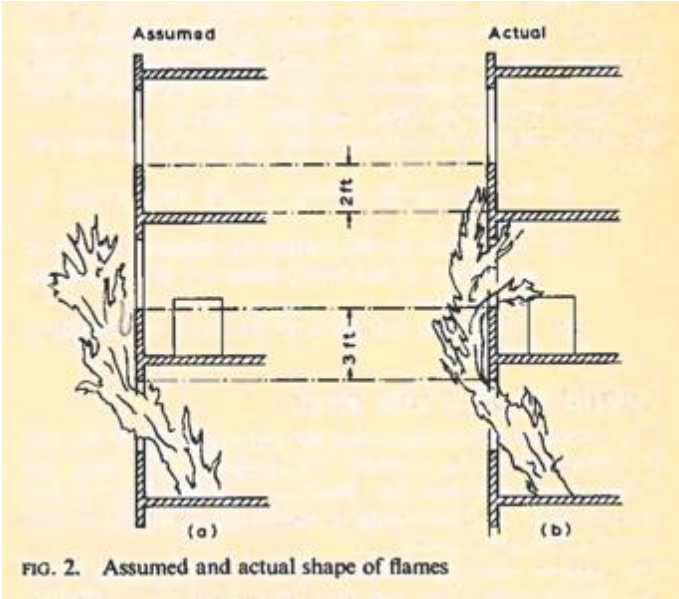

(b)

Figure A/B-27 Extract from (a) The Architectural Forum ridiculing the logic of the fire resisting spandrel; and (b) from Fire Research Note 8 showing the 'assumed' and 'actual' effect of the fire resisting spandrel wall, taken from (Fitch, 1955) and (Langdon-Thomas and Law, 1966) respectively

Similar concerns were expressed in the UK in the latter half of the 1950s. In the late 1950s, the UK government's Joint Fire Research Organization began a research project into the use of spandrel panels (Ashton and Malhotra, 1960). The motivation for the research was very clear, it was intended to determine whether "*relaxations could be justified*" from spandrel wall requirements in the UK's building regulations (Ashton and Malhotra, 1960). It was acknowledged that the present requirements were "*restrictive in the use of some forms of construction which were desirable for other reasons*" (Ashton and Malhotra, 1960). The researchers (Ashton and Malhotra) highlight that there were differences in the view on the magnitude of the hazard presented by window-to-window fire spread; they therefore undertook a large-scale experimental study to investigate the effectiveness of the spandrel panel.

Based on their work, Ashton and Malhotra found that even *with* a spandrel wall the glazing on the floor above a fire could break, and that this could result in fire spread to the upper storey. Based on these observations, they concluded that a 3 ft (914 mm) spandrel wall was an 'inadequate' measure to prevent the spread of fire from storey-to-storey (Ashton and Malhotra, 1960). They suggested therefore that the fire resistance requirement for a spandrel panel could be reduced "*even below a half hour without any significant reduction in fire safety to a building or its occupants*" (Ashton and Malhotra, 1960).

Ashton and Malhotra reasoned that if the current mitigations for storey-to-storey fire spread were not effective, then they might as well be omitted from the regulatory requirements. Writing in the architect's journal in 1964 Ashton and Malhotra again presented their research (Ashton and Malhotra, 1964). They concluded that the results showed that "*a light alloy could be designed to achieve in its own right the standard of fire protection specified in local authority bylaws*". They also recognised that detailing of the curtain walling system

was important – they identified essential features as being "*separate anchoring of the cladding panels to the building and sealing of gaps between the edge of the floor slab and the cladding panels by a method capable of surviving exposure to fire*". The recommendations of Ashton and Malhotra's work were implemented in the new national buildings regulations that were implemented first in Scotland in 1963 (*Building Standards (Scotland) Regulations 1963*, n.d.), and subsequently in England ("The Building Regulations 1965," n.d.). The English regulation is shown in Figure A/B-28 – this text makes reference to Schedule 9 in which table (based on the Margaret Law method of enclosing rectangles) is presented.

E7.—(1) Any side of a building (other than a small garage which is a separate building and complies with the relevant requirements of regulation E16) shall comply with any relevant requirements relating to the permitted limits of unprotected areas specified in Schedule 9 unless the building is so situated that such side might in accordance with Schedule 9 consist entirely of an unprotected area.

Figure A/B-28 Extract from the Building Regulations 1965

To provide context for these new regulations, the then Director of the Fire Research Station (G. J. Langdon Thomas) wrote 'Fire Note 8' with Margaret Law (who's work on building to building fire spread was also included) (Langdon-Thomas and Law, 1966). This note followed the same logic as Ashton and Malhotra. They wrote that "*to provide adequate protection it would be necessary virtually to omit all windows from the storey immediately above the one with openings in it*". It is important to note that the term 'adequate' was used to describe three specific functions as presented in Figure A/B-29.

These functions were therefore 'to prevent the spread of fire', to 'confine the fire within the building until it is controlled or has burnt itself out' and to 'prevent the fire from entering from an adjoining building'. Langdon-Thomas and Law also introduced the concept of a performance expectation associated with fire service intervention; they indicated that performance was required "*until* [the fire] *is controlled*" and that confinement was necessary to "*protect firefighters*".

The three main fire functions of the external wall are as follows:

(i) To prevent the spread of fire from storey to storey.
(ii) To confine the fire within the building until it is controlled or has burnt itself out and to protect fire-fighters.
(iii) To prevent the entry of fire from an adjoining building.

Figure A/B-29 Extract from Fire Research Note 8 showing the main functions of the external wall as assumed by Langdon Thomas and Law (Langdon-Thomas and Law, 1966)

There are further two paragraphs in Fire Note 8 (Figure A/B-30a and b) that are instructive in relation to the considerations that were made at this time. First is the finding that ignition of furniture did not occur in the room above a fire for a period of "*as long as*" 15 minutes even when no fire resisting spandrel was provided. It was also concluded that the provision of a fire resisting spandrel would not prevent ignition of combustible materials high in the room. The occurrence of fire spread was therefore concluded to be independent of the 'fire resistance' of the external wall. It was on this basis that Langdon Thomas and Law conclude that the provision of a fire resisting spandrel would result in no difference in performance.

Langdon Thomas and Law also noted that to provide adequate protection it would be necessary to "*omit all windows*" on a storey immediately above an opening (Figure A/B-30(b)).

The investigation showed that ignition of the combustible structure and furniture of a room immediately above a fire would not occur readily under flame attack for as long as 15 min, even when the under-window panels had no fire-resistance. However, the provision of separation between windows in adjacent storeys in accordance with building byelaws would not prevent ignition of flammable materials such as curtains close to the windows of the room above a fire.
The intention of the separation requirements of the byelaws is illustrated in [Fig. 2(a)]. A minimum height of 2 ft above floor level was specified for the under-window panel which was judged sufficient to protect the contents of a room from flame radiation or impingement. In the investigation described the furniture was substantially shielded by the wall, but combustible material at a much greater height, such as a combustible ceiling lining, would have been exposed to a higher risk of ignition. The indications from the tests and from model experiments were that, under suitable conditions, ignition of combustible material in the upper part of the room would be possible [Fig. 2(b)].

(a)

Within the conditions of the experiments it appears that a vertical separation of 3 ft or a horizontal projection of 2 ft between windows in adjacent storeys is inadequate to prevent flames from a fire entering the upper storey unless fire-resisting glazing is used. To provide adequate protection it would be necessary virtually to omit all windows from the storey immediately above the one with openings in it. The indications are that the fire-resistance required of the under-window panel could be substantially reduced even below ½ hour for fire loads representing a one-hour fire severity without any significant reduction in fire safety to a building or its occupants and that no undue hazard would be introduced by using a combustible cladding of solid timber not less than ¾ inch in thickness.

(b)

Figure A/B-30 Extract from Fire Research Note 8 showing (a) ignition will not occur within 15 minutes (b) that the absence of fire resistance will not reduce the fire safety of a building (Langdon-Thomas and Law, 1966)

In summary, they noted that where no fire-resistant panel was present, ignition of furniture in the room above the fire compartment would not occur "*for as long as 15 minutes*". They concluded that "*the enclosure of a building has little to contribute to the reduction of fire spread within a building and that a substantial relaxation could be made in the structural design requirements for external walls*". It is noteworthy that prevention of storey-to-storey fire spread was defined as one of the objectives of the external wall, but that the conclusions of this work shows, for the first time, an acceptance of vertical fire spread. Langton Thomas and Law link this acceptance to a specific definition – the first mention of a 15 minute criterion.

Despite the objectives, caveats and limitations of Fire Note 8, between 1965, and 1983, there were multiple updates to the English building regulations. Each of these updates omitted any requirement for a spandrel panel. With the introduction of the Approved Documents in 1986 (and subsequent amendments), the "*fire resisting spandrel wall*" remained absent.

A/B-18.3 A new status quo

It has been shown that in two decades following the Second World War, there emerged a new consensus about the prevention of storey-to-storey fire spread. ‘Building commissioners’ had initially attempted to prevent vertical fire spread using a fire resisting spandrel wall – however, the new consensus that emerged in the 1950s and 1960s was that this was not possible without an unacceptable compromise in building design; the only means by which storey-to-storey fire spread could be usefully prevented was by the omission of windows on alternate storeys.

However, although there was acceptance of storey-to-storey fire spread there was not an acceptance on unconstrained fire spread. Ashton and Malhotra were particular in their detailing recommendations at the location of the junction between the external wall and the floor slab. Similarly, while they accepted fire spread – the fire that they accepted was not instant. There was a delay associated to fire growth, breakout through the window of the compartment of origin, development of external flaming, break-in through the window above, and subsequent ignition of furnishings in the room above. Ashton and Malhotra, and Langdon Thomas and Law appear to have accepted that a delay of ‘up to 15 minutes’ for these events to occur was considered acceptable.

Conversely, Ashton and Malhotra appear to have been unwilling to accept ‘rapid and extensive’ fire spread on the external face. As part of the same testing programme, they constructed cladding using thin laminated timber and plastics. They found that the plastic cladding ignited within two minutes and ultimately concluded that the use of [non timber] “*combustible materials needs separate consideration, since they could introduce undesirable hazards*”. Langdon Thomas and Law echoed this concern, noting that “*care in the selection of thin laminated timber cladding and other types of combustible material is important as some of them can, if continuous up the face of a building, cause a rapid and extensive spread of fire on the external face*”.

This contrast reveals that it was not the spread of fire that was considered problematic, but rather the rapidity with which the fire could be expected to spread. At the time there does not appear to have been a clear definition for what constituted an acceptable rate of fire spread. However, as will be demonstrated in subsequent sections ‘up to 15 minutes’ defined by Langdon Thomas and Law appears to represent a ‘magic number’ that recurs at different times an in different jurisdictions.

Revisiting this topic in 1986 as part of a wider review, Malhotra noted that due “*to the presence of windows in the external walls vertical fire spread can not be completely eliminated but with fire resisting external walls and control on the spacing of openings its probability can be reduced*”. He suggested that it “*would be desirable for multi-storey buildings to have fire resisting external walls to reduce the hazard of conflagration both in the horizontal and the vertical direction*”. This is notable because, having observed the status quo emerge over the two decades that followed the issue of the 1965 Building Regulations, Malhotra appears to have had some misgivings about the extent to which fire resisting qualities had been removed from the external wall systems.

A/B-18.4 Periodic review

In the UK, the logic has been revisited by government on at least three occasions. In 1990, by the Building Regulations Advisory Committee (BRAC) (Davis, 1990), in 2002 by Bensilum and Crook at the Building Research Establishment (Bensilum, 2001a, 2001b; Crook, 2001), and in 2016 by Holland at the Building Research Establishment (Holland et al., 2016a, 2016b).

In the early 1990s, revisions were made to the Approved Documents. In 1990, Lawrence Davis (a member of the Building Regulations Advisory Committee) noted that "*it does not seem logical to require a high standard of fire separation in walls and floors yet, once outside the building, fire can traverse the external wall and bypass the internal separation*" (Davis, 1990). He noted that "*it would be helpful if more studies were carried out*" but that "*lack of fire reports in sufficient detail based on actual incidents hampers proposals being made*".

In the early 2000s, Bensilum and Crook (BRE) undertook a research project for the Department for Transport, Local Government and the Regions. The topic was storey-to-storey fire spread via windows. It was stated that the objective was "*to examine the issues surrounding the phenomenon of external fire spread via windows, in order to provide comprehensive and up-to-date advice on the scale of the problem, and cost-effective ways of minimising the risks*". This work attempted to collate information from real fires, and from research literature.

In relation to real fires, Bensilum found difficulty in attributing causality to fire spread via the windows in the external wall. For example, Bensilum noted that many of the case studies had been selected because there was "*at least some external spread via the windows, in many cases there were other mechanisms of vertical spread, such as through voids and shafts within the building*" (Bensilum, 2001a).

Similarly, for curtain wall systems Crook noted that fire spread may have been due to spread via the windows, but that these incidents may also involve fire spread that was "*strictly, within the building, due to inadequate, damaged or absent fire-stopping between the floor slabs and the curtain wall*" (Crook, 2001).

Crook constructed a qualitative argument that the number of people 'killed or injured' as a result of storey-to-storey fire spread via the window "*might be expected*" to "*be quite low*". The essence of this qualitative argument was that it would take sufficient time for a fire to spread in through a window that occupants of upper stories would be able to evacuate. This argument was also presented on the basis that the escape route would generally be away from the fire (i.e. away from the window). In 2001, Crook thus concluded that "*the measures currently called upon in England and Wales through ADB are still commensurate with the risk*".

In 2016, Holland et al. (BRE) undertook a research project as part of the Department for Local Government and Communities as part of the 'Investigation of Real Fires' contract. The first part of this work focused primarily on the reaction-to-fire properties of the various construction elements (Holland et al., 2016a). The work identified that there was a 'common

misconception' regarding fire resistance and reaction-to-fire classifications and that fire resistance exposure conditions were "*inappropriate for the exterior of a building*" – and that the reaction-to-fire classifications were to "*limit the rate of fire growth and fire spread*".

In relation to fire spread via windows, Holland et al. noted that "*high-rise flats are homes, and must provide light and ventilation"* in the form of windows which "*may offer a route for fire spread, in either direction in or out of the flat, irrespective of the other materials forming the exterior of the building*". They stated that "*to prevent vertical spread of fire* [via this route] *it would be necessary to ensure that all windows in such buildings were both fire resisting and sealed close*" – and that this "*would almost certainly conflict with the needs of everyday life*".

The second part of Holland et al.'s work describes a testing programme (Holland et al., 2016b). During the testing a BS 8414-type test was adapted such that a glazed unit could be located above the fire source. The location of the glazed unit relative to the fire source was not detailed in the report, however, there was sufficient space for a 880 mm 'spandrel panel' and a concrete lintel to be located between the sill of the window and the fire source.

Three tests were undertaken where the material that was used for the spandrel panel was varied (9 mm thick 'cement fibreboard', 9 mm thick 'structural hardwood plywood' and 8 mm thick 'compressed stone-fibre with an organic binding agent') (Holland et al., 2016b). In each case, the glazing broke. Holland et al. concluded that the failures of the glazing provided "*a potential route for external fire spread from one flat to another regardless of the design of the external façade*" However, Holland et al. also noted that the study was limited in scope as "*single components of a system and not entire systems were assessed*".

This brings us to the present (2020/21) review. It is clear that each previous review of this topic has identified that storey-to-storey fire spread via the windows is a possibility, but that each has concurred with the assessment of previous authors: the measures necessary to prevent vertical fire spread via the windows are likely to be unfeasible to building designers or users.

Each reviewer has accepted the possibility of vertical fire spread through external windows, but over time the emphasis for why this might be acceptable appears to have changed. Initially, Ashton and Malhotra deemed that the fire spread was not *too* fast, and that to attempt any further slowing of the fire would be unfeasible. However, they did not venture an opinion about what the rate of fire spread should be compared against. Davis simply questioned the logic – but did not seek to justify it.

Crook's analysis is more thoughtful as they offered a logic whereby the timescales associated to fire spread through the window were long enough to allow occupants to recognise a hazard and escape. However, Crook also layered additional arguments onto this basic justification. From their review of the literature Crook suggested that the window was often not the location through which fire first spread – citing weakness in other building elements. Similarly, Crook used evidential basis of previous fires to suggest that even if the window was the first location of fire spread, the number of casualties was 'quite low'. Holland et al.'s approach agreed with the outcome of Crook's research but did not capture

the same arguments. Instead, the focus of Holland's work was on the reaction-to-fire properties of the various spandrel elements.

Within the UK, the regulatory approach appears to embody an acceptance of vertical fire spread between stories. However, from this review, the function of the spandrel zone begins to emerge. There is fundamentally one function that the spandrel zone is required to perform in the UK. That is, to delay storey-to-storey fire spread to enable the safety of occupants of an upper floor. The fire safety strategy must therefore be formulated in such a way to achieve this outcome. The means to do this appear to be twofold:

1. Provide a fire barrier within the building to control the rate of fire spread inside the building and limit this to a rate of spread that is acceptable for a specific fire safety strategy; and
2. Limiting the reaction-to-fire properties of the elements of the spandrel zone such that they do not result in a rate of fire ingress on upper storeys, or rate of fire spread up the exterior, that are acceptable for a specific fire safety strategy.

A/B-18.5 Loss Prevention Council review

In addition to the government sponsored reviews, the Loss Prevention Council undertook an investigation into fire spread via glazed curtain walls (Morris and Jackman, 2003). The research investigated the performance of multiple large scale (two storey) glazed curtain wall assemblies. The research was focused on loss prevention (rather than life safety) and found that "*progressive upward spread of fire… from storey to storey* [was] *highly probable*". Writing about the work it was noted that "*no significant advantage was derived by the use of toughened glass in spandrel panels. The fact that spandrels use glazing at all is cited as a weakness in the system and consideration should be given to the use of fire resisting components to inhibit vertical propagation by remaining in place if the glazing fails*". This work, therefore, implicitly aligns with the conclusion reached by Ashton and Malhotra. However, ultimately, the authors noted that "*the destruction observed during experiments reflects what has been experienced in the field with resulting large claims for property damage and business interruption*" and that the "*means are at the specifier's disposal to control loss using passive and active fire protection methods*."

A/B-18.6 International perspectives

The previous sections have shown how the UK approach to the role of the spandrel zone has been for it to play a role of delaying an inevitable fire spread – rather than attempting to prevent it. An international perspective allows the UK approach to be compared against that of other countries. Bensilum (Bensilum, 2001b) undertook this review in 2001, and in 2016 Nilsson (Nilsson, 2016) also undertook an analysis of various approach that are used internationally. These reviews show that there are four approaches to mitigating storey-to-storey fire spread via openings in the external wall:

1. Provide a 900 mm fire resisting spandrel,
2. Provide a slab projection of varying length,
3. Provide sprinklers, and/or
4. Control interface detailing and materials.

Nilsson's findings are presented in Table A/B-6.

The dimensions of building elements from various jurisdictions give some context, these figures do not necessarily help with understanding what these measures are expected to achieve, or how they might interface with other aspects of a building's fire safety strategy.

The explanatory notes in NFPA 5000 (USA) (NFPA 5000, 2018), provide more insight into the raw code requirements. These are given in A.8.9.3.1 as follows:

> *"It is acknowledged that, when a fire grows to full room size (post flashover) in a multistory building, the fire might spread from the story of origin to the story above via the exterior. The phenomenon of exterior flame spread from window to window is sometimes referred to as a "leapfrog" effect. The leapfrog effect can occur in buildings with non-fire resistance–rated exterior walls, as well as in buildings with fire resistance–rated exterior walls having unprotected window openings on adjacent stories. Fire experience indicates that fire spread beyond the story of origin via the exterior can occur in 15 minutes to 20 minutes or less without fire department intervention.*
>
> *The leapfrog effect is addressed in 37.1.4 by requiring that windows on adjacent stories be separated vertically a minimum of 36 in. (915 mm) by a 1-hour fire resistance–rated spandrel or exterior wall assembly or that a 30 in. (760 mm) 1-hour fire resistance–rated flame barrier, or "eyebrow," project horizontally from the exterior facade between the windows. These measures are typically applied to buildings greater than three stories. How- ever, actual fire experience has shown that a 36 in. (915 mm) spandrel might not be sufficient to prevent fire spread via the exterior from window to window. However, the requirements for 1-hour fire resistance–rated spandrels or eyebrows are traditionally waived in buildings protected by automatic sprinklers, and most high-rise buildings are equipped with automatic sprinklers.*
>
> *In summary, fire safety in high-rise buildings is largely dependent on the successful operation of automatic sprinklers. In the rare case where automatic sprinklers fail to control a fire, and a fire grows to a large size (post flashover) in a multistory building and is located in a compartment bounded by an exterior wall, and the building is equipped with either non-fire-rated protected windows on adjacent stories or a non-fire resistance–rated exterior wall, fire might spread via the exterior to the story above the floor of fire origin in 15 minutes to 20 minutes. Experience has shown that fire spread via the exterior due to the leapfrog effect is relatively rare. However, under the conditions previously enumerated, such fire spread can even occur in buildings having floor/exterior wall intersections protected by perimeter fire barrier systems tested and fire resistance rated in accordance with the ASTM test method."*

Table A/B-6 International approaches to the spandrel zone, from Nilsson, 2016

Country/ Region	Spandrel height (m)	Horizontal projection (m)	Note
Australia	0.9	1.1	Non-combustible spandrel with a fire resistance of 60/60/60 (REI). Non-combustible horizontal projection with a fire resistance of 60/60/60, having an extension at least 450 mm along the wall.
Denmark	-	-	There are no prescriptive requirements presented in the building regulations in regard to the external vertical fire spread.
Finland	1.0*	-	There are no prescriptive requirements presented in the building regulations in regard to the external vertical fire spread.
France	0.6-1.3**	0.6-1.3**	The dimensions of horizontal projection and spandrel are depending on the C + D rule, which in turn is dependent on several variables.
Hong Kong	0.9	0.5	Spandrel and horizontal projection are to be of a fire resistance rating not less than of the intervening storey.
New Zealand	1.5	0.6	New Zealand building codes [sic] also provides a table with further combinations of different spandrel heights and projection lengths.
Norway	1.2	1.2	These requirements can be omitted if the building contains an automatic sprinkler system.
Portugal	1.1	1.1 – the depth of the horizontal projection	The horizontal projection needs to have an extension of at least 1000 mm along the wall and to be of fire resistance EI60.
Spain	1.0	1.0 – the depth of the horizontal projection	Spandrel of fire class EI60.
Sweden	1.2	-	Vertical openings within 1200 mm need to be fire-rated, either one window in fire class E 30 or both windows in fire class E 15.
UK	-	-	As per commentary
USA	The International Codes: 0.914	The International Codes: 0.762	The International Codes: the openings shall be separately vertically when the openings are within 1524 mm of each other horizontally and the opening in the lower storey is not a protected opening with fire protection rating of less than 3/4 hour. The spandrel and horizontal projection to have a fire- resistance rating of not less than 1 hour.

* This value is a local interpretation in Finland for the vertical distance between openings in the facade
** Values depending on several variables, for more details see (Nilsson, 2016)

This approach, described in NFPA 5000 is consistent with the reasoning of Ashton and Malhotra, Langdon Thomas and Law – to the degree that that ‘magic number’ of 15 minutes

recurs. The approach taken by NFPA places significantly more emphasis on sprinklers than any of the UK authors. The use of sprinklers should be recognised as means to reduce the likelihood of a fire developing to a size where it might present a hazard of storey-to-storey fire spread. However, in the event of sprinkler failure, the code writers accept that fire spread may occur but, using the same logic as Crook appear to draw comfort from the time delay associated with this storey-to-storey fire spread.

A/B-18.7 Summary

On the basis of this review and analysis, the implicit (and sometime explicit) role of the spandrel zone is to delay – but not prevent – the spread of fire between storeys. Some jurisdictions suggest that a fire resisting spandrel wall or slab projection can perform this function, while others appear to see little value in these precautions.

There does not appear to be any quantitative definition of the delay that is perceived to be adequate, but previous authors have drawn a distinction between the ‘rapid’ fire spread that can be caused by the presence of combustible materials within the external cladding, and the delayed fire spread associated with break-out and break-in of a fire plume.

Similarly, emphasis has been placed on the detailing associated with the junction of the external cladding and the compartment floor. The objective of such detailing appears to be to ensure that it is the external cladding assembly that is the ‘weak link’ in a building’s fire safety provisions rather than the internal compartmentation – even where those elements of compartmentation are directly adjacent to the external cladding.

Some jurisdictions also place an emphasis on the effective activation of automatic suppression (sprinklers) to prevent the growth of a fire that may threaten the external envelope. However, even these do not appear to present sprinklers as a ‘panacea’, rather they are simply an additional layer of protection that help reduce the likelihood of needing to prevent storey-to-storey fire spread.

Given this evidence, we would suggest that the pragmatic approach (of accepting vertical fire spread) advocated by Ashton and Malhotra appears to have been universally adopted both within the UK and internationally. It appears that measures to prevent fire spread – for example by the provision of fully fire resisting external walls, or the omission of windows on the storey above an opening – are unpalatable to architects and building authorities.

This approach represents a choice to prioritise other aspects of building function (e.g. the possibility of having windows on adjacent floors) over the prevention of external fire spread.

The emphasis of the measures presented in guidance is therefore on ensuring that the ‘delay’ associated with storey-to-storey fire spread is sufficient in the context of the wider building fire safety strategy. The following section will therefore evaluate the fire safety guidance defined within Approved Document B within this context.

A/B-19. The fire strategy

It has been established that the assumed function of the spandrel zone is to delay the spread of fire, and to ensure that it is the external envelope (rather than the internal compartmentation) that represents the 'weak link' with respect to storey-to-storey fire spread.

Given this performance expectation, to evaluate the measures defined in guidance it is necessary to establish:

1) A definition of what an adequate delay time might be;
2) A definition of the delay time that might be expected given the proposed fire safety measures; and
3) That there are sufficient means of warning and escape for occupants who may be affected by storey-to-storey fire spread.

In the manner of Ashton and Malhotra, AD B recognises that the presence of combustible materials in the external walls may present a medium for fire spread. In the context of the role of the spandrel zone, such combustible materials may risk accelerating the spread of fire, and thereby reducing the delay time for storey-to-storey fire spread. The reaction-to-fire properties of the external wall is the subject of guidance in AD B, and of specific legislation in the form of Regulation 7.

Other fire precautions may also serve to delay the spread of fire, or to ensure that the 'weak link' is, in fact, the external wall – rather than internal elements of compartmentation.

A/B-19.1 Delay time

A/B-19.1.1 Reaction-to-fire

Reaction-to-fire properties of elements of the external wall have been subject to much discussion and controversy since the Grenfell Tower fire. Ashton and Malhotra identified that "*combustible materials need separate consideration, since they could introduce undesirable hazards*".

In relation to storey-to-storey fire spread (as opposed to vertical fire spread that is confined to the external wall), the hazard presented by the presence of combustible elements of construction is as follows:

- That a combustible material may lose integrity and allow the passage of fire or smoke into an upper floor,
- That a combustible material may add fuel to an existing fire and result in greater heat flux from the external plume on upper storeys – thereby hastening the spread to upper storeys, and

- That a combustible material may allow the fire to spread on the external wall – thereby introducing the potential for a fire to spread to multiple storeys simultaneously, or in quick succession without the need for an external plume associated with a flashover fire to drive such spread.

Regulation 6(3) and 7(2) and the various clauses within AD B limit the combustibility of elements of construction in the external wall. Where such materials are prohibited it may be assumed that they will not make a significant contribution to the fire hazard as described above. Where combustible materials are proposed for use on the external wall (and, therefore, may contribute to the hazards described above), BS 8414-1 or BS 8414-2 are used in conjunction with the performance criteria defined in BR 135. This sets the threshold for the acceptable level of hazard that may be presented by an external wall system – when the components are not all of limited combustibility.

It is understood from MHCLG that the adequacy of the current guidance in relation to the specific clauses, tests, and acceptance criteria for the presence of combustible materials are subject to review in a separate research activity; these will not, therefore, be reviewed in this report. However, of particular note in relation to the definition of an adequate delay time is the presence of the 15 minute 'magic number' within BR 135. The failure criteria are defined in relation to the exceedance of specific temperatures within 15 minutes of the test start time at a high level within the tested system. After fifteen minutes the temperature criterion may be exceeded without the test being classified as a 'fail'. Thus, it is notable that BS 8414 and BR 135 appear to follow a similar logic for fire spread on the external wall as has been presented in the previous sections for storey-to-storey fire spread. Nevertheless, the relationship between the specific failure temperature criterion and the ignition of the upper floor (as described by Ashton and Malhotra) remains undefined.

This is notable because, the need for combustible materials on the outside of the building is not as self-evident as the need for windows in the external wall of a building. Thus, while Ashton and Malhotra's pragmatic acceptance of fire spread – on the basis that windows could not be omitted – is not as self-evidently pragmatic as the need to accept the presence of combustible materials. The desire to put combustible materials on the external wall of a building must, therefore, be a function of other (less obvious) aspects of the building's design process and expected functionalities.

A/B-19.1.2 Fire resistance and restraint

The legacy of Ashton and Malhotra's detailing recommendations are present in the current editions of AD B. They recommended "*separate anchoring of the cladding panels to the building and sealing of gaps between the edge of the floor slab and the cladding panels by a method capable of surviving exposure to fire*". AD B recommends that:

> *"At the junction of a compartment floor and an external wall with no fire resistance, the external wall should be restrained at floor level. The restraint should reduce movement of the wall away from the floor if exposed to fire."*

In Volume 1 of AD B, diagram 8.1 (Figure A/B-31) illustrates the junction between the external wall and the compartment floor. This figure shows the distinction between cavity barriers and fire stopping – with fire stopping being provided between the slab edge and the

external wall and cavity barriers being provided within cavities in the external wall. In such cases, the implication of AD B is that the fire stopping should be of the same standard of fire resistance at the compartment floor.

Thus, AD B recommends that compartmentation should be maintained up to the edge of the external wall, and that the external wall should be restrained at floor level to prevent the formation of a gap through which fire or smoke could pass. These two measures, together, appear to be an attempt to ensure that the external wall is the weak link and that the external wall will fail before fire can pass through internal compartmentation.

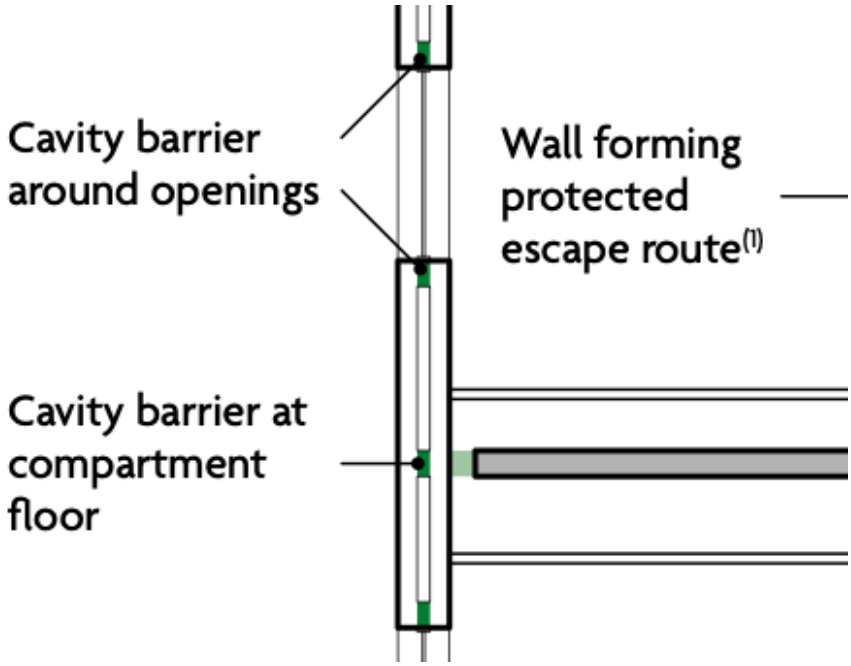

Figure A/B-31 Extract from diagram 8.1 V1 AD B

A/B-19.1.3 Summary

The measures in AD B appear to be consistent in their intent with the logic of delay an the ‘controlled failure’ of the weakest link. However, while BR 135 implies that 15 minutes might be an acceptable delay time for fire spread on the external cladding, there is no quantification within AD B of any criterion for defining an acceptable delay to fire spread between storeys.

Similarly, while there is a clear attempt to ensure the external wall is the ‘weakest link’, the guidance is silent on the topic of how weak this link should be. The external wall may be formed from a wide range of different cladding systems and it would be unreasonable to expect that these would provide uniformity of performance in relation to the speed at which storey-to-storey fire spread would occur.

A/B-19.2 Warning and escape

The connection between storey-to-storey fire spread and the need for occupants to escape from upper storeys has long been established. In 1960 it had been noted in the Architect’s Journal that the Ministry of Education had a “*liberal attitude*” to the provision of fire resisting

spandrels because they had "*stringent and definite requirements for means of escape*" (Rostron, 1960). At the time (as described in previous sections) many were seeking to omit the requirement for a fire resisting spandrel. However, there was a recognition that this would only be possible if "*adequate and effective means of escape*" were used (Rostron, 1960).

When Ashton and Malhotra's findings were implemented in national building regulations, this represented an acceptance of storey-to-storey fire spread. However, there does not appear to have been a radical rethink of means of escape. As noted by Todd (Todd, 2018) with reference to blocks of flats, updated egress guidance in 1971 (Todd, 2018) was based on the assumption that the effective compartmentation demanded by the building regulations was sufficient that it should no longer be "*assumed that entire storeys, or even adjoining flats, need be evacuated if a fire occurred in a flat*". Todd notes that this evacuation "*principle became known as 'stay put'*".

The 'stay put' strategy is discussed in AD B (*Approved Document B - Volume 1: Dwellings*, 2019) as follows:

> *"Provisions are recommended to support a stay put evacuation strategy for blocks of flats. It is based on the principle that a fire is contained in the flat of origin and common escape routes are maintained relatively free from smoke and heat. It allows occupants, some of whom may require assistance to escape in the event of a fire, in other flats that are not affected to remain."*

This description is contrary to the acceptance of storey-to-storey fire spread that is embodied by the recommended fire precautions in the spandrel zone. However, the acceptance of fire spread is not fully rejected in AD B – because the guidance goes on to state that:

> *"Sufficient protection to common means of escape is necessary to allow occupants to escape should they choose to do so or are instructed/aided to by the fire service. A higher standard of protection is therefore needed to ensure common escape routes remain available for a longer period than is provided in other buildings."*

This is consistent with the assumption in AD B that "*simultaneous evacuation of all flats is unlikely to be necessary due to compartmentation'*" nevertheless it is a foreseeable possibility.

Thus, while 'stay put' is based around the idea that occupants will remain in their apartments, it is not a 'single safety condition'. A secondary safety condition is provided if an occupant a) recognises the threat of a spreading fire; b) decides to escape, and c) is able to escape d) is instructed/aided by the fire and rescue services to escape.

Therefore, the stay put strategy, as it is embodied by current guidance, makes some provision for the event of storey-to-storey fire spread. However, it is not made explicit within AD B that storey-to-storey fire spread is to be expected. Similarly, the mechanisms by which the occupants of upper stories will recognise the threat of a spreading fire or can be alerted to a fire and given instruction to evacuate are not made explicit. Thus, the decision to escape, the ability to escape and the means by which instruction/aid by the fire and

rescue services will be provided are undefined within the Building Regulations or associated guidance.

In the context of occupants being required to make a decision to escape due to storey-to-storey fire spread, it is noteworthy that within the current Building Regulations or guidance there is no definition of competency requirements for the occupants of a building that will enable them to recognise and react to the threat of a spreading fire. Similarly, no specific detection measures are specified to protect against the hazard of fire ingress. Occupants on upper stories would therefore be reliant on an apartment's ordinary detection measures.

Crook assumes that there is sufficient delay in the progression of storey-to-storey fire spread that occupants are able to egress of their own accord, or if instructed to do so by, for instance, the fire and rescue services. However, in the absence of definition of other fire safety provisions such as: the specification of an 'adequate' period delay for building elements, a means to alert occupants of a spreading fire, and a definition of the measures necessary to support fire service operations over multiple storeys – the implementation of the stay put principle within the current guidance does not seek to support Crook's assumptions with regulatory controls. Instead, it is implicit within the guidance that Crook's reasoning is sound. The absence of regulatory controls in relation to Crook's assumptions represents, therefore, a 'blind spot' within the current guidance to the Building Regulations.

A/B-20. Typologies and details

It has been demonstrated that the junction between the compartment floor and the external wall performs a critical function in relation to the assumption that underpin Approved Document B. Similarly, it has been shown that although the external wall is expected to fail during the course of a fire, there is an implicit expectation that the failure should occur after some, undefined, period of delay.

There are wide range of different construction technologies that are currently used to create the external envelope of buildings. Indeed, the bespoke manner in which many buildings are designed means that each building envelope is often unique. However, despite this infinite variety, there are a limited number of 'typologies' of construction that are used – and building systems can generally be categorised into these typologies.

The purpose of this section is to describe the key typologies of building envelope construction that are commonly used within the contemporary construction industry. These categories have been identified based on reviews of:

- Academic literature and textbooks,
- Trade journals,
- Industry guidance documents,
- Structured interviews with practitioners, and
- Input and feedback from the projects Expert Review Panel.

In addition to defining the key construction typologies, the project has sought to identify industry best practice in relation to: the detailing of the restraint of the external wall at floor level (pursuant to the relevant clauses in AD B), the fire stopping detail at between the floor and external wall, and the location of any cavity barriers within the external cladding.

The purpose of identifying these typologies of construction is to allow the closer examination of the performance of these systems during any subsequent experimental phase of the project.

A/B-20.1 Built-up wall vs curtain wall

There are two categories of external wall construction into which all other forms of construction can be grouped. That is, the 'built-up wall' and the 'curtain wall'.

The built-up wall is constructed on the floor slab of each level within a building, it will typically then be overclad with one or more layers of other products from the outside of the building in order to create the appearance of continuity over the slab edge. The curtain wall, in contrast is affixed to the outside of the building, and completely envelopes the structure. These two alternative approaches are illustrated in Figure A/B-32.

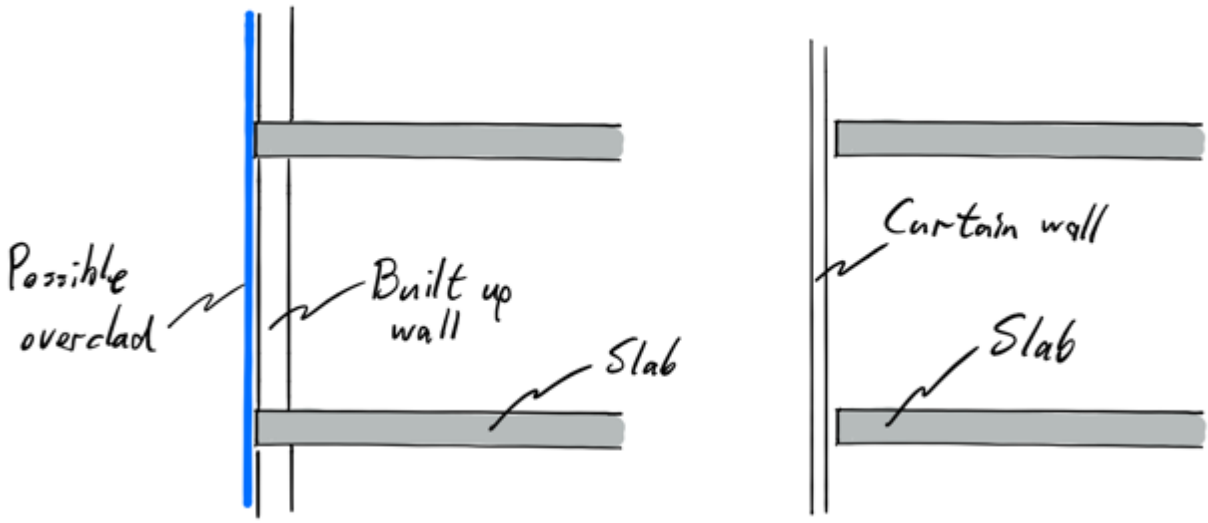

Figure A/B-32 Distinction between a built-up wall, and a curtain wall

A/B-20.2 Built-up wall

In contemporary practice, a built-up wall typically comprises of multiple layers and construction products (Figure A/B-33). These products are usually assembled onsite, and in-situ. A typical cross section of a built-up wall will comprise (from inside to out):

- Internal plasterboard finish,
- Metal or timber framed units (or, less commonly, a masonry wall),
- Membrane,
- Sheathing board,
- Insultation, and
- Over-cladding which could comprise:
  - A rainscreen system (with a cavity); or
  - Brick slip or other ‘finish’ adhered directly to the underlying construction.

Built-up walls are generally not regarded as suitable for higher rise buildings (e.g. above 20 storeys) as external access is often required to compete the construction. There is also a common perception within the industry that built-up walls are the cheapest form of external wall construction. However, many interviewees believe that this perception was false. It was suggested that there were hidden costs to this form of construction that were not evident based on a typical cost plan – for example, the costs associated with managing multiple subcontractors and the issues that this created with interface detailing and quality control.

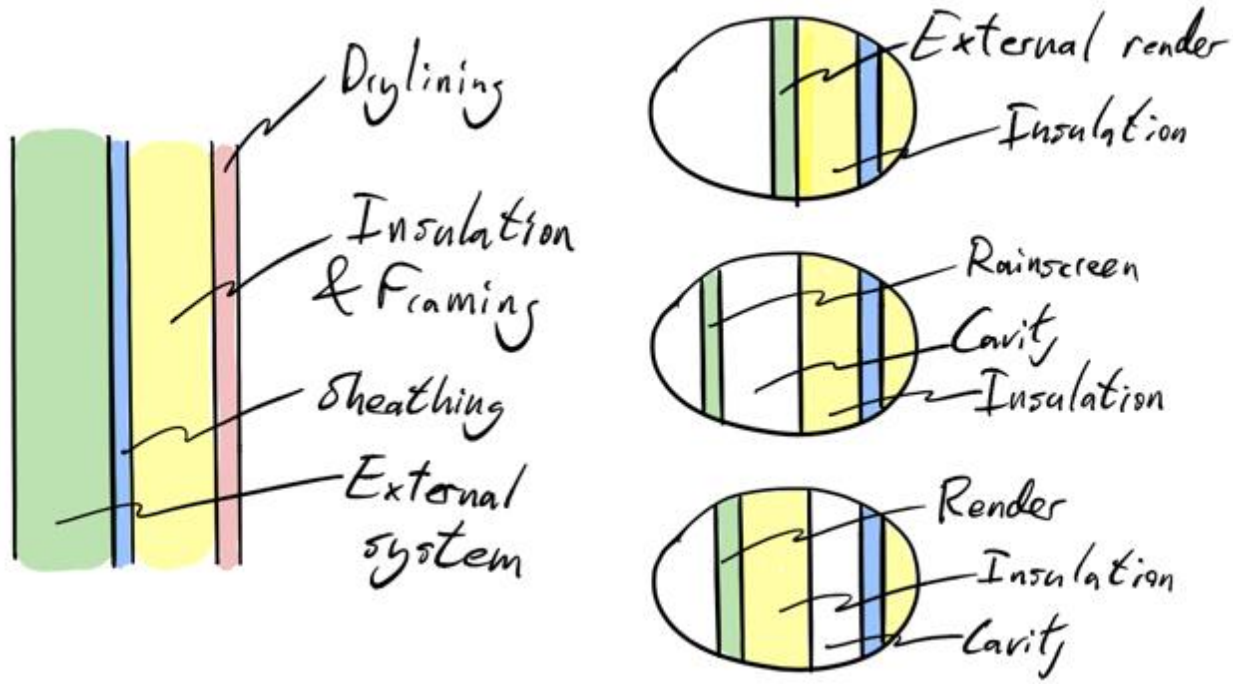

Figure A/B-33 Indicative examples of the several possible configurations for a built-up wall

The Centre for Window and Cladding Technology have drafted a document on Guidance for Built-up Walls, this document describes the various different permutations in much greater detail than has been attempted herein.

A/B-20.2.1 Restraint

In the case of the built-up wall, there are currently no measures taken by practitioners to restrain the external wall at floor level. Since the wall is constructed directly onto the floor, it is unclear what such measures would constitute, and it is typically assumed that this fire precaution is not applicable to this typology of construction.

A/B-20.2.2 Fire stopping

In the case of the built-up wall, there is no gap between the slab edge and the external wall. It is not, therefore, possible to provide fire stopping between these elements. It is typically assumed, therefore, that this fire precaution is not applicable to this typology of construction.

A/B-20.2.3 Cavity barriers

In a built-up wall, current ‘best practice’ is to locate a cavity barrier within any cavities that bypass the slab edge. Cavity barriers are also provided around the perimeter of window openings where these penetrate the built-up wall.

During interviews with practitioners, it emerged that the detailing of cavity barriers in the location around the window edge (where this is close to the floor slab) can be very challenging due to ‘congestion’. It was noted that the guidance can often result in three cavity barriers within 500 mm (Figure A/B-34) and that this can make other building performance requirements difficult to achieve. Some practitioners suggested that in such cases, it was possible to omit one or more of the cavity barriers.

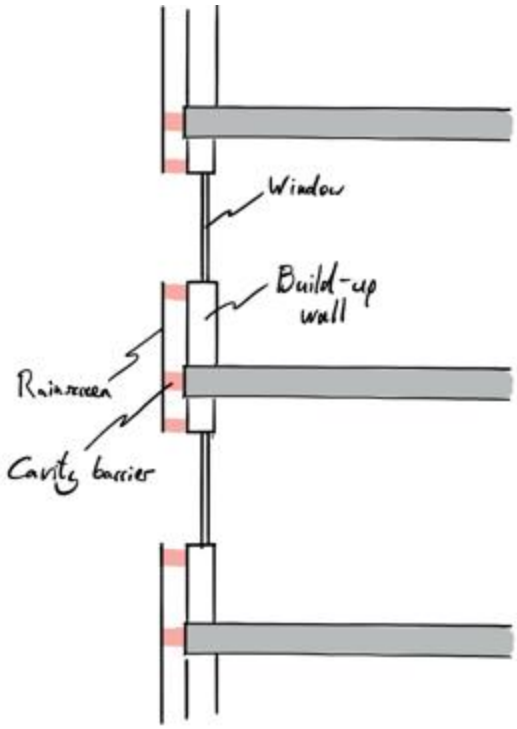

Figure A/B-34 Indicative arrangement of cavity barriers in a built-up wall

A/B-20.3 Curtain wall

Curtain walls envelope the entire structure of a building and thus are situated with an offset from the slab edge. The two main categories of curtain walls are ‘stick system’ curtain walls, and ‘unitised’ curtain walls (Figure A/B-35).

Stick system curtain walls are characterised by being constructed, in-situ, using multiple components. The ‘sticks’ refers to the vertical ‘mullions’, and horizontal ‘transoms’, between which panels or glazing units can be placed. The curtain wall is fixed to the main structure using a variety of details. Vertical support is usually provided every storey, but sometimes every two storey, horizontal restraint is usually provided at every storey in order to resist the applied wind loads.

Unitized curtain wall systems comprise larger prefabricated elements of cladding that are lifted onto the building. A ‘unit’ typically is a full storey height and is typically provided with vertical support by the building’s structure – either at the top or the bottom. Units are typically horizontally restrained at top and bottom. The width of a unitised system can vary. Narrow units are typically referred to a ‘unitized’, whereas wider units (that may span an entire structural bay) are referred to as ‘panelised’.

As with the built-up wall, unitised curtain walling systems are described extensively within CWCT literature, and it will not be attempted to repeat this material herein.

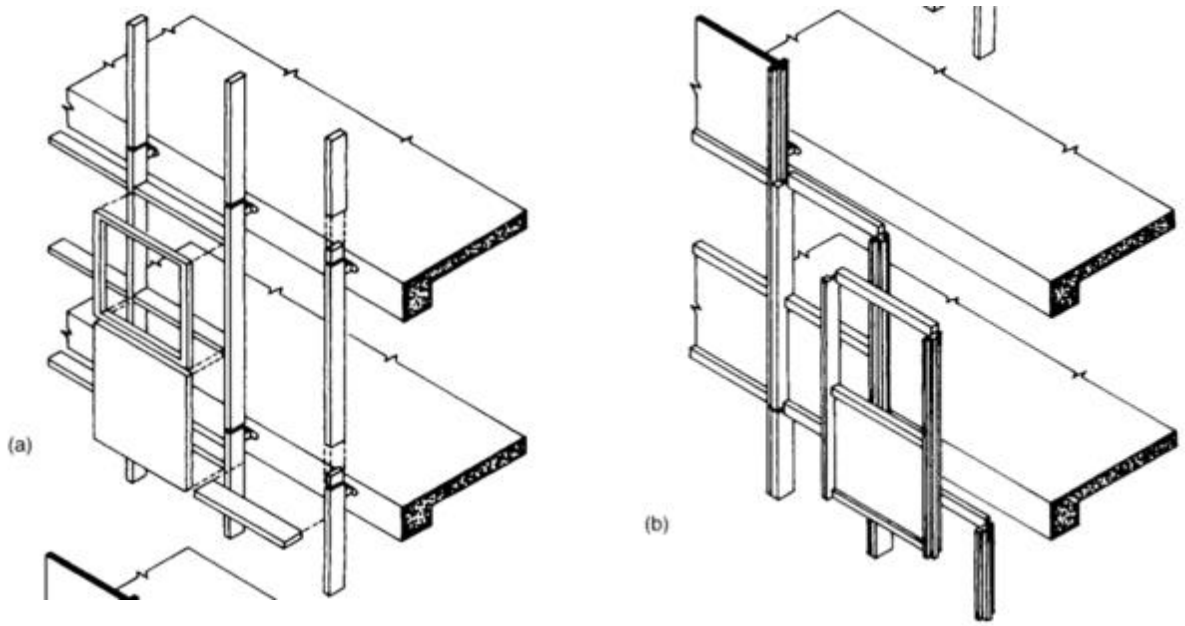

(a) (b)

Figure A/B-35 Curtain wall systems, (a) stick systems; and (b) unitised systems. Both images extracted from (Brookes and Meijs, 2008)

A/B-21. Conclusions on the spandrel

A/B-21.1 Critical appraisal

The measures described in Approved Document B are, in principle, consistent with accepting that storey-to-storey fire spread may occur. The review has found that, while 'stay put' is primarily based around that idea that occupants will remain in their flats, a secondary safety condition is provided if an occupant a) recognises the threat of a spreading fire; b) decides (and is able) to escape; or c) is instructed/aided by the fire service to escape.

Absent from the guidance, and indeed, any of the supporting research is a quantitative assessment of the various parameters of interest. This represents a 'blind spot' with respect to current approaches for meeting the requirements of the building regulations. For example:

- What period of delay might different forms of construction introduce?
  - Are some forms of construction better than others?
  - Do some forms of construction fail too early?
- What period of delay is acceptable in the context of individual storeys and a whole building?
  - Is the 'magic number' of 15 minutes appropriate?
- Are the means of warning for occupants of upper stories adequate?
- Prior to fire spread, what are the acceptable tenability criteria within upper storeys?
- What role do and should the fire and rescue service have in the context of storey-to-storey fire spread?

A/B-21.2 Defining the spandrel zone

Over the course of more than a century, the meaning of the term spandrel in British English has evolved significantly. The range of definitions that remain in use suggest that over this period, 'spandrel' has acquired new meanings but not lost previous definitions. Thus, depending on the context in which the word is used it can have many different meanings.

In order to define the scope of this research, it is necessary to either propose a definition for spandrel – or propose the discontinuation of use of this term in the relevant guidance. Given the prevalence of the term, and the relative consensus among practitioners about some aspects of its meaning, it is the authors' opinion that the term 'spandrel' remains useful, but should be more carefully defined and retained.

With the historic definition of the spandrel, it is clear that the spandrel extends vertically beyond the floor up to the lower edge of the window opening. However, in contemporary

construction the more commonly used definition of the spandrel relates to the elements that conceal the floor slab and associated services. A further confusion regarding the spandrel is the use of the term ‘spandrel panel’. This term relates to a specific element of construction which may be in the location of the spandrel.

Similarly, while the spandrel can be used to refer to a specific element of construction – the spandrel is often used to refer (sometimes implicitly) to the function of the elements of construction. In the case of fire safety, the role of the spandrel has been to prevent or mitigate storey-to-storey fire spread.

There are therefore three approaches for defining the spandrel:

- Approach 1 – Zone. A zone of the building associated with the interface between the floor and the external wall.
- Approach 2 – Function. The function that is required from a product or system, irrespective of its location or form.
- Approach 3 – Product. A specific element of construction (i.e. a product) that fills a space on the external wall and intersects with the spandrel zone.

With the use of the term spandrel, there is therefore potential for confusion with regard to whether the term relates to a generic area (or volume) of a building, or whether it relates to a specific element of construction. In order to avoid this confusion, it is proposed to link the term ‘spandrel zone’ to the function that this part of the building is intended to perform. It is the ‘spandrel zone’ that will be required to deliver all the necessary fire safety functions.

It is therefore proposed to define the spandrel zone as any part of the external wall system that interfaces with horizontal elements of compartmentation (i.e. compartment floors) and is intended to perform a separating function for fire safety.

This definition is flexible as it is not limited to a specific part of the building, and does not limit the extent of the spandrel zone. For example, if openings were not provided on the external wall with the intent of eliminating the hazard presented by vertical fires spread – the spandrel zone would encompass a full storey height. Conversely, if the ‘status quo’ were adopted whereby the interface with the external wall system was intended to provide some delay by means of fire stopping and restrained, then the spandrel zone would be limited to the area immediately around the slab.

When the term spandrel is used to refer to a product, it is any element of element of construction (i.e. a product) that fills a space on the external wall that supports the function of the spandrel zone. This means that infill panels may perform the function of a spandrel or, alternatively, may be located anywhere else on the external wall of a building.

A/B-21.3 Recommendations

In appraising the previous work it is clear that the role of the spandrel, associated fire stopping, and external wall restraint is to serve as a fire precaution. It is intended, to some degree, mitigate the impact of a fire on one storey of a building affecting another (upper)

storey. The hazard that the spandrel zone is attempting to mitigate is a fire in a lower storey and the associated external plume.

However, it is notable that the presence of combustible materials within the external wall of a building presents a different hazard from a compartment fire and external plume. Elements of construction that form part of all the spandrel zone (or infill panels that fill other voids in the external wall) may be constructed from combustible materials – in such a case, they could present a hazard on the external wall.

It is recommended that there should be a clearly separate function of fire precautions associated with the spandrel zone (e.g. fire resistance, restraint, fire stopping) from fire hazard associated with any materials that comprise the external wall (e.g. reaction-to-fire parameters of elements of construction such as spandrel panels and infill panels).

It is understood that the adequacy of the current guidance in relation to the specific clauses, tests, and acceptance criteria for the presence of combustible materials are subject to review in a separate research activity. It is recommended that all elements of construction that might be considered as spandrel elements or infill panels should be included within the scope of this separate research activity.

Part C : Laminated glass

A/B-22. Introduction

Section A/B-3 of this report gives a summary of the regulations and guidance across the UK nations and specifically those that relate to England. With respect to laminated glass, building regulations address particular performance requirements of buildings including fire safety; protection from falling, collision and impact; and safety in relation to impact, opening and cleaning of glazing. There is no specific guidance within AD B on the use of laminated glass however it is implicit that its use should not contribute to the spread of fire or prevent any other performance requirements of the Building Regulations from being met.

Section A/B-4 gives details on the changes to Regulation 7 to the Building Regulations in response to the consultation made by the government following the Grenfell Tower fire. One specific outcome of the changes to Regulation 7 is that glazing is treated as a hazard if it is outside of a window frame, e.g. part of a balcony. In the context of the current study this has resulted in the exclusion of laminated glass balustrades on the balconies of relevant buildings. The assumption appears to have been that the fire hazard associated with glazing is likely to come from laminated glass due to the presence of interlayers (or coatings) formed from polymers that may contribute to the spread of fire on external walls, i.e. do not meet the required reaction-to-fire performance. Similarly, the use of laminated glass in the spandrel zone is also prohibited. However, as noted in the list of exemptions, the use of laminated glass in windows is still permitted, further noting that as part of a 'frequently asked questions' published by MHCLG it states that "*Conventional curtain walls consisting of mullions, transoms and glazing can be considered as a window frame*."

As noted in Section A/B-4 (also see Appendix A), as part of MHCLG's review cycle the December 2018 call for evidence on Approved Document B included an opportunity for stakeholders to comment on the ban on the use of laminated glass in certain applications. In producing this report the anonymised responses to this call for evidence, published by MHCLG in September 2019, have been reviewed with and the responses relating to laminated glass have been captured here. From the 140 respondents and 1,342 responses, there were limited responses relating to laminated glass. These can be summarised as follows:

- There were four requests for clarification of the applicability of the Regulation 7 changes to laminated glass balustrades on balconies which came from the following user groups: Architects, Designer / Engineer / Surveyor, Local Authorities, Manufacturers, and other interested parties. Further information on balcony considerations is provided in Part A.

- There was one query from a professional body as to the use of laminated glass in curtain walling and how that sits within the exemption from the Building (Amendment) Regulations 2018.
- There was one request for clarification to be made between the thermoplastic rooflights and rooflights with PVB laminated glass.

There were no submissions directly supporting the use of laminated glass for balustrades or otherwise in the responses to this call for evidence. No specific technical evidence relating to the fire safety of laminated glass was provided as part of the call for evidence responses reviewed. However, it is understood from communication with industry as part of this research work that a number of bodies have provided or are planning to provide MHCLG with information on the performance of laminated glass, although, with the exception of one industry report, this information has not yet been made available to the authors of this report.

In addition to the December 2018 call for evidence, MHCLG issued a consultation to review of the ban on the use of combustible materials in and on the external walls of buildings including attachments in January 2020, noting that:

> *"As part of the ongoing wider technical review of Approved Document B we intend to commission research on the use of laminated glass in the external faces of buildings to better understand its contribution to fire spread and overall risk."*

As previously noted in Section A/B-4, at the time of writing this report MHCLG has not published an analysis of the January 2020 consultation.

A/B-23. Definitions

Definitions in this part of the report will follow those given in BS 6100:1999 ‘Glossary of building and civil engineering terms’ where possible, and in particular, the definitions given in Subsection 1.4.1: Glazing. However, definition and terminology in other documents cited in this study may not be consistent with those in BS 6100.

Glazing	Fixing infill of plastics glazing sheet or glass. Infill in a door or window which will admit but will resist the passage of air or other elements.
Laminated glass	Glass that comprises a sheet of glass with one or more other sheets of glass and/or plastics glazing sheet and with one or more interlayers.
Laminated safety glass	Laminated glass where in the case of breakage, the interlayer serves to retain the glass fragments, limiting the size of opening, offering residual resistance and reducing the risk of cutting or piercing injuries.
Fire resistant glass	Glass, usually either wired glass, or laminated glass with an intumescent layer, that provides fire resistance for a specified test time.

Definitions are also provided in BS EN 12600:2002 ‘Glass in building — Pendulum test — Impact test method and classification for flat glass’ of which the following are directly relevant to this study:

Laminated safety glass	Assembly consisting of one sheet of glass with one or more sheets of glass and/or plastics glazing sheet material joined together with one or more interlayers. In the case of breakage the interlayer(s) serves to retain the glass fragments, limits the size of opening, offers residual resistance and reduces the risk of cutting and piercing injuries.
Wired glass	Flat translucent, clear or tinted soda lime silicate glass obtained by continuous casting and rolling which has a steel mesh (welded at all intersections) incorporated into the glass during its manufacturing process. The surfaces may be either patterned or plain.

The authors are aware that members of the glass and glazing industry refer to non-glass panels which are used as infill panels supported within the glazing frame as glazing. For example, an aluminium panel supported in a glass curtain wall system. For clarity, the authors of this report are referring to glass panels unless otherwise indicated.

A/B-24. Glass in construction and transportation

Glass and glazing systems are ubiquitous in modern buildings because of the wide range of applications including windows, doors, skylights; curtain walls; infill panels; stair and balcony balustrades; internal separations; canopies, solar shading, etc. Figure A/B-36 shows some of the wide-ranging applications of glass in modern buildings.

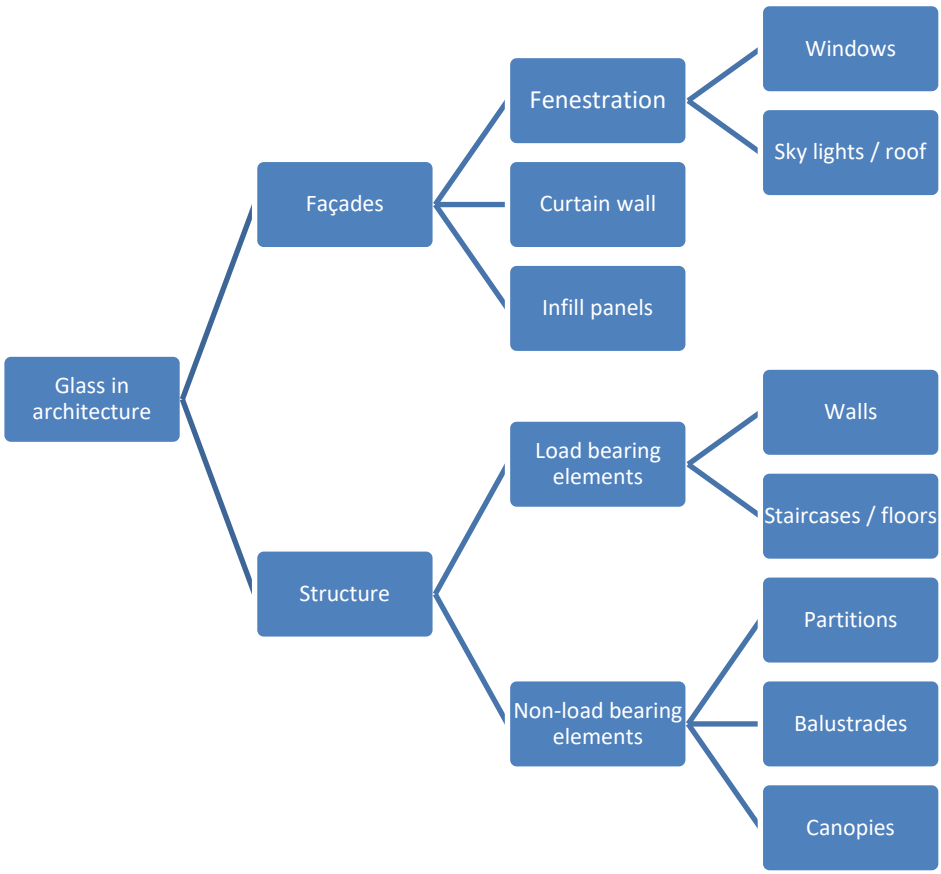

Figure A/B-36 Use of glass in buildings

Glass may be used in the form of single or multiple panes within a construction element (such as a window) that are separated by other parts of the building (such as the wall). Alternatively, the glass may form a contiguous surface such as the case of a curtain wall on the outside of a building or an internal glazed partition. The glass may be oriented vertically, horizontally or at some intermediate angle with numerous techniques of fixing it to other parts of the building, including brackets, bolts, sealants, channels, etc. Glass can be shaped to create curved surfaces. In each case the glazing may have to perform different functions that include resistance to breaking from impact and/or sustained loads such as wind; aesthetic qualities including transparency, colour, shape etc.; the transmission of solar radiation to allow (or reduce) the transmission of light and heat; and performance in fire. Therefore, different glazing systems are used for the different applications to meet the

required performance and laminated glass can be a practical product to use in many of these cases.

More details on the materials and manufacture of laminated glass are given in Section A/B-26. However, in order to understand the context of where things now stand, it is instructive to reflect on the history of glass, and in particular laminated glass, within the built environment.

A/B-24.1 Monolithic glass

A/B-24.1.1 Early history

Monolithic glazing in construction dates back to the first century Romans by the introduction manganese dioxide (occurring naturally as the mineral pyrolusite, which comes from the Greek words for ‘fire’ and ‘to wash’ because of its use to remove tints from glass (Anthony et al., 2004)) to produce clear glass. There is evidence of window glass in Pompeii and in houses in Italy. After the collapse of the Roman Empire there was a considerable loss of technical skill and quantity of glass production (Macfarlane and Martin, 2002). However, crown glass (Figure A/B-37) was being used in Byzantine architecture in the fourth century AD and in the Central Balkans at the end of the twelfth century. By the sixteenth century window glass is said to have been common in most houses in western Europe (Klein and Lloyd, 1992). Stained-glass was used by the Anglo Saxons in the construction of cathedrals and churches during the 7th century and this form of window making reached its artistic peak in later medieval times.

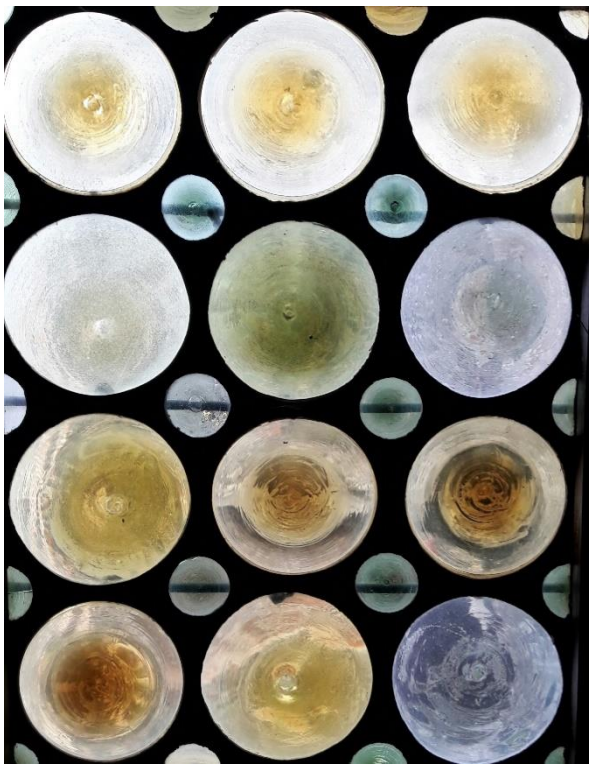

Figure A/B-37 Example of a crown glass window, Ghent, Belgium (M J Spearpoint)

Between the thirteenth and nineteenth century there were a number of developments in the manufacture of architectural glass. However, flat glass in the nineteenth century was still being made using the cylinder method in which large cylinders of blown glass were cut open and then flattened, a method that was at least 300 years old (Klein and Lloyd, 1992) since being perfected around 1668 in France for the manufacture of mirrors by the company now called Saint-Gobain. It was not until around the 1860s that the use of crown glass finally ended. A third method of manufacturing flat glass was cast plate, which according to Klein and Lloyd (Klein and Lloyd, 1992) had been introduced in France during the late seventeenth century, although other sources credit James Hartledsay in 1848. Molten glass was poured onto a metal plate, a roller was used to flatten it and then the glass was ground and polished once it had cooled. The 1845 repeal of the 1696 window tax in England and the construction of The Crystal Palace for the Great Exhibition in 1851 give major boosts to the use of glass in buildings. Almost 300,000 panes of 124 cm by 25 cm cast glass were manufactured by Chance Bros in Smethwick in 6 months for the construction of The Crystal Palace (Klein and Lloyd, 1992). There was even a proposal by Charles Burton to construct a 1000 ft (~300 m) high tower (Figure A/B-38) using the material recycled from The Crystal Palace once it had been taken down. By 1871 William Pilkington had devised a machine that could manufacture larger sheets of glass.

Figure A/B-38 Charles Burton's proposed design for a 1000 ft tower using material recycled from The Crystal Palace (reproduced from www.ianvisits.co.uk/blog/2015/05/04/victorian-londons-skyscraper-that-would-be-taller-than-the-shard/).

Although there were earlier attempts to create a wired glass, it was Shuman (Shuman, 1892) in 1892 who patented a practical and economical method of embedding a wire mesh (Kefallinos, 2013) and in 1898, Pilkington is credited with inventing wired cast glass, which incorporates a steel-wire mesh in the glass (Zippia, n.d.). This type of glass is sometimes given the misnomer 'Georgian wired glass' although it post-dates the Georgian era (1714 to 1830-37 in England), although it may be related to the introduction of the casting method in late seventeenth century France given this is sometimes called 'Georgian wired cast glass'. The addition of the wire prevents the glass from falling out of its frame should the glass crack. It therefore provides a method to resist the passage of smoke and flame through glass that may break in a fire. However, the strength of the glass is also reduced when the product is manufactured because gaps are potentially created due the differential expansion and contraction rates of the wire and glass.

A/B-24.1.2 Modern developments

The first generation of highly glazed offices appeared in Chicago in the 1880s and 1890s (Henrik Schoenefeldt, 2019). Then the advent of twentieth-century Modernism had a major impact on the use of glass in buildings. In Germany in 1909 the design of AEG's turbine factory used glass walls. Prior to becoming the director of the Bauhaus in 1930, between 1920 and 1921 Mies van der Rohe conceived the idea of a 30-storey glass skyscraper with curving walls (Klein and Lloyd, 1992). Distinctive use of glass in architecture appeared in Britain in the 1930s with window-glass sweeping around curved corners. Several leading Modernists left Germany for the US in the lead up to the Second World War and these people were influential on the design of post-war skyscrapers.

The glass skyscraper came to fruition during the 1950s with the UN Building in 1952 (also see Section A/B-18.2) followed by Lever House and the Seagram Tower (David Nicholson-Cole, 2016) which was designed by Mies van der Rohe. Mirrored glass was developed during 1950s and first used on building façades during the 1960s, initially in the US (Ouida Angelica Biddle, n.d.). However, ever since the construction of The Crystal Palace (and the massive hot houses of the 19th century) the problem of temperature control in buildings with large areas of glazing has been a challenge. It is for this reason that Part L of the Building Regulations requires that heat gains be limited through the building fabric. The advent of air conditioning has resolved this to an extent but introduced a high demand for power and is not environmentally friendly, something which is increasingly becoming a driver for construction.

Methods to float glass onto molten metal to create flat panes were first developed by Henry Bessemer around 1843 and further in the early 1900s, but with little success. It was not until the early 1960s that practical commercial float glass became available through the work carried out during the 1950s by Sir Alistair Pilkington. Float glass is now the most commonly used form of glass in the construction industry and elsewhere.

Wired glass can still fail when subject to impact and cause severe injuries if a limb passes through the broken glass. By the 1970s in the US, the poor impact resistance of wired glass had been recognised but the Consumer Product Safety Commission (CPSC) had granted it special exemption from impact safety requirements since at that time it was the only fire resisting glass available ("Handbook of fire-rated glass for schools," 2020). From 2003

onwards, as a result of the availability of various non-wired glass products, exemptions for the use of wired glass were progressively removed from the International Building Code (IBC). The IBC now prohibits wired glass from defined ‘hazardous locations’ and areas ‘subject to human impact load’ (SAFTIFIRST, 2020).

A/B-24.2 Laminated glass

A/B-24.2.1 Introduction

As discussed below, much of the early history of the development and use of laminated glass is within the car and aviation industry. It is difficult to precisely identify when laminated glass was first used in buildings although it would seem it was not any earlier than the mid-1930s. Laminated glass is now used in the construction of buildings for a wide range of reasons including: blast, wind and/or fire resistance; supporting applied dead and live loads as part of a façade or floor system; security; impact resistance whilst remaining intact post breakage; sound attenuation; solar/thermal control; and reduction in UV transmission.

A/B-24.2.2 Transportation

In order to make glass objects less likely to break, in 1902 the Le Carbone corporation obtained a patent for a celluloid (cellulose nitrate) coating. Laminated glass was invented by the French chemist Édouard Bénédictus (1878-1930) in 1903. He later reported that his idea was the result of an accident in which a glass flask that had become coated with cellulose nitrate was dropped but did not shatter (Michel, n.d.). Bénédictus carried out some further development in which a film of gelatin was added to bind the glass together for greater strength. By 1909 Bénédictus had filed a patent and then in 1911 he created the *Société du Verre Triplex* that made a glass composite using plasticised cellulose nitrate (also known as pyroxylin) that was used to reduce injuries in motor vehicle accidents. At the time it was an expensive product since the manufacturing process of the composite was complex. In 1912 the Triplex Safety Glass Company Ltd was formed to make laminated glass windscreens under the French patents. By 1913 Triplex laminated glass was being produced in the US by Libbey-Owens-Ford (and others) and being installed by the manufacturers of luxury cars

Around the same time in England, John Crewe Wood also patented a laminated glass in 1905 for use in vehicle windscreens. Layers of glass were glued with Canada balsam, a turpentine made from the resin of the balsam fir tree. To sell his product he set up the Safety Motor Screen Co. in 1906 (Burgess-Wise, 2001) but with so few cars then on the road he allowed the patent to lapse (Young, 2010).

During the Great War laminated glass was used as the eyepieces of gas masks as normal glass was not able to withstand combat conditions. Shatterproof glass lenses were also put into pilot’s googles using a laminate of cellulose nitrate and camphor (Madden, 2019). Triplex laminated safety glass was also used as a windscreen in military aircraft at this time. However, despite improvements to manufacturing and transportation the glass was prone to cracking and discolouration because of the chemical instability of the pyroxylin laminate layer.

At the end and just after the Great War a number of lawsuits were taken by injured drivers in the US against the car manufacturers to require safety glass be installed. Although Ford won a case in 1917 due to the driver being deemed reckless by the court, public opinion swayed the manufacturers to replace plate glass with laminated safety glass. Watkins and Ryan (Watkins and Ryan, 1933) from the Libbey-Owens-Ford Glass Company noted that by 1927 there was a considerable increase in the demand for laminated glass (presumably to supply the car manufacturing industry).

The 1930 Road Traffic Act in Britain required the use of ‘safety glass’ in car windscreens. Watkins and Ryan (Watkins and Ryan, 1933) also suggest that around 1930, research was carried out to find a practical replacement for pyroxylin which would not have its poor ageing characteristics. By 1933 they published a paper describing a cellulose acetate plastic which gave similar impact resistance to pyroxylin but with better light stability.

Ratay (Ratay, 2017) mentions in his article that Ford partnered with a British glass manufacturer to produce “Indestructo Glass” which was installed in the Model A which was introduced in 1927. The literature is unclear when exactly this product was first available. British Indestructo Glass was incorporated as a public company to manufacture safety or laminated glass in 1929 (Competition Commission, n.d.) whereas the National Archives (“Safety glass from Indestructo Glass Ltd.,” 1931) contains a reference to safety glass from the British Indestructo Glass Ltd. dated 1931. Recently, a share certificate for the Belgian Indestructo Glass Company dated 1929 was offered to collectors through an online seller. The product is said to have used a thin layer of ‘cellulose’ (Ratay, 2017) between the layers of toughened glass, although it is unclear whether this formulation was retained throughout its manufacture. During the Second World War the “Indestructo” product was used in the construction of military aircraft although one advertisement from 1943 mentions flat and curved laminated safety glass panels, but it is not clear what the intended application is. Another advertisement from 1943 notes how the glass maintains its clarity after being subject to the BSI hundred-hour arc-lamp discolouration test at 50 °C and a third notes how the glass does not discolour after 8 hours of boiling (in water presumably). These claims appear to be at odds with the previous comments with regard to discolouration when cellulose nitrate was used as a laminate and so it would suggest cellulose acetate was used although the quoted date for the start of production is not consistent with Watkins and Ryan (Watkins and Ryan, 1933). Eventually British Indestructo Glass was taken over by Triplex Safety Glass in 1966 and production soon ceased.

The next major advance in laminated glass was with the invention of polyvinyl butyral (PVB). The patent for PVB was first lodged in 1927 (Matheson and Skirrow, 1929) and by 1936 it was being used in the US as an interlayer within laminated ‘safety glass’. However there seems to be some divergence with the date of the development of PVB as Madden (Madden, 2019) gives 1939 when a group US companies (including Libbey-Owens-Ford) carried out the work. Since the PVB would not discolour, this type of laminated glass had essentially replaced the earlier types of product.

Madden notes that it was also around the late 1930s that while attempting to produce safety glass two German industrialists invented Plexiglas by pouring a poly methyl methacrylate monomer in between two sheets of glass. The exact date of the discovery is

not clear as Madden claims it was 1936 but other unverified sources claim it may be a few years earlier. Since the glass did not bond to the monomer the original intention of the inventors was not realised, instead it was used in military aircraft as windshields etc. during the Second World War.

A/B-24.2.3 Construction and architecture

The use of laminated glass in construction is a much more recent development although Madden notes that as early as around 1938, trade journals had listings for window products that either incorporated cellulose acetate or were made of Plexiglas. It is understood from research and discussion with manufacturers as part of this work that the move to laminated glass was driven by the need to improve safety. For example, as buildings become taller and larger panes of glass are desired, the potential for breakage at height and, in the case of external wall glazing, falling from height, have driven the use of laminated products and the development of safety standards for laminated glass.

Laminated glass was adopted in building construction as a cladding element in the 1970s (O'Regan, 2015). According to industry representatives, shop front glazing across Europe has used laminated glass over an extended period since the 1970-80s. During the 1980s that laminated glass started to replace the use of plate glass in the UK as a security measure for shop fronts. With the introduction of the impact safety requirements into the 1991 Building Regulations, The English Towns Forum (English Historic Towns Forum, 1993) notes that only toughened or laminated glass could provide both safety and security although the current edition of Approved Document K allows the use of annealed glass which meets specified dimensions with respect to thickness.

It was during the 1970s that Flat Glass in Germany and Glaverbel in Belgium carried out joint research into fire resistant laminated glass and it is reported that the fire-resistant glazing used today is very similar to that originally developed back in the 1970s. However, it seems that the introduction of this glass in the UK market was not immediate and, in their book, published in 1983 Butcher and Parnell (Butcher and Parnell, 1983) note in their discussion on fire resisting glazing that:

> "*Special laminated fire resisting glasses are available from Germany and Belgium which are claimed not only to endure severe fires but also provide some thermal insulations. They are not the same as laminated glasses produced for impact resistance. They* [the special laminated fire resisting glasses] *are expensive and have not been tested to BS 476, Part 8, to date.*"

It is important to note that the focus of attention is the endurance to severe fires, and it is expressed in terms of 'fire resistance' (i.e. through the application of testing to meet BS 476) and there is, from this earlier stage, no attempt to quantify the performance of the laminated glass through its capacity to resist the spread of fire.

By 1987 the publication of PD 6512-3 (see Section A/B-25.1.4) provided fire performance classifications of PVB, intumescent, gel and resin layer laminated glass types suggesting all four types were available for use in construction. To illustrate this point, according to industry sources, prior to 1992 all fire-resistant glass within healthcare buildings was Georgian wired. The Variety Club building at Great Ormand Street Hospital was then the

first to used laminated glass to provide fire separation. Elsewhere, the introduction of fire-resistant laminated glass took a little longer where Cowles (Cowles, 1997) notes that *"Laminated insulating glasses are not yet widely used (in New Zealand) and are not commonly available*".

According to discussions with the industry, the use of laminated glass in the UK for overhead glazing and for glazing at height started in the 1990's. It is reported that it had been commonplace in North America before this and elsewhere in New Zealand NZS 4223:1985 'Glazing in buildings' already allowed laminated glass for balustrades. However, in the 1979 paper by Evans (Evans, 1979) on injuries caused by the shattering of annealed glass it was already recognised that there were benefits of using laminated glass on a balcony. Evans suggested that a revision to the 1972 edition of CP 152 (which eventually became BS 6262:1982) should require rather than recommend the use safety glass in 'risk areas'. Between around 1992 – 96 atria were being included in the design of healthcare buildings as a way to increase the sense of openness and this led to the use of laminated glass for balustrades. However even during the late 1990s the focus was on using framed construction for balcony balustrades in accordance with the then current version of BS 6180 (see Section A/B-25.2.4), in which the infill panels were usually constructed using a 10 mm thick monolithic temper toughened glass (Sapphire Balconies Limited, 2020).

In 1992, development was undertaken on glazing systems for use in hurricane zones and in particular to meet impact and pressure cycling requirements for wind-borne debris protection in the US (Beers et al., 2002). The result was first introduced to the market in 1998 as SentryGlas Plus (SGP) film. Bennison et al. studied the improved structural performance of SGP in comparison to PVB.

Razwick (Razwick, 1999) noted in 1999 that the process of selecting fire-rated glass had changed over the preceding 20 years. Rather than simply using wired glass there were products available that could provide impact safety, sound attenuation, energy efficiency, design aesthetics, etc. Importantly Razwick further notes that along with their fire-rated performance the products differ in characteristics and installation requirements. Looking to the future, Razwick suggested that code requirements for the use of glass would become stricter in some respects, such as the requirement to include a hose stream test when assessing performance.

Related to the development and use of laminated glass, as already noted previously in Section A/B-24.1, from around 2003 building code changes in the US restricted the use wired glass in doors. Razwick (Razwick, 1999) pointed out that a previous restriction of 1,296 square inches (~0.84 m^2) on the use of fire-rated polished wired glass was relaxed in the codes since new products are able to show better performance. It is requirements such as those set out by codes such as the IBC that promote the use of laminated glass in buildings.

A/B-24.3 Recent drivers for the use of laminated glass

A/B-24.3.1 Provision of balconies

The authors have discussed the drivers for the use of laminated glass over monolithic glass with industry. It is understood that the use of glass in balustrades is generally influenced from a planning policy level by documents such as the already mentioned London Plan (Greater London Authority, 2021) which advocate the use of balconies as a means to provide private outside space. Such documents generally advocate that new build private dwellings should have access to some private external space such as a balcony, for example The London Plan states "*All dwellings should have level access to one or more of the following forms of private outside spaces: a garden, terrace, roof garden, courtyard garden or balcony*" and *"a minimum of 5 sq.m. of private outdoor space should be provided for 1-2 person dwellings and an extra 1 sq.m. should be provided*

for each additional occupant". These documents also introduce requirements for light and views which diminish the potential use of solid, opaque barriers around balconies. On high-rise residential buildings, the effect of wind means that these balustrades may need to be solid, or at least provide enough wind shielding, that the outdoor space is useable. Nevertheless, it is better that it remains transparent as consideration needs to be made for the utility of balcony balustrades for occupants who may be confined to wheelchairs and so would find it difficult to see over solid, opaque barriers. For example, in the design of wheelchair accessible housing (*Wheelchair accessible housing*, 2007) it is specified that "*In the main living space show where a clear sightline through a window or glazed door for a seated person will be provided*." Similarly, it is stated elsewhere (London Borough of Islington, 2009) that "*Living room window glazing should begin at 800 mm or lower and windows should be easy to open/operate. The same principle, in terms of the sightlines obtained, applies similarly to balcony balustrades or parapet walls*."

Toughened monolithic glass, while it can achieve the required performance for edge protection and would shield occupants from wind, fails catastrophically when it does fail, with the whole pane breaking into small fragments. In order to mitigate against failure, laminated glass becomes the preferred option to meet the design and functional requirements for the space while ensuring safety from falls. Figure A/B-39 illustrates the process of deduction which would arrive at laminated glass being the appropriate solution for balustrades.

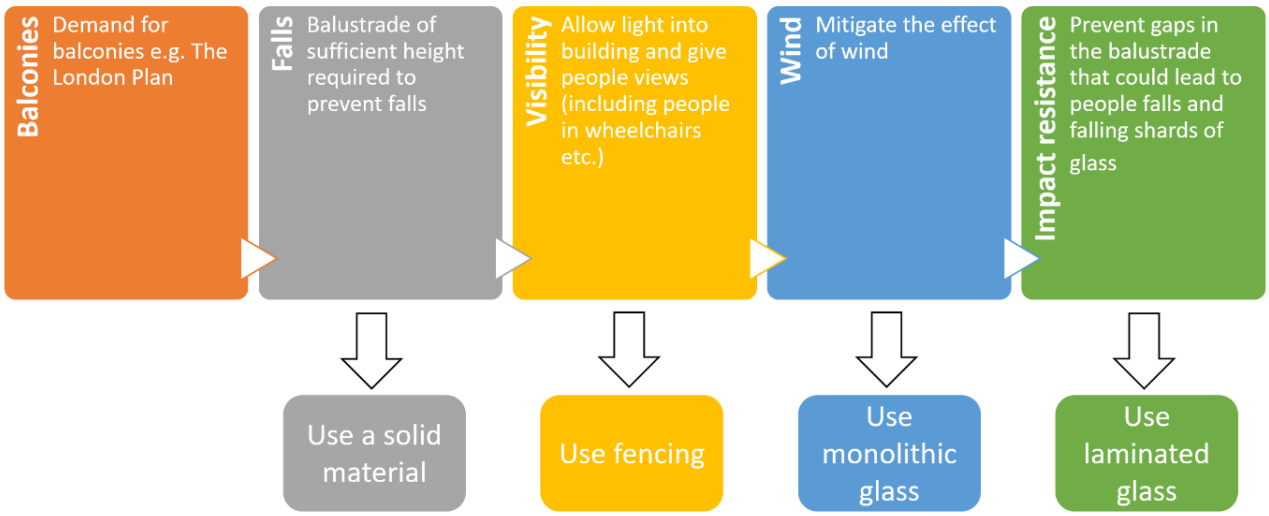

Figure A/B-39 Example decision tree for balconies to apartments

A/B-24.3.2 Failure of monolithic glass panels

One of the primary obstacles to the use of monolithic toughened glass, which remains an issue today, is that of nickel sulphide inclusions. These impurities in the toughened glass can cause failure under very low applied loads or, in some cases, spontaneously with no additional applied load (Karlsson, 2017). Heat soak testing to BS EN 14179-1:2016 can reduce the prevalence of nickel sulphide inclusions in buildings but not remove them completely and the failure mechanism remains. In the case of failure, the thermally toughened glass fractures into many small blunt pieces. This failure mode can be advantageous in some applications but, in the case of edge protection where there is a potential for falls from height, can both cause falls and leave dangerous openings, and result in falling glass fragments. Laminated toughened glass has the safety advantage of remaining intact in the event of one of the panes of glass failing.

It is understood that there have been a number of incidents involving injury as a result of the failure of monolithic glass which served to further drive the preference for laminated rather than monolithic glass for edge protection. Incidents in Edinburgh and Sheffield (discussed below), in 2006 and 2012 respectively, were mentioned as key cases in discussions with industry. However, when these were investigated as part of this project it appears that the failure of monolithic glass was not actually the direct cause of the accidents. It is possible that there are other cases which the authors are not aware of.

The case understood to be the Edinburgh incident involved a 21-month-old toddler who fell to his death through a gap in a glass balustrade on an internal mezzanine in an office building in Edinburgh (*Inquiry under the fatal accidents and inquiries (Scotland) act 1976 into the sudden death of Harry Robert McCreath*, 2010) rather than a breaking failure of the glass. It is understood that this incident, and the fatal accident inquiry that followed, impacted the allowable gaps in balustrades and resulted in a change in the guidance. This was dubbed ‘Ben’s Law’ and resulted in all non-domestic buildings needing to ensure there are no gaps in barriers which a child could fit through. This is addressed by there not being gaps through which a 100 mm sphere could pass.

In what is understood to be the Sheffield accident a two-year-old girl fell to her death through a gap in a glass balustrade where a panel was missing. This was found to be a result of negligence with the panel having been removed by a maintenance worker who used it to replace another panel which had broken. The maintenance worker was charged with manslaughter by gross negligence (Judiciary of England and Wales, 2014). From the newspaper reports it is understood that the glass panels of the balustrade were often breaking, and it is believed that they were monolithic glass although this has not been confirmed.

Other international incidents of glass balustrade failure can be found (NZ Herald, 2016), (Dow, 2017) and also of toughened glass failure in façade applications (Construction Index, 2017). It is worth noting that from newspaper reports alone, limited insight can be gained as to the specifics of the glass installations. It would appear that the failure modes reported are typically disintegration which is characteristic of toughened monolithic glass.

This disintegration of glass is covered by Approved Document K (HM Government, 2013) which addresses the use of glazing for guarding. As per Section 3.2, glazing when used for guarding must consider the recommendations of Section 5 which considers that if the glazing breaks it must break safely. Safe breakage is defined in BS 12600:2002, Section 4. This allows for disintegration of the glazing in failure as long as the particles are sufficiently small. When carrying out an impact test this safe failure mode is defined as follows:

> *"Disintegration occurs and the 10 largest crack-free particles collected within 3 min after impact and weighed, all together, within 5 min of impact shall weigh no more than the mass equivalent to 6 500 mm² of the original test piece."*

Disintegration of the glass could result in falling glass particles and a period for which there is no edge protection. This type of failure might occur with toughened glass but should be prevented if laminated glass is used.

A/B-24.3.3 SCOSS alert December 2019

The Standing Committee On Structural Safety (SCOSS) issued an alert relating to the structural safety of glass balustrades (Standing Committee on Structural Safety, 2019). In the document, concerns are raised around the likelihood that balustrades are designed and installed on an ad-hoc basis with minimal compliance to basic standards and regulations. It is noted that not built to the correct standards they may pose a serious risk to safety.

The document sets out the relevant standards which are mentioned briefly in Section A/B-25 of this report, primarily BS 6180:2011, and provides a run through of the requirements of the building regulations and standards.

In addition to referring to the minimum performance recommended by BS 6180 the SCOSS report suggests that it could be argued that the recommendation relating to preventing occupants falling through gaps in the barrier should still apply if the glass infill panel were to fracture in service. It is recognised that monolithic toughened glass can achieve the containment requirement of BS 6180 and break safely as defined in BS 12600. However, there are secondary consequences such as falling from height if, in the event of failure, the glass would not be able to provide a barrier. Failure of monolithic glass, or laminated glass

if not correctly supported, could also occur while someone is leaning on the barrier resulting in a fall immediately, or at another time as a result of leaving an opening in the barrier.

With respect to fire safety the SCOSS report recognises that the current forms of laminated glass do not achieve European class A1 or A2-s1, d0 and therefore do not meet the fire safety requirements when used as a balustrade on relevant buildings. The SCOSS report then highlights that:

> *"The use of monolithic toughened glass may present a significant risk to life safety if it were to fail in-service and as such may not comply with the relevant building regulations."*

The SCOSS report recommends that the use of laminated glass is discussed with building control authorities from the perspective of life safety.

This SCOSS report provides support for the views that authors have received from industry discussions that avoiding the use of laminated glass on balustrades for fire safety reasons which are not well understood, may result in a greater overall risk to life safety if monolithic glass is used in its place.

A/B-24.3.4 Industry led risk reduction

It is understood from discussions with a major UK contractor that they will not use toughened monolithic glass anywhere on the external wall of high-rise buildings. This is due to concerns about the failure of monolithic glass partly informed by 125 Old Broad Street failure issues (Construction Index, 2017). With the with the introduction of Regulation 7 it is understood that they moved to using aluminium panels in the spandrel area of the façade rather than toughened monolithic glass.

In discussions with representatives from the glass manufacturing industry it was indicated that they would almost never use laminated glass in their products which are made in the factory for use in the spandrel area. However, it is understood from others that similar arrangements utilising laminated glass are often created on site through the use of opaque glass panels and insulation and that this would typically be without the glass manufacturer being aware of the final location or detailing.

A/B-25. Standards

In this section a review of several British Standards in relation to building design and product testing of laminated glass and fire safety is carried out. As noted elsewhere in this study, Approved Documents cite British and/or European standards. Given the large number of current and historical standards in which the content in the general building-related documents is not specific to fire safety and much of the content in the fire safety standards is not specific to glass a full review of every standard is not provided herein. However, the review of standards complements the historical development of laminated glass and its application to fire safety and thus the documents are generally presented in chronological order although in some instances several updated editions have been published at different times.

A/B-25.1 Fire Safety Standards

Existing fire safety standards treat glass as a barrier to block the passage of heat and smoke, and where they express performance requirements this is done using 'fire resistance' terminology. Nowhere in the fire safety standards reviewed is the performance of glass ever considered in terms of the potential for fire spread.

A/B-25.1.1 CP 3

In the British Standard code of practice CP 3: Chapter IV: Part 1: 1971, 'Precautions against fire, Part 1. Flats and maisonettes (in blocks over two storeys)', the only relevant place that glazing is mentioned is in Clause 4.4.9 on glazing to stairways which states:

> *"Because of the danger from radiated heat, the amount of fire resisting glazing should be limited to the minimum possible (see CP 153: Part 4)."*

It is not clear which version of CP 153: Part 4 is being referred to as the date of publication is not provided in CP 3, however it would appear it is likely to be 1972 edition that is mentioned in PD 6512 (see Section A/B-25.1.4) given the version of CP 3 sighted for this project is the amended 1978 edition.

A/B-25.1.2 CP 153

CP 153: Part 4, 'Fire hazards associated with glazing in buildings', published in 1972 provides a discussion on the behaviour of different types of glass in relation to the stability and integrity requirements of BS 476: Part 8. As noted in clause 2.3.3, glass types include annealed, toughened, wired and laminated in which it states:

> *"Laminated glass cracks initially when subjected to uneven heating from a fire. However, the plastics interlayer holds the glass in place until the temperature of the fire becomes high enough to melt or char the interlayer. When this happens the glass gradually falls away."*

A/B-25.1.3 BS 5588

This standard gave guidance for fire precautions in the design and construction of buildings. The standard was split into parts that covered different occupancy types. In the 1983 edition of Part 3 for the design of office buildings the commentary in Clause 9.5.1 in Section 9.5 on glazed elements states:

> *"Partitions, doors and windows, containing traditional annealed wired glass based on soda-lime-silica, although possibly able to satisfy the requirements of the appropriate Part of BS 476 for periods of up to 90 min in terms of integrity, nevertheless permit local high heat transmission and radiation through the glass and so are unable to satisfy the requirement for insulation for more than a few minutes. Such heat transmission and radiation can constitute a hazard to people escaping nearby and could ignite adjacent combustible materials. Unwired 'glass' products able to satisfy the requirements for integrity are available, and some products provide 'insulation' for at least 30 min.*
>
> *Note. PD 6512: Part 3 gives advice and information on the fire performance of glazed elements in buildings."*

There is also a note associated with Clause 9.5.2 that states:

> *"The recommendations in BS 6262 should also be followed. These recommendations may impose further restrictions on the position, size and composition of glazed elements."*

In the 1991 edition of Part 5 ('Access and facilities for fire-fighting') of BS 5588 the commentary in Clause 9.5.1 in section 9.5 on glazed areas states:

> *"Partitions, doors and windows can be glazed with a variety of products, e.g. traditional annealed wired glass based on soda-lime-silica or clear borosilicate glass. Although able to satisfy the integrity requirements of BS 476-22 for periods in excess of 90 min, these permit local high heat transmission and radiation through the glass and so are unable to satisfy the requirement for insulation for more than a few minutes. Such heat transmission and radiation would constitute a hazard to firefighting personnel. Some laminated glasses (intumescent or gel-interlayer) can achieve in excess of 90 min for integrity and insulation in specific glazing constructions."*

In the 1997 edition of Part 7 ('Code of practice for the incorporation of atria in buildings') of BS 5588 the parts relevant to this study given within Clause 23.2 on glazing stated:

> *"Where this code recommends that the accommodation should be separated from the atrium, glazing provided as part of the atrium structure should conform to the following.*
>
> *a) In the event of the glazing failing, it should fail safely and not have an adverse effect on people using escape routes (e.g. falling glass).*
>
> *2) When a smoke retarding construction is used in the absence of any temperature control of the hot gases, the glazing should be [either]:*

iii) laminated glass with a polyvinyl butyral (pvb) interlayer, provided that fire engineering studies indicate that the hot gases will not exceed 400 ˚C temperature."

The various later parts of BS 5588 illustrate how laminated glass could be used to provide a form of fire and/or smoke separation. Furthermore, the use of laminated glass with a PVB interlayer was deemed acceptable under certain temperature restrictions although why 400 °C was selected is not expanded upon.

A/B-25.1.4 PD 6512

The BSI Published Document (PD) 'Use of elements of structural fire protection with particular reference to the recommendations given in BS 5588 "Fire precautions in the design and construction of buildings" — Part 3: Guide to the fire performance of glass' was released in 1987. It superseded the earlier CP 153-4 'Windows and rooflights" — Part 4: "Fire hazards associated with glazing in buildings' published in 1972 (see Section A/B-25.1.2) which was withdrawn in April 1986 as it had been recognised that there had been a number of improvements to glazing systems and their performance in fire.

Clause 5.2.1 notes that:

> *"The selection of glass is critical and is dependent on the fire performance required, based on tested constructions. In addition, the selection of glass may be influenced by a need for human body impact resistance, sound insulation, anti-bandit or bullet resistance or aesthetic appearance."*

Table 1 (Table A/B-7) provides the fire properties of glass as classifications according to various parts of BS 476 in which, other than resin interlayer glass, the surface spread of flame is Class 1 irrespective of the type and only the laminated glass with PVB interlayer is classed as Combustible.

Table A/B-7 Fire performance properties of glass (excluding fire resistance), Table 1 PD 6512

Type (see note 1)	External fire exposure[b] (BS 476-3:1958)	Non-combustibility (BS 476-4)	Fire propagation index (BS 476-6)	Surface spread of flame (BS 476-7)
Annealed (non-wired)	AA	Non-combustible (see note 2)	$I \leq 12$ and $i_1 \leq 6$	Class 1
Wired	AA	Non-combustible (see note 2)	$I \leq 12$ and $i_1 \leq 6$	Class 1
Toughened	AA	Non-combustible (see note 2)	$I \leq 12$ and $i_1 \leq 6$	Class 1
Laminated				
a) PVB (polyvinyl butyral) interlayer	AA	Combustible	$I \leq 12$ and $i_1 \leq 6$ (see note 2)	Class 1 (see note 2)
b) Intumescent interlayer	AA	Non-combustible (see note 2)	$I \leq 12$ and $i_1 \leq 6$	Class 1
c) Gel interlayer	AA	Non-combustible (see note 2)	$I \leq 12$ and $i_1 \leq 6$	Class 1
d) Resin interlayer	See note 3	See note 3	See note 3	See note 3
Special composition (borosilicate)	AA	Non-combustible (see note 2)	$I \leq 12$ and $i_1 \leq 6$	Class 1
Glass blocks	AA	Non-combustible	$I \leq 12$ and $i_1 \leq 6$	Class 1

NOTE 1 The performance may be different where adhesive films have been applied.

NOTE 2 That is to say, it satisfies the requirements for class 0 combustible materials.

NOTE 3 The performance of laminated glass constructed with resin interlayers has not been tested.

[a] See Table 2.

[b] Thickness: 4 mm minimum.

A/B-25.1.5 BS 9999

BS 9999:2017 is a code of practice for the 'Fire safety in the design, management and use of buildings'. Laminated glass is only mentioned a few times in regard to a separation function. In the commentary accompanying Clause B.2.3 on glazing elements the standard states:

> *"In the event of fire, where an enclosure is required, appropriately classified glazed assemblies are capable of providing smoke resistance or fire resistance (i.e. integrity or integrity and insulation), according to classification. Where the maximum possible smoke temperature is no more than 200 °C (as in B.5.2) then laminated or toughened glazed systems should be assumed to be suitable to form a smoke-retarding enclosure, provided that there is no risk of fire and flame exposure from either side of the glazing. If higher smoke temperatures are likely then either a classified fire-resisting glazed system tested in accordance with BS EN 1364-1 should be used, or an assembly conforming to BS EN 12101-1."*

where Clause B.5.2 relates to the maximum temperature for a smoke layer in an atrium which includes a smoke and heat exhaust ventilation system. A similar comment regarding the 200 °C criterion and flame impingement is given in Clause B.4.4 c) 2). Interestingly Clause B.5.4.2 b) 3) in the 2008 edition of BS 9999 states:

> *"pvb laminated safety glass (conforming to BS EN ISO 12543-2), provided that the anticipated temperature of any hot gas or smoke likely to be in contact with the*

laminate glass layer, as demonstrated by design modelling, is no greater than 300 °C."

The 2008 edition of DD 9999 also gives a 300 °C criterion, yet the 2005 edition of DD 9999 notes in Clause C.5.4 a) 3) that:

> *"laminated glass with a polyvinyl butyral (pvb) interlayer, provided that fire engineering studies indicate that the hot gases will not exceed a temperature of 400 °C."*

with a note that further states:

> *"If a laminated glass is required for other reasons and the hot gases could exceed 400 °C, the glass used in the laminate construction should be toughened glass in accordance with BS 6206:1981, Class A."*

Therefore, the hot gas temperature criterion in the evolution of BS 9999 began with the value of 400 °C corresponding with BS 5588 but this has been progressively reduced to the current value of 200 °C, although the reasons for this are not expressed.

Elsewhere Clause B.4.4 in BS 9999:2017 notes that:

> *"Overhead (roof) glazing needs to be designed to minimize the risk of injury due to falling glass during normal use of the atrium. This generally requires the use of polyvinylbutyral (pvb) laminated safety glass on the inner pane facing into the atrium space, in accordance with the recommendations in BS 5516-2."*

The equivalent clause in the 2008 edition of BS 9999 provides more detailed guidance on what type of glass is appropriate for different heights whereas this does not appear in the 2017 edition. The guidance notes that glazing including PVB laminated safety glass is applicable to all heights.

A/B-25.2 Glass, glazing and balcony standards

As for the fire safety standards, it is important to note that, with the exception of BS 8579, these standards do not mention the potential for fire spread as a performance criterion for laminated glass. BS 8579, which was written after the Grenfell Tower fire, refers to fire spread in unquantified terms and while it is important that it is mentioned, the usefulness in this respect is limited.

A/B-25.2.1 CP 152

According to Evans (Evans, 1979), CP 152 '*Glazing and fixing of glass for buildings*' was originally published in 1960 and then revised in 1966 and again in 1972. CP 152 was then superseded by BS 6262:1982 (see Section A/B-25.2.3). None of the editions of CP 152 have been accessed for this project although it would appear the 1972 edition is available from BSI and does mention fire protection. A reference to the 1960 edition is made by Langdon Thomas (Langdon Thomas, 1963) in which he notes that "*2 sq. ft of wired glass in a ½ hour door as the maximum permissible*" which suggests CP 152 is focused on fire resistance.

A/B-25.2.2 BS 6206 and BS EN 12600

BS 6206 was the ‘Specification for impact performance requirements for flat safety glass and safety plastics for use in buildings’ and is referred to in several of the other standards discussed as part of this study. BS 6206 has not been reviewed in detail here but makes no reference to fire safety or fire performance. The 1981 edition of the standard was partially superseded by the 2002 edition of BS EN 12600 ‘Glass in building — Pendulum test — Impact test method and classification for flat glass’. This standard also makes no reference to fire safety or fire performance.

A/B-25.2.3 BS 6262

British Standard BS 6262 ‘Glazing for buildings’ comes in seven parts of which Part 3, ‘Code of practice for fire, security and wind loading’ and Part 4, ‘Safety related to human impact’ are of relevance to this study.

Table 1 of BS 6262-3:2005 refers to the British and European fire test standards (e.g. the BS 476 series, BS EN ISO 9239-1, etc.). On laminated glass Clause 4.3.2.3 states:

> *“The individual panes of laminated glass will behave in the same way as for the particular glass type described elsewhere in this standard.*
>
> *If the interlayer material is a plastic, not specifically designed for fire resistance, it will quickly break down and make no effective contribution to fire resistance.*
>
> *If the interlayer is specially formulated to contribute towards fire resistance, the laminated glass, depending on the framing system and glazing method, can give considerable periods of integrity and insulation.”*

Table 2 (Table A/B-8) in the standard provides the fire properties of glass as classifications according to BS 476 whereas Tables 3 and 4 express the fire resistance performance either as integrity only or integrity and insulation. Table 2 is replicated here where it is noted that this table essentially replicates what had been published in PD 6512 in 1987.
Table 1 BS 6262-3:2005 notes that:

> *“According to European Commission Decision 96/603/EC (consolidated 2003/424/EC), glass, including annealed, heat strengthened, chemically strengthened, toughened and laminated, has been classified, in accordance with BS EN 13501-2, as long as there is less than 1 % organic content, as Class A1, as provided for in European Commission Decision 2000/147/EC, without the need for testing.”*

The implications of this are discussed in Section A/B-25.3.

Table A/B-8 Fire performance properties of glass (excluding fire resistance), Table 2 BS 6262-3:2005

Type	Non-combustibility tested in accordance with BS 476-4:1984	Fire propagation index tested in accordance with BS 476-6:1989	Surface spread of flame[b] tested in accordance with BS 476-7:1987
Annealed (non-wired)	Non-combustible[c]	$I < 12$ and $i_1 < 6$	Class 1
Wired	Non-combustible[c]	$I < 12$ and $i_1 < 6$	Class 1
Toughened	Non-combustible[c]	$I < 12$ and $i_1 < 6$	Class 1
Laminated			
a) PVB (polyvinylbutyral) interlayer	Combustible	$I < 12$ and $i_1 < 6$[c]	Class 1[c]
b) intumescent interlayer	Non-combustible[c]	$I < 12$ and $i_1 < 6$	Class 1
c) gel interlayer	Non-combustible[c]	$I < 12$ and $i_1 < 6$	Class 1
d) resin interlayer[d]	—	—	—
Borosilicate	Non-combustible[c]	$I < 12$ and $i_1 < 6$	Class 1
Glass blocks	Non-combustible	$I < 12$ and $i_1 < 6$	Class 1

[a] See Table 3.
[b] The performance might be different where adhesive films have been applied.
[c] Materials termed "non combustible" satisfy the requirements for class 0 combustible materials.
[d] The performance of laminated glass constructed with resin interlayers has not been tested.

A/B-25.2.4 BS 6180

BS 6180 is the 'Code of practice for protective barriers in and about buildings'. There have been several editions, of which the authors of this study have viewed the 1982, 1995, 1999 and 2011 editions, it is understood that at the time of writing this is BS 6180 is under review and a further revision may be released in the near future.

Clause 7.1.2 of the 1982 edition cites laminated glass as a recognized safety glass "…*suitable for protective barriers where the glass is normally used fully framed*". The standard requires that the glass should comply with BS 6206 as appropriate. In the 1999 edition Clause 8.2.1 (i.e. equivalent to Clause 7.1.2 in the 1982 edition) notes that "*For the use of laminated glass where the glass is not fully framed the manufacturer should be consulted*" and this comment is retained in the 2011 edition.

In terms of fire performance, Clause 10.6 on flammability in the 1982 edition discusses the surface spread of flame of plastic infill panels however Section 7 of the standard which covers glass makes no reference to fire. The subsequent editions of the standard also only address the flammability of plastic infill panels.

A/B-25.2.5 BS 8579

BS 8579 is published as 'Guide to the design of balconies and terraces' in which the first edition of this standard was released in 2020. This standard has a direct impact on this study both within the wider context on balcony design, see Part A of this report, as well as the use of laminated glass.

Section 12 of the standard addresses performance in fire, where in relation to laminated glass Clause 12.1 states:

> *"The components of balconies, terraces and walkways, when exposed to fire, including from below, e.g. from a window or other openings, should:*

a) *not be composed of materials or designed such that they provide a medium for undue fire spread over the external envelope of the building;*
b) *not propagate fire downwards, e.g. not produce falling brands or flaming/molten droplets or debris capable of initiating fire below;*
c) *be designed to minimize the risk of becoming detached from the face of the building and present a hazard to persons below, e.g. firefighters or the public;"*

In respect to balconies Clause 12.2 then goes on to say:

> *"Components of balconies […] on all buildings with an occupied floor over 11 m above the lowest ground level and all buildings with stacked balconies, regardless of level of highest occupied floor, should be constructed from materials achieving class A1 or A2-s1, d0, in accordance with BS EN 13501-1:2018. Components for balconies for all other buildings and arrangements should have risk of fire spread assessed and mitigated in the design. Where not possible to achieve all aspects of life safety and performance using materials of at least class A1 or A2-s1, d0, minor components such as […] laminated glass […] could be exempt from this recommendation if an assessment of the risks proves adequate resistance to the spread of fire is maintained."*

with a note that "*Attention is drawn to national regulations regarding the use of certain components, including laminated glass, within balconies and their guardings*". Similar wordings to Clause 12.2 are used in the clause on terraces.

The statements made surrounding the performance objectives are at a disconnect with the prescriptive material classifications provided. While it is appreciated that these are in line with Regulation 7 requirements, it is unclear why these material classifications are appropriate to meet the performance objectives identified. The authors have not seen any work which would provide a basis for the stance that achieving these classifications be required in order to meet the identified performance objectives.

A/B-25.3 European Commission decision 96/603/EC (consolidated 2003/424/EC)

This document (The Commission of the European Communities, 1996) provides a list of commonly used materials which can be assigned a European reaction-to-fire classification of A1 without testing. This list of materials includes heat strengthened, chemically toughened, laminated, and wired glass but importantly also that

> *"None of the materials in the table is allowed to contain more than 1.0 % by weight or volume (whichever is the more onerous) of homogeneously distributed organic material*."

There are two possible interpretations of this. Some saw this to be limiting the interlayer thickness and providing a viable approach for classification of laminated glazing to comply with Regulation 7(2) and 6(3). It is however understood from discussions with some glass manufacturers that, despite significant work, they feel that it is not currently possible to

manufacturer a laminated glass which a sufficiently thin interlayer that it would comply with this requirement.

Others understood this clause to be irrelevant, as laminated glass is a non-homogenous material. The limit on homogeneously distributed organic material could not apply to laminated glass and therefore, since laminated glass is listed explicitly, it can be assigned an A1 classification and its use therefore complies with Regulation 7.

Despite the ambiguity, and apparent exemption from requiring testing for classification, it now seems to be accepted within the industry that laminated glass will not achieve an A1 classification and must be tested. This is covered in more detail by the Glass for Europe report which is discussed further in Section A/B-28.3, however as also discussed in this section, there have been some recent developments.

A/B-25.4 International codes

A/B-25.4.1 Australia

The Australian regulatory framework is different to that of England and Wales in that the National Construction Code, NCC, provides deemed-to-satisfy solutions. NCC Volume 1 contains requirements for Class 2 to 9 buildings, this covers everything from a building containing two separate dwellings to laboratories and public assembly buildings. With respect to laminated glass NCC Volume 1 2019 C1.9 states that glass, including laminated glass, does not need to meet the requirements on non-combustibility which apply to other materials in external walls, common walls and shafts of buildings required to be of Type A or B construction. This exemption makes no reference to the glass installation type.

The Australian window association ‘Guide to Glass and Glazing’ provides an insight into the views of the glass and glazing industry in Australia and sets out the relevant guidance documents which apply. The primary standard relating to glass in construction is AS 1288-2006 – ‘Glass in buildings - Selection and installation’ and this standard is referenced in the Australian National Construction Code.

Being in a country which experiences wildfires, Australia also has guidance on the appropriate design of windows to resist wildfires. This is done through a fire resistance approach rather than via reaction-to-fire. The tests do not however use a standard fire testing furnace.

A/B-25.4.2 Canada

The National Building Code of Canada, NBC, 2015 edition Section 9.8.8.7 states that glass in guards shall be tempered or laminated safety glass or wired safety glass. There is no section specifically addressing balcony balustrades or laminated glass as part of the external wall. It is understood that wired glass may be removed as a safety glass option where impact safety is a concern in the next edition of National Building Code of Canada. Similarly, in the National Fire Code of Canada 2015 there is no mention of laminated glass or safety glass and no requirements on the surface spread of flame are detailed.

A/B-25.4.3 International Building Code

The 2018 edition of the International Building Code states in Section 2407 that glass used for handrails or as a guard *"shall be laminated glass constructed of fully tempered or heat-strengthened glass…."*. Monolithic toughened glass is permitted in handrails or guardrails only where there is no unprotected walking surface beneath them. Additionally, there is a requirement that there is a top handrail which will stay in place should one panel of glass fail. If laminated glass, which has been tested to remain in place following impact or glass breakage in accordance with ASTM E2353, then there is no requirement for a handrail. There are no specific requirements or fire safety considerations for laminated glass with respect to its reaction-to-fire or potential contribution to flame spread.

A/B-25.4.4 New Zealand

The New Zealand Building Code Handbook includes a definition of a smoke separation in which it shall be "…*of non-combustible construction, or achieve a FRR of 10/10/-, except that non-fire resisting glazing may be used if it is toughened or laminated safety glass*." New Zealand Acceptable Solution C/AS1 does not refer to laminated glass and the only place that Acceptable Solution C/AS2 specifically mentions laminated glass is in Clause 4.2.3 on smoke separations.

A/B-25.4.5 Conclusion

Based on the above findings from the review of English language international codes it appears there are currently no restrictions on the use of laminated glass in relation to fire spread.

A/B-26. Materials and manufacture

When considering laminated glass as a composite product there are a number of aspects to be aware of, namely the chemical formulation of the glass layers, any treatment of the glass, the materials used as an interlayer, whether films are applied to the glass, the numbers of layers of glass and interlayers, and the thickness of the materials. As such it is not possible for this report to extensively cover each of these aspects.

A/B-26.1 Glass

Conventional monolithic glass which can be produced using different methodologies is usually categorised as being annealed, toughened (tempered) or strengthened, where the strengthening is by the use of heat or by a chemical process. Panes of glass come in a variety of thicknesses (such as 6 mm, 8 mm and 10 mm) and dimensions.

While modern toughened glass performs better than regular float glass with respect to impact resistance, it is understood from glass manufacturers that issues with nickel sulphide inclusion are a key factor in the use of monolithic toughened glass being avoided in guarding applications. It is understood that nickel sulphide caused issues with spontaneous breakage of toughened glass in the early 2000s (and as far back as the late 1950s (Jacob, 1997)) and influenced the move to laminated glass from monolithic toughened glass. Nickel sulphide issues are now well understood and much less of an issue although it may still be blamed for breakages which occur.

A/B-26.2 Laminated glass

Typically, laminated glass is manufactured by laminating an interlayer material (see Section A/B-26.3) between two or more glass panes. However, glass can also be laminated by applying an adhesive backed polymeric film. In some products the laminated glass may include a combination of laminate material and films; layers of metal mesh; layers of polymeric fibres; etc. In some multi-layer laminated glass products there may be a combination of laminate materials, for example an intumescent laminate between two layers of glass with PVB added between additional layers of glass to one side or both sides of the intumescent section (Sacks and Carpenter, 2015).

As previously discussed in Section A/B-24.2, laminated glass has historically had problems with de-bonding and/or discolouration of the interlayers, but the development of more temperature-resistant and UV stable interlayer materials along with improved design and manufacturing techniques has mitigated most of these issues. For example, SGP is said to exhibit the lowest yellowness index of any laminated glass interlayer. However, edge stability (Kuraray, 2014) remains an issue for designers and architects. Edge stability is defined as a laminate's resistance to forming defects along its edge over time. These

defects can arise in the form of small ‘bubbles’ in the laminate or as discoloration of the laminate itself.

The price of laminated glass has changed over time from being very expensive when it was first developed (as discussed in Section A/B-24.2.1) to the point where by 2010 laminate glass is said to have become cheaper than monolithic glass (Sapphire Balconies Limited, 2020). It is understood that SGP laminate is considerably more expensive than PVB (BA Systems, n.d.).

Depending on the application, the type of laminated glass used may vary so that it meets the desired performance. For example, Blanchard (Blanchard, 2019) reports that the 9th edition of the IBC states that:

> *“Glass used in a handrail, guardrail or guard section shall be laminated glass constructed of fully tempered or heat-strengthened glass.”*

In laminated glass balcony balustrade applications it is understood that around 95% (Stelzer, 2010) make use of a PVB interlayer due to its cost and ability to meet the required performance specification. Typically, 10 mm thick glass and 1.5 mm thick PVB is used for laminated glass in balcony balustrades (Haughton, 2020).

When laminated glass is used in curtain walls (and also the underside of slope glazing and rooflights) there are likely to be elevated ambient temperatures, such as in a glazed atrium, and it is understood that this may influence the choice of interlayer to one which performs better when heated such as SentryGlas. In curtain wall systems there are two types of fire-rated glass that are generally used, being either intumescent laminated glass or gel glass. The former consists of multiple layers of typically 1.5 mm thick interlayer material. Gel glass uses an up to 13 mm thick interlayer between two (or more) layers of glass (Sacks and Carpenter, 2015).

A/B-26.3 Interlayer materials

Interlayers can be manufactured from various materials including Polyvinyl butyral (PVB), ethylene-vinyl acetate (EVA), thermoplastic polyurethane (TPU), polycarbonate (PC), Polyethylene terephthalate (PET), Polyvinyl chloride (PVC) and other materials. One particular material that has already been discussed in Section A/B-24.2.3 is SentryGlas ionoplast (commonly known as SGP). SGP interlayers are significantly stiffer than standard PVBs and as a result, the laminate is marketed as a product that offers 5-times the tear strength and 100-times the rigidity of standard PVB. Various materials can be used to form an intumescent layer in fire-rated glass. These materials include hydrated sodium silicate, graphite, and mono-ammonium phosphate (MAP) (Sacks and Carpenter, 2015).

Typically, a polymer laminate is supplied in foils in which standard PVB foils are 0.38 mm thick and EVA foils are 0.40 mm thick. One or more foils are used to create a laminate of a desired thickness. An alternative to using foils is to use a resin which is poured between two sheets of glass. The method is used where the glass is heavily textured and/or coloured resin is to be used to provided decorative effects. These products are generally

referred to as cast-in-place laminated glass and are as mainly used for aesthetic or acoustic purposes and do not necessarily have a safety performance.

A comparison of the flammability of PVB and SentryGlas (Kuraray, 2019) shows that PVB has a self-ignition temperature of 410 °C versus 470 °C for SentryGlas when tested to ASTM D1929; flame spread indices of 60 and 30 respectively, and smoke developed indices of 350 and 215 respectively when tested to ASTM E84; and reported burning rates of 6.6 mm/min versus 0 mm/min respectively when tested to ASTM D635. Similar data for the other materials have yet to found however in 'laminate glass questions and answers' posted online following an event organised by Sapphire Balconies Ltd it is stated that none of the interlayers that have been tested so far have been non-combustible.

Notwithstanding the improvements in laminate material performance, some may be more sensitive than others to the effects of water, UV and/or higher temperatures (50 °C or above) from nearby halogen lamps, radiators, etc. Sacks and Carpenter (Sacks and Carpenter, 2015) note that sealing the edges of glass that includes a hydrated sodium silicate layer with special aluminium tape protects the laminate during transportation and using multi-layer glass with a PVB laminate glass provide methods to reduce such issues.

A/B-26.4 Films

As discussed in Section A/B-24.2.2, it was with the use of a film of gelatin that Bénédictus first invented laminated glass. These days films are also used to mitigate the effects of heat and light transmission; to provide decorative and privacy features. They can also be used as a safety film for wired glass although San Diego (San Diego, 2011) notes that not all films will perform as required and suggests that some films may contribute to fire spread. While it is not intended to investigate the performance of films to laminated glass in detail, it is anticipated that further understanding will be gained as the project progresses should any additional information come to light.

A/B-26.5 Fixing and support

When laminated glass is used as a balustrade there are a number of methods used to fix it to the structure. Figure A/B-40 illustrates the range of options available. According to one balcony supplier's information the frameless systems are the preferred option as they provide uninterrupted views from the balcony along with a minimalistic appearance when looking at the building. In some systems one or more edges of the glass are concealed with a metal frame such as with the railing and the channel systems. Even with a frameless system a handrail (or capping) is generally recommended. Extruded brushed anodised aluminium capping is the most common material used although stainless steel can also be an option. Typically, the capping will have a square or round top shape (Sapphire Balconies Limited, 2020).

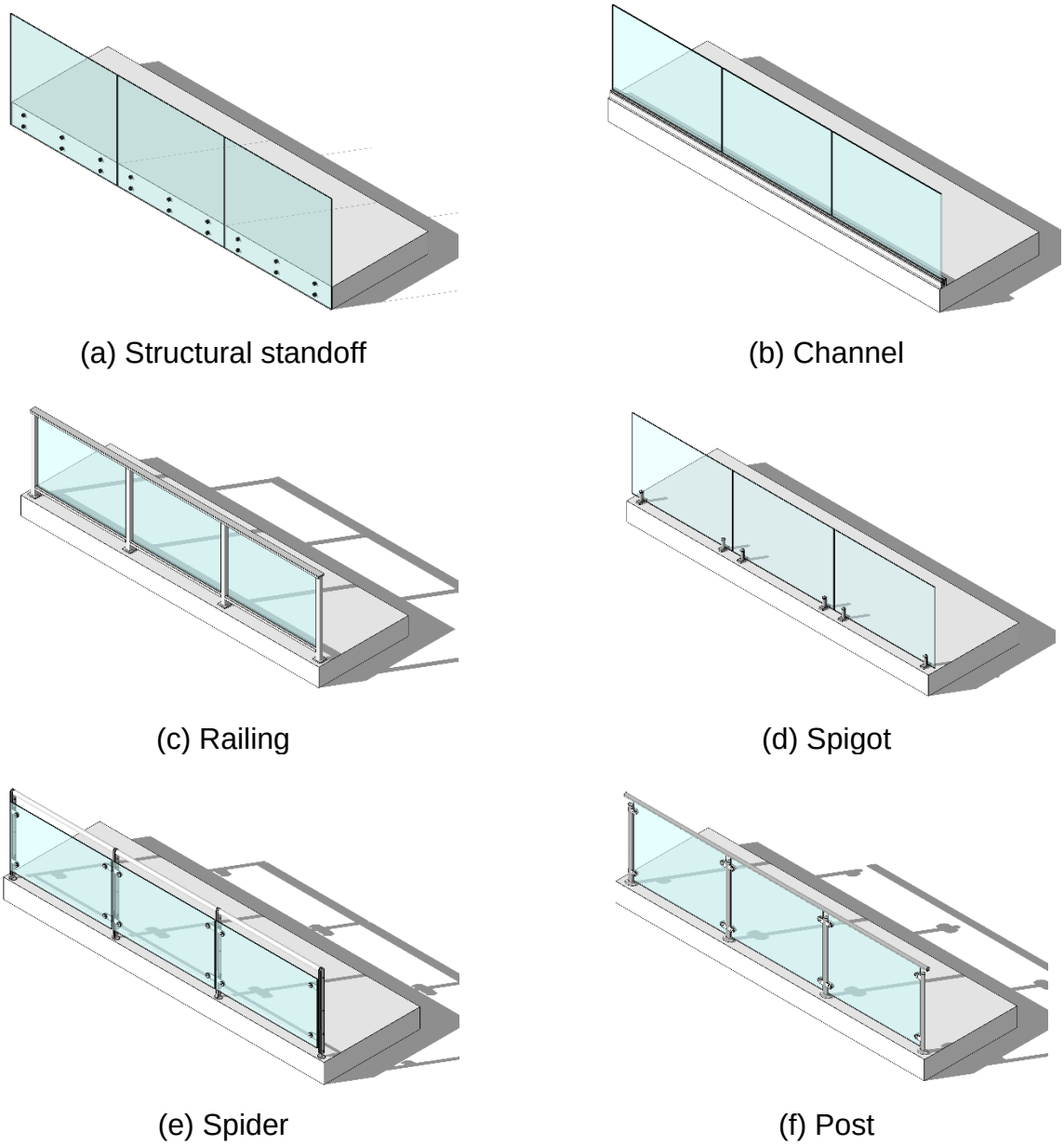

Figure A/B-40 Balcony balustrade glass fixing methods

Attachment systems for Juliet guarding are similar to those used for balustrades and Figure A/B-41 illustrates several methods.

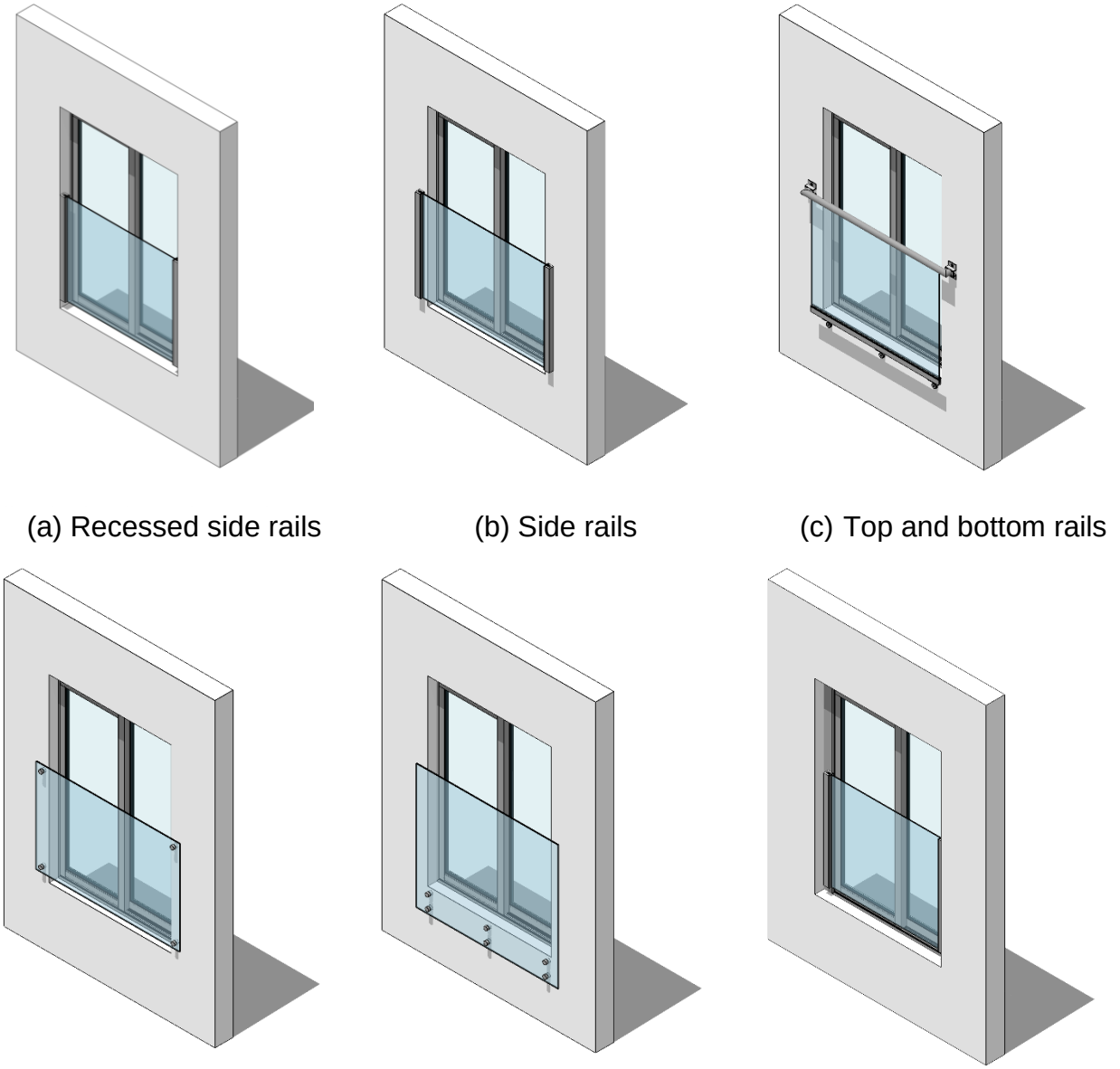

(a) Recessed side rails (b) Side rails (c) Top and bottom rails

(d) Four point (e) Juliet adaptor (f) Fixed to window frame

Figure A/B-41 Glass Juliet guarding fixing methods

As discussed in Section A/B-20.3 there are two types of curtain wall systems, stick and unitised. However, according to a document published by the Centre for the Protection of National Infrastructure (*Introduction to glass curtain wall systems*, 2019) when it comes to glass curtain walls there are also point fixed systems. When laminated glass is used in curtain walls then fixing can be also be achieved by a variety of means. These can be frameless systems which make use of structural sealant to avoid external edge beading and a visible support frame or may make use of mechanical bolted fixings (Button and Pye, 1993). In both cases metal or glass mullions may be used to support the glass. In stick and unitised systems the glass can be structurally glazed to the aluminium curtain wall members either two-sided along either the vertical or horizontal joints or four-sided (Pringle Anzia, 2019). In stick systems the laminated glass can be held using pressure plates or alternatively a channel is used between the glass to only fix the internal laminate (*Introduction to glass curtain wall systems*, 2019). Various point fixed systems are available

which include bolt fixings to fin plates and tension cable arrangements, as shown in Figure A/B-42.

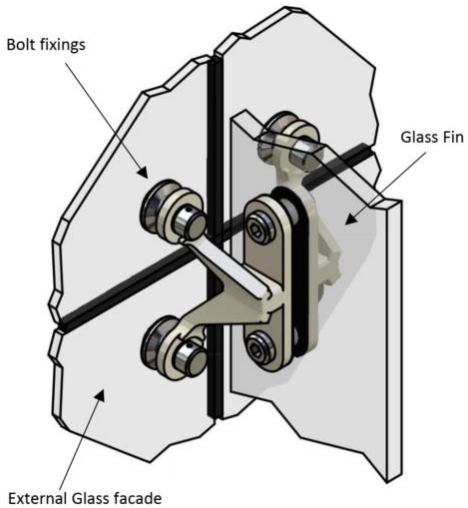

(a) Bolt fixing with fins, from (*Introduction to glass curtain wall systems*, 2019)

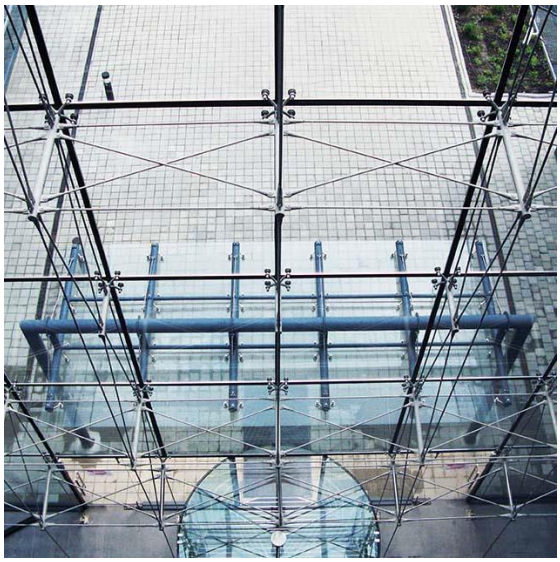

(b) Point fixing with tension cables, from www.glasscon.com

Figure A/B-42 Glass curtain wall point fixing systems

Where burning dripping of a laminate might be of concern it might be that, in certain fixing applications, the use of a channel at the bottom of the glass panel could be a mitigation measure. This approach was mentioned in the ‘laminate glass questions and answers’ posted online (Sapphire Balconies, 2020) following an event organised by Sapphire Balconies Ltd although, as the post notes, this does not affect the laminated glass classification.

A/B-27. Review of research and testing

A/B-27.1 Published academic research

Using the approach discussed in Section A/B-2, a review of the academic literature has found that although there appears to be considerable work on the application of laminated glass to buildings, in particular related to curtain wall systems. There is however little work reported on fire safety when considering reaction-to-fire and fire spread. This section summarises those studies reported in the literature that specifically investigate the performance of glass in fire with a focus on the few that have addressed laminated glass.

A/B-27.1.1 Glass breakage†

Much of the existing work on the performance of glass in fire has focused particularly on glass breakage in the event of fire and has gone on to inform the evaluation of ventilation conditions in enclosure fires (Parry et al., 2003). The research has included enclosure experiments by Skelly et al. (Skelly et al., 1991), Harada et al. (Harada et al., 2000) and Shields et al. (Shields et al., 2002). Subsequently the probability of glass fallout under heat exposure has also been explored (Wong et al., 2014), (Hietaniemi, 2005).

When a glazing system is exposed to fire a temperature gradient can develop between heated and unheated areas, for example where a frame insulates the edges of a pane of glass. This temperature gradient between the heated surface and the insulated cooler edge results in thermal stresses and has been linked to glass breakage (Keski-Rahkonen, 1988), (Sincaglia and Barnett, 1996), (Pagni and Joshi, 1991). Recent research into the connection between temperature difference and glass breakage in toughened glass has been carried out by Xie et al. (Xie et al., 2008). Their experiments investigated the performance of single panes of toughened glass when tested in an ISO 9705 fire test room. It was concluded that toughened glass resists a higher temperature difference between shaded and unshaded areas before shattering than in the case of the fracturing of conventional annealed float glass.

While glass breakage is important to understand it does not directly allow the assessment of the potential for glass to contribute to fire spread other than in the sense of fire separation.

A/B-27.1.2 Laminated glass

In 2006 Klassen et al. (Klassen et al., 2006) reported their small-scale and large-scale experiments on seven multi-layer glazing construction types and panel sizes ranging from 305 mm × 305 mm up to 1219 mm × 2438 mm. The work had a focus on radiant transmission through the glass and the breakage of the glazing. Their small-scale radiant panel experiments used exposure heat fluxes in the range of 5 to 50 kW/m^2 finding that the interlayer vaporised and eventually ignited at 30 kW/m^2 and above, once the sample

† The text is this section is mainly taken from the paper of Rickard et al., 2020

integrity was lost. In the large-scale experiments the maximum heat flux to the glazing was ~54 kW/m^2 and ignition of interlayers occurred at heat fluxes of 27.5 kW/m^2 and above.

Research carried out by Debuyser et al. (Debuyser et al., 2017) exposed laminated and monolithic glass panes to heat fluxes of 10–12 kW/m^2 for around 50 min. The laminated glass panes consisted of three layers of glass bonded with two layers of PVB or SentryGlas interlayer. The glass type is unclear, but in the absence of any information it is assumed that the glass used was conventional annealed float glass. In the experiments a heat flux was applied to the samples using a propane fuelled radiant panel, however the authors experienced issues with the experimental apparatus causing the radiant panels to cut out and the incident heat flux to reduce towards the end of each experiment. During the experiments breaking of the glass layers closest to the heat source was observed along with bubbling and discoloration of the interlayer. Bubbling of the PVB interlayer of the laminated glass panes was observed to occur at interlayer temperatures of 90 °C for PVB and 150 °C for SentryGlas. No ignition or flaming was observed for the seven laminated glass specimens used. As discussed later in this paper, the heat flux range used is below that which could be considered representative of a typical fire scenario, either from external flaming or an enclosure fire.

More recently Wang and Hu (Wang and Hu, 2019) investigated the performance of laminated glass under ‘fire conditions’. The authors exposed two 600 × 600 mm panes of laminated glass to the thermal exposure from a 500 × 500 mm square pool fire at a 750 mm standoff. The laminated glass panes consisted of two layers of 6 mm thick glass with a 0.38 mm thick PVB interlayer. Incident heat flux to the specimens was measured during the two experiments using a Gardon gauge positioned to the side of the specimen. The measured heat fluxes fluctuated between 7.7 kW/m^2 and 25 kW/m^2. The experiment with 2 kg of n-heptane fuel lasted for around 275 s with a peak heat flux of around 25 kW/m^2 and the experiment which used 4 kg of n-heptane fuel lasted around 500 s with a peak heat flux of around 22.5 kW/m^2. However, the uniformity of the thermal exposure is not quantified for either experiment. In the two experiments the glass broke and some bubbling of the PVB interlayer was observed. The exposed layer of glass in the experiment with 2 kg of fuel broke in 118 s compared to 258 s in the other experiment. No ignition or flaming was observed in the experiments. As in the case of the work by Debuyser et al. (Debuyser et al., 2017), the heat fluxes used are low compared to those which might be expected in a fire or would be experienced in standard tests.

With respect to exposing laminated glass to higher heat fluxes, while the details of the glazing are not clear, it appears that laminated toughened glass was tested by Ni et al. (Ni et al., 2012) as part of full-scale experiment being carried out to investigate the performance of double-skin glass façades in fire. The arrangement consisted of a double-glazed window with 860 mm air gap to a laminated glass external façade of two layers of 12 mm thick toughened glass with a 1.5 mm thick intervening ‘gel layer’. This gel layer is likely to have been PVB (or similar), but no details were provided. The experiment used a wood crib heat source in the enclosure with a peak HRR of 2 MW. Once the glazing of the inner skin failed the thermal exposure from the fire in the enclosure was sufficient to ignite the laminated pane of the external glazing system. It was observed that the gel layer burned and that fire spread occurred on the gel layer with glass fragments continuously

falling from the external pane. The heat flux to this external laminated glass pane was not measured or calculated. In their discussion Ni et al. (Ni et al., 2012) state that "*double glazing with an intervening gel layer cannot perform well when exposed to fire because the gel layer is easy to ignite once the exposed glass pane breaks*". It is important to consider that the experimental setup replicates a specific use of laminated glass and that the thermal exposure experienced by the external glazing system is not well quantified. The work does however raise questions about our understanding of the performance of laminated glass in fire or when subjected to representative thermal exposures.

Recent experimental work undertaken by Rickard et al. (Rickard et al., 2020) on small samples of PVB laminated glass exposed to various heat fluxes confirmed that a PVB interlayer can soften, melt, produce flammable vapours and combust. Samples exposed to significant heat flux of 50 kW/m^2 (or at least above 25 kW/m^2) can shatter and therefore when exposed to significant heat fluxes, laminated glass using a PVB interlayer can result in flaming at the glass. However, heating away from the source flame is limited and it is credible that away from the flame, combustion is limited or not taking place. There is some potential for flaming droplets from an open lower edge of the glass, but this appears to be limited in nature. It is important that these were small indicative experiments and the setup was not truly representative of any real-world use of laminated glass. While the work established that laminated toughened glass can fracture allowing the interlayer to burn it was not possible within the scope of that work to assess if fire spread remote from the external heat source is possible. An experimental setup to allow a preliminary assessment of this is currently being designed and further scoping work is planned at The University of Edinburgh.

A/B-27.1.3 Film-backed glass

So far only the work by Mowrer (Mowrer, 1998) on the use of wind-resistant film-backed laminated glass under fire exposure conditions has been reviewed. There may be other research on this topic within the literature, but this has yet to be identified. In the work of Mowrer, the backing a single pane of plate glass with a thermoplastic film doubled the breakage performance. However, the film also softened and delaminated away from the glass which meant it was unlikely to hold the glass in place post-fracture.

A/B-27.2 Industry-led fire safety experiments on laminated glass

The authors of this report are aware that there might be unpublished work which has been carried out by members of the glass industry and have seen some videos of ad-hoc furnace tests with a view to demonstrating the acceptability of laminated glass for use in balcony balustrades. It is possible that there is industry-lead work which has not been reviewed as part of this study, however it is hoped that through communications with the Glass and Glazing Federation, and others in industry, that the authors have gained sufficient appreciation of the current status of the industry research. It is understood that if there are other unpublished industry studies then they are likely to be (or have been) presented to MHCLG, however if that is the case they have not been provided to the authors of this

report at the time of writing, with the exception of the report discussed in Section A/B-27.2.1 below.

A/B-27.2.1 Glass and Glazing Federation report

During the course of the review of the literature the Glass and Glazing Federation, GGF, finalised a series of twelve furnace tests on different laminated glass balustrades and produced a report which the authors have seen, but which has not been published. The work presented included both experiments and numerical analysis.

The GGF experiments made use of fire testing furnaces, similar to those typically be used for fire resistance testing (Section A/B-28.2), and exposed various types of laminated glasses to the external fire exposure standard fire resistance time-temperature curve. The samples used were 1450 × 1100 mm and supported by balcony balustrades fixing at an opening in the furnace. Observations were made as to the time to failure of the laminated glass units and if flaming was seen to occur. The work does not investigate the potential for fire spread involving laminated glass remote from the heat source. It is unclear if this report will be made publicly available and the results are not reported in detail here due to the current draft and confidential status of the report.

It is the view of the authors of this report that while the GGF report provides some useful indication of the behaviour of different laminated glass assemblies when exposed to a standard fire temperature time curve, it is not possible to use the results to conclusively assess whether there is potential for laminated glass to contribute to fire spread.

A/B-27.2.2 Sapphire Balconies report

One piece of work that has been published is a demonstration test carried out by Sapphire Balconies Ltd (Haughton, 2020) in which a ‘worst-case’ ignition scenario was conducted. Full details of the demonstration are not repeated herein but the outcome was that samples of PVB laminated glass showed little damage whereas a sample of monolithic glass completely broke at 6½ minutes after ignition. It would appear that no burning of the PVB laminate was observed. Sapphire also report some ad-hoc bench-scale investigations of the propensity of PVB and EVA to drip when locally heated by a pilot flame. Both materials were able to burn and the PVB dripped more than the EVA. A version of the Sapphire study was also included in the GGF report discussed in Section A/B-27.2.1.

As discussed in Section A/B-28.2, it is important to note the difference between the performance of glass acting as a fire resisting barrier in tests designed to replicate a fully developed compartment fire, and the performance of glass when considering the potential for it to promote fire spread remote from the compartment of fire origin. While there will be useful observations from such work, it is unclear to what extent the potential for fire spread could be evaluated from these experiments. Section A/B-28.6 provides some diagrams and discussion of the fire safety issue.

A/B-27.3 Summary of existing research

Based on the publicly available research reviewed, it is the view of the authors that there is a lack of available research relating to the behaviour of laminated glass under thermal exposures which may occur in fires. Prior to the experimental work carried out previously by the authors of this report (Rickard et al., 2020) it was unclear how laminated glass might perform when subjected to heat fluxes which may be experienced in a fire and the authors do not know of any other research which has been carried out in such a controlled manner to directly investigate the behaviour of laminated glass.

As has been the case with respect to industry-led testing programmes which have been carried out to support the use of laminated glass on balconies, see Section A/B-27.2, it is possible that there is a wealth of knowledge that has been accrued by the industry, but which is not widely available within the public domain. What the available research does show is that the interlayer in laminated glass has the potential to ignite and burn although at this stage there is very little evidence to assess to what extent this could contribute to fire spread and therefore its significance in overall building performance is uncertain.

A/B-28. Fire safety considerations

A/B-28.1 Introduction

The main risks associated with laminated glazing elements when applied to the outside of a building need to be characterized in the context of their application. Issues that should be considered (among others) are the potential for the ignition and burning of the interlayer, the generation of burning droplets, failure inducing participation of the laminated glazing in fire spread, and the falling of glass on occupants exiting the building and/or firefighters during their operations.

On the other hand, there may also be specific benefits for the use of laminated glass particularly as a fire separation. This separation may be in the form of a 'fire resistance' function (see Section A/B-28.2) but, as noted in Nguyen et al. (Nguyen et al., 2016), in the context of windows or facades, since laminated glass may prevent glass fall-out it may limit fire spread to other floors when compared with single pane glazing.

While much research and development has been carried out to develop fire resisting laminated glass products there is an apparent knowledge gap surrounding the performance of laminated glass with respect to external fire spread. The following sections provide some high-level discussion of the existing testing and classification framework and describe the perceived external fire spread issue in more detail, both in terms of the potential behaviour and how it could be assessed.

A/B-28.2 Fire separation and fire resistance testing

As discussed in Section A/B-24.2.3, fire resistant glass was first developed around the 1970s and it is understood from industry engagement that the products used today are very similar to these which were initially developed. Fire resistant laminated glass makes use of different glass layers and interlayers (see Section A/B-26) in order to achieve the desired performance goals with respect to fire separation.

In addition to the fire resistance performance criteria discussed in Section A/B-3.4, an additional one relevant to laminated glass in this type of use is specified. This is radiation (W) which assesses the ability of the element of construction to withstand fire exposure on one side only, so as to reduce the probability of the transmission of fire as a result of significant radiated heat either through the element or from its unexposed surface to adjacent materials. The ability of a glazed door or window to achieve the insulation, integrity and radiation criteria allows the use of glass in fire doors and in other fire safety solutions such as protection of escape routes and / or reduction of thermal exposures to neighbouring buildings or other areas of the same building. The use of glass as a structural element, able to achieve a load bearing fire resistance, R, has been explored by researchers (Bedon, 2017) with limited success, but such an application may be a possibility in future.

While these performance criteria provide useful insight into the behaviour of glass when subjected to the thermal exposures of a fully developed compartment fire, the results of a furnace test provide limited information which could be used to assess the potential for fire spread involving laminated glass. As such, a number of elements are not addressed including:

- the burning of any laminate interlayer on the inside of a test enclosure,
- vertical fire spread away from the heat exposure source,
- the possibility of laminate dripping is not considered, and
- any falling hazards from the failure of the exposed glass face.

This is not a direct criticism of the furnace test per se, but simply that laminated glass being tested in a furnace is being assessed for a particular purpose in which these factors are not relevant.

A/B-28.3 Euroclass assessments

The authors of this study are aware of a research programme carried out in 2013 (Niazy, n.d.) on behalf of London Underground Limited (LUL) on fire performance testing of laminated glasses with a PVB and a SentryGlas interlayer. The available information on this work is limited. The laminated glass sample with the SentryGlas interlayer had two 8 mm thick toughened glass layers and a 1.52 mm thick interlayer but details of the PVB sample are unknown. Two separate tests to BS 6853 ‘Code of practice for fire precautions in the design and construction of passenger carrying trains’ were conducted in relation to toxicity and ‘fume’ density. A test to BS EN 13823 was also carried out in which a classification of Euroclass B-s1, d0 was achieved according to BS EN 13501-01. It is understood that this work has led to a revision to ‘G085 Code of practice - Fire safety of materials and fire safety of specific items and materials used in the underground’ in which the use of the SentryGlas laminate was approved, although the authors of this study have only sighted a copy of this document that pre-dates the test programme. It is the current understanding of the authors of this study that LUL has sought framing around laminated glass to mitigate flame contact with and dripping of the interlayer. However, the latest platform screen doors are not framed, and this was accepted via a comprehensive risk assessment approach. It is also possible that there are areas across the Network Rail system where laminated glass is used unframed and acting as a wall although this aspect has not been investigated in this study to date.

Also, around 2013 as a response to EU Construction Product Regulation 305/2011, work on the reaction to fire performance and the classification of laminated glass to BS EN 13501-1 was commissioned by the glass industry through Glass for Europe (Glass for Europe, 2015). The work included an assessment of the BS EN 13823 SBI test as a method to obtain a classification, and the application of the ISO 9705 test to represent a more realistic application of glass in construction. The SBI tests included laminated glasses with different glass thicknesses, different laminate thicknesses and different laminate types (PVB, EVA, PC/PU, PVB/PET) in which the there was a linear correlation in performance with the change in laminate thickness where PVB was used. The tests achieved

Euroclass B for the thinner laminate thicknesses, increasing up to Euroclass D where the laminate thickness was increased, and the glass was thinner. Furthermore, the tests showed that the type of interlayer had little influence on the results. Despite obtaining classifications, the Glass for Europe report notes that industry believes that the use of BS EN 13823 is not an appropriate test method due to the arrangement of the glass sample and the enclosed nature of the apparatus. In the ISO 9705 tests a laminated glass wall was constructed with glass of two layers of 4 mm thick glass and a 1.56 mm thick PVB interlayer in order to demonstrate that once the glass breaks heat and smoke would be released thus representing a real-world application. From this work the glass industry therefore recommends that laminated glass and insulating glass be indicated with "No Performance Declared, NPD" as the declaration of performance. The Glass for Europe document recognises that without the need for testing, based on the gross calorific potential (PCS) per square metre, all laminated glass products are Euroclass B or lower and may never be classed as A2.

Both the LUL and Glass for Europe studies point towards laminated glass with a PVB interlayer as having a Euroclass B classification at best and thus the product does not meet the requirements given by Regulation 7 in which Euroclass A2-s1, d0 or A1 must be achieved. It is noteworthy that in addition to LUL using laminated glass, it is understood from discussions with a senior engineer within the NHS, that there is currently no concern about the use of laminated glass within the healthcare sector.

In a set of ‘laminate glass questions and answers’ posted online following an event organised by Sapphire Balconies Ltd (Sapphire Balconies, 2020) it was noted that there is “*little appetite from the laminate providers*” to supply a product that will comply with Regulation 7. This statement somewhat corresponds to discussions within the industry that suggested laminate providers have tried but been unable to create a complying product. However, more recently the authors of this report have been made aware of a balcony balustrade supplier that uses laminated glass that uses a gel layer that is claimed to achieve Euroclass A2-s1, d0 for a product with a single interlayer between two glass layers. Discussions with the supplier suggest that the glass panels are thicker than typically used currently and require an edge-capping. There is a limited capacity to supply large volumes to the market and the cost of the product is around four times that of products used for similar balustrade applications.

A/B-28.4 Modern laminated glass

From meetings with stakeholders and experts in the laminated glass industry as part of this work, similar to the statement made by Razwick (Razwick, 1999), there appears to be a consensus that laminated glass should not be viewed as a single material, but rather a family of materials which have different attributes and perform differently. Within this family of materials there are materials which have been optimised for different scenarios and would perform differently, both in the existing ambient tests and theoretically in any fire tests. However, the Glass for Europe study discussed in Section A/B-28.3 noted that the interlayer type had little influence on results.

The glass type and quality, along with the interlayer material, and the thickness of both would all be considered to be potential influencing factors when assessing the performance of a laminated glass panel. To refer to all of the products simply as 'laminated glass' is deemed an oversimplification. However, there is currently no fully established test methodology or classification system which would allow the quantification of the reported differences in performance of these products with respect to fire performance and particularly fire spread. Despite this, those in the laminated glass industry are vocal that the current laminated glass products used for balconies, in their view, do not increase the risk of fire spread or contribute to fire load. For example, in an industry survey conducted by Sapphire Balconies Ltd (Haughton, 2020) there was very strong support for the ban on the use of laminated glass in balcony balustrades to be lifted and support for the view that the product is safer than monolithic glass.

Theoretically if it was demonstrated that the current laminated glass products are appropriate for use on balconies it is important to note that laminated glass products are being developed continuously and may change further over time. Development is driven by the demands of society, for example that could be to realise ambitious architectural visions, provide increased security, address solar gain issues, or serve multiple purposes such as acting as both a façade / window and a solar panel generating electricity for the building (AGC Glass, n.d.; Onyx Solar, 2011; Traverse et al., 2017).

The current lack of a methodology for characterising the reaction-to-fire performance of laminated glass with respect to fire spread means that, as the material is developed over time, there is no benchmark against which to assess performance. As a result, confidence in the relative performance of both existing and future products is limited.

A/B-28.5 Fire incidents

A/B-28.5.1 Statistical information

One approach to gauge the potential hazard presented by fire spread involving laminated glass is to examine fire statistics and also to investigate any specific incidents that have occurred. As already noted in Section A/B-2, the various datasets that have been searched do not provide specific fields with regard to laminated glass.

A request for information was sent to all fire & rescue services (FRS) via their '*Protection and Fire Investigation*' forums in November 2020. This was followed up with an NFCC communications update to all FRSs. At the time of writing, no reports of any incidents have been received where laminated glazing may have contributed to external fire spread. Further to this, informal discussions with a past operational member of a large urban FRS found that they had never observed any fires involving laminated glazing.

However, in a recent report published by Sapphire Balconies Ltd (Haughton, 2020) four fire incidents were identified in which laminated glass was installed as a balcony balustrade. One fire is described as 'minor' in which the glass appeared to be undamaged. Two fires are described as 'moderate' in which it was reported that fire-fighters broke a panel to control the fire in one incident. In the final incident, a full stack of balconies was involved and only the structural steel remained afterwards. Another multiple balcony fire in West

Hampstead is also briefly mentioned (see Section A/B-11.1) although the mechanism of fire spread is unclear at this point, and reference is also made to the balcony fire in Manchester on 24th May 2020. The Sapphire report also reports 19 incidents in which monolithic glass was used in the balustrade in which "*most often the glass explodes and showers the ground below*" (Haughton, 2020).

In the review of 59 tall building façade fire incidents (Spearpoint et al., 2019) none were identified as having laminated glass contribute to the spread of fire. Similarity, in the review of 13 façade fire incidents by Nguyen et al. (Nguyen et al., 2016) (noting that several were the same as those in Spearpoint et al.) none mentioned laminated glass. This might suggest that there have been no cases (of significance, at least) but care should be exercised making a definitive statement to this effect.

A/B-28.5.2 Qualitative review of balcony fire incidents

During the finalisation of this report a qualitative review of fires involving balcony balustrades has been published (Binte Mohd Faudzi et al., 2021). This section discussing the new paper has been added for completeness.

In their review the authors highlight some of the research discussed here in Section A/B-27.1 where laminated glass was exposed to low heat fluxes below what could be expected from external flaming. Following this the authors report on six balcony fires, two of which were believed to have laminated glass balustrades. It is assumed that some of these cross over with the 23 case studies mentioned by Sapphire Balconies (Haughton, 2020) however Sapphire Balconies did not go into detail for each example.

The qualitative review (Binte Mohd Faudzi et al., 2021) aims to assess the potential for laminated glass balustrades to contribute to fire spread by reviewing post fire photographs. In this review it was considered that laminated glass can be identified in post fire photographs using the following criteria: *"Large fragments remain fixed on the frame*" and *"Visible loss of transparency due to delamination and bubbling of interlayer"*. Whether these criteria on post fire appearance could apply to all balcony fires and support systems is unclear, particularly considering that all or most of interlayer could be lost during heating.

It is noteworthy that Sapphire Balconies considered the balustrade of the balcony balustrade of the Orwell Building in West Hampstead to be laminated glass whereas the authors of this qualitative review consider this to be monolithic referencing also that, in addition to their criteria for post fire laminated glass not being met, the London fire brigade report (London Fire Brigade, 2019) stated the balcony balustrades consisted of "*toughened balustrade glazing*". It is unclear what this means as both laminated and monolithic glass would be toughened in this application. It has not been confirmed which authors were correct in their assessment, but it is suggested that care should be taken drawing conclusions on both material type and material behaviour from post fire photographs. It is also noted that important parameters such as interlayer type and thickness or glass thickness cannot easily be determined from photographs.

Of particular relevance for this work the authors of the qualitative review conclude that: *"This study has shown from an analysis of past fire incidents that there is no correlation*

between the use of laminated glass and the incidence of fire spread from the balcony of origin. No evidence was found from our study that laminated glass as balcony balustrade has any significant contribution to fire spread that would warrant a ban on its use. Therefore, the application of laminated glass as balcony balustrade does not pose a risk in terms of external fire spread."

It is the view of the authors of this report that, given that this qualitative review only identified (correctly or incorrectly) two laminated glass balustrade case studies, with unknown laminated glass build ups, the strong conclusions should be treated with caution. It may be the case that balcony balustrades do not pose a significant risk with respect to fire spread. However, given that laminated glass has been observed to fail and the interlayer burn at credible heat fluxes in the range that could be expected to occur in external flaming (Rickard et al., 2020) and in work by others (Ni et al., 2012), the potential for contribution to fire spread should be assessed further.

A/B-28.6 Understanding external fire spread involving laminated glass

Understanding the role of laminated glass in external fire spread requires first separation of the two specific aspects of fire performance that are commonly assessed: laminated glass as a barrier and laminated glass as a means to promote external fire spread. These are two different problems with very different characteristics.

It is also important to be able to separate statements that mix both issues, statements that have no substantial technical backing and statements that are the result of sound technical analysis. It is therefore apparent that misconceptions around the role of laminated glass and fire safety need to be directly addressed.

As a final note of caution, often laminated glass is discussed in the context of other products, adding to the confusion. For example, as part of the discussion on the hazards posed by the use of wired safety glass (Lane, 2014) it is claimed, without any supporting evidence, that

> *Laminated glass is incapable of performing this role* [of acting as a fire-rated glass] *because the plastic laminate itself is flammable and can actually worsen fires*

The quote above can be used as an example of the complex levels of confusion. Fire rated glass is classified on the basis of providing a quantifiable level of 'fire resistance.' Many materials with combustible cores can deliver 'fire resistance' as a function of their design and components. Nevertheless, in this case the statement relates to the potential for laminated glass to contribute to the fire when exposed to compartment fires. This is not directly related to 'fire resistance' nor is it necessary relevant when considering the other elements of fire load. Furthermore, this is not the primary concern when considering the potentials for external fire spread.

In order to assess the potential for external fire spread involving laminated glass it is necessary to first consider the behaviour of the system when exposed to a heat insult. It is essential to understand the potential failure modes and the mechanisms by which the

combustible components will contribute to fire spread. It is the understanding of the failure modes that will enable the definition of the type of solicitations that could lead to fire spread supported by the laminated glass. It is then important to conceptualize the possible fire events and how they will impact, in a quantitative manner, the laminated glass. For example, Figure A/B-43 provides a series of seven diagrams showing potential fire spread events involving laminated glass balustrades and a description of the considerations in each instance. For clarity the first five focus on fire spread upwards to a balcony above, the sixth shows the potential scenario where a fire spreads out onto a balustrade on the fire floor. The final diagram shows the other credible case of a fire originating on a balcony. Similar considerations would apply for laminated glass in different scenarios. The quantitative intersection of the failure conditions and the potential scenarios can then be used to establish under which scenarios laminated glass can contribute to or support the spread of fire.

Currently, neither the failure mode exercise or the assessment of these scenarios (or any other relevant ones) has been conducted through a systematic study. Therefore, it is not known whether these events will result in fire spread with the current types of laminated glass and balcony arrangements, but any attempts to assess the potential for fire spread should consider this approach. As illustrated in Figure A/B-43, the potential for fire spread remote from a compartment fire cannot easily be understood through furnace testing.

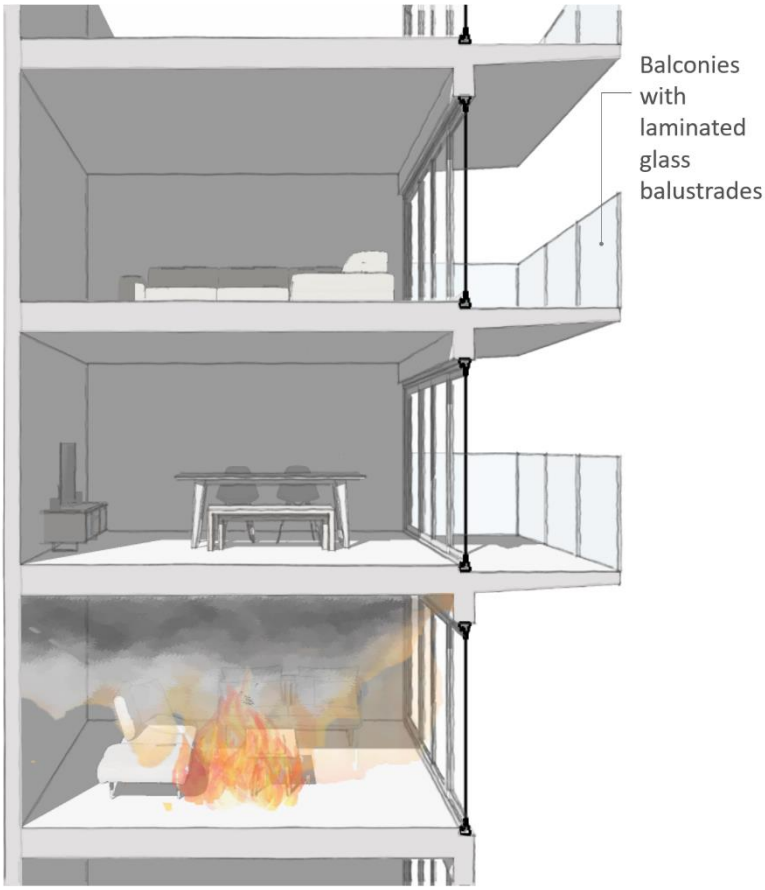

1. Compartment fire in a building

Furnace tests, while they do not replicate ‘real fires’, were designed to allow a conservative test for benchmarking performance of an element of construction when subjected to compartment fires.

In this instance the performance of the glass window/door with respect to its integrity, E, and insulation, I, ratings could be assessed with a furnace test. Providing an indication as to if the glass might fail as a result of the fire.

Furnace tests offer a pass / fail benchmark (with rating expressed as a time) and provide limited understanding of the material / product behaviour in fire.

While the example shown here is a fire in a flat with no balcony the fire could occur in an upper floor apartment with its own balcony.

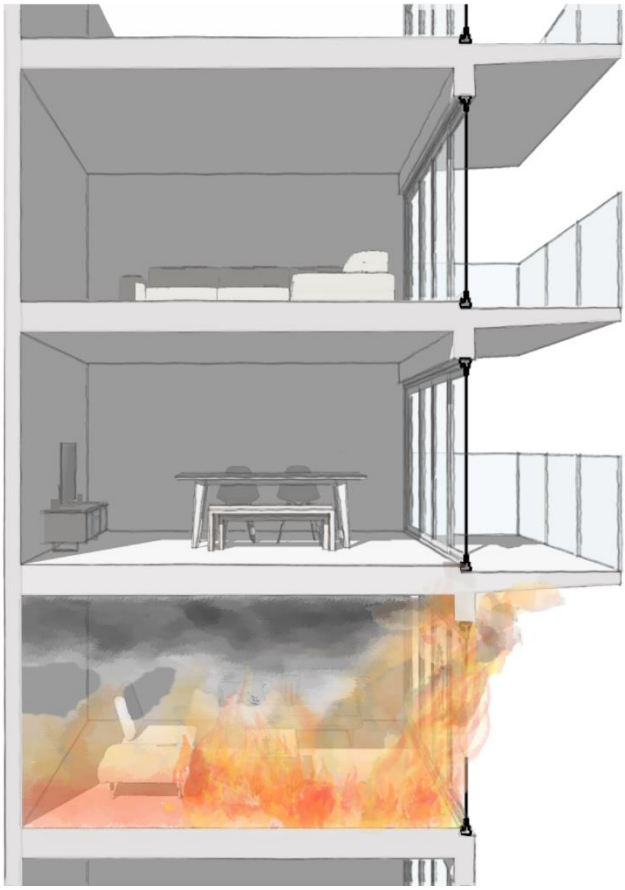	**2. Failure of the external wall /glazing** External flaming from the compartment is possible in this scenario. These flames may be deflected under the balcony. Depending on the fire in the compartment, the geometry of the opening, and the arrangement of the balcony, the flame extension may be limited to the underside of the balcony. This scenario could involve different configurations such as where the window and balcony are not in line vertically.
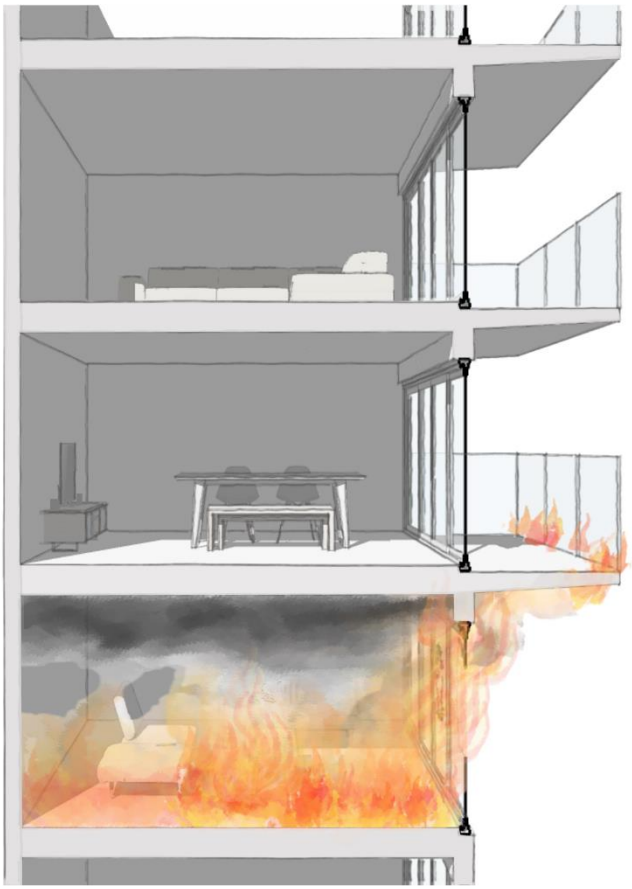	**3. Ignition of the balustrade** In order to understand the potential for a balustrade to ignite, the critical heat flux for ignition of the balustrade is a key parameter. Characterisation of the ignition conditions is necessary, and this is likely to require an understanding of cracking and behaviour of the glazing system to be understood in greater detail.

	4. Fire growth and fire spread on balcony If the balustrade ignites there is potential for this flaming to be sustained and fire spread to occur beyond the area heated by the compartment fire. The flaming may be sufficient to cause vertical or horizontal fire spread. Again, critical heat flux for ignition of the balustrade is desirable.
	5. Continued flame spread remote from compartment Flame spread and fire growth remote from the original compartment fire. There is potential for the fire to enter the building remote from the original compartment. Breaching compartmentation and potentially compromising the fire strategy. There is also potential for burning droplets. Which could cause ignitions below the balustrade.

	6. Compartment fire on floor with a balcony In the case of a fire occurring in a compartment with a balcony there is the possibility that the balcony could ignite from thermal radiation transmitted through windows in addition to the potential external flaming mentioned previously. This would be the most likely scenario with respect to fire spread out from a compartment fire but would not necessarily result in vertical fire spread. After ignition of the balustrade, the considerations would be similar to the previous scenario.
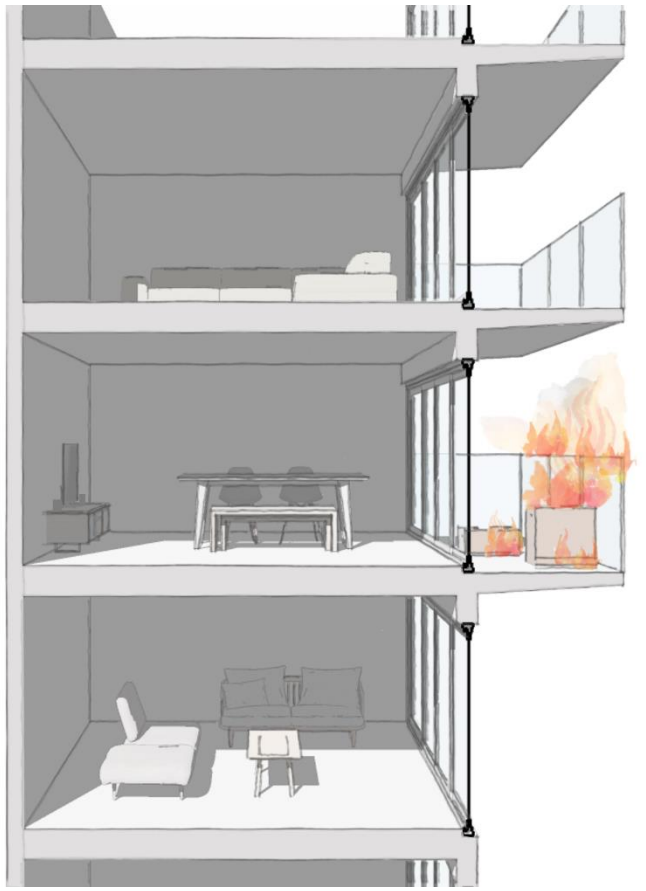	**7. Fire originating on the balcony** As has been identified in Part A of this document there are often items stored on balconies and building occupants have been reported using balconies for barbeques. The presence of fuel load introduces the potential for a fire to originate on the balcony and grow to involve the balustrade.

Figure A/B-43 Potential fire spread events for laminated glass used as a balcony balustrade

A/B-29. Conclusions

This part of the report sets out the first stage to aid MHCLG to consider whether changes to the guidance in AD B and/or changes to Regulation 7 are warranted in relation to the use of laminated glass in the construction of buildings.

National statistics that identify fires in which laminated glass was present and made any contribution to an incident are not available. A review has not revealed a great number of specific fire incidents in which laminated glass (in any configuration) was observed and although there are some fire incidents where laminated glass was present, it did not appear to have contributed to the fire to any great extent. A discussion on relevant fire incidents will be developed as the project progresses should more information come to light. However, based on the current findings, it would suggest that relevant incidents are relatively rare. This does not say that the situation could not change in the future and this care must be taken using historical data to project into the future.

Research in the form of experiments and standard testing of the performance of laminated glass in fire has been reviewed. In general, the research has been focussed on the fire resistance of laminated glass and very little has examined whether fire spread might pose a hazard. Given that available experimental data is insufficient for the purpose of defining the desired fire spread performance objectives, a series of relatively small-scale experiments separate from this project is already being developed partly building on recent previous work (Rickard et al., 2020). It is expected that these experiments will allow for some further assessment of the potential behaviour of laminated glass. The intention is that results from these separate experiments, coupled with further review of guidance and detailing relating to installations, will allow a more comprehensive assessment of the potential hazard posed by laminated glass.

This part of the report particularly addresses the use of laminated glass as a balcony (or terrace) balustrade since this building element is substantially impacted by the current requirements of Regulation 7 and is of particular interest to industry. From the review of information and discussions with industry it is apparent that laminated glass is usually selected for balustrades, in part, for the increased level safety which is provided over monolithic toughened glass at ambient temperatures. Laminated glass used for this application predominantly uses PVB as the interlayer material where available data shows that it is apparent that PVB and laminated glass with a PVB interlayer can support combustion.

Thus, the fire spread hazard from laminated glazing when used in typical applications cannot be ascertained to be acceptable nor unacceptable from the limited information available to date. It is quite possible that the fire risk posed by laminated glass is acceptable given the relatively few cases and the apparent lack of impact on the development of those incidents. However, rather than relying on historical data to define the fire risk posed by laminated glass, it is preferable to provide a means to assess this risk

through some form of procedure, whether that be physical testing, computational methods, industry guidance and good practice, or some combination of these. This would not only allow the adequacy of currently used construction methods to be investigated but would also provide a means to check that future methods do not unnecessarily increase the risk.

There is a range of policy options for use of laminated glass in buildings. Just focusing on a balustrade application on the external walls of a building these could include:

- Maintaining the status quo with respect to the (lack of any specific) guidance in AD B and the scope of Regulation 7,
- Including laminated glass in a balcony and/or terrace balustrade as an exemption in relevant buildings,
- Extending the ban to include additional relevant buildings to those currently listed in the Building Regulations, or
- Providing additional guidance on what types of laminated glass and in what arrangement it would be acceptable to use.

Consideration needs to be made that banning laminated glass from balcony or terrace balustrades but allowing monolithic glass will likely increase the frequency of incidents of breakage and falling glass. A ban on using glass of any type may introduce negative impacts on the utility of a building regarding the mitigation of wind, and the restriction of sightlines to sections of the population. However, there are similar options (with sometimes far-reaching impacts) when it comes to the use of laminated glass in windows and in curtain walls

One of the next tasks in this project is to consider whether it is possible to develop an assessment regime for the performance of laminated glass with respect to fire spread. This regime will likely build on previous work that also accounts for the various common standard test methods, but it may require additional physical tests along with one or more design procedures.

As this study moves on to the next stages it is important to further understand how the glazing is defined in terms of panes, frames and supporting structures within the design and construction industry so as to ensure that guidance is unambiguous, helpful in aiding comprehension of the problem and solution as well as being robust with regards to deliberate misinterpretation.

Part D : Recommendations

A/B-30. Further work

This section provides a number of recommendations for further work resulting from the findings given in this report. Recommendations include the need for small- and large-scale tests that can be complimented by the use of computational methods. Consideration should include the use of detailed computational fluid dynamics (CFD) and/or finite element analysis (FEA) modelling but also how other methods such as risk-based assessment using probabilistic tools could be beneficial to the project goals.

A/B-30.1 Balconies

Several areas for further work directly related to balconies have already been discussed in Section A/B-15, in summary they are:

- To consider whether it is allowing a limited proportion of a balcony to be combustible could be achieved without compromising the ability of a building to meet the functional fire safety requirements of the Building Regulations. This may inform whether future flexibility can be considered for the inclusion of certain combustible materials as part of a balcony or alternatively whether additional restrictions should be placed on buildings other than those already covered by Regulation 7.

- To assess how to limit the risk of fire penetrations at compartment floor level through balcony/building connections.

- The study has concluded that it is unrealistic to expect balconies to be free from combustible items that have been introduced by building occupants. This is particularly the case for private and communal areas. There is no guidance in AD B on what fire load should be applied to balconies and this would appear to be a gap in addressing what has become a viable hazard in modern buildings. The next stage of the project should carry out a survey of fire loads on balconies including total fuel load, fuel types and arrangements, which will lead to the creation of a representative design fire appropriate to balconies. This will then enable the consortium to review various parameters where a lack of information available was identified during the initial phases of this research project. This includes the absence of fire rating (REI) of private balconies, the percentage of opening defining a balcony as open, whether the restrictions in terms of combustibility of the balcony components set by the amended Regulations are sufficient to limit the risk of external fire spread, etc.; and

- The scoping study has identified that a British Standard (BS 8579) on 'Guide to the design of balconies and terraces' has been published in 2020. The difference in publication dates between the standard and AD B means there is no reference to this standard in the current edition of the statutory guidance. Given it would appear that this standard is gaining broad acceptance across the construction industry in England, consideration should be made to either adopt fully BS 8579 within AD B or make reference to the relevant fire safety clauses within the standard.

A/B-30.2 Spandrels

It is intended that a proposed experimental programme will allow quantification of the current 'policy position' that is represented within Approved Document B with regard to the delay associated with floor-to-floor fire spread. To specifically address the questions posed in Section A/B-21 regarding spandrel / in-fill panels, it is recommended that:

- The key typologies of construction are defined from which external walls are commonly constructed.
- A large-scale test programme is undertaken to investigate the delay period and tenability conditions associated with these key typologies – thus allowing the delay periods to be defined.
- Criteria should be defined associated with:
  - the loss of tenability prior to fire spread (e.g. due to unseen spread of combustion products),
  - the breach of an adjacent unit by flames or combustion products, and
  - the need to alert occupants of upper stories.
- The role of the fire and rescue services is assessed and whether fire-fighting provisions are commensurate with this role.

A/B-30.3 Laminated glass

The study has identified there is a range of laminated glass products on the market that differ in thickness, interlayer material and glass type. Other than the specific requirements set out in Regulation 7, there is no guidance within AD B on the acceptability of using these products for different applications within buildings, whether that be as a balustrade, a window, a curtain wall, or any other application. The next stage of the work should generate further knowledge on the contribution of laminated glass to the development of a fire, and in particular fire spread. This work should consist of the following tasks:

- The development of an appropriate physical testing arrangement at small / medium scale to assess the potential for the ignition and fire spread via flame impingement associated with laminated glass when configured as a wall or balustrade. This work will extend the findings already generated by the previous research identified in this study and also the recent work undertaken on behalf of the Scottish Government. The work will allow different laminated glass products to be compared as well as

providing knowledge that can be applied to any future design methodology or acceptance criteria.

- There is currently no guidance either directly within AD B or cited in AD B relating to the potential for different fixing methods for laminated glass to influence flame spread. Dripping of interlayer is expected to be a hazard, investigation of dripping should be in addition to the investigation of fire spread via flame impingement, discussed above. Investigation needs to be carried out on the possibility of specifying balcony fixing arrangements that could mitigate the potential for fire spread via dripping of the interlayer in laminated glass. Where possible, this mechanism should be included as part of the already mentioned physical testing. An alternative approach would be to assess whether materials that achieve a d0 BS EN 13501-1 classification are sufficient to address balcony balustrade fire spread even where the material otherwise achieves class B.

- On completion of the small / medium scale work the project should assess whether there would be benefit in conducting a limited number of full-scale demonstrations to show how the knowledge gained from the earlier work can be applied. These full-scale demonstrations could be in the form of a modified BS 8414 type test on laminated glass wall configurations that illustrate how fire could develop over a contiguous surface. Should these demonstrations show that fire does not spread then this would provide valuable. The full-scale demonstrations could be incorporated within the experimental work for the balcony aspect of this study, or as part of the separate external wall systems project also being carried out on behalf of MHCLG.

A/B-30.4 Combination of elements

In addition to the specific findings associated with balconies, spandrels and laminated glass as separate elements within a building, this study recognises that these present fire safety considerations when used in combination. The guidance within AD B does not address the inter-connected nature of the building elements and therefore the following tasks should be carried out:

- This scoping study has identified that the use of laminated glass as a balcony balustrade addresses a range of objectives that include structural failure, glass breaking hazards, the impacts on wind mitigation, and sightlines. A study should be carried to assess the cost-benefit of using laminated glass with respect to these objectives when compared to the fire safety risk that might be posed. The outcome of the work will aid quantified decision making around any accepted risk. At present a cost-benefit analysis appears to fall outside of the scope of the current project.

- The work so far has identified that, apart from laminated glass balustrades, there appears to be acceptance and willingness in industry to use non-combustible balconies. The impact of requiring that all elements that make up balconies and spandrel zones be non-combustible irrespective of the building height and occupancy classification should be considered and could form part of the overall external fire spread mitigations on all buildings. In other words, extending the

existing ban to external walls beyond those buildings that are currently covered by Regulation 7 should be assessed.

- Following the experimental and survey work which has been proposed the authors anticipate that it may be appropriate to develop a balcony fire spread design method which could be used to update the provisions within AD B. This methodology would consider aspects resulting from the other work discussed above such as balcony construction, representative fire loads, balustrade materials, etc. The method would consider balconies not just from a hazard perspective but also as a mitigation measure such as when assessing flame projection away from a wall.

A/B-31. References

Advice Note 14, Advice for building owners on external wall systems that do not incorporate Aluminium Composite Material, 2018. London.

Advice Note 19, Advice for owners of buildings which include spandrel panels/window panels/infill panels, 2018. London.

AGC Glass, n.d. Glazing that generates renewable energy. www.agc-glass.eu/en/news/story/glazing-generates-renewable-energy (accessed 11.6.20).

Anthony, J.W., Bideaux, R.A., Bladh, K.W., Nichols, M.C., 2004. Handbook of Mineralogy. Mineralogical Society of America, Chantilly, VA.

Approved Document B - Volume 1: Dwellings, 2019. HM Government.

Ashton, L.A., Malhotra, H.L., 1964. Technical study: Curtain Walling and Fire Protection. The Architects' Journal 140, 1059–1064.

Ashton, L.A., Malhotra, H.L., 1960. Fire Research Note 436. External Walls of Buildings - Part I. The Protection of Openings against Spread of Fire from Storey to Storey. Boreham Wood.

BA Systems, n.d. Comparing the 2 main glass interlayers: PVB v SG. BA Systems. www.basystems.co.uk/blog/2019/07/comparing-glass-interlayers/ (accessed 11.6.20).

Balconette, 2020. Balconies through the ages. https://www.balconette.co.uk/juliet-balcony/articles/balconies-through-the-ages (accessed 12.6.20).

Bauhaus Dessau Foundation, n.d. Dessau-Törten Housing Estate: Houses with Balcony Access (1929–30). URL www.bauhaus-dessau.de/en/architecture/bauhaus-buildings-in-dessau/houses-with-balcony-access.html (accessed 12.10.20).

BBC, 2017. Manchester flats fire: Three treated after blaze . BBC News. https://www.bbc.com/news/uk-england-manchester-42524546 (accessed 11.10.20).

BBC, 2015. Wigan flats fire: Sixty homes destroyed in blaze. https://www.bbc.com/news/uk-england-manchester-33131677

Bedon, C., 2017. Structural glass systems under fire: Overview of design issues, experimental research, and developments. Advances in Civil Engineering. doi: 10.1155/2017/2120570

Beers, P.E., Pilcher, M.A., Sciaudone, J.C., 2002. Retrofitting commercial structures with laminated glass to withstand hurricane effects, in: Block, V.L. (Ed.), The Use of Glass in Buildings. ASTM International.

Bensilum, M., 2001a. DTLR Building Regulations Division Project Report: A survey of available information on incidents of flame spread through windows. Garston.

Bensilum, M., 2001b. DTLR Building Regulations Division Project Report: A review of codes and standards relating to fire spread through windows. Garston.

Binte Mohd Faudzi, F., Schulz, J., Dodd, G., 2021. Qualitative assessment of fire hazard posed by laminated glass balcony balustrades on fire spread. Fire Technol. doi: 10.1007/s10694-020-01085-8

Blanchard, Z., 2019. Use of glass in handrails & guards. Code Red Consultants. https://coderedconsultants.com/insights/use-of-glass-in-handrails/ (accessed 11.3.20).

Bowley, M., 1966a. The British Building Industry. Cambridge University Press, Cambridge.

Bowley, M., 1966b. The British Building Industry. Cambridge University Press, Cambridge.

Brookes, A.J., Meijs, M., 2008. Cladding of Buildings, 4th ed. Taylor & Francis, Abingdon.

Building Standards (Scotland) Regulations 1963.

Burgess-Wise, D., 2001. A good idea at the time: Safety motor screen. The Telegraph. www.telegraph.co.uk/motoring/4754191/A-good-idea-at-the-time-Safety-Motor-Screen.html (accessed 11.6.20).

Butcher, E.G., Parnell, A.C., 1983. Designing for fire safety. John Wiley and Sons.

Button, D., Pye, B., 1993. Glass in Building, First Edition. ed. Butterworth Architecture, Oxford.

Cath Crook, 2001. DTLR Building Regulations Division Project Report: External fire spread via windows - Analysis of the findings. Garston.

Chow, C.L., Han, S.S., Dahanayake, K.C., Chow, W.K., 2018. Fire hazards with vertical greenery systems. FPEeXTRA.

Competition Commission, n.d. The smaller suppliers of safety glass. URL webarchive.nationalarchives.gov.uk/+/http://www.competition-commission.org.uk/rep_pub/reports/1960_1969/fulltext/043c05.pdf (accessed 11.6.20).

Construction Index, 2017. Lend Lease glazing litigation: implications explained. The Construction Index. https://www.theconstructionindex.co.uk/news/view/lend-lease-glazing-litigation-implications-explained (accessed 11.6.20).

Cowles, G., 1997. Reducing radiation from building fires with fire resistant glazing, in: IPENZ Annual Conference. Presented at the IPENZ Annual Conference, Wellington, N.Z., pp. 187–191.

Curl, J.S., Wilson, S., 2015. A Dictionary of Architecture and Landscape Architecture, 3rd ed. Oxford University Press, Oxford.

David Nicholson-Cole, 2016. Rise of the glass giants: how modern cities are forcing skyscrapers to evolve. CNN. edition.cnn.com/style/article/rise-of-glass-skyscrapers/index.html (accessed 11.6.20).

Davis, L., 1990. Fire Regs Consultation B4 External Fire Spread. The Architects' Journal 191, 61–63.

Davison, R.L., 1950. Curtain Walls. Architectural Forum 92, 81–89.

Debuyser, M., Sjöström, J., Lange, D., Honfi, D., Sonck, D., Belis, J., 2017. Behaviour of monolithic and laminated glass exposed to radiant heating. Construction and Building Materials 130, 212–229. doi: 10.1016/j.conbuildmat.2016.09.139

Department for Communities and Local Government, 2013. Fire performance of green roofs and walls. Department for Communities and Local Government, London.

Dosne, R., 2012. Un air de tour infernale à Roubaix. Face au risque.

Dow, A., 2017. Exploding glass balconies in Melbourne apartments expose faulty building products. The Age. www.theage.com.au/national/victoria/exploding-glass-balconies-in-melbourne-apartments-expose-faulty-building-products-20170628-gx0lwf.html (accessed 11.6.20).

Eagle, M., 2020. Balcony fire test. Architectural Fabricators Limited. https://www.aflimited.co.uk/fire-test/ (accessed 11.10.20).

English Historic Towns Forum, 1993. Book of details & good practice in shopfront design. Bath.

Environment, Transport and Regional Affairs Committee, 2000. Potential risk of fire spread in buildings via external cladding systems. UK Parliament. publications.parliament.uk/pa/cm199900/cmselect/cmenvtra/109/10907.htm (accessed 9.16.20).

EURBAN, 2020. Balconies and CLT. EURBAN. www.eurban.co.uk/industry-insights/balconies-and-clt/ (accessed 12.10.20).

Eurostat, 2020. Eurostat Housing Statistics. Eurostat, Statistics Explained. ec.europa.eu/eurostat/statistics-explained/index.php?title=Housing_statistics#Type_of_dwelling (accessed 12.10.20).

Evans, R., 1979. Injuries produced by shattering annealed glass. Resuscitation 7, 119–126. doi: 10.1016/0300-9572(79)90006-6

Explanatory memorandum to the Building (Amendment) Regulations 2018 (No. 1230), 2018. Ministry of Housing, Communities and Local Government.

Fitch, J.M., 1955. The curtain wall. Scientific American 192, 44–49.

Freitag, J.K., 1906. Architectural engineering with especial reference to high building construction, including many examples of prominent office buildings, 2nd ed. John Wiley & Sons, New York, London.

French Government, 2011. Arrêté du 30 décembre 2011 portant règlement de sécurité pour la construction des immeubles de grande hauteur et leur protection contre les risques d'incendie et de panique.

French Government, 2010. Arrêté du 24 mai 2010 portant approbation de diverses dispositions complétant et modifiant le règlement de sécurité contre les risques d'incendie et de panique dans les établissements recevant du public, JORF n°0154 du 6 juillet 2010 (in French).

French Government, 1986. Arrêté du 31 janvier 1986 relatif à la protection contre l'incendie des bâtiments d'habitation modifié par l'arrêté du 19 juin 2015 (in French).

French Government, 1980. Arrêté du 25 juin 1980 portant approbation des dispositions générales du règlement de sécurité contre les risques d'incendie et de panique dans les établissements recevant du public (ERP) (in French).

Garis, L., Biantoro, C., 2019. Fires that commence on balconies of multi-residential buildings analysis of the national fire incident database. University of the Fraser Valley.

Ge, H., McClung, V.R., Zhang, S., 2013. Impact of balcony thermal bridges on the overall thermal performance of multi-unit residential buildings: A case study. Energy and Buildings 60, 163–173. doi: 10.1016/j.enbuild.2013.01.004

Glass for Europe, 2015. Classification of reaction to fire of glass products.

Goulouti, K., de Castro, J., Vassilopoulos, A.P., Keller, T., 2014. Thermal performance evaluation of fiber-reinforced polymer thermal breaks for balcony connections. Energy and Buildings 70, 365–371. doi: 10.1016/j.enbuild.2013.11.070

Greater London Authority, 2021. The London Plan: The spatial development strategy for greater London. Greater London Authority.

Greater Manchester Fire and Rescue Service, 2020. The Cube – Incident Report and Key Observations regarding the fire which occurred on 15 November 2019.

Hackitt, J., 2018. Building a safer future - Independent review of Building Regulations and fire safety: Final report. APS Group, London.

Handbook of fire-rated glass for schools, 2020.

Hannay, P., 1989. Building Study: Urban Transitions: City Offices, London. The Architects' Journal 189, 56.

Harada, K., Enomoto, A., Uede, K., Wakamatsu, T., 2000. An experimental study on glass cracking and fallout by radiant heat exposure. Fire Safety Science 6, 1063–1074. doi: 10.3801/IAFSS.FSS.6-1063

Hasofer, A.M., Thomas, I., 2006. Analysis of fatalities and injuries in building fire statistics. Fire Safety Journal 41, 2–14. doi: 10.1016/j.firesaf.2005.07.006

Haughton, N., 2020. Is laminate glass a fire safety risk on balconies. Sapphire Balconies Ltd.

Havel, G., 2009. Construction Concerns: Cantilevered Balconies. Fire Engineering. www.fireengineering.com/2009/01/08/266441/construction-concerns-cantilevered-balconies/ (accessed 11.11.20).

Henrik Schoenefeldt, 2019. Glass skyscrapers: a great environmental folly that could have been avoided. The Conversation. URL theconversation.com/glass-skyscrapers-a-great-environmental-folly-that-could-have-been-avoided-116461 (accessed 11.6.20).

Hietaniemi, J., 2005. Probabilistic simulation of glass fracture and fallout in fire. VTT Technical Research Centre of Finland.

Hietaniemi, J., Korhonen, T., 2005. Risk-based attestation of fire safety of wooden façades in concrete-framed residential multistory buildings (No. 32), VTT Working Papers.

HM Government, 2020. The Building Regulations 2010, Approved Document B (Fire Safety) Volume 1 (2019 edition, as amended May 2020).

HM Government, 2019a. The Building Regulations 2010, incorporating 2018 amendments. Ministry for Housing, Communities & Local Government.

HM Government, 2019b. The Building Regulations 2010, Approved Document B (Fire Safety) Volume 2 (2019 edition).

HM Government, 2018. The Building (Amendment) Regulations 2018. Ministry of Housing, Communities and Local Government.

HM Government, 2016. The Building Regulations 2010 - Approved Document L1A. Conservation of fuel and power in new dwellings (2013 edition incorporating 2016 amendments).

HM Government, 2013. The Building Regulations 2010, Approved Document K (Protecting from falling, collision and impact) (2013 edition).

Hokugo, A., Hasemi, Y., Hayashi, Y., Yoshida, M., 2000. Mechanism for the upward fire spread through balconies based on an investigation and experiments for a multi-story fire in high-rise apartment building. Fire Safety Science 6, 649–660.

Holland, C., Crowder, D., Shipp, M., 2016a. External Fire Spread – Part 1 Background research. Watford.

Holland, C., Crowder, D., Shipp, M., 2016b. External Fire Spread – Part 2 Experimental research. Garston.

Holland, C., Shipp, M., Crowder, D., 2016c. Fire safety issues with balconies. BRE Global, Watford, UK.

Home Office, 2017. Publishing Incident Recording System data on the fire and rescue service at an incident level: Project overview. the Fire Statistics team.

Housing Learning & Improvement Network, 2014. Deck access, balconies and bungalows: new trends in HAPPI award-winning buildings (Case Study). Housing Learning & Improvement Network, London.

Inquiry under the fatal accidents and inquiries (Scotland) act 1976 into the sudden death of Harry Robert McCreath, 2010.

Introduction to glass curtain wall systems, 2019. Centre for the Protection of National Infrastructure.

Jacob, L., 1997. Factors that influence spontaneous failure in thermally treated glass – nickel sulphide. Presented at the Glass processing days, Tampere, Finland.

Judiciary of England and Wales, 2014. R v Robert Warner.

Karlsson, S., 2017. Spontaneous fracture in thermally strengthened glass - A review & outlook. Ceramics Silikaty 61, 188–201. doi: 10.13168/cs.2017.0016

Kefallinos, K., 2013. Wire glass: History of technology & development (Master of Science in Historic Preservation). Columbia University.

Keski-Rahkonen, O., 1988. Breaking of window glass close to fire. Fire and Materials 12, 61–69. doi: 10.1002/fam.810120204

Kim, H.-J., 2020. The Planning Characteristics of Private External Space in Multi-family Housing - focusing on the Balconies, Loggias and Terraces as intermediate spaces in European Cases -. Journal of the Architectural Institute of Korea Planning & Design 36, 13–24. doi: 10.5659/JAIK_PD.2020.36.2.13

Klassen, M.S., Sutula, J.A., Holton, M.M., Roby, R.J., Izbicki, T., 2006. Transmission through and breakage of multi-pane glazing due to radiant exposure. Fire Technology 42, 79–107. doi: 10.1007/s10694-006-7254-x

Klein, D., Lloyd, W., 1992. The history of glass. Little, Brown and Company.

Knutt, E., 2013. Lakanal House fatal fire: the price of failure. www.constructionmanagermagazine.com /lakanal-house-price-failure/

Kotulla, T., Denstadli, J.M., Oust, A., Beusker, E., 2019. What does it take to make the compact city liveable for wider groups? Identifying key neighbourhood and dwelling features. Sustainability 11, 3480. doi: 10.3390/su11123480

Kuraray, 2019. Trosifol SentryGlas Product Portfolio.

Kuraray, 2014. Edge stability, durability and weathering.

Lacas, F., 2019. Un incendie dans le Var repose la question des feux de façade. Batiactu. www.batiactu.com/edito/un-incendie-dans-var-pose-question-balcons-bois-55863.php (accessed 11.5.20).

Lane, G., 2014. Wired safety glass deemed a serious hazard. sourceable.net/wired-safety-glass-deemed-a-serious-hazard/ (accessed 11.6.20).

Langdon Thomas, G.J., 1963. Doors and means of escape (Fire Research Note 504). Joint Fire Research Organisation, Boreham Wood, England.

Langdon-Thomas, G.J., Law, M., 1966. Fire Note 8: Fire and the External Wall. London.

Law, A., Bisby, L., 2020. The rise and rise of fire resistance. Fire Safety Journal. doi: 10.1016/j.firesaf.2020.103188

Leslie, T., Panchaseelan, S., Barron, S., Orlando, P., 2018. Deep space, thin walls: Environmental and material precursors to the postwar skyscraper. Journal of the Society of Architectural Historians 77, 77–96. doi: 10.1525/jsah.2018.77.1.77

London Borough of Islington, 2009. Accessible housing in Islington.

London Building (Constructional) By-Laws, 1952.

London Fire Brigade, 2020a. Amazon removes balcony barbecues from sale over fire risk fears. London Fire Brigade. www.london-fire.gov.uk/news/2020-news/july/amazon-removes-balcony-barbecues-from-sale-over-fire-risk-fears/ (accessed 12.10.20).

London Fire Brigade, 2020b. Don’t be the cause of a balcony blaze, warn firefighters. www.london-fire.gov.uk/news/2020-news/may/don-t-be-the-cause-of-a-balcony-blaze-warn-firefighters/

London Fire Brigade, 2019. West Hampstead Square, Automatic fire suppression system activation case study.

Lstiburek, J., 2012. Thermal Bridge Redux. ASHRAE Journal 54, 60–66.

Macfarlane, A., Martin, G., 2002. Glass - A World History, First Edition. The University of Chicago Press, Chicago.

Madden, O., 2019. Plastics in early aircraft: Enclosing the cockpit.

Mammoser III, J.H., Battaglia, F., 2004. A computational study on the use of balconies to reduce flame spread in high-rise apartment fires. Fire Safety Journal 39, 277–296. doi: 10.1016/j.firesaf.2003.11.011

Matheson, H.W., Skirrow, F.W., 1929. Vinyl ester resins and process of making same. 1,725,362.

Merwood, J., 2001. The Mechanization of Cladding: The Reliance Building and Narratives of Modern Architecture. Grey Room 4, 52–69. doi: 10.1162/152638101750420807

Michel, J.-M., n.d. Le Verr Renforce Triplex. Societe Chimique de France. URL www.societechimiquedefrance.fr/IMG/pdf/a_3_500_000.vfx2_sav.pdf (accessed 11.6.20).

Mikkola, E., 2013. Fire safety of wooden balconies, facades and eaves. KK-Fireconsult Ltd, Espoo, Finland.

Modal byelaws; Series IV; Buildings, 1952. London.

Morgado, H.J.L., Rodrigues, J., 2015a. Balcony Effect on the External Fire Spread into Upper Floors. Journal of Structural Fire Engineering 6, 255–273.

Morgado, H.J.L., Rodrigues, J.P.C., 2015b. Balcony effect on the external fire spread into upper floors. Journal of Structural Fire Engineering 6, 255–274. doi: 10.1260/2040-2317.6.4.255

Morris, B., Jackman, L.A., 2003. An Examination of fire spread in multi-storey buildings via glazed curtain wall facades. The Structural Engineer 81, 22–26.

Morrison Hershfield Limited, 2020. Building Envelope Thermal Bridging Guide v1.4. Vancouver.

Morrison Hershfield Limited, 2013. Thermal and Whole Building Energy Performance of Thermal Break Technology for Concrete Balconies in High-Rise Multi-Unit Residential Buildings.

Mowrer, F.W., 1998. Window breakage induced by exterior fires, NIST, National Institute of Standards and Technology.

Murray, S., 2009. Contemporary Curtain Wall Architecture. Princeton Architectural Press, New York.

New methods of fire protection for external steelwork: Introduction, 1974. The Architects' Journal 160, 495–516.

Information sheet, External walls 5: Curtain walling: 1 Introduction, 1971. The Architects' Journal 154, 1143–1148.

NFPA 5000, 2018.

Nguyen, K., Weerasinghe, P., Mendis, P., Ngo, T., Barnett, J.R., 2016. Performance of modern building façades in fire: a comprehensive review. Electronic Journal of Structural Engineering 16, 69–86.

Ni, Z., Lu, S., Peng, L., 2012. Experimental study on fire performance of double-skin glass facades. Journal of Fire Sciences 30, 457–472. doi: 10.1177/0734904112447179

Niazy, K., n.d. DuPont™ SentryGlas®: Safety, design possibilities & efficiencies. Latest innovations and developments. New Glass Tech. www.newglasstech.com/downloads/SentryGlas%20 technische%20brochure.pdf (accessed 11.6.20).

Nilsson, M., 2016. The impact of horizontal projections on external fire spread - A numerical comparative study. Lund.

Nilsson, M., Mossberg, A., 2016. A comparison of horizontal projections and spandrels as protection methods against external fire spread. SFPE Europe Magazine.

NZ Herald, 2016. Woman's balcony fall blamed on spontaneous failure of glass. NZ Herald. www.nzherald.co.nz/nz/womans-balcony-fall-blamed-on-quotspontaneous-failurequot-of-glass/DR6G73V6EXTGWX7OGTGYFR5PVQ/ (accessed 11.6.20).

Oleszkiewicz, I., 1991. Vertical separation of windows using spandrel walls and horizontal projections. Fire Technol 27, 334–340. doi: 10.1007/BF01039884

Omrani, S., Garcia-Hansen, V., Capra, B.R., Drogemuller, R., 2017. On the effect of provision of balconies on natural ventilation and thermal comfort in high-rise residential buildings. Building and Environment 123, 504–516. doi: 10.1016/j.buildenv.2017.07.016

Onyx Solar, 2011. Onyx Technical Guide.

O'Regan, C., 2015. Structural use of glass in buildings, 2nd edition. ed. The Institution of Structural Engineers, London, England.

Origoni, C., Origoni, M., 2020. A brief history of the balcony, from ancient Persia to the COVID-19 pandemic . Domus. URL www.domusweb.it/en/architecture/2020/04/03/a-brief-history-of-the-balcony-from-ancient-persia-to-the-covid-19-pandemic.html (accessed 11.10.20).

Ouida Angelica Biddle, n.d. A short history of the mirrored glass facade. Pin-Up. pinupmagazine.org/ articles/panorama-a-short-history-of-the-mirrored-glass-facade-buildings-ouida-biddle (accessed 11.6.20).

Oxford Dictionary, 2020. Oxford Dictionary entry: balcony. Oxford Learner's Dictionary. URL www.oxfordlearnersdictionaries.com/definition/english/balcony (accessed 12.10.20).

Pagni, P.J., Joshi, A.A., 1991. Glass breaking in fires. Fire Safety Science 3, 791–802. doi: 10.3801/IAFSS.FSS.3-791

Paragraph 212, Fire Grading of Buildings, Part I, 1946, Post-War Building Studies No. 20.

Parry, R., Wade, C., Spearpoint, M., 2003. Implementing a glass fracture module in the BRANZFIRE zone model. Journal of Fire Protection Engineering 13, 157–183. doi: 10.1177/1042391503033366

Pringle Anzia, T., 2019. Curtain wall cladding. Build 173, 53–55.

Quinio, V., Neuhuber, T., 2020. 2008-2018: An uneven geography of population growth in UK cities. www.centreforcities.org/blog/2008-2018-an-uneven-geography-of-population-growth-in-uk-cities/

Ratay, R., 2017. Through the windshield together. Future Travel. futuretravel.today/through-the-windshield-together-efac522fbe1c (accessed 11.6.20).

Razwick, J., 1999. The next thousand years: Fire-rated glazing in the next millennium. US Glass Metal & Glazing 34.

Ribeiro, C., Ramos, N.M.M., Flores-Colen, I., 2020. A Review of Balcony Impacts on the Indoor Environmental Quality of Dwellings. Sustainability 12, 6453. doi: 10.3390/su12166453

Rickard, I., Spearpoint, M., Lay, S., 2020. The performance of laminated glazing subjected to constant heat fluxes related to building fires. Fire and Materials 45, 283–295. doi: 10.1002/fam.2939

RICS, 2018. RICS property measurement - Professional statement, Global, RICS professional standards and guidance, Global. Royal Institution of Chartered Surveyors, London.

Rostron, R.M., 1960. Construction: General; light cladding, 4 fire resistance. The Architects' Journal 131, 437–440.

Sacks, D.E., Carpenter, B.S., 2015. Quality control issues with fire-related laminated glazing. Construction Specifier.

Safety glass from Indestructo Glass Ltd., 1931. discovery.nationalarchives.gov.uk/details/r/C4014356 (accessed 11.6.20).

SAFTIFIRST, 2020. Safe glass for schools . safeglassforschools.com/fire-rated-glass/unsafe-wired-glass/

San Diego, D., 2011. Wired glass still a misunderstood product. Glass Magazine 3.

Sapphire, 2019. White Paper: Recommendations regarding fire safety on balconies in high rise residential blocks.

Sapphire Balconies, 2020. Laminate Glass Questions & Answers. Resibuild Events. www.resi.build/ post/laminate-glass-questions-answers (accessed 3.4.21).

Sapphire Balconies Limited, 2020. Sapphire balconies. sapphire.eu.com/ (accessed 3.11.19).

Scott Murray, 2009a. Contemporary Curtain Wall Architecture. Princeton Architectural Press, New York.

Scott Murray, 2009b. Contemporary Curtain Wall Architecture. Princeton Architectural Press, New York.

Shields, T.J., Silcock, G.W.H., Flood, M., 2002. Performance of a single glazing assembly exposed to a fire in the centre of an enclosure. Fire and Materials 26, 51–75. doi: 10.1002/fam.783

Shuman, F., 1892. Process of embedding wire-netting in glass. 483,021.

Simpson, J., 2020. Leaked Barking fire report reveals 'significant risk to life' from blaze. Inside Housing. www.insidehousing.co.uk/news/news/leaked-barking-fire-report-reveals-significant-risk-to-life-from-blaze-66321 (accessed 12.10.20).

Sincaglia, P.E., Barnett, J.R., 1996. Development of a glass window fracture model for zone-type computer fire codes. Journal of Fire Protection Engineering 8, 101–117. doi: 10.1177/104239159600800301

Skelly, M.J., Roby, R.J., Beyler, C., 1991. An experimental investigation of glass breakage in compartment fires. Journal of Fire Protection Engineering 3, 25–34. doi: 10.1177/104239159100300103

spandrel, n., OED Online, 2020. Oxford University Press, Oxford.

Spearpoint, M., Fu, I., Frank, K.M., 2019. Façade fire incidents in tall buildings. CTBUH Journal 34–39.

Spearpoint, M., Hopkin, C., 2020. A study of the time of day and room of fire origin for dwelling fires. Fire Technol 56, 1465–1485. doi: 10.1007/s10694-019-00934-5

Special Publication 87, Wall Technology Volume E, Large Heavy Units on Framed Buildings and in-situ Concrete, 1992. London.

Special Publication 87, Wall Technology, Volumes A-G, 1993. London.

Standing Committee on Structural Safety, 2019. SCOSS Alert, Structural Safety of Glass in Balustrades (Safety warning).

Stelzer, I., 2010. High Performance Laminated Glass. Presented at the Challenging Glass 2 - Conference on Architectural and Structural Applications of Glass, Delft, p. 8.

Susorova, I., Stephens, B., Skelton, B., 2019. The Effect of Balcony Thermal Breaks on Building Thermal and Energy Performance: Field Experiments and Energy Simulations in Chicago, IL. Buildings 9, 190. doi: 10.3390/buildings9090190

Suzuki, Takeshi, Yamada, Takanahs, Ken'ichi, Yanai, Abe, Nobuyuki, Iida, Akihiko, Sekizawa, Kurioka, Satoh, 2004. A study on ejected flames. Presented at the AOFST 6.

Szikra, C., Takács, L., 2018. Validation of CFD simulation model of French balcony façade fire test with parapet glass, proceedings. Presented at the Fire and Evacuation Modeling Technical Conference (FEMTC), Gaithersburg, Maryland.

Technical study, Enclosure 1: Functions of building enclosure: 1 Introduction, 1971. . The Architects' Journal 154, 161–170.

The Building Regulations 1965.

The Commission of the European Communities, 1996. Commission Decision of 4 October 1996, establishing the list of products belonging to Classes A "No contribution to fire"

provided for in Decision 94/611/EC implementing Article 20 of Council Directive 89/106/EEC on construction products (96/603/EC).

Todd, C., 2018. Report for The Grenfell Tower Inquiry; Legislation, Guidance, and Enforcing Authorities Relevant to Fire Safety Measures at Grenfell Tower. Farnham.

Traverse, C.J., Pandey, R., Barr, M.C., Lunt, R.R., 2017. Emergence of highly transparent photovoltaics for distributed applications. Nature Energy 2, 849–860. doi: 10.1038/s41560-017-0016-9

Trends in Wall Design, 1971. The Architects' Journal 154, 719–722.

Viollet-le-Duc, E., 1854. Hourd, in: Dictionnaire Raisonné de l'architecture Française Du XIe Au XVIe Siècle.

Volitisation and the Curtain Wall, 1985. The Architects' Journal 181, 71–72.

Wang, Y., Hu, J., 2019. Performance of laminated glazing under fire conditions. Composite Structures 223, 110903. doi: 10.1016/j.compstruct.2019.110903

Watkins, G.B., Ryan, J.D., 1933. Cellulose acetate plastic improves laminated safety glass. Ind. Eng. Chem. 25, 1192–1195. doi: 10.1021/ie50287a003

Wheelchair accessible housing, 2007. Greater London Authority.

Wilkes, M., 2020. Brisbane "urban forest" may not be as sustainable as it looks. stuff.co.nz. www.stuff.co.nz/life-style/homed/sustainable-living/123158487/brisbane-urban-forest-may-not-be-as-sustainable-as-it-looks (accessed 12.10.20).

Wong, D., Li, K.Y., Spearpoint, M., 2014. A probabilistic model for the fallout area of single glazing under radiant heat exposure, in: Fire Safety Science. pp. 444–457. doi: 10.3801/IAFSS.FSS.11-444

Xie, Q., Zhang, H., Wan, Y., Zhang, Q., Cheng, X., 2008. Full-scale experimental study on crack and fallout of toughened glass with different thicknesses. Fire and Materials 32, 293–306. doi: 10.1002/fam.968

Yeomans, D., 2001. The origins of the modern curtain wall. APT Bulletin: The Journal of Preservation Technology 32, 13–18. doi: 10.2307/1504688

Yeomans, D., 1998. The pre-history of the curtain wall. Construction History 14, 59–82.

Young, G., 2010. Letter to the Swindon Advertiser.

Zippia, n.d. Quality Glass Company History. www.zippia.com/quality-glass-careers-264706/history/ (accessed 11.6.20).

Appendix I

This Appendix presents a timeline of key events (to Nov 2020) that impact on the fire safety in buildings regulatory environment following on from the Grenfell Tower fire. The majority of these events are specific to the Building Regulations and guidance in England, but some have a wider UK direct or indirect impact. Where available, hyperlinks to the original document or host webpage are given.

June 2017

- Grenfell Tower fire on the night 14th June.
- Independent Expert Advisory Panel established by the Department on 27th June to advise the Secretary of State for Housing, Communities and Local Government on urgent building safety matters.

July 2017

- Industry Response Group (IRG) established by the Department on 10th July to support the process of building remediation.

August 2017

- The Terms of Reference for the '*Independent Review of Building Regulations and Fire Safety*' led by Dame Judith Hackitt were published on the 30th August.

Sept 2017

- Call for Evidence on '*Building Regulations and Fire Safety*' issued on 12th Sept.

Oct 2017

- Call for Evidence on '*Building Regulations and Fire Safety*' closed on 13th Oct.

Dec 2017

- Publication of the interim report on '*Independent Review of Building Regulations and Fire Safety*' by Dame Judith Hackitt on 18th Dec.

May 2018

- Publication of the final report on '*Building a safer future - Independent review of building regulations and fire safety*' by Dame Judith Hackitt on 17th May. That same day the Secretary of State committed in Parliament to consult on banning the use of combustible materials in cladding systems on high-rise residential buildings.
- Grenfell Tower Inquiry Phase 1 hearings began on 21st May.

June 2018

- A public consultation was launched on '*Banning the use of combustible materials in the external walls of high-rise residential buildings*' on 18th June.

Aug 2018

- The consultation on '*Banning the use of combustible materials in the external walls of high-rise residential buildings*' closed on 14th Aug.

Dec 2018

- Grenfell Tower Inquiry Phase 1 hearings concluded on 12th Dec.
- Call for evidence for the '*Technical review of Approved Document B of the Building Regulations*', opened on 18th Dec.
- Introduction of a new prescriptive regulation in December 2018 through the Building (Amendment) Regulations (2018). In addition, the '*Explanatory memorandum to the Building (Amendment) Regulations 2018*' No. 1230 was published on 30th Dec.
- '*Building a Safer Future: An Implementation Plan*' published.

March 2019

- The call for evidence opened in Dec 2018 on the '*Technical review of Approved Document B of the Building Regulations*' closed on the 15th March.

April 2019

- Amendments to Volume 1 and Volume 2 of Approved Document B (ADB) made between November 2018 and April 2019 published by MHCLG.

June 2019

- MHCLG issued the '*Building a safer future: Proposals for reform of the building safety regulatory system*' consultation on 6th June.
- Consultation on '*The Regulatory Reform (Fire Safety) Order 2005*' was issued on 6th June by the Home Office.

July 2019

- Following on from the April 2019 publication of the amendments to ADB, a final clarified ADB was issued.
- '*The Regulatory Reform (Fire Safety) Order 2005*' consultation closed on 31st July.
- The '*Building a safer future: Proposals for reform of the building safety regulatory system*' consultation closed on 31st July.

Aug 2019

- The Construction Industry Council (CIC) published its 'Raising the Bar' report.

Sept 2019

- Analysis of the responses to the Dec 2018 Call for Evidence '*Technical review of Approved Document B of the Building Regulations*'.

Oct 2019

- Grenfell Tower Inquiry '*Phase 1 Report*' published on the 30th Oct.

Jan 2020

- Technical consultation paper on the '*Review of the ban on the use of combustible materials in and on the external walls of buildings including attachments*' issued by MHCLG.
- Consultation on '*Fire safety: risk prioritisation in existing buildings – a call for evidence*' was opened on 20th Jan.
- Also on 20th Jan MHCLG publishes '*Advice for building owners of multi-storey, multi-occupied residential buildings*' along with Annex A '*Advice for building owners on assurance and assessment of flat entrance fire doors*'. The document superseded the previously released Advice Notes 1 to 22.
- Grenfell Tower Inquiry Phase 2 hearings commenced on 28th Jan.

Feb 2020

- Consultation on '*Fire safety: risk prioritisation in existing buildings – a call for evidence*' was closed on 17th Feb.

March 2020

- '*The Regulatory Reform (Fire Safety) Order 2005: Call for Evidence*' summary of responses published 19th March.

April 2020

- MHCLG issued the outcome to the '*Building a safer future: Proposals for reform of the building safety regulatory system*' consultation on 2nd April.
- Secretary of State for Housing issued his '*MHCLG updates on building safety reforms*' letter to all MPs in England.

July 2020

- Home Office '*Consultation on Fire Safety*' opened on 20th July.
- *Draft Building Safety Bill* presented to Parliament.

Oct 2020

- Home Office '*Consultation on Fire Safety*' closed on 12th Oct.
- Following on from the report in Aug 2019, the Construction Industry Council (CIC) published the 'Setting the Bar' report.

Nov 2020

- Updated editions of ADB Volume 1 and Volume 2 published.
- MHCLG publishes a supplementary note to the '*Advice for building owners of multi-storey, multi-occupied residential buildings*' previously published in Jan 2020.

APPENDIX C1:
Balcony fuel load survey

Authors: S Bryant[1], I Rickard[1], M Spearpoint[1]

[1]OFR

Contents

C1-1. Background 4
C1-2. Introduction 6
C1-2.1 Fire load surveys 6
C1-2.2 Day-to-day use of balconies 7
C1-2.3 Recent balcony fires 8
C1-2.4 Balcony fire safety guidance 9
C1-3. Methodology 11
C1-3.1 Data collection 11
C1-3.2 Fire load determination 13
C1-3.3 Balcony content assumptions 15
C1-3.4 Social Grade 16
C1-3.5 Statistical significance 17
C1-3.6 Limitations 17
C1-4. Results 19
C1-4.1 Observations 19
C1-4.2 Fire load energy density 19
C1-4.3 Heat release rate 21
C1-4.4 Fuel sources for a ‘representative balcony’ 22
C1-4.5 Cantilevered vs recessed balconies 23
C1-4.6 London vs elsewhere 23
C1-4.7 Effect of Social Grade 24
C1-4.8 Trigger heights 26
C1-4.9 Balcony areas 27
C1-4.10 Time of year 28
C1-5. Conclusions 31
C1-6. References 33
Appendix I – Surveyed urban areas 37
Appendix II – Example balconies 38
Appendix III – Data collection 40
Appendix IV – Fire load calculations 42
Appendix V – Balcony contents fuel properties 44

Appendix VI – Calculation of individual balcony fire load 47
Appendix VII – Additional figures 49
Appendix VIII – Statistical significance 58
Appendix IX – Additional tables 62

Figures

Figure C1-1 Urban areas where it was possible to survey balconies 12
Figure C1-2 a) Balcony type varying with building storey height, b) Empty and non-empty balconies varying with storey height 19
Figure C1-3 Cumulative distribution function of fire load energy density 20
Figure C1-4 Cumulative distribution function of heat release rate per unit area 22
Figure C1-5 Normalised balcony content count of most common items for the different Social Grades 25
Figure C1-6 Fire load energy density against balcony area with Social Grade 28
Figure C1-7 Average fire load energy density over time 30

Tables

Table C1-1 Parameters considered in survey 14
Table C1-2 Variation in Social Grade depending on urban/rural location 17
Table C1-3 Fire load results for all balconies surveyed 20
Table C1-4 Fire load results for cantilevered and recessed balconies 23
Table C1-5 Fire load results for London vs rest of England 24
Table C1-6 Fire load energy density results depending on Social Grade 26
Table C1-7 Fire load results depending on building height 27
Table C1-8 Fire load results depending on balcony area 28
Table C1-9 Fire load results depending on time of year from Google Street View images 29
Table C1-10 FLED results depending on year from Google Street View images 29

C1-1. Background

In June 2017, the Grenfell Tower fire resulted in the death of 72 residents, many others becoming homeless and a wider impact on the local community. The incident also posed a significant challenge to the operational capabilities of the London Fire Brigade. In response to the Grenfell Tower fire, Dame Judith Hackitt conducted an independent review of Building Regulations and fire safety in England where she supported the recommendation to carry out "…*further research with the construction industry to understand who uses Approved Documents, how they are used and where they are used to influence how they should be developed in the future*…".

In response to the recommendations made by Dame Judith Hackitt the Department of Levelling Up, Communities and Housing (DLUHC), previously the Ministry for Housing, Communities and Local Government (MHCLG), have commissioned several research projects to provide information on any future changes to fire safety policy and guidance in support of the Building Regulations in England. One of these projects is to examine the role of balconies, spandrels, and laminated glass in the fire safety of buildings (Project CPD 004/0120/205, Fire Safety: Balconies, Spandrels, and Glazing).

It is important to recognise that balconies, spandrels, and laminated glass are design components associated with the external walls of buildings that enhance the functionality of buildings for reasons that are not only directly linked to fire safety considerations. Nevertheless, each component may have profound implications for the performance of a building during a fire. The components may contribute to the source of the fire, they may become the target of a fire, but they may also provide a means to mitigate the effects of a fire. Although the components may be viewed as isolated elements, in practice the three are linked by the role they may play in supporting, or undermining, the fire safety strategy for a building through their impact on fire spread.

As a result of the previous work in support of the balconies, spandrels, and laminated glass project, it has been identified that there is currently no guidance available on the likely fuel load on balconies or terraces (hereafter referred to as 'balconies'). The lack of information in this area means that at the moment it is challenging to gain sufficient supporting evidence to make informed decisions with respect to balcony designs, or to design experiments to assess balcony performance. To inform balcony design considerations, an assessment of the credible fuel load on balconies has been selected as one of the actions of the research project. This fuel load survey aims to gather sufficient information that the

likely fuel load of balconies can be assessed, which could inform further research and inform fire safety considerations during the design of balconies.

This report outlines the methodology and results of the balcony fuel load survey to determine if the usual contents of private residential balconies warrant a representative external fuel load that could be taken into account during the design stage. It examines the moveable content of private balconies attached to residential buildings within England. The research does not consider private balconies associated with office buildings, or access balconies to blocks of flats.

C1-2. Introduction

Determining the fuel content of a space allows assessment of the potential severity of a fire in that area. The fuel content of a space is known as the fire load (also referred to as fuel load) and is often split into the permanent component (i.e., the structure, linings, etc.) and the variable component (i.e., moveable furniture, etc.).

Fire load is typically expressed either as an equivalent mass of defined combustible material, such as timber, or in terms of the equivalent energy. The work presented in this paper presents the fire load as a fire load energy density, FLED, (MJ/m^2). Where comparisons are made to the work of authors who expressed fire load in terms of mass of fuel, assumptions have been made to allow a conversion for comparison.

Fire loads are typically defined as a distribution and will either be used as a stochastic or deterministic input to fire engineering calculations. As an example of this a commonly used fire load distribution for a dwelling would be a Gumbel Type 1 distribution with a mean of 780 MJ/m^2 and coefficient of variation of 0.3 [1]. The 80% percentile value of 870 MJ/m^2, or similar, may be used in deterministic design to ensure a level of conservatism.

This report outlines the methodology and results of a balcony fire load survey carried out to determine if the usual contents of private residential balconies warrant a representative external fire load that could be taken into account during the design of balconies. The moveable content of private balconies attached to residential buildings within England have been evaluated. The research does not consider private balconies associated with office buildings, or access balconies to blocks of flats / apartments.

C1-2.1 Fire load surveys

There have been multiple surveys conducted in the past 50 years on fire loads and probably one of the most comprehensive collections is that of Thomas [2], albeit this work was published in 1986. Traditionally, fire load assessments have been conducted by physically inspecting occupancies to obtain an inventory of items which are then weighed. This method has been repeated around the world, from office buildings in United States during the 1970’s [3], to residential buildings in Japan [4], and public buildings in France in the early 2000’s [5].

More modern methods of survey have been used in recent years to collect fire load data. In 2005, Bwalya et al. [6] completed a pilot survey of residential living rooms in Canada using a web-based questionnaire rather than by taking an inventory. The study included a pre-determined list of common household items to allow

respondents to select quantities, sizes and materials. In another survey, Bwalya et al. [7] completed a fire load survey of family dwellings in Canada based on information obtained from images on real-estate websites. More recent digital technologies introduce the potential for assessments to be conducted virtually using images and the application of machine learning based algorithms, such as that work of Elhami-Khorasani and Gernay [8]. Spearpoint et al. [9] have previously used mapping tools provided by Google to determine fire load densities for car parking buildings.

Kose et al.'s moveable fire load survey of Japanese dwellings [4] is the only survey identified by the authors which included balconies. Apartment balconies were assessed to determine the total dwelling fire load. This study was conducted by giving residents a survey to fill out and the results of the survey were converted into an equivalent timber fire load. A total of 139 balconies were included in the study of 1,000 dwellings, with a calculated average fire load equivalent to 11.5 kg/m^2 of wood, with a standard deviation of 10.3 kg/m^2. Assuming a calorific value of wood of 20 MJ/kg [10], this results in an average FLED of 223 MJ/m^2.

The data sets produced in fire load surveys are limited by the survey method adopted and the available resources. However, the values obtained from historic, limited, surveys are widely accepted in design and the values are included in guidance documents.

C1-2.2 Day-to-day use of balconies

As more people are living in cities, and more high-rise residential blocks are being built in Britain [11], more people are using private balconies as their outside space. Balconies are used for storage, and for many people within high-rise buildings, as their private outdoor space. Use as the latter increased during the COVID-19 pandemic [12], when the population was mandated by laws to stay at home, or in private outdoor space, and social mixing was restricted [13]. The London Housing Design Guide published in 2010 [14], introduces the requirement for 1-2 person flats to have a minimum of 5 m^2 of private outdoor space, and this requirement has continued into the London Plan 2021 [15] and in the London Plan Guidance, LPG, which is currently published in draft form for consultation [16] The LPG maintains the minimum of 5 m^2 and it is clear that these balconies may contain combustible items as best practice guidance suggests dimensioning balconies to "*increase opportunities for planting, food-growing, storage of light gardening equipment and clothes drying*". Winter gardens (enclosed balconies) are also considered appropriate in limited circumstances but have not been included in the work presented in this paper.

The use of balconies may vary and could be influenced by factors such as:

- Their size,
- Their orientation in relation to the sun,
- Their exposure to external elements such as wind and rain,
- The local climate, and
- The time of the year.

Balconies can be used as dining spaces with a table and few chairs, or even as an extension of a living room with large furniture items such as sofas and potentially heating equipment. They can also be used as a storage space containing substantial amounts of combustible materials and may be fully open (aside from the balustrade) or partially or fully enclosed. The uses of residential balconies may affect the fire load present, and the fire load may change throughout the year as a result of seasonal variations.

Following a number of balcony fires in recent years, and a general increase in awareness of external fire spread largely driven by the fire at Grenfell Tower and proceeding inquiry, there is an increased consideration of the fire safety risk associated with having materials stored on balconies, as outlined in a report by Holland et al. [17]. Large quantities of combustible materials may increase the severity of a fire and activities such as heating or cooking may increase the likelihood of a fire starting. Many regional fire and rescue services have published recommendations and guidance for the use of balconies in recent years, these recommendations are covered further in Section C1-2.4.

C1-2.3 Recent balcony fires

To understand the nature of fires that can occur on balconies, information can be assessed through statistical records and via examining individual incidents.

Through information obtained through the Freedom of Information requests with various fire and rescue services within Great Britain, AliDeck have produced two balcony fire statistical reports, covering 2017-2020 [18] and 2020-2021 [19]. Over the four-year period covered, there were a total of 1085 balcony fires throughout Great Britain, with 67% (731) of these occurring within London. In total, 48% (524) of fire were started through the improper disposal of smoking materials. There were 341 fires with ‘other’ as the cause of the fire, and a further 64 where the cause of fire was unknown. The next leading known cause of balcony fires was deliberate, with 53 fires (5%) over the four-year period being identified as being purposeful. From this data, it is clear that smoking and the improper disposal of smoking materials is the largest cause of balcony fires in Great Britain.

Some examples of fires which have received media coverage and involved balconies or balcony contents and resulted in fire spread include: the Lacrosse Docklands fire in Melbourne in 2014 [20], the Northern Quarter Lighthouse Fire in Manchester in 2017 [21], and the Poplar fire in London in 2021 [22].

C1-2.4 Balcony fire safety guidance

In 2021, the London Fire Brigade (LFB) issued a Fire Safety Guidance Notes for housing providers, landlords and residents, highlighting the hazards, risks, and the danger of fires on residential balconies [23]. The study reported found that in the 26 months leading up to January 2020, there were 388 balcony fires, with the cause of the balcony fires being: 67% smoking materials, 10% lighters, 10% matches, and 7% barbeques. LFB gave recommendations to prevent the problem of balcony fires, including:

- The storage of white goods on balconies should be discouraged as they contribute to the fire load.
- The use of barbeques should be discouraged, with guidance on safe usage provided to occupants, though the terms of tenancy could prohibit their use.
- Smoking on balconies should be discouraged, stakeholders should encourage responsible behaviour, so that where smoking is permitted, the possibility of incorrect disposal does not cause a fire.
- The fire risk assessment for the building should propose mitigation for balconies that are used for storage.
- Sprinklers installed and operational within a flat can prevent the spread of fire from a balcony to within the building.
- The Fire Safety Guidance note is distributed to occupants of a residential building to ensure they are aware of the risks.

Recommendations from the (then) Ministry of Housing, Communities and Local Government [24], insurance companies [25], housing associations [26], and LFB [27] all discuss reducing ignitions, e.g. by not using barbeques, and reducing fire load by not storing combustible items on balconies. Controlling the use of privately owned spaces is however challenging and while occupants can be alerted to dangers it is not credible that the hazard can be removed.

In July 2020, the Welsh Government issued a advice note written for building owners and residents of blocks of flats [28], discussing the fire risks associated with flats with balconies. Within this note it is stated:

> "*2.8. The fire risk on balconies can also be increased due to the use of balconies for storage, or the unsafe disposal of smoking materials and the misuse of barbecues.*

2.9. Building owners should have policies in place as to what can and cannot be stored and used on balconies by residents and should review these in light of the materials used in the balcony construction. They should also communicate with residents to ensure their understanding of these risks."

Here, the Welsh Government is commenting on the use of private balconies and suggesting that it should be within the remit and responsibility of a building owner to communicate guidance on the use of the balconies, taking into account the balcony construction.

C1-3. Methodology

C1-3.1 Data collection

When collecting the data for the survey, it was not practical to use the traditional in person method of accessing balconies to measure the weights of contents. Gaining access to many residential buildings with private dwellings and balconies would be challenging. In addition, the ongoing COVID-19 pandemic functionally prohibited this approach and due to available resources conducting the survey in person would have meant limiting the geographical extent and number of balconies. The method followed takes advantage of balcony visibility on modern web mapping platforms such as Google Maps.

The following methodology was used when surveying balconies:

1) Rough target areas were identified to capture a range of geographic locations

2) Property listing websites were searched to find properties with balconies in the target areas. The postcode of a property with a balcony was noted as a candidate survey location, ensuring there should be some balconies within the area which can be surveyed.

3) The postcode in which the property with balcony was found was surveyed via Google Street View and satellite images from Google Maps to identify (for visible balconies) the balconies present and their details and contents.

4) When reviewing the identified balconies in each selected postcode area, the following information was recorded: approximate balcony width and depth, building height in storeys, approximate age of the building, whether the balcony was cantilevered or recessed, and the balcony contents. In addition, available information on the date the images were captured was recorded.

5) This process was repeated for various urban areas in England.

Figure C1-1 Urban areas where it was possible to survey balconies using this method, teal, areas where dwellings with balconies could not be identified or balconies were not visible using this method, red

The urban areas surveyed as part of this study are shown in Figure C1-1, where a teal location indicates that following the method outlined above resulted in balconies that could be surveyed and their contents collected. A red location indicates that by following the method outlined, no balconies were found for which it was possible to assess fire load. This does not mean that there were no balconies within that area,

just that the search using property websites did not result in any balconies. While a manual search of the urban areas could have been conducted, it was the aim to keep the method consistent and avoid potential biases. Appendix I gives more detail on the surveyed areas and Appendix II shows some typical balconies.

Table C1-1 shows the parameters considered in the fire load survey. These parameters were used both to assess an influence on the fire load and also to try to ensure that the survey sample is representative of England. Appendix III shows an example of the data collected.

C1-3.2 Fire load determination

When determining the calorific output of the materials located on the balconies, the mass of the material was not known, and was estimated as an average for the various different forms of fire load. This method is similar to the method followed by Bwalya et al. [6] where the actual contents could not be weighed, and so representative values for mass and calorific values for items were taken. Appendix IV shows an example calculation of the fire load.

Table C1-1 Parameters considered in survey

Parameter	Commentary
Urban area	Different urban areas around England where targeted with the aim of capturing the effect of the geographical location and local climate.
Postcode	The complete seven-digit postcode of survey areas was used to determine the Social Grade of the area, as discussed in Section C1-3.4.
Approximate building age	Estimated based on building design and visual appearance of the façade [29].
Number of storeys	As a proxy for building height which could not be measured accurately the number of storeys of each building surveyed was recorded to allow estimation of building height.
Occupation status	There is the potential for apartments to be vacant. An assessment of this was made based on whether contents could be seen through windows, if windows were open, if clothing or other soft materials were located on the balcony. The number of apartments determined as being potentially unoccupied was negligible, with only 8 of the 1020 assessed as unoccupied. These have still been included within the data.
Balcony depth and width	This was estimated to enable both the definition of a 'representative balcony' and the assessment of fire load per unit area.
Recessed or cantilevered balconies	This was recorded to allow assessment of the potential variation in fire load between recessed and cantilevered balconies with the latter being more exposed.
Google Street View data	The URL of the Google Street View location was recorded so that the balcony view could be revisited if needed. The date of the images on Google Maps was also recorded as images are updated periodically, and to check a range of periods during the year to account for seasonal variations.
Balcony contents	While there are a wide range of items that can appear on balconies, in total, 35 different balcony contents were recorded, including chairs and tables made of metal, wood or plastic, clothes airers, plant pots, bikes, wardrobes, and children's toys. Rather than following a method similar to that used by Bwalya et al. [6] where a list of contents was determined before the survey started, categories were defined in this survey based on the items observed.

C1-3.3 Balcony content assumptions

In the determination of the fire load, some assumptions regarding the recorded balcony contents have been made. These include:

- That all plant pots present on balconies were polyethylene [10]. While plant pots come in a range of materials including other plastics and terracotta, it is difficult to determine the material of a plant pot from a distance, and without gauging its mass. In order to be conservative, it was assumed that each plant pot was plastic. As there were a range of plant pots on the balconies, from small 15 cm diameter pots to some larger 75 cm diameter planters, a pot of 30 cm diameter with a weight of 1.3 kg was used to represent each pot. This necessary simplification was considered reasonable and is likely to be conservative.

- For clothes airers and washing lines, it was assumed that each item held one load of laundry, with a mass of 7 kg as this is the capacity of a standard washing machine. The heat of combustion was taken to be 18.4 MJ/kg, based on the heat of combustion of cotton 16.5-20.4 MJ/kg [10]. While polyester has a higher heat of combustion of 21.6-29.8 MJ/kg [10], the lower value was used to account for the fact that the laundry would likely be a mixture of fabrics and also may not be dry so that the water content within the clothing would affect the fire properties.

- It was assumed that there were no smaller combustible items that could contribute to a balcony fire, such as candles, magazines and newspapers, and disposable barbeques etc. This assumption was necessary as the viewing angle and the level of detail that could be seen from Google Maps meant identification of these small items was not possible. In addition, any floor coverings, such as rugs or artificial grass could not be observed and so were also not included within the survey.

- It was assumed that since the photographs were taken throughout the year that the potential influence of any seasonality of fire load on the results was mitigated.

Appendix V gives more detail on the applied balcony contents fuel properties and Appendix VI illustrates the calculation of individual balcony fire load.

Following the calculation of the fire load attributed to the various balcony contents, the average number by mass, of each item was determined for the ‘representative balcony’. The contents of the representative balcony were categorised as either plastic or wood, and the proportion of the total fire load composition determined.

C1-3.4 Social Grade

When examining the moveable fire load on a balcony, it was hypothesised that it may correlate to household affluence. It was thought that building occupants with a higher disposable income may have more items on their balcony such as outdoor furniture, equally occupants that are less affluent may live in a small dwelling where the outdoor space is required for storage. There may also be other social factors that influence balcony use, such as the number of people living in a dwelling, and whether regular access to the balcony is required.

Social Grade, as determined by the Market Research Society, MRS, has been used as a comparative classification to determine if there is a difference in balcony fire loads dependent upon household affluence. It was also considered necessary to consider social grade to allow an assessment to be made as to how well the sampled data correlates with society in England today.

Social Grade is split into 6 bands, A to E, with 1 of 4 bands being associated with each postcode. Grade AB, C1, C2, and DE. Grade AB is classified as being higher educated people, people with professional and managerial positions. Grade DE includes semi-skilled and unskilled manual workers, the unemployed, and people working low grade jobs.

The census information is used by the MRS to determine a Social Grade per household, based on the highest income earner within the household, and then made available as an average Social Grade per postcode, which is how it was used in this study. For individual dwellings within a postcode, it cannot be said with certainty that the occupants will follow the average distribution for the postcode, but it allows a reasonable approximation. When the Social Grade distribution is determined for a city, once again, the average of all the individual dwellings is taken into account for the entire population.

Data relating to housing type and Social Grade is derived by the MRS from the national census data from 2011, obtained via the Office for National Statistics [30], as data from the 2021 census will not be released until March 2023. It should be noted that some of the developments sampled have a construction date after this, and may themselves have impacted the Social Grade of an area. Following the postcode survey, it was attempted to ensure that the sampled postcodes were representative of the Social Grade distribution in England, so that the balcony contents recorded were representative of English society. It should be noted that the distribution was not achieved for the individual balconies and households, but the postcodes in which the balconies are present.

There are over 22 million households within England, with 1.36 million households being within London [31]. Table C1-2 shows how the average Social Grade changes depending on the method of grouping the data. For the surveyed balconies, the

Social Grade distribution is comparable to that of urban England and areas outside of London.

Table C1-2 Variation in Social Grade depending on urban/rural location, data from Market Research Society [32]

Area	%AB	%C1	%C2	%DE
England	23%	31%	21%	25%
Urban vs rural				
Urban England	22%	31%	20%	27%
Rural England	28%	30%	24%	20%
London vs outside of London				
London	32%	33%	13%	22%
Outside of London	22%	31%	22%	26%
Sampled areas				
Sample Cities	22%	31%	19%	27%
Sample Postcodes	22%	33%	13%	32%

An attempt was made to increase the proportion of postcodes where the dominant Social Grade was C2, but for those postcodes, the dominant housing type was semidetached or terraced dwellings, built early- to mid-1900s with gardens and limited or no balconies. Overall, within the sampled postcodes, Social Grade C2 is not a dominant Social Grade, and in 55% of cases was the minority Social Grade for the surveyed areas.

C1-3.5 Statistical significance

When analysing the groups of data, the statistical significance of the results was determined by comparing the groups using a two-tailed t-test, with a 95% significance level. Where the results were determined to be statistically significant using this test it is noted within the analysis. Appendix VIII gives the analyses of statistical significance.

C1-3.6 Limitations

By adopting the advantages of using Google Street View, the survey was limited to balconies with clear glass or railing balustrades. If balconies had opaque balustrades, no contents were observed and so the balcony was not recorded. Although exact numbers were not recorded, it was observed that the balconies with opaque balustrades were more likely to have been built in the 1950s/60s, and there were around 75-100 balconies where the contents could not be surveyed due to solid balustrades. These locations make up some of the red markers in Figure C1-1.

The effect of viewing angle also limited the number of balconies that could be observed for taller buildings, as images available on Google Street View are taken from street level, making it difficult to accurately record items located several storeys above. It could also not be observed if there were rugs or artificial grass on the balconies due to the viewing angle.

Where balconies had reeds or plastic sheets tied to the balustrades for privacy, it was often still possible to determine the contents of the balconies. In these scenarios, the fire load associated with the privacy screens was included as a function of the balcony width.

Finally, during 2020 and 2021 people in England were forced to spend more time at home, and so would have been using their private balconies as their outdoor space. The effect of this on the fire load density is unclear, as 44% of the balconies surveyed through Google Street View had images taken in 2020.

C1-4. Results

A total of 1020 balconies throughout England were surveyed using the method described. It should be noted that the images from Google Street View were of varying ages, ranging from July 2008 to November 2020, and these images are from throughout the year. Appendix IX provides additional result graphs to those presented in this section.

C1-4.1 Observations

For the balconies surveyed, there were some key observations made on their use. The most common height of buildings surveyed was four storeys tall, with 70% of the balconies surveyed being on buildings five storeys tall or less. Overall, the surveyed balconies were 61% cantilevered, 35% recessed, and there were 41 balconies being a combination of the two. The balcony type and building heights are shown in Figure C1-2. It is observed that 43% of the balconies had no furniture or other contents, as indicated in Figure C1-3, 22% had a small table with one or two chairs of various materials, 16% had either a clothes airer or washing line, and 20% of balconies had plant pots.

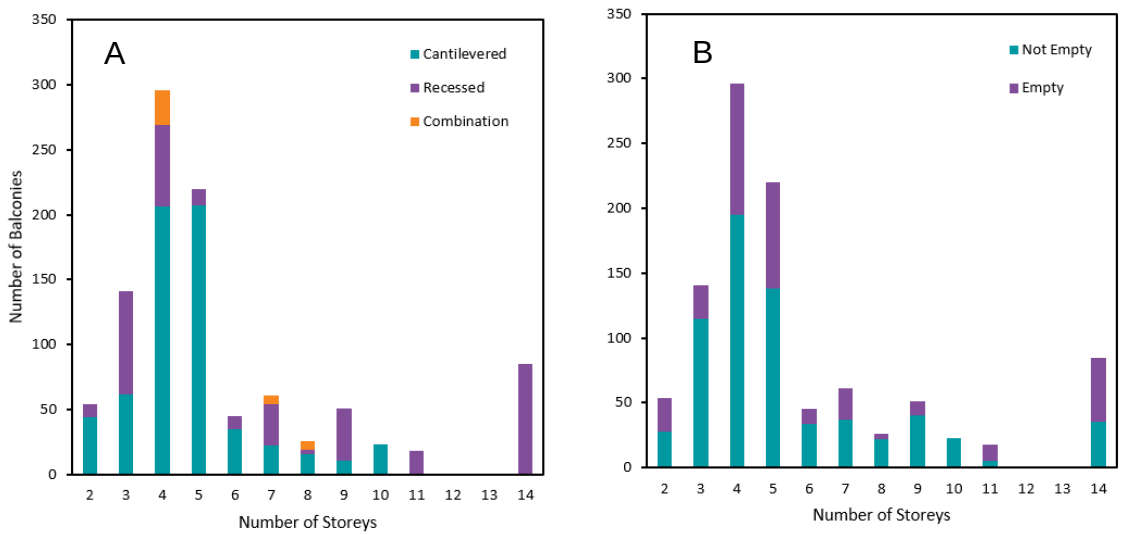

Figure C1-2 a) Balcony type varying with building storey height, b) Empty and non-empty balconies varying with storey height

C1-4.2 Fire load energy density

The main results of this survey and assessment relate to the fire load energy density, FLED, of balconies in England. The average FLED was found to be 67.4 MJ/m^2, with an 80th percentile value of 110 MJ/m^2, as shown in Table C1-3. This is 8.7% and

12.7% of the average and 80th percentile FLED for a dwelling, at 780 MJ/m^2 and 870 MJ/m^2 respectively [33].

As 43% of the balconies were empty, they had a FLED of 0 MJ/m^2. The highest recorded FLED was 1,666 MJ/m^2, though this was due to a small wooden table and chairs set being located on a very small balcony, and so resulted in a high FLED despite a comparatively low total energy. The highest total fire load on a balcony was 3,570 MJ, due to the presence of a small wooden shed, a wooden wardrobe and some plastic boxes, but due to it being a reasonably large balcony of 7.5 m^2, the resultant FLED was 476 MJ/m^2, though this value was still greater than the 95th percentile.

Of the 1020 balconies surveyed, 1018 had a FLED of less than 700 MJ/m^2, and the cumulative distribution of the balconies is shown in Figure C1-3. The FLED can be characterised by a truncated normal probability distribution function with μ = 67.5 MJ/m^2 and σ = 114.4 MJ/m^2.

Table C1-3 Fire load results for all balconies surveyed

Total no.	Mean (MJ/m^2)	Standard deviation (MJ/m^2)	80% (MJ/m^2)	90% (MJ/m^2)	95% (MJ/m^2)
1020	67.4	114.3	110	181	273

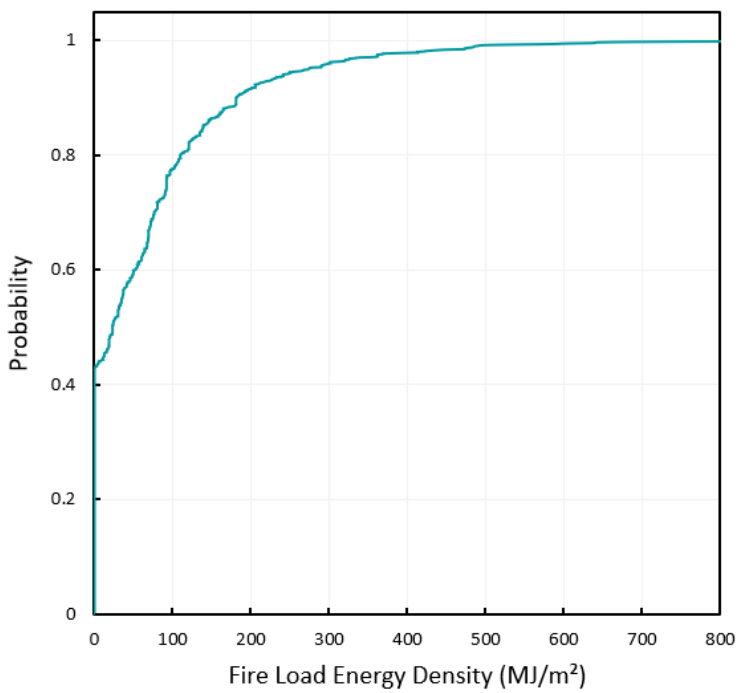

Figure C1-3 Cumulative distribution function of fire load energy density

For interest, while it is skewing the data, if the empty balconies are removed the mean FLED is 118.1 MJ/m^2 and the 80th percentile 178.9 MJ/m^2 which is still below the FLED of most occupancies [1].

With a recorded average FLED of 67 MJ/m^2, this result is 30% of the recorded FLED of 223 MJ/m^2 determined in the survey by Kose et al. [4] of Japanese dwellings, with the average fire load measured by Kose et al. being equal to the 93rd percentile fire load in this survey. There could be multiple reasons for this, including:

- Year of survey completion,
- Social differences in the use of living spaces,
- Economic differences in the residential dwelling locations,
- Differences in climate in Japan and England leading to different balcony uses,
- A sample size in this survey is seven times greater than the Japanese survey allowing for a more accurate population representation, and
- This survey was completed by one person, rather than relying on dwelling occupants to list contents. Having a single person carry out the survey would provide a greater level of consistency.

Further investigation would be required to better understand why the differences between the results exist, such as using the method followed for this survey on Japanese balconies.

C1-4.3 Heat release rate

Determination of heat release rate of the items was based on the concept that the peak heat release rate of a balcony would be the sum of the peak heat release rates of the balcony contents. Heat release rates were taken from the SFPE handbook, specifically the chapter on Heat Release Rates by Babrauskas [34]. These heat release rates, based on generally well-ventilated full-scale experiments, allowed the heat release rate values to be determined for some contents without the presence of external wind. For other items, such as the small wooden table, the heat release rate was estimated to be equivalent to that of a small wooden chair, based on the similar weight and physical shape. To determine the heat release rate per unit area, a similar method has been used as outlined for the fire load in Section C1-3.2. The mean heat release rate density is 105 kW/m^2, and the 80th percentile is 173 kW/m^2, for comparison the range of 320-570 kW/m^2 [1] would be considered appropriate for residential dwellings. While this is a crude assessment method, it provides an insight as to the heat release rate of the balcony contents. Figure C1-4 shows the cumulative distribution function of heat release rate per unit area. The probability distribution is a truncated normal distribution with μ = 117 kW/m^2 and σ = 232 kW/m^2.

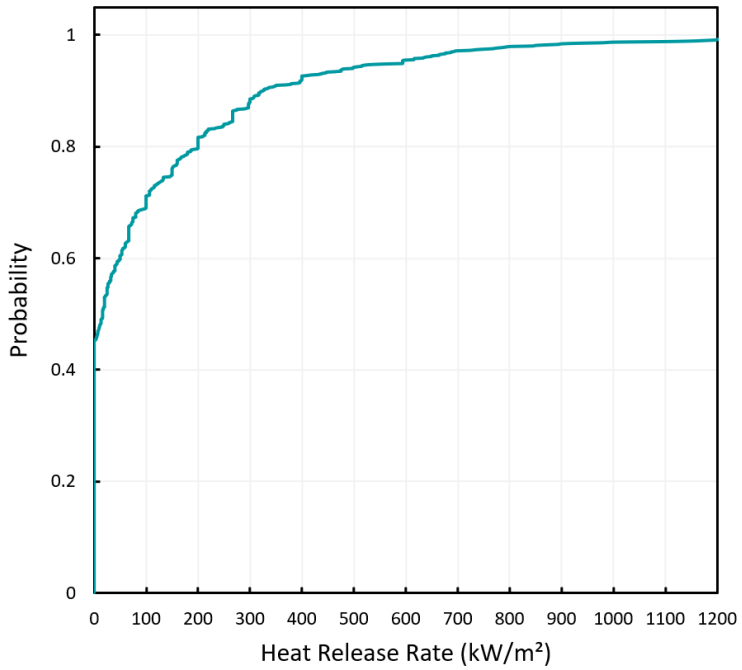

Figure C1-4 Cumulative distribution function of heat release rate per unit area

When modelling fires using their peak heat release rate, another key property for the fire is the growth rate. There are 'standard' growth rates that are applicable for different building descriptions, as outlined in BS 9999:2017 [35]. Further values from PD 7974-1:2019 [1] give growth rates for wood frame chairs as 0.008-0.017 kW/s^2, and for office furniture as 0.012 kW/s^2. Although some balconies are used for storage which may suggest that a 'Fast' fire growth rate be applied, it is noted that stacked boxes and shelves appeared on less than 5% of the balconies surveyed, and the arrangement of the storage is generally not comparable to a storage room. Therefore, based on the observed contents of balconies, a 'Medium' fire growth rate of 0.012 kW/s^2 is suggested.

C1-4.4 Fuel sources for a 'representative balcony'

The average fire load density presented previously is the average of the 1020 individual balcony fire load energy densities, the representative balcony discussed within this section incorporates the average number of items on the balconies, and the total fire load these items provide.

The contents of the representative balcony have been determined by an average of all the contents of the surveyed balconies. For example, with respect to wooden chairs, over the 1020 balconies surveyed, there were a total of 176 wooden chairs, giving the representative balcony 0.158 wooden chairs. The representative balcony also had 0.155 loads of laundry (on either clothes airers or washing lines) and 0.878 plant pots. This process was repeated for all recorded items and the contents

present were classified as being either plastic-based or wood-based to determine a percentage make up for the fuels present.

The representative balcony based on the survey conducted has a width of 2.85 m and depth of 1.3 m, there is a total fire load of 234 MJ, where 179 MJ of that is from plastic-based materials, and 54.5 MJ from wooden contents. This means that the fuel composition of the balconies in terms of energy is 77% plastic and 23% wood, and the FLED is 63 MJ/m^2, i.e., similar to the previously determined average of 67.4 MJ/m^2.

Taking a heat of combustion for plastic as 46 MJ/kg, and for wood as 20 MJ/kg the fire load is equivalent to around 3.90 kg of plastic and 2.75 kg of wood, a ratio of approximately 60% plastic to 40% wood by mass. Compared to indoor living spaces this is a higher ratio of plastic to wood than was recorded in the survey by Bwalya et al. [7] which resulted in a ratio of 33% plastic to 66% wood. This difference in material ratio may be due to conservative assumptions, such as all plant pots present being plastic, or may be due to plastic furniture being more weather-proof and suitable for outdoor use.

C1-4.5 Cantilevered vs recessed balconies

An initial hypothesis was that recessed balconies may have a higher fire load as these balconies are more protected from the weather. A small number of the balconies observed were a combination of recessed and cantilevered, and these have not been included within this comparison. Results comparing the average and 80th percentile for both balcony types are given in Table C1-4, and show that the fire load energy density for cantilevered balconies was higher than that for the recessed balconies although the difference is not found to be statistically significant.

Table C1-4 Fire load results for cantilevered and recessed balconies

Balcony type	No.	Mean (MJ/m^2)	80% (MJ/m^2)	Standard deviation (MJ/m^2)	Difference to mean (MJ/m^2)	Difference to 80% (MJ/m^2)
All areas	1020	67.4	110.2	114.3		
Cantilevered	618	69.6	120.6	121.9	+3.3%	+9.7%
Recessed	353	65.2	92.3	114.1	-3.3%	-16.2%

C1-4.6 London vs elsewhere

Outside London, the proportion of housing within a postcode that is a flat or apartment, which are more likely to have a balcony, is on average 17% of the housing type. However, within Inner London on average 71% of the dwelling types are flats [31]. Due to this large difference in housing distribution, and the differences

in Social Grade as outlined the data has been compared in terms of London vs Outside of London. During the survey, only 17% of the balconies were within London, as the aim was to ensure a wide range of balcony locations for the overall survey.

Table C1-5 shows the average and 80th percentile FLED for the balconies and indicates that the FLED within London is over 40% greater than the average for all balconies. It was determined that the balcony fire load density within London is statistically significantly higher than the balcony fire load for outside of London, with the average and 80th percentile for within London being 1.6 (i.e., 95.9 MJ/m^2 vs. 61.4 MJ/m^2) and 1.7 (i.e., 183.2 MJ/m^2 vs. 105.4 MJ/m^2) times greater than the respective values for outside of London.

Table C1-5 Fire load results for London vs rest of England

Balcony type	No.	Mean (MJ/m^2)	80% (MJ/m^2)	Standard deviation (MJ/m^2)	Difference to mean (MJ/m^2)	Difference to 80% (MJ/m^2)
All areas	1020	67.4	110.2	114.3	-	-
Within London	178	95.9	183.2	110.3	+42.3%	+66.2%
Outside of London	842	61.4	105.4	114.4	-8.9%	-4.4%

C1-4.7 Effect of Social Grade

The effect of Social Grade on the FLED of a balcony has been examined. Following the defined bands of Social Grade, the fire loads of the balconies within the various postcodes have been compared. As discussed in Section C1-3.4, the characteristics of the Social Grades are taken from the Market Research Society following the results of the 2011 Census [32].

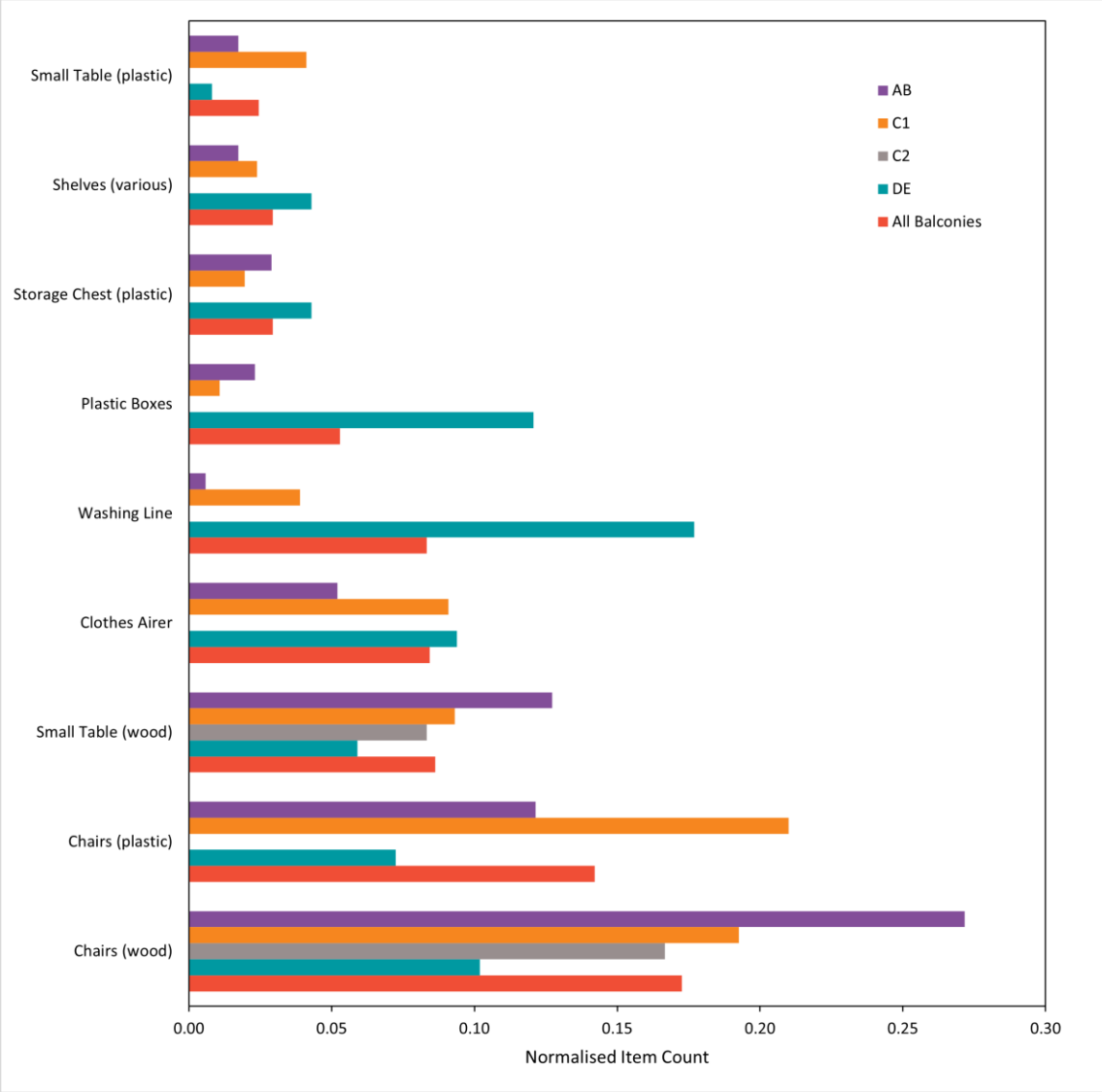

Figure C1-5 Normalised balcony content count of most common items for the different Social Grades

The survey data shows that areas of Social Grade DE are twice as likely to have a washing line present on the balcony, compared to the England as a whole, and 1.5 to 2 times more likely to have shelves and storage boxes present. Figure C1-5 shows a normalised count of the most common combustible items for each social grade, where the total count for each item is divided by the number of balconies within each Social Grade. This allows interrogation and comparison of the variation in balcony contents, for example Social Grade AB was 1.5 times more likely to have wooden furniture on the balcony than the average.

It was initially hypothesised that the balconies within lower Social Grades might have a higher FLED, however the results indicate that the higher Social Grades had higher FLED, with the 80th percentile FLED for Social Grade AB is 129 MJ/m^2, compared to 92 MJ/m^2 for Social Grade DE. This is due to wooden furniture being twice as common on balconies with Social Grade AB when compared to Social

Grade DE, and the fire load associated with wooden furniture is greater than that associated with storage boxes. The results for the FLED for different Social Grades are outlined in Table C1-6 and it was found that there is no statistical significance of Social Grade on the balcony FLED.

Table C1-6 Fire load energy density results depending on Social Grade

Balcony type	No.	Mean (MJ/m^2)	80% (MJ/m^2)	Standard deviation (MJ/m^2)	Difference to mean (MJ/m^2)	Difference to 80% (MJ/m^2)
All areas	1020	67.4	110.2	114.3	-	-
AB	173	77.9	129.1	155.8	+15.6%	+17.2%
C1	462	66.4	120.6	95.9	-1.5%	+9.4%
C2	12*	15.7*	19.3*	32.3*	-76.7%*	-82.5%*
DE	373	65.5	92.0	114.1	-2.8%	-16.5%

*As only 12 balconies were surveyed within Social Grade C2, these results cannot be deemed to be representative of the Social Grade.

C1-4.8 Trigger heights

In Approved Document B [36]and BS 9991:2015 [37] there are specified building heights that trigger different fire safety measures. The effect of the building height on the FLED was also investigated. For this comparison the building heights have been estimated as: the number of storeys minus one storey, multiplied by a storey height of 3.2 m [38]. This is consistent with building height being considered as the height from ground level to the floor level of the topmost occupied storey.

Table C1-7 compares the fire loads on balconies using trigger heights of 11 m, 18 m, and 30 m, as outlined in ADB and BS 9991, and indicates that buildings within the 18 to 30 m bracket had an average fire load density 32.6% higher than for all the balconies considered together. This is a statistically significant higher FLED than for other height categories.

The fire load has been estimated using the same methodology for all buildings however in tall buildings only the fire load on balconies on the lower floors was visible using Google Street View due to the viewing angle.

Table C1-7 Fire load results depending on building height

Total number of storeys	Trigger height, h (m)	No.	Mean (MJ/m^2)	80th percentile value (MJ/m^2)	Standard deviation (MJ/m^2)	Difference to mean for all combined (MJ/m^2)	Difference to combined 80th percentile value (MJ/m^2)
	All heights	1020	67.4	110.2	114.3	-	-
< 4	h < 11	491	62.7	111.0	92.6	-7.0%	+0.7%
5 to 6	11 < h < 18	265	70.2	110.7	139.8	+4.2%	+0.5%
7 to 10	18 < h < 30	161	89.4	159.1	132.4	+32.6%	+44.4%
> 11	h > 30	103	49.0	92.0	100.9	-27.3%	-16.5%

C1-4.9 Balcony areas

Over the balconies surveyed, there were a range of balcony sizes, though 77% of the balconies surveyed were less than 5 m^2. While it was found that generally larger balconies have a greater fire load overall, the FLED decreases as the balcony area increases, as indicated in Figure C1-6. Table C1-8 below shows how the average FLED changes with balcony area, showing that the FLED for the 460 balconies smaller than 2.5 m^2 was 22% greater than the overall average FLED. It is determined to be statistically significantly larger than the fire load density for balconies greater than 2.5 m^2.

Table C1-8 Fire load results depending on balcony area

Balcony area (m^2)	No.	Mean (MJ/m^2)	80% (MJ/m^2)	Standard deviation (MJ/m^2)	Difference to mean (MJ/m^2)	Difference to 80% (MJ/m^2)
All balconies	1020	67.4	110.2	114.3	-	-
< 2.5	460	81.9	135.2	147.2	+21.5%	+22.7%
> 2.5	560	55.5	96.7	75.6	-17.7%	-12.2%
2.5 to 5	325	56.4	100.9	78.5	-16.4%	-8.5%
5 to 7.5	170	56.4	99.1	77.5	-16.3%	-10.0%
7.5 to 10	33	45.5	90.4	58.7	-32.5%	-17.9%
10 to 15	23	46.1	75.4	32.6	-31.7%	-31.6%
15 +	9	34.3	62.2	36.3	-49.1%	-43.6%

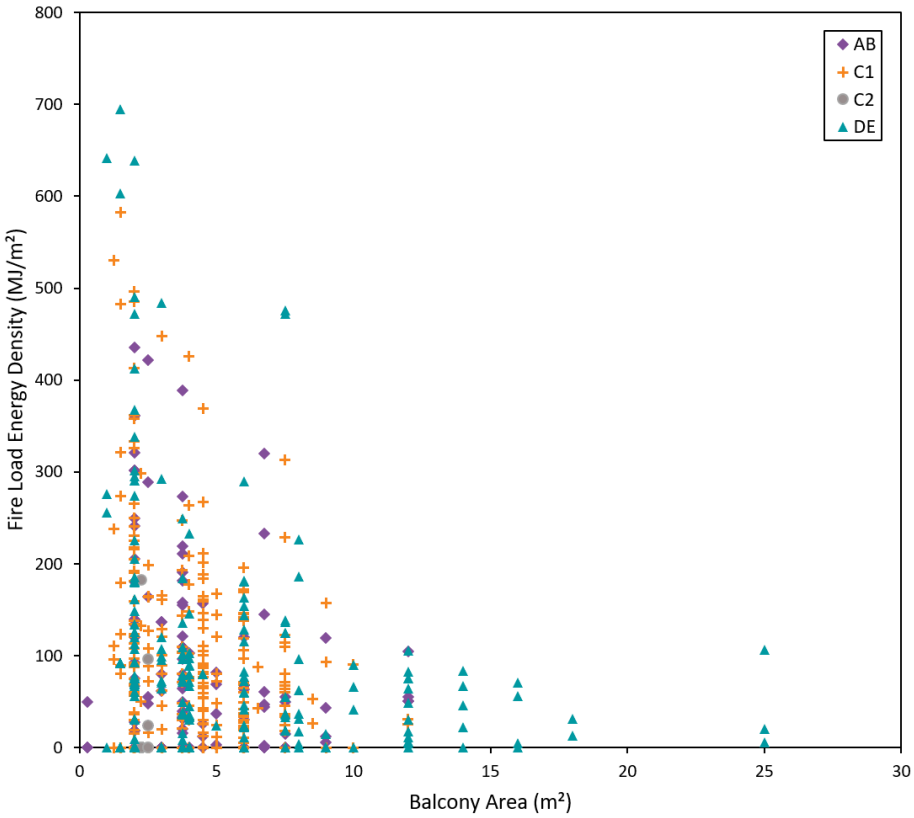

Figure C1-6 Fire load energy density against balcony area with Social Grade

C1-4.10 Time of year

Google Street View shows the date that the image was taken. For the 67 postcodes surveyed, there were a range of months and years from July 2008 to November 2020. By noting the time of year in which images were taken, it allows an understanding of whether the data collected is representative of balconies year-round, rather than just being observed in certain months. Throughout the year, the

average fire load was observed to range from 54.2 MJ/m^2 in the second quarter, to 75.1 MJ/m^2 in the fourth quarter, as shown in Table C1-9. This is counter to an initial hypothesis that fire load would be greater within summer months when the weather makes it more favourable to place things outside on a balcony. However, as only 6% of the balconies were observed in the first quarter of the year, the smaller sample may not be representative.

Table C1-9 Fire load results depending on time of year from Google Street View images

Time of year	No.	Mean (MJ/m^2)	80% (MJ/m^2)	Standard deviation (MJ/m^2)	Difference to mean (MJ/m^2)	Difference to 80% (MJ/m^2)
All year	1020	67.4	110.2	114.3	-	-
Jan – Mar	66	70.0	142.4	112.1	+3.9%	+29.2%
Apr – Jun	154	54.2	92.0	90.0	-19.6%	-16.5%
Jul – Sept	570	67.6	107.6	107.0	+0.3%	-2.4%
Oct – Dec	230	75.1	110.7	143.4	+11.4%	+0.5%

The images from Google Street View were also taken in different years, with 69% of the images being taken since 2018, and 5% being taken earlier than 2013, with the number of balconies surveyed in each year noted in Table C1-10.

Table C1-10 FLED results depending on year from Google Street View images

Time of year	No.	Mean (MJ/m^2)	80% (MJ/m^2)	Standard deviation (MJ/m^2)	Difference to mean (MJ/m^2)	Difference to 80% (MJ/m^2)
All Time	1020	67.4	110.2	114.3	-	-
2008	6	70.2	131.0	58.8	+4.2%	+18.9%
2009	4	30.1	96.4	45.6	-55.3%	-12.5%
2012	43	61.2	107.6	89.1	-9.2%	-2.4%
2014	199	37.7	80.4	61.7	-44.1%	-27.0%
2015	22	74.3	92.0	145.5	+10.2%	-16.5%
2017	39	30.8	72.3	50.6	-54.3%	-34.4%
2018	116	94.1	172.7	152.4	+39.6%	+56.7%
2019	140	58.8	92.0	94.4	-12.8%	-16.5%
2019 and earlier	569	57.4	92.0	127.9	-14.9%	-16.5%
2020	451	80.0	138.6	127.9	+18.7%	+25.8%

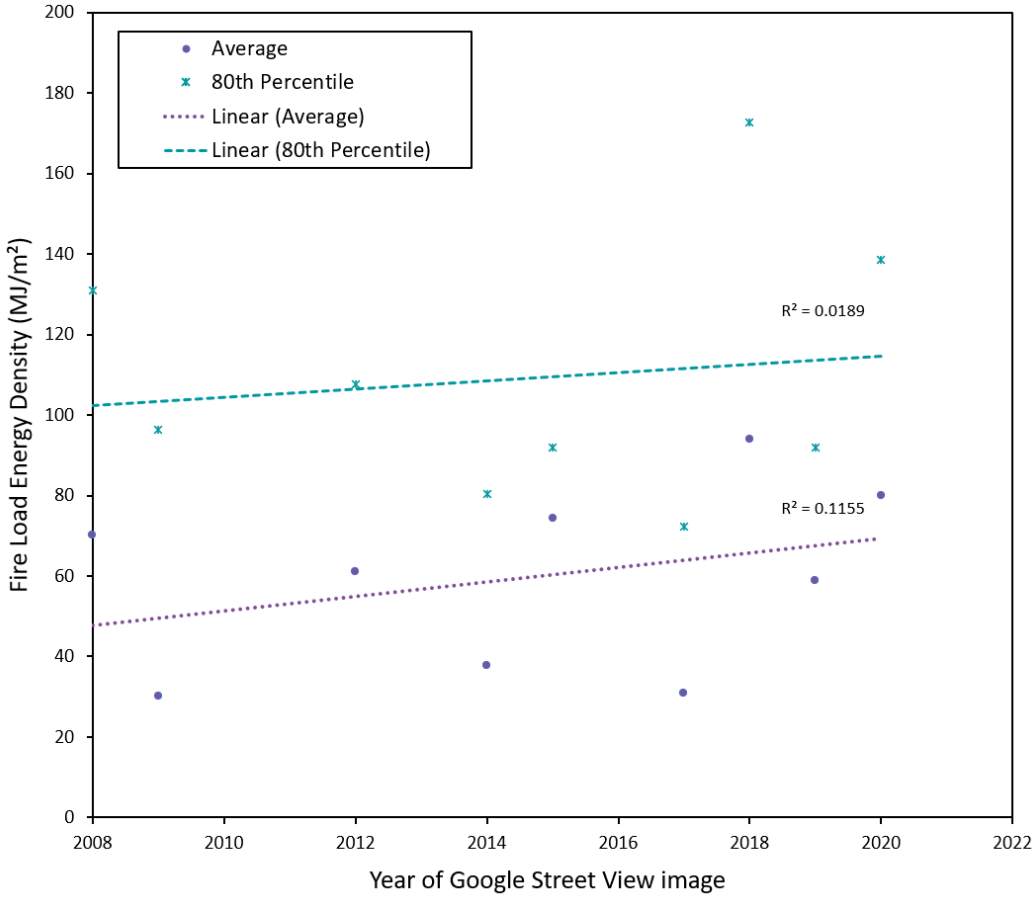

Figure C1-7 Average fire load energy density over time

Over the 12 years, the general trend appears to be that the fire load on balconies has been increasing, as indicated in Figure C1-7, however due to the scatter within the data (illustrated by the low R^2 values), caution should be exercised drawing year-on-year comparisons. To further determine the extent of how the fire load changes over time, it may be possible to use the previous images in Google Street View to survey the same streets in previous years.

Statistical analysis has been completed to compare the fire load of balconies in images taken from 2020, to images taken in 2019 and earlier, and it is found that in 2020, the average FLED of the balconies has significantly increased from an average of 57 MJ/m^2 to 80 MJ/m^2 for earlier years, and 80th percentile values from 92 MJ/m^2 to 139 MJ/m^2, an increase of 40% and 51% respectively.

C1-5. Conclusions

From guidance notes produced by London Fire Brigade and insurance companies, it is clear that from their perspective the ideal fire load on a private residential balcony is zero, and that balconies should not be used for storage. However, it has been observed through the balcony fire load survey presented in this study that there is often combustible material present on balconies. It is unclear whether building use should be limited, or building design should be updated to allow for additional balcony uses. It is therefore reasonable to ask whether balconies should instead be designed to account for a fire load and to limit fire spread to one single balcony, rather than limit how people can use their own private external space beyond what is typically acceptable.

With an average FLED of 64.4 MJ/m^2, and an 80th percentile of 110 MJ/m^2 for a balcony, these results are 8% and 11% of the respective values for a dwelling, with a mean of 780 MJ/m^2 and 80th percentile of 870 MJ/m^2 [33]. This fire load has been determined from a range of balconies throughout the year. It should be noted that this determination of the fire load of balcony does not include the fire load associated with balcony construction, or any smaller items that could contribute to a fire load, such as paper and disposable barbeques.

It has also been found that the balcony FLEDs within London are 1.6 to 1.7 times higher than the FLEDs outside of London, and that this is statistically significant. Furthermore, it has been found that Social Grade has no statistically significant impact on the average FLED. Other comparisons on balcony fire load have been explored including the impact of building height, season, year, and balcony size. It was found that buildings between 18 m and 30 m in height have a statistically significant higher FLED than other heights, and that balconies smaller than 2.5 m^2 have a statistically significant higher FLED than balconies larger than 2.5 m^2.

From the recorded contents from the 1020 balconies surveyed, the average contents of a ‘representative balcony’ have been determined, as well as the content material. This representative balcony is found to have dimensions of 2.85 m wide and of 1.3 m deep and a total fire load of 233.7 MJ, where 179.2 MJ of that is from plastic-based materials, and 54.5 MJ from wooden contents. This means that the fuel composition by mass on balconies is 60% plastic and 40% wood and has a FLED of 63 MJ/m^2. The average peak heat release rate for this representative balcony has been estimated as 105 kW/m^2, with an 80th percentile of 173 kW/m^2 with a Medium growth rate of 0.012 kW/s^2.

Further work on the subject could be completed by examining how balcony fire loads for buildings have changed over time, using the history function of Google Street View, and how the Social Grades calculated using the 2021 census results compare.

C1-6. References

[1] BSI, ‘PD 7974-1:2019 Application of fire safety engineering principles to the design of buildings. Initiation and development of fire within the enclosure of origin (Sub-system 1)’, BSI, London, 2019.

[2] P. H. Thomas, ‘Design guide: Structure fire safety CIB W14 Workshop report’, Fire Saf. J., vol. 10, no. 2, pp. 77–137, Mar. 1986, doi: 10.1016/0379-7112(86)90041-X.

[3] C. Culver and J. Kushner, ‘A program for survey of fire loads and live loads in office buildings’, National Bureau of Standards, NBS Technical Note 858, May 1975.

[4] S. Kose, Y. Morishita, S. Matsunobu, and K. Kawagoe, ‘Survey of movable fire load In Japanese dwellings’, in Fire Safety Science - Proceedings of the Second International Symposium, 1988, pp. 403–412.

[5] C. Thauvoye, B. Zhao, J. Klein, and M. Fontana, ‘Fire load survey and statistical analysis’, Fire Saf. Sci., vol. 9, pp. 991–1002, Jan. 2009.

[6] Bwalya, A., Sultan, M., and Benichou, N., ‘A pilot survey of fire loads in Canadian homes’, National Research Council Canada, 159, 2004.

[7] Bwalya, A., Lougheed, G., Kashef, A., and Saber, H., ‘Survey results of combustible contents and floor areas in multi-family dwellings’, Institute for Research in Construction Fire Research Program, 253, Oct. 2008.

[8] N. Elhami-Khorasani, J. Gustavo Salado Castillo, E. Saula, T. Josephs, G. Nurlybekova, and T. Gernay, ‘Digitized fuel load survey methodology using machine vision’, NFPA, Dec. 2019.

[9] M. Spearpoint, M. Tohir, A. Abu, and P. Xie, ‘Fire load energy densities for risk-based design of car parking buildings’, Case Stud. Fire Saf., vol. 3, pp. 44–50, 2015, doi: 10.1016/j.csfs.2015.04.001.

[10] Babrauskas, V., ‘Tables and Charts’, in Fire Protection Handbook, 17th ed., National Fire Protection Association, 1991.

[11] Building Specifier, ‘Britain sees increase in number of high rise buildings’, buildingspecifier.com, Apr. 11, 2018. https://buildingspecifier.com/britain-sees-increase-in-number-of-high-rise-buildings/ (accessed Jan. 17, 2022).

[12] D. Aydin and G. Sayar, ‘Questioning the use of the balcony in apartments during the COVID-19 pandemic process’, Emerald Insight, pp. 51–63, Nov. 2020.

[13] J. Brown and E. Kirk-Wade, ‘Coronavirus: A history of English lockdown laws’, House of Commons Library, Dec. 2021. Accessed: Feb. 11, 2022. [Online]. Available: commonslibrary.parliament.uk

[14] Mayor of London, ‘London Housing Design Guide’, London Development Agency, Aug. 2010. [Online]. Available: www.london.gov.uk/sites/default/files/interim_london_housing_design_guide.pdf

[15] Greater London Authority, The London Plan: The spatial development strategy for greater London. Greater London Authority, 2021. [Online]. Available: www.london.gov.uk/sites/default/files/the_london_plan_2021.pdf

[16] Mayor of London, ‘London Plan Guidance - Housing Design Standards - Consultation Draft’, Greater London Authority, London, Draft, Feb. 2022.

[17] C. Holland, M. Shipp, and D. Crowder, ‘Fire safety issues with balconies’, BRE Global, Watford, UK, 2016.

[18] AliDeck, ‘Balcony Fires of Great Britain Report: 2017-2020’. Accessed: Jan. 17, 2022. [Online]. Available: www.alideck.co.uk/balcony-fires-report/balcony-fires-report-2017-2020/

[19] AliDeck, ‘Balcony Fires of Great Britain Report: 2020-2021’. Accessed: Jan. 17, 2022. [Online]. Available: www.alideck.co.uk/balcony-fires-report/balcony-fires-report-2020-2021/

[20] Metropolitan Fire Brigade, ‘Post incident analysis report’, Melbourne, Australia, Report No: 1403134A, 2014.

[21] P. Britton, ‘Fire alarm systems were operational and activated at blaze-hit Northern Quarter tower block’, Manchester Evening News, Manchester, Jan. 03, 2018. Accessed: Jan. 14, 2022. [Online]. Available: www.manchestereveningnews.co.uk/news/greater-manchester-news/fire-alarm-systems-were-operational-14109692

[22] D. Price, ‘Poplar fire spread “due to timber balconies”, not ACM’, Construction News, Jun. 02, 2021. www.constructionnews.co.uk/buildings/poplar-fire-spread-due-to-timber-balconies-not-acm-02-06-2021/ (accessed Jan. 14, 2022).

[23] London Fire Brigade, ‘Fire Safety Guidance Note: Fires involving balconies in Residential Premises - Information for Housing Providers, Residents Groups and Individual Residents’, London Fire Brigade, GN95, Jan. 2020.

[24] MHCLG, ‘Advice for Building Owners of Multi-storey Multi-occupied Residential Buildings’. Jan. 2020.

[25] AVIVA, ‘Balcony and Terrace Safety: Residential Buildings’. AVIVA, May 14, 2020.

[26] ‘Our guide to balconies and fire safety’, Leeds & Yorkshire Housing Association. Accessed: Nov. 09, 2021. [Online]. Available: www.lyha.co.uk/sites/default/files/Balcony%20fire%20safety%20flyer%20PDF.pdf

[27] London Fire Brigade, ‘Don’t be the cause of a balcony blaze, warn firefighters’, Jun. 02, 2020. www.london-fire.gov.uk/news/2020-news/may/don-t-be-the-cause-of-a-balcony-blaze-warn-firefighters/

[28] Welsh Government, ‘Advice Note on Balconies on Residential Buildings’. Welsh Government, Jul. 14, 2020. Accessed: Dec. 07, 2020. [Online]. Available: gov.wales/sites/default/files/publications/2019-07/fire-risks-of-flats-with-balconies-guidance.pdf

[29] ‘When was my house built?’, propertysolvers.co.uk. www.propertysolvers.co.uk/blog/when-was-my-house-built/ (accessed Jan. 06, 2022).

[30] Office for National Statistics, ‘Quick Statistics - Social Grade’, Jun. 03, 2021. webarchive.nationalarchives.gov.uk/ukgwa/20160202162549/http://www.nomisweb.co.uk/census/2011/qs613ew (accessed Jun. 03, 2021).

[31] Office for National Statistics, ‘Quick Statistics - Dwellings’, Office for National Statistics, Jun. 03, 2021. webarchive.nationalarchives.gov.uk/ukgwa/20160202162933/https://www.nomisweb.co.uk/census/2011/qs418ew (accessed Jun. 03, 2021).

[32] The Market Research Society, ‘2011 Census Results’, Market Research Society, Jun. 03, 2021. https://www.mrs.org.uk/geodemographic/census (accessed Jun. 03, 2021).

[33] J. Schleich and L.-G. Cajot, ‘Valorisation Project - Natural Fire Safety Concept’, Profil Arbed, Luxembourg, 2001.

[34] V. Babrauskas, ‘Heat release rates’, in SFPE Handbook of Fire Protection Engineering, 5th ed., Springer, 2016.

[35] BSI, ‘BS 9999:2017 Fire safety in the design, management and use of buildings. Code of practice’, BSI, London, 2017.

[36] HM Government, ‘The Building Regulations 2010, Approved Document B (Fire Safety) Volume 1 (2019 edition, as amended May 2020)’, 2020.

[37] BSI, ‘BS 9991:2015 Fire safety in the design, management and use of residential buildings. Code of practice’, BSI, London, 2015.

[38] OPDC, ‘Tall Building Statement’. Mayor of London, Jun. 2018. [Online]. Available: www.london.gov.uk/sites/default/files/52._tall_buidings_statement_2018.pdf

[39] B&Q, ‘Wooden Extendable Table’, diy.com. www.diy.com/departments/virginia-wooden-extendable-table/5059340124643_BQ.prd (accessed Jul. 07, 2021).

[40] B&Q, ‘Wooden Table’, diy.com. https://www.diy.com/departments/denia-wooden-table/1829923_BQ.prd (accessed Jul. 07, 2021).

[41] B&Q, ‘Wooden Recliner Chair’, diy.com. www.diy.com/departments/denia-wooden-recliner-chair/1561083_BQ.prd (accessed Jul. 07, 2021).

[42] B&Q, ‘Wooden Chair, Pack of 2’, diy.com. www.diy.com/departments/virginia-wooden-chair-pack-of-2/5059340124612_BQ.prd (accessed Jul. 07, 2021).

[43] ‘B&Q Homepage’, diy.com. diy.com (accessed Jul. 05, 2021).

[44] B&Q, ‘wayfair.co.uk’. wayfair.co.uk (accessed Jul. 05, 2021).

[45] Robert Dyas, ‘robertdyas.co.uk’, https://www.robertdyas.co.uk/. www.robertdyas.co.uk/ (accessed Jul. 05, 2021).

[46] Currys, ‘Washing Machine Capacity Guide’. Currys.co.uk. [Online]. Available: www.currys.co.uk/gbuk/techtalk/washing-machine-capacity-guide/

[47] buyshedsdirect.co.uk, ‘buyshedsdirect.co.uk’. buyshedsdirect.co.uk (accessed Jul. 05, 2021).

[48] amazon.co.uk, ‘amazon.co.uk’, amazon.co.uk. amazon.co.uk (accessed Jul. 05, 2021).

[49] continental-tires.com, ‘continental-tires.com’, continental-tires.com. www.continental-tires.com/bicycle/tires/mountainbike-tires/ruban (accessed Jul. 05, 2021).

[50] wickes.co.uk, ‘wickes.co.uk’, wickes.co.uk. wickes.co.uk

[51] V. Babrauskas, ‘Combustion of Mattresses exposed to flaming ignition sources Part II. Bench-scale tests and recommended standard test’, Feb. 1981.

Appendix I – Surveyed urban areas

The table below outlines the surveyed urban areas, and the number of balconies recorded in each area. The number of stories for the buildings surveyed have been noted, and the range of building heights are outlined below.

Urban area	Number of balconies	Lowest storey	Highest storey	Mode storey	Average storey
York	66	4	5	4	4
Sunderland	5	2	3	3	3
Nottingham	88	2	3	3	3
Hull	99	5	14	5	9
Doncaster	58	14	14	14	14
Sheffield	67	4	4	4	4
Bristol	101	4	11	5	6
Swindon	8	3	3	3	3
Reading	25	4	5	5	5
Slough	62	5	10	5	7
Croydon	53	4	5	4	4
Southampton	71	3	9	7	6
Brighton	14	7	7	7	7
Hackney	27	3	4	3	3
City of London	98	3	9	5	6
Southend-on-Sea	19	2	4	2	3
Chatham	29	4	4	4	4
Cambridge	10	4	5	5	5
Exeter	23	4	6	5	5
Basingstoke	27	2	3	3	3
Manchester	32	6	8	8	8
Liverpool	8	5	9	5	7
Bolton-upon-Dearne	4	2	2	2	2
Hollywood	18	3	3	3	3
West Bromwich	8	4	4	4	4

Appendix II – Example balconies

The images below show some examples of building types and the balconies observed during the survey.

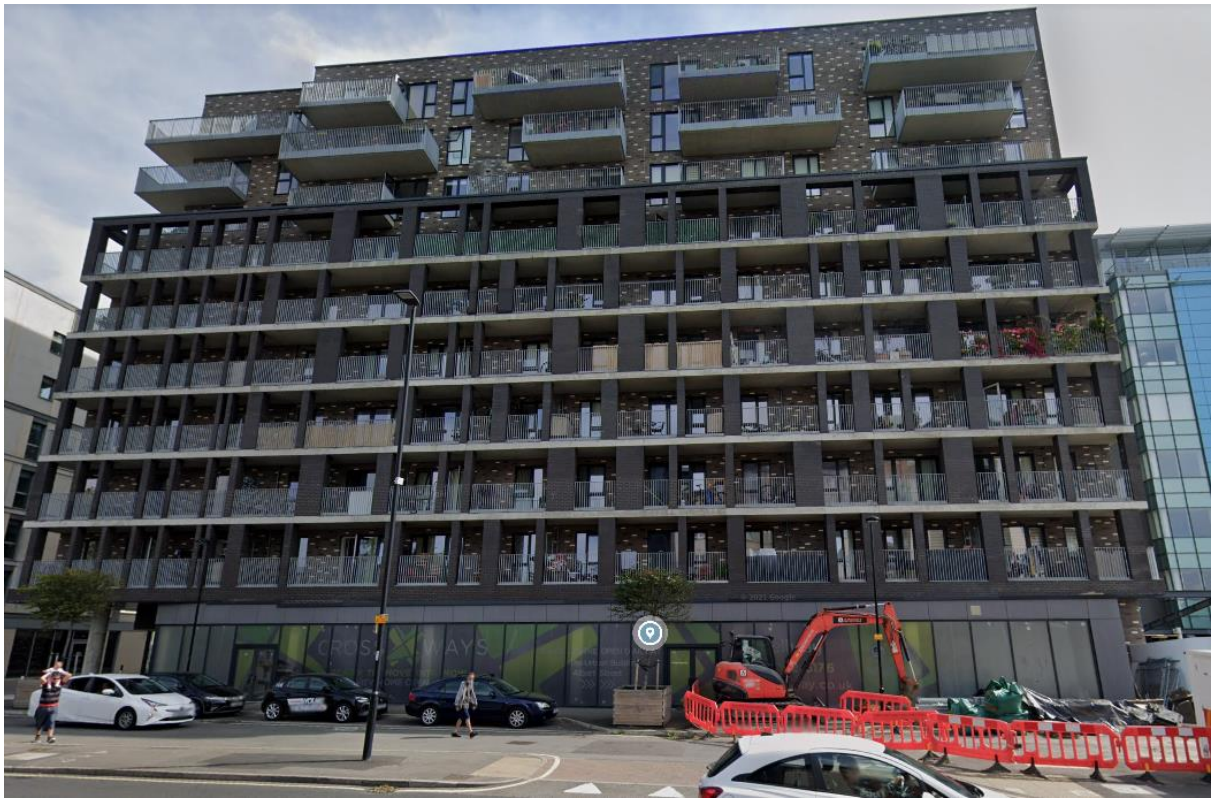

Figure II-1 Image of balconies on high rise building in Slough

Figure II-2 Image of balconies on terraced houses in Southend-upon-Sea

Figure II-3 Image of balconies on low rise building located in Swindon

Appendix III – Data collection

This table shows an example of how the data collected during the surveys was recorded, with a total of 35 different content items recorded.

Urban area	Postcode	Approx. age	No. stories	Width	Depth	Recessed / cantilevered	Small table (wood)	Chair (wood)	Small table (plastic)	Chair (plastic)	Clothes airer	Plastic boxes
York	YO1 9PP	2000s	5	2	1	Cantilevered						
York	YO1 9PP	2000s	4	3	2	Cantilevered		2				
York	YO1 7PD	2010s	4	1.5	1	Cantilevered	1	2			1	
York	YO1 7PD	2010s	4	1.5	1	Cantilevered						
Nottingham	NG7 1HH	2000s	2	4	1.5	Recessed	1					1
Nottingham	NG7 1HH	2000s	3	5	1.5	Recessed				2		
Bristol	BS5 0FJ	2010s	4	3	1.5	Mix of both						
Bristol	BS5 0FJ	2010s	4	2.5	1.5	Mix of both						

Urban area	Postcode	Approx. age	No. stories	Width	Depth	Recessed / cantilevered	Small table (wood)	Chair (wood)	Small table (plastic)	Chair (plastic)	Clothes airer	Plastic boxes
Sheffield	S3 7GG	1960s	4	4	1.5	Cantilevered					1	
Sheffield	S3 7GG	1960s	4	4	1.5	Cantilevered					1	
London	E16 1AR	1990s	9	4	1.5	Recessed	1	2			1	
London	E16 1AR	1990s	9	4	1.5	Recessed						

Appendix IV – Fire load calculations

When determining the calorific output of the materials located on the balconies, the mass of the material was not known, and was estimated as an average for the various different forms of fire load. This method is similar to the method followed by Bwalya et al. [6] where the actual contents could not be weighed, and so representative values for mass and calorific values for items were taken.

For example:

1) Figure IV-1 Four wooden chairs and a large wooden dining table on a balcony
2) shows the view of a wooden outdoor dining table, of unknown weight. To determine the calorific value for this, large external wooden tables were found on outdoor furniture websites with Figure IV-2 Examples of large wooden tables
3) showing two similar large wooden tables, with masses of 13.5 kg and 30 kg respectively [39], [40]. While a specific table within the Google Street View image may be more similar to one table than the other, the ‘average’ wooden table seen via Google Street View was taken as a mixture of the two tables.
4) This was repeated for the wooden chairs to give an average weight of 5.7 kg per chair [41], [42].
5) The calorific heat of combustion for wood was taken to be 20 MJ/kg from the SFPE handbook [10].
6) The mass of the table (22 kg) and the mass of the four wooden chairs (22.8 kg) was combined with the calorific value of wood, to determine the total fire load for that balcony.
7) The width and depth of the balconies were estimated based on the construction of the balcony. In this case to be approximately 2 m by 3 m.
8) The total fire load was divided by the approximated balcony size to determine a fire load density.

This method is outlined below using an example balcony shown below.

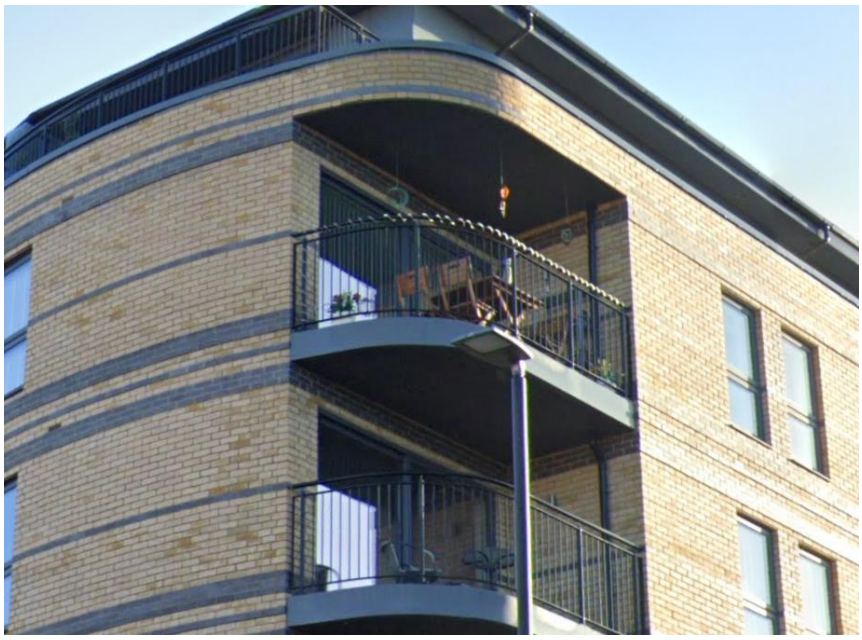

Figure IV-1 Four wooden chairs and a large wooden dining table on a balcony

Figure IV-2 Examples of large wooden tables

The total mass of wood on the balcony, table and four chairs is

$$22 + 4 \times 5.7 = 44.8 \text{ kg}$$

Thus, the calorific value of contents of balcony is

$$44.8 \times 20 = 896 \text{ MJ}$$

The fire load density for total balcony area is then determined as

$$\frac{896}{2 \times 3} = 149 \text{ MJ/m}^2$$

This method was repeated on all the balconies to determine a fire load density.

Appendix V – Balcony contents fuel properties

Balcony content	Material	Energy content (MJ)	Heat of combustion (MJ/kg)	Source	Item name	Item weight (kg)	Source	Item name	Item weight (kg)	Source	Notes	Heat of combustion per item (MJ)
Small Table (metal)	Steel	-	0	[10]	Blooma Bari Metal Table	6.9	[43]	Anne Garden Metal Side Table	4.5	[44]		0.0
Chairs (metal)	Steel	-	0	[10]	GoodHome Bari Brown Metal Armchair	3.0	[43]	GoodHome Saba Kaki Green Metal Foldable Chair	2.7	[43]		0.0
Bench (metal)	Steel	-	0	[10]	Aalena Steel Bench	15.4	[44]					0.0
Large Table (metal/metal and glass)	Steel	-	0	[10]	Ekon Bistro Table	10.7	[44]					0.0
Lounger (metal and plastic)			46.4	[10]	Batz Steel Grey Metal Sun Lounger	3.2	[43]					148.5
Small Table (wood)	Wood	-	20.0	[10]	Blooma Denia Wooden Table	13.5	[43]	Blooma Denia Wooden Table	5.0	[43]	Average of 9.3 kg per small wooden table taken	185.0
Chairs (wood)	Wood	-	20.0	[10]	GoodHome Kuatan Wooden Foldable Chair, Pack of 2	5.2 (each)	[43]	Virginia Wooden Chair, Pack of 2	6.3 (each)	[43]	Average of 5.7 kg per wooden chair taken	113.0
Bench (wooden)	Wood	-	20.0	[10]	Denia Wooden Natural Bench	19.2	[43]	Charles Taylor Traditional Two Seater Bench	40.0	[45]	Average of 29.6 kg per wooden bench taken	592.0
Large Table (wooden)	Wood	-	20.0	[10]	Blooma Denia Wooden Table	30.0	[43]	Virginia Wooden Extendable Table	13.5	[43]	Average of 22.0 kg per large wooden table taken	440.0
Small Table (plastic)	Polyethylene	-	46.4	[10]	Halimah Folding Plastic Side Table	2.5	[44]					117.8
Chairs (plastic)	Polyethylene	-	46.4	[10]	Memphis Stacking Garden Chair	2.9	[44]					134.5
Bench (plastic)	Polyethylene	-	46.4	[10]	Dragan Plastic Park Bench	10.0	[44]					463.7
Large Table (plastic)	Polyethylene	-	46.4	[10]	Livia Plastic Dining Table	6.8	[44]					315.3
Fabric Chair Cushion	FR Polyurethane Foam	-	24.5	[10]	Colardado Grey Metal Relaxer Chair (Cushion Only)	3.4	[43]				Heat of combustion based upon FR polyurethane foam cushion of density 30 kg/m^3	66.2

Balcony content	Material	Energy content (MJ)	Heat of combustion (MJ/kg)	Source	Item name	Item weight (kg)	Source	Item name	Item weight (kg)	Source	Notes	Heat of combustion per item (MJ)
Camping Chair	Cotton	-	18.4	[10]	Molloy Multicolour Metal Camping Chair	0.3	[43]				Based upon combustible fabric aspect of chair	4.6
Plant Pots	Polyethylene	-	46.4	[10]	Classico Plastic Plant Pot	1.3	[44]					60.3
Balustrade Screen	Polyethylene	-	46.5	[10]	Brown and Green Tarpaulin		[43]				Based upon density of tarpaulin at 0.2 kg/m^2	9.3
Washing Line	Cotton	-	18.4	[10]	Washing Load	7.5	[46]					138.0
Clothes Airer	Cotton	-	18.4	[10]	Washing Load	7.5	[46]					138.0
Shelf	Polyethylene	-	46.4	[10]	Form Links 5 Shelf Polypropylene Shelving Unit	14.9	[43]					692.8
Plastic Boxes	Polyethylene	-	46.4	[10]	Form Links 18 L Plastic Storage Box	0.5	[43]					23.2
Shed	Wood	-	20.0	[10]	Forest Garden 6x4 Apex Drip treated overlap wooden shed with floor	133.0	[43]					2660.0
Storage Chest (wooden)	Wood	-	20.0	[10]	Wooden Garden Storage Chest - Outdoor Patio Storage	26.4	[47]					528.0
Storage Chest (plastic)	Polyethylene	-	46.4	[10]	Heavy duty resin storage box	19.5	[45]					904.2
Shelves (wooden)	Wood	-	20.0	[10]	Form Symbios 5 shelf wooden shelving unit	17.2	[43]					344.0
Shelves (plastic)	Polyethylene	-	46.4	[10]	Form Links 5 Shelf Polypropylene Shelving Unit	14.9	[43]					692.8
Shelves (metal)	Steel	-	0.0	[10]	4 Shelf Steel Shelving Unit	4.8	[43]					
Bin (small)	Polyethylene	-	46.4	[10]	Addis Eco Plastic Waste Paper Office Bin	0.3	[48]					
	Paper	-	12.7	[10]	Mixed Paper Rubbish	1.0						28.0

Balcony content	Material	Energy content (MJ)	Heat of combustion (MJ/kg)	Source	Item name	Item weight (kg)	Source	Item name	Item weight (kg)	Source	Notes	Heat of combustion per item (MJ)
Bin (medium)	Polyethylene	-	46.4	[10]	Plastic 50 L Swing Bin Household	1.7	[48]					
	Paper	-	12.7	[10]	Mixed Paper Rubbish	2.5						110.63
Bin Bags	Clothes	-	18.4	[10]	Mixed clothes	4.0					Based on assumed containing of 4 kg clothes based on other materials on balcony	73.6
Adult Bike	Isoprene	-	44.9	[10]	Bike Tyres	1.7	[49]				Based on the combustible isoprene tyres	76.3
Child Bike	Isoprene	-	44.9	[10]	Bike Tyres	0.7	[49]				Based on the combustible Isoprene Tyres, comparably smaller than adult tires	31.4
Kids Toys	Polyethylene	-	46.4	[10]								185.5
Wooden Wardrobe	Wood	-	20.0	[10]	Cream Pine Double Wardrobe	40.0	[43]					800.0
Wooden Door	Wood		20.0	[10]	Pine Internal Door	18.0	[50]					360.0
Mattress	-	250	-	[51]								250.0

Appendix VI – Calculation of individual balcony fire load

Using the material properties calculated in Appendix IV and Appendix V, the fire load of each balcony was calculated using a method outlined in the table below.

		Small Table (wood)	Chair (wood)	Small table (plastic)	Chair (plastic)	Clothes airer	Plastic boxes		
Calorific Value (MJ/item)		185	113	118	135	138	56		
Postcode	**Balcony Area (m²)**							**Total Fire load (MJ)**	**Fire load density (MJ/m²)**
YO1 9PP	3							0	0
YO1 9PP	6		226					226	37.7
YO1 7PD	1.5	185	226			138		549	366.0
YO1 7PD	1.5							0	0

NG7 1HH	6						56	56	9.3
NG7 1HH	7.5				270			270	36.0
BS5 0FJ	4.5							0	0
BS5 0FJ	3.75							0	0
S3 7GG	6					138		138	23.0
S3 7GG	6					138		138	23.0
E16 1AR	6	185	226			138		549	91.5
E16 1AR	6							0	0

Appendix VII – Additional figures

Cantilevered vs recessed

The balcony contents and fire load density results were separated into two groups – for cantilevered and for recessed balconies.

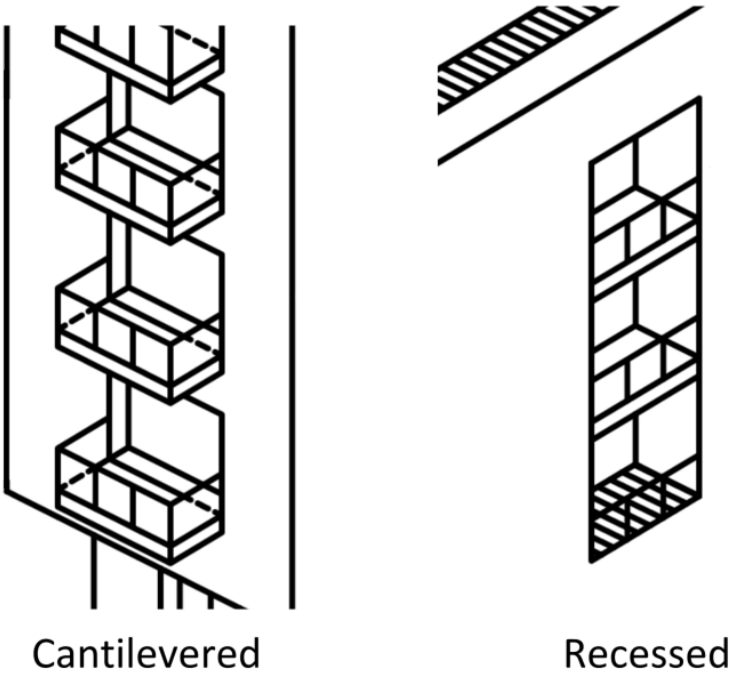

Figure VII-1 Cantilevered (projected) and recessed balconies, taken from BS 8579:2020

The cumulative and probability distributions of the two groups are shown in the graphs below as compared to the results for all the data as a group. It shows that the fire load density was higher for the cantilevered balconies, but also that there was a greater variance within the calculated fire load density.

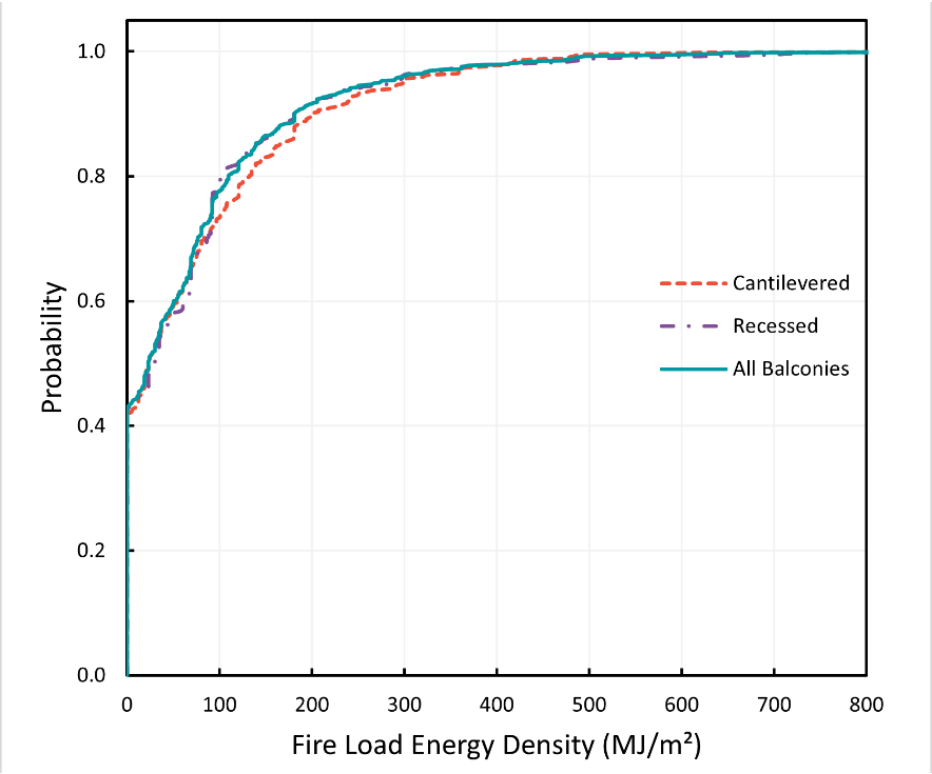

Figure VII-2 Cumulative distribution function for cantilevered and recessed balconies

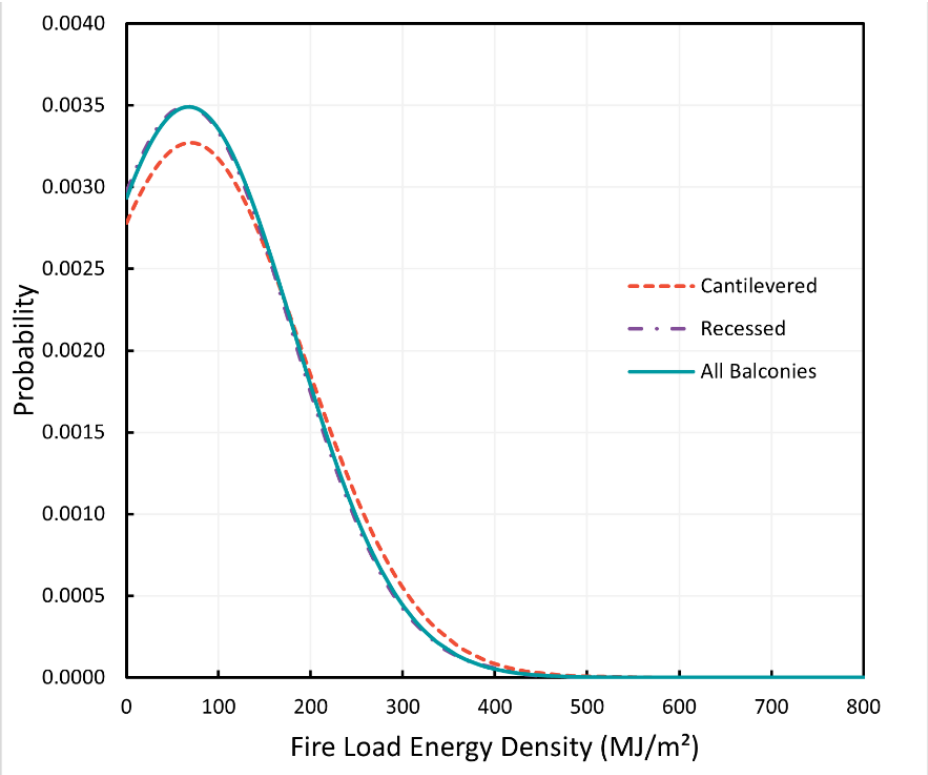

Figure VII-3 Probability distribution function for cantilevered and recessed balconies

London vs elsewhere

The data was collected and grouped into fire load densities for balconies within London, and balconies located elsewhere. The cumulative distribution graph shows that the fire load density for balconies within London was observed to be higher than that for balconies located elsewhere.

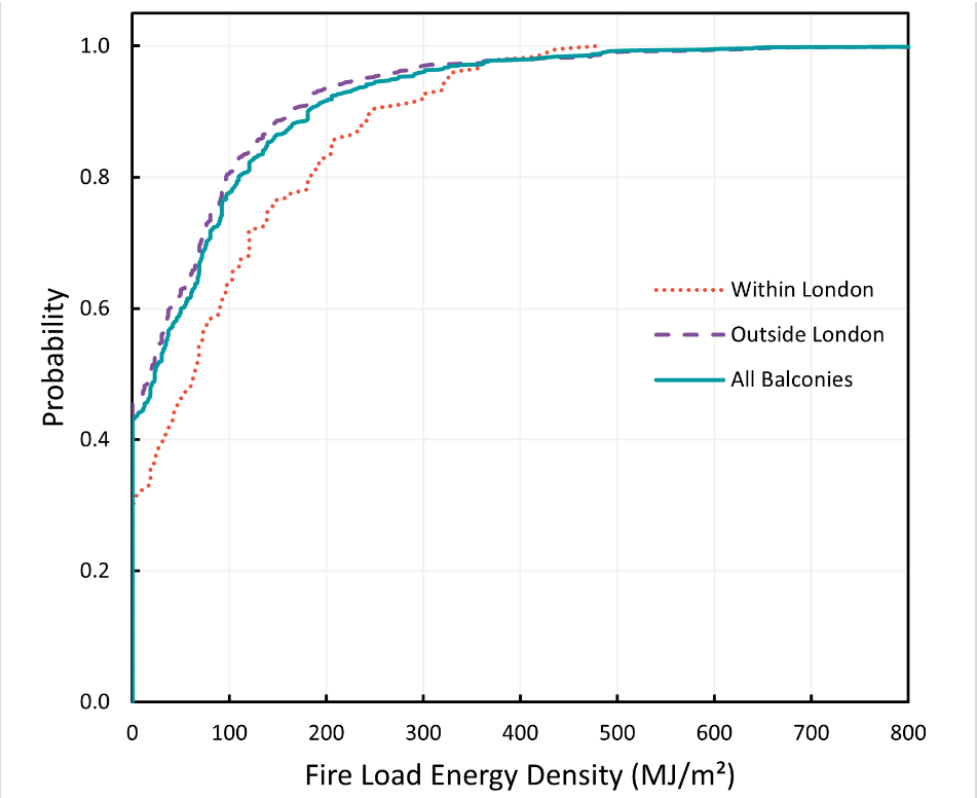

Figure VII-4 Cumulative distribution function for Inner London and rest of England fire loads results

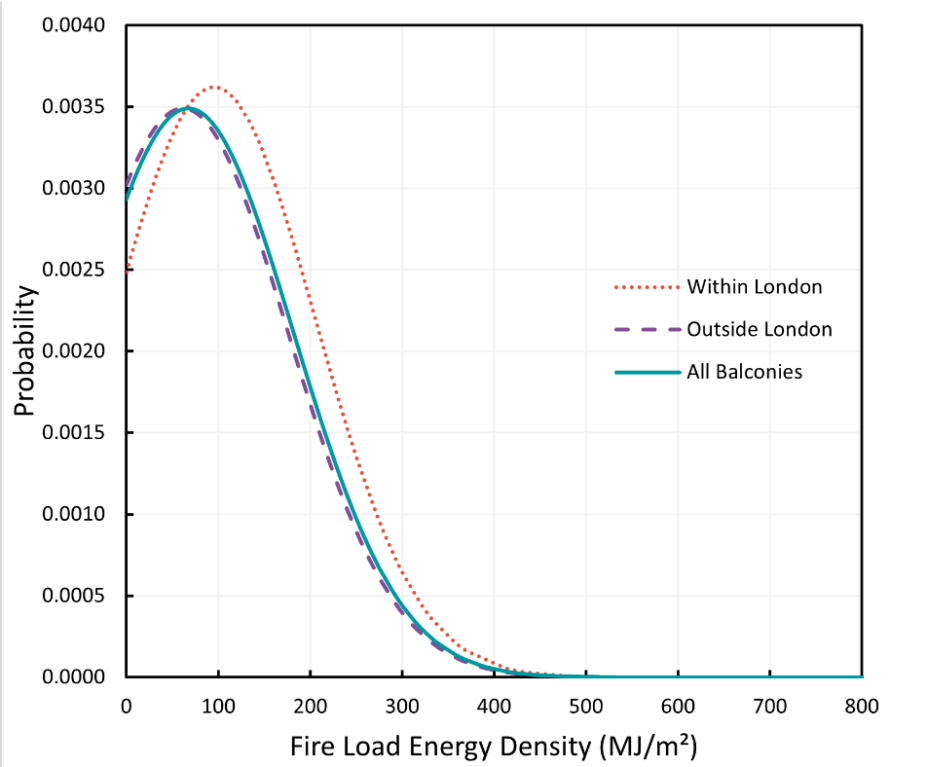

Figure VII-5 Probability distribution function for Inner London and rest of England fire loads results

Effect of Social Grade

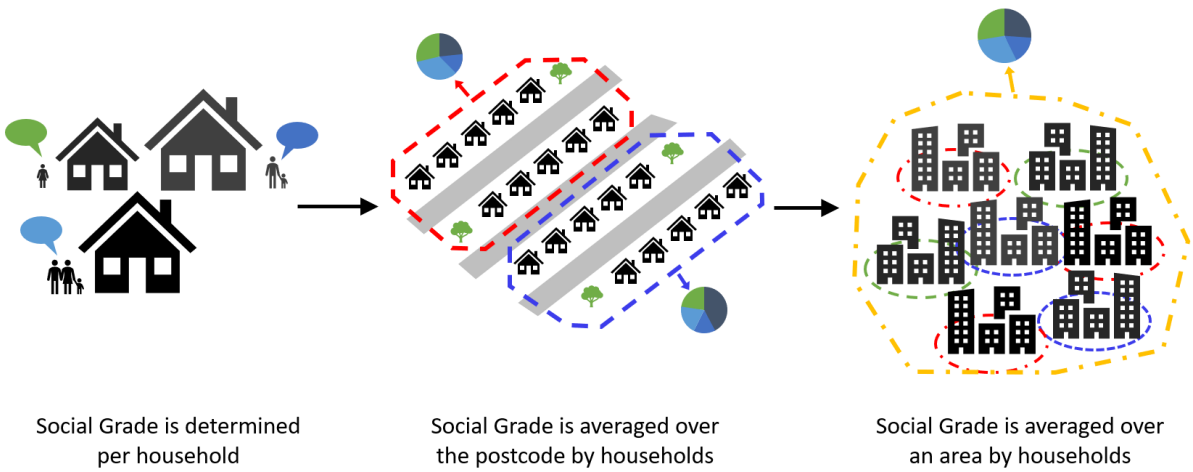

Figure VII-6 Illustration of how Social Grade of a postcode and city is determined

The comparative content count for the different Social Grade is shown below, and shows that Social Grades AB and C1 were more likely to have furniture on their balconies, but Social Grade DE was more likely to have shelves and boxes on the balcony.

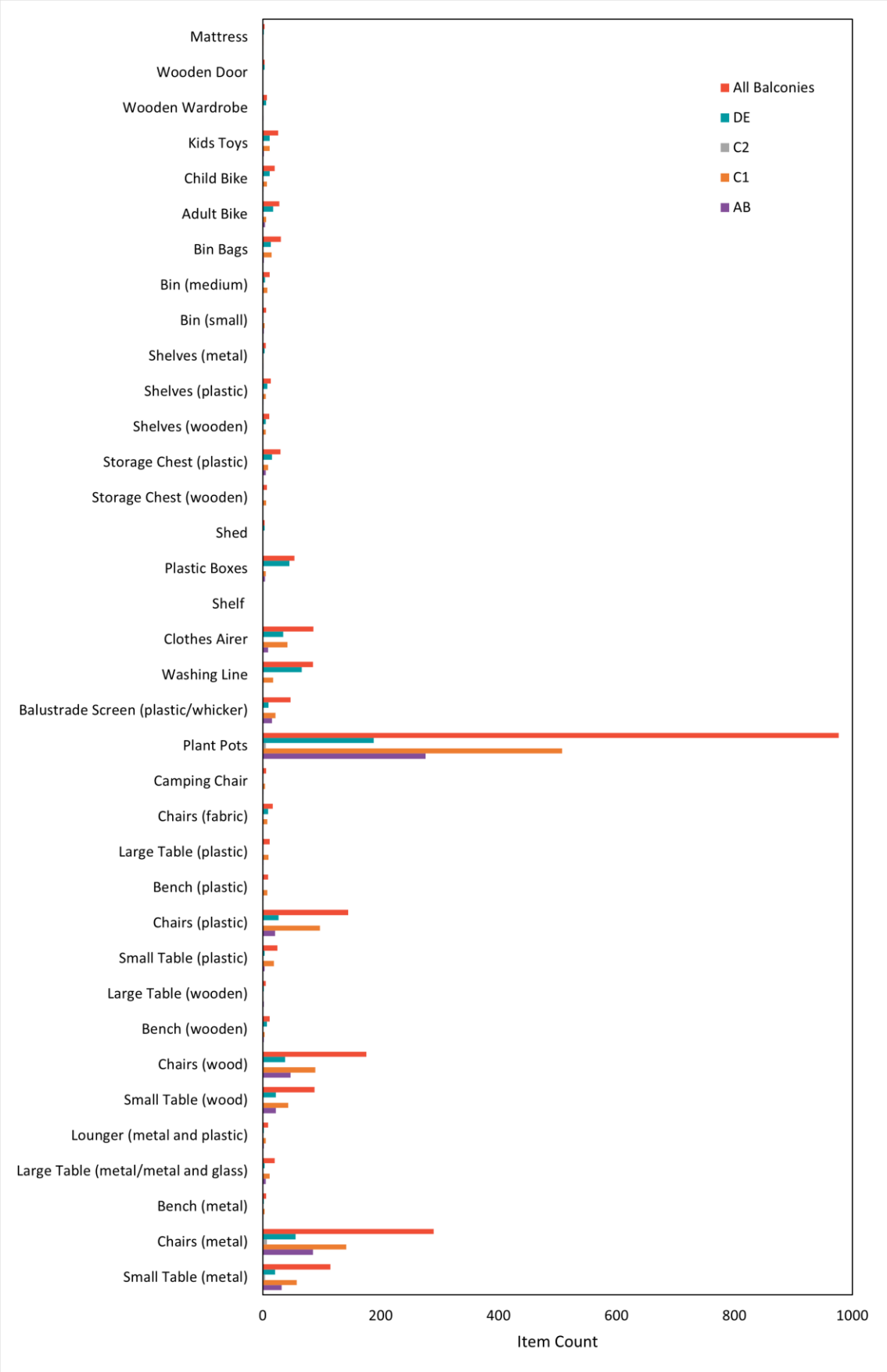

Figure VII-7 Balcony content count for Social Grades

The figure below shows the standardised item count, where the total item number has been compared to the Social Grade and overall sample size.

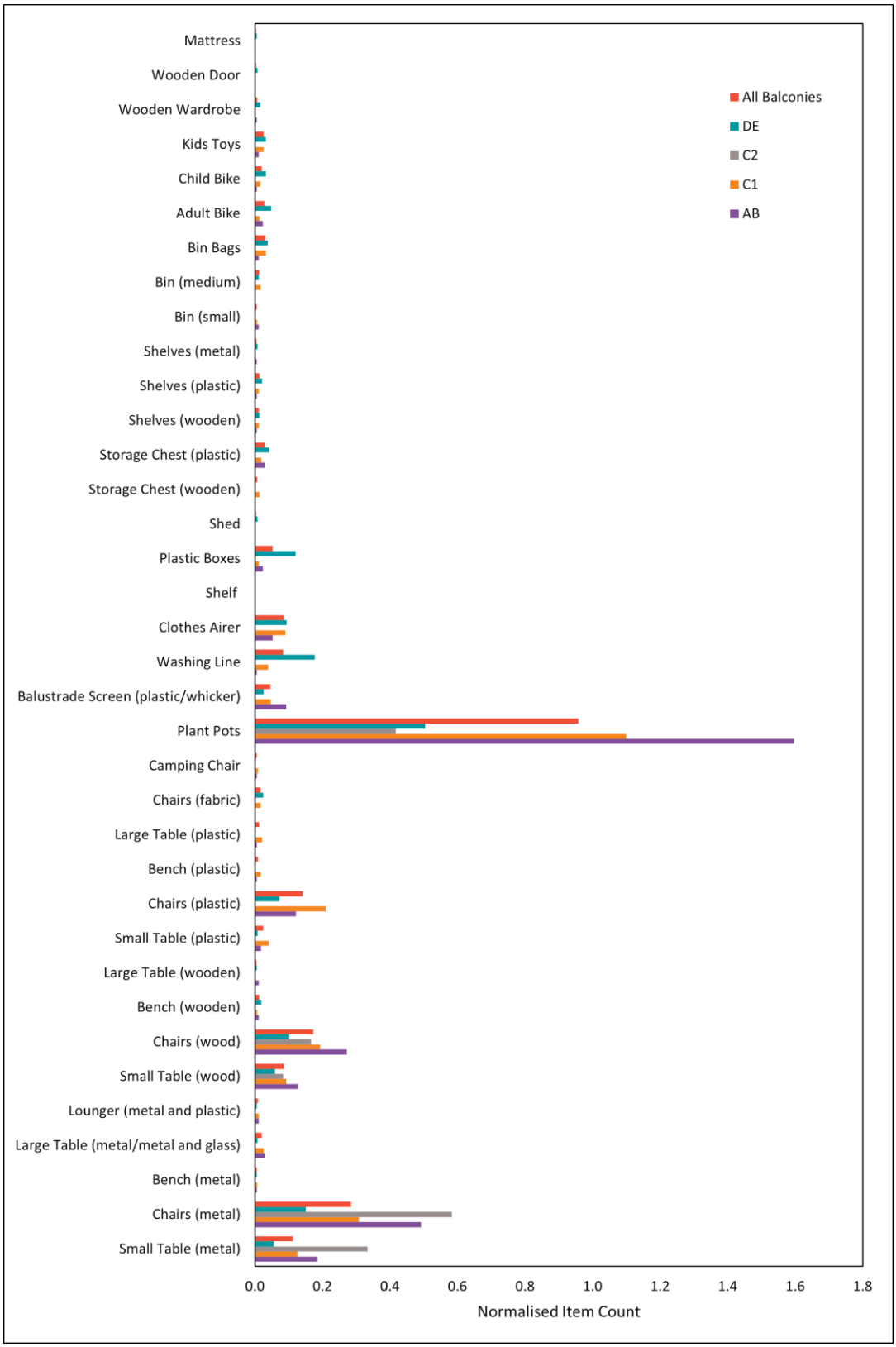

Figure VII-8 Normalised balcony content count for Social Grades

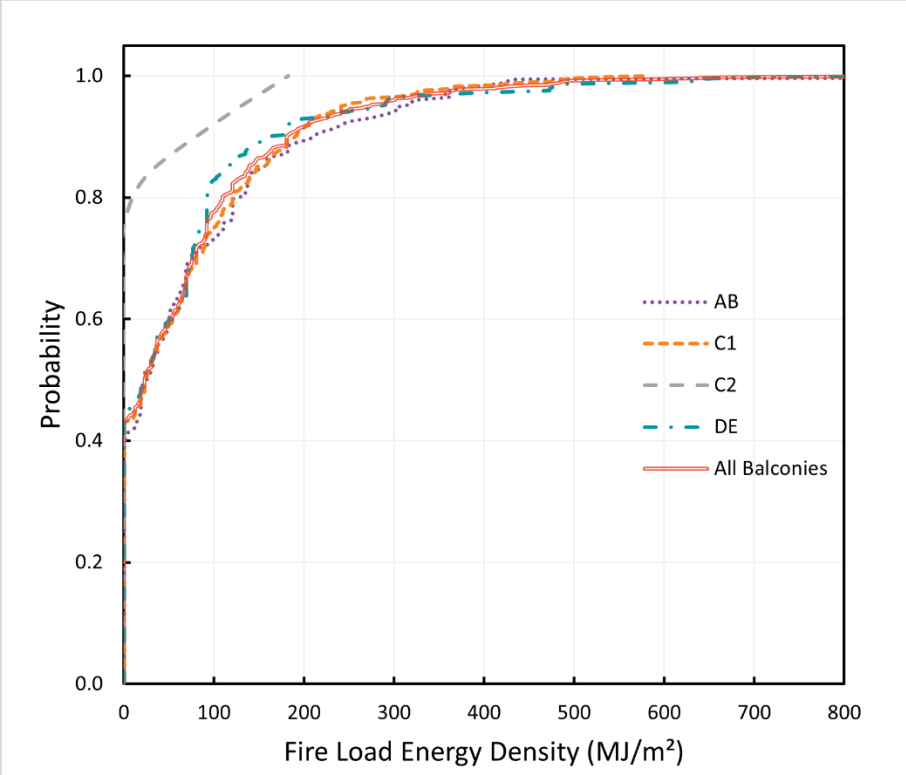

Figure VII-9 Cumulative distribution function for different Social Grades

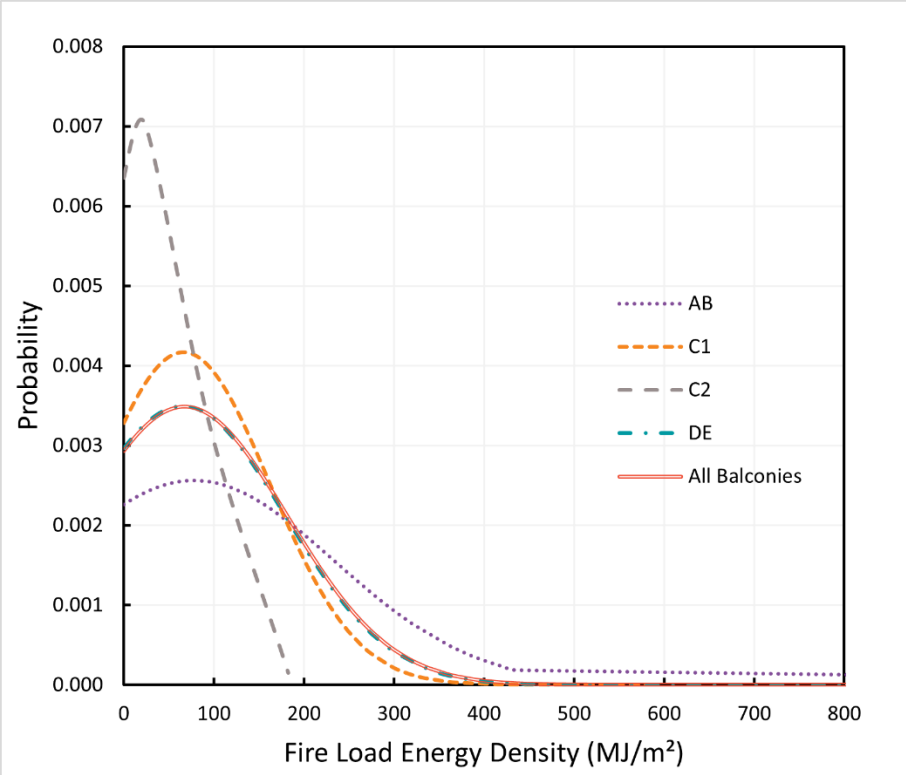

Figure VII-10 Probability density function for different Social Grades

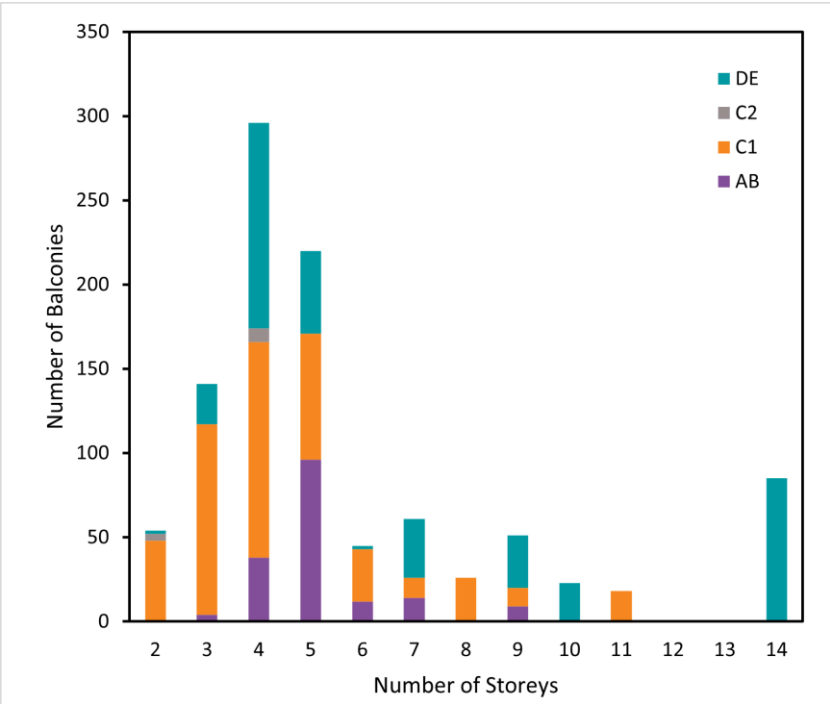

Figure VII-11 Social Grade variation of balconies vs building height

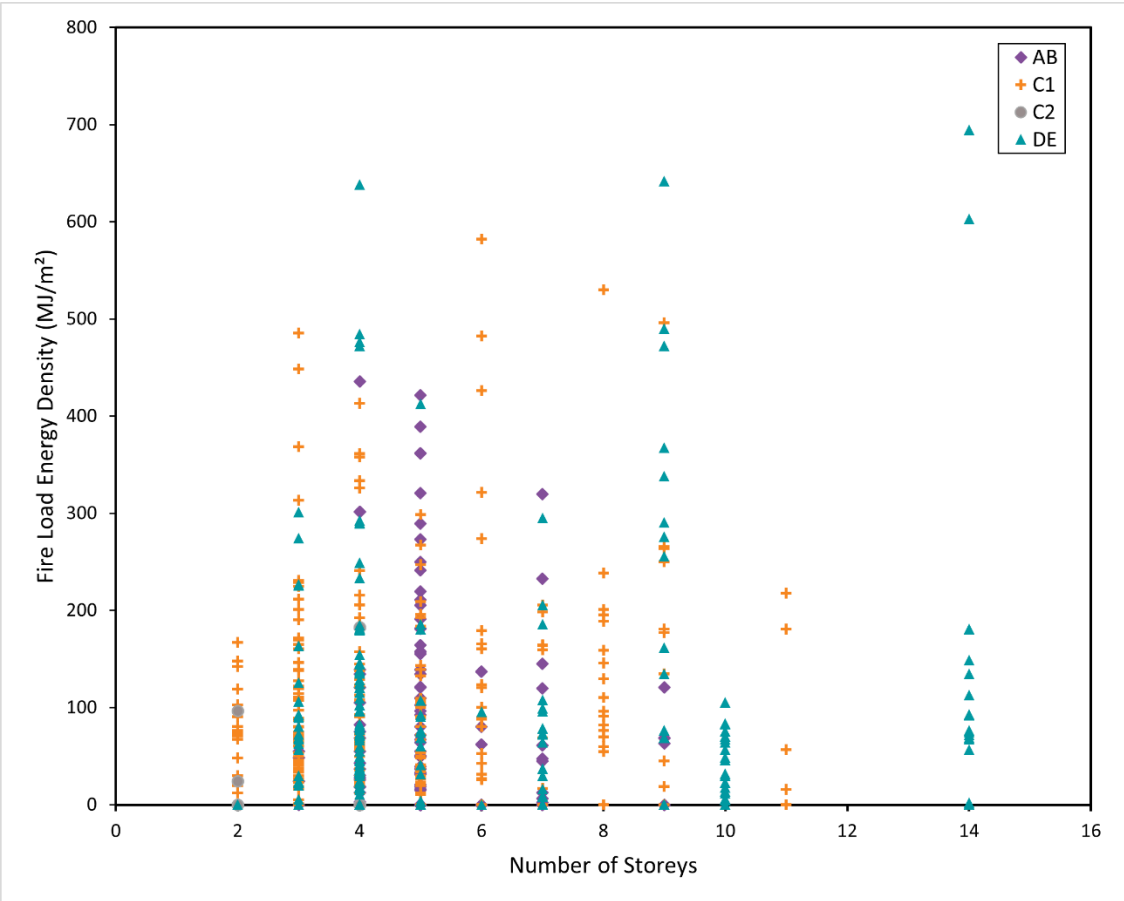

Figure VII-12 Fire load results for Social Grade vs building height

Time of year

Using the images and information available from Google Street View, the recorded fire load densities for varying times of year have been recorded. It should be noted that there are periods where there were no images on Google Street View, and so some periods have no recorded data.

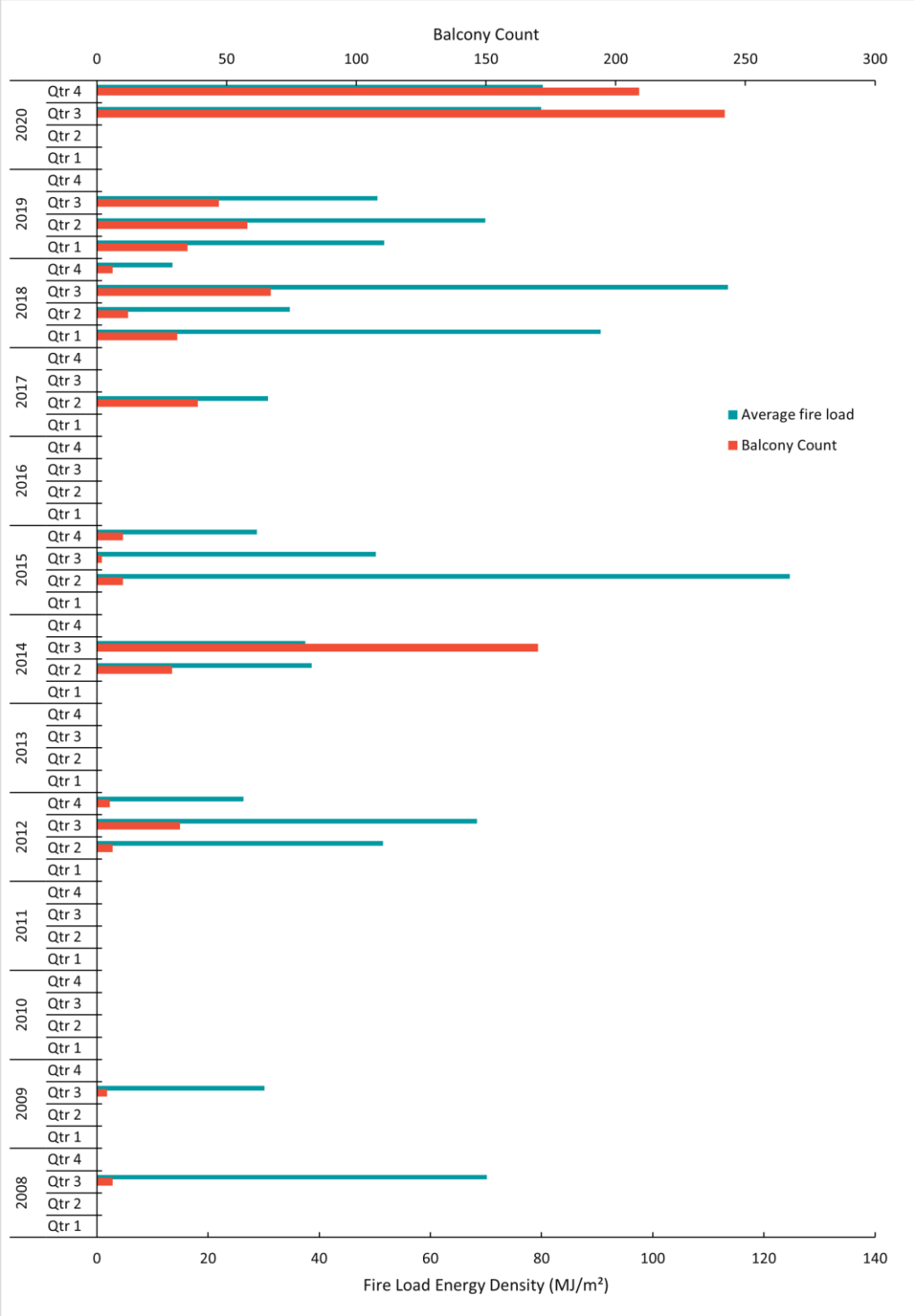

Figure VII-13 Average fire load and balcony count at different times of year

Appendix VIII – Statistical significance

For the various categories of data collected, the statistical significance of the different sub-groups has been calculated. Statistical significance was calculated using two-sample t-tests with unequal variances, using a two-tailed calculation method. For each test, the statistical significance is based on a null hypothesis of H_0=0.05. This means that if the resultant two-tailed probability, P(T ≤ t), is less than 0.05, the results of that subgroup are statistically significant in comparison to the remaining groups.

Cantilevered vs recessed

The 618 results for cantilevered balconies were compared to the 353 results for recessed balconies.

Table VIII-1 t-test results for cantilevered and recessed balconies

	Cantilevered	Recessed
Mean	73.7	70.1
Variance	14870.5	13042.1
Observations	618	353
Hypothesized Mean Difference	0	
df	773	
t Stat	0.4627	
P(T ≤ t) two-tail	0.6437	
t Critical two-tail	1.9630	

P(T ≤ t) = 0.6437 > H_o = 0.05, therefore the results are not statistically significant, meaning there is no statistical evidence that the fire load density for a cantilevered balcony is different to a recessed balcony.

London vs elsewhere

The 178 results for balconies within London were compared to the 842 results for balconies outside of London.

Table VIII-2 t-test results for London and Outside of London

	London	Outside London
Mean	95.6	61.4
Variance	12140.7	13079.0
Observations	178	842
Hypothesized Mean Difference	0	
df	264	
t Stat	3.7313	
P(T ≤ t) two-tail	0.0002	
t Critical two-tail	1.9690	

P(T ≤ t) = 0.0.002 < H_o = 0.05, therefore the results are statistically significant. This means there is statistical evidence that the fire load density for a balcony within London is significantly higher than outside of London.

Effect of Social Grade

Due to the low number of balconies surveyed within Grade C2, the significance of the results for C2 have not been calculated as they would not be representative.

To determine the statistical significance of the results for Social Grade AB, the two-sample test was conducted as Social Grade AB against the remaining the balconies from the survey. This method was repeated with Social Grade C1 and DE.

Table VIII-3 t-test results for the different Social Grades

	AB	C1	DE
Mean	77.9	66.3	65.3
Variance	24286.0	9159.5	13015.4
Observations	173	462	373
Hypothesized Mean Difference	0	0	0.0
df	204	1008	779
t Stat	1.0220	-0.2996	-0.4442
P(T ≤ t) two-tail	0.1540	0.3823	0.3285
t Critical two-tail	1.6524	1.6464	1.6468

The P(T ≤ t) for all of the social grades is greater than the null hypothesis of H_o = 0.05, indicating that the results for each Social Grade does not differ enough to be deemed statistically significant.

Trigger heights

The statistical significance of the results of each trigger height was compared to the remaining heights in the sample, e.g., balconies on building heights less than 11 m were compared to all balconies on buildings greater than 11 m tall, and this was repeated for each trigger height group.

Table VIII-4 t-test results for different trigger heights

	< 11m	11 < h < 18	18 < h < 30	h > 30
Mean	62.5	70.1	89.7	48.9
Variance	8558.6	19522.7	17533.0	10176.6
Observations	491	265	161	103
Hypothesized Mean Difference	0.0	0.0	0.0	0.0
df	951.0	372.0	204.0	134.0
t Stat	-1.3257	0.3852	2.3840	-1.9339
P(T ≤ t) one-tail	0.1853	0.7003	0.0180	0.0552
t Critical one-tail	1.9625	1.9664	1.9717	1.9778

For building heights between 18 m and 30 m tall, the P(T ≤ t) = 0.0.018 < H_o = 0.05, therefore the results are statistically significant, and indicate that the fire load on balconies of buildings 18 to 30 m tall are significantly higher than the fire loads of other building heights. The fire load density for the other building heights is not statistically significantly different.

Balcony area

The statistical significance of the balconies less than 2.5 m^2 were compared to the balconies larger than 2.5 m^2 in area.

Table VIII-5 t-test results for different trigger heights

	< 2.5 m^2	> 2.5 m^2
Mean	81.9	55.5
Variance	21679.3	5711.4
Observations	460	560
Hypothesized Mean Difference	0	
df	654	
t Stat	3.4883	
P(T ≤ t) two-tail	0.0005	
t Critical two-tail	1.9636	

P(T ≤ t) = 0.0.005 < H_o = 0.05, therefore the results are statistically significant. This means there is statistical evidence that the fire load density for a balcony less than 2.5 m^2 is statistically higher than the fire load on a balcony with a greater area.

Time of year

Due to the impact of COVID on how people spent time at home, the statistical significance of the fire load contents dated in 2020 were compared to previous years.

Table VIII-6 t-test results for 2020 and 2019 and earlier

	<2019	2020
Mean	57.4	80.0
Variance	10270.7	16348.2
Observations	569	451
Hypothesized Mean Difference	0	
df	844	
t Stat	-3.0754	
P(T ≤ t) two-tail	0.0022	
t Critical two-tail	1.9628	

P(T ≤ t) = 0.0.022 < H_o = 0.05, therefore the results are statistically significant, indicating that since 2020, the fire load density on residential balconies has significantly increased.

Appendix IX – Additional tables

Table IX-1 Fire load densities, from J. Schleich and L.-G. Cajot, 'Valorisation Project - Natural Fire Safety Concept'

Occupancy	Fire Load Density (MJ/m^2)			
	Average (MJ/m^2)	Fractile (MJ/m^2)		
		80%	90%	95%
Dwelling	780	870	920	970
Hotel bedroom	310	400	460	510
Offices	420	570	670	760
Shops	600	900	1,100	1,300

Table IX-2 Fire growth rates as outlined in BS 9999:2017

Fire growth rate	Fire growth parameter, α (kJ/s^3)	Description	Examples
Slow	0.003	Evenly distributed low level fire load, small discrete packets of fuel or material of limited combustibility.	Reception areas, halls, concourses
Medium	0.012	Evenly distributed low to mid-level fire load comprising of a mix of combustible materials.	Offices, lounges, seating areas, galleries
Fast	0.047	Stacked combustibles, some small quantities of materials other than those of limited combustibility, storage of combustible materials.	Shop sales areas, workshops, small storage systems
Ultra-Fast	0.188	Medium to large quantities of materials other than those of limited combustibility, flammable liquids.	Warehousing, processing plants, carparks

APPENDIX C2:
Small-scale laminated glass experiments

Authors: M Spearpoint[1], I Rickard[1], G Remy[2], A Law[3] (Appendix III)

Reviewer: J Torero[4]

[1]OFR, [2]Efectis, [3]University of Edinburgh, [4]UCL

Contents

C2-1. Introduction 1
C2-1.1 Background 1
C2-1.2 Terminology 2
C2-2. Parameters investigated 3
C2-2.1 Inter-layer type 3
C2-2.2 Thermal exposure 3
C2-2.3 Glass thickness 3
C2-2.4 Panel size 4
C2-2.5 Shattering of glass pane 4
C2-3. Heat of combustion 6
C2-4. Experimental setup 7
C2-4.1 Heat source 7
C2-4.1.1 Radiant panel configuration 8
C2-4.1.2 Uniformity of heating 9
C2-4.1.3 Reference heat flux 11
C2-4.1.4 Vertical calibration 12
C2-4.2 Sample holder 13
C2-4.3 Instrumentation 15
C2-4.4 Methodology 15
C2-5. Experimental results 18
C2-5.1 Heat flux profiles 18
C2-5.2 Observations 20
C2-5.2.1 Melting of the inter-layer 20
C2-5.2.2 Droplets 20
C2-5.2.3 Flame spread 21
C2-5.3 Ignition 22
C2-5.4 Incident heat flux 27
C2-5.5 Panel thickness 28
C2-5.6 Panel size 31
C2-5.7 Heating location 34
C2-5.8 Exposed pane breakage 36
C2-5.9 Repeatability 40

C2-5.10 Inter-layer type 40
C2-5.11 Total mass loss 42
C2-6. Key findings and comparisons 46
C2-6.1 Summary 46
C2-6.2 Comparisons 47
C2-6.3 Recommendations 47
C2-7. References 49
C2-8. Acknowledgement 49
Appendix I 50
Appendix II 51
Appendix III 97
AIII-1 Introduction 99
AIII-2 Methodology 101
AIII-3 Results 106
AIII-4 Conclusions 112

Figures

Figure C2-1. Potential sources of imposed radiant heat on laminated glass used as a balcony balustrade 1
Figure C2-2 Shattering of the front pane of glass using a manual glass punch applied to the centre of the panel 5
Figure C2-3 Experimental arrangement showing laminated glass panel/s positioned on the load cell (scale) and the location of the radiant panels in the bottom heating location 7
Figure C2-4 Assessment of heat flux uniformity at a nominal 75 kW/m^2 exposure using (a) a single radiant panel, (b) two panels side-by-side 9
Figure C2-5 Measuring locations for the heat flux characterisation over a 300 mm by 300 mm glass panel region 10
Figure C2-6 Assessment of heat flux uniformity at (a) 25 kW/m^2 and, (b) 50 kW/m^2 10
Figure C2-7 Reference fluxmeter measurement, (a) comparison with a fluxmeter placed at the centre location, (b) measurement variability 11
Figure C2-8 Measuring locations for the vertical heat flux characterisation 12
Figure C2-9 Measured centre-line heat flux at the three designated exposure conditions . 13
Figure C2-10 Small (left) and large (right) panel arrangements 14
Figure C2-11 Installation of insulation (yellow) and plates (red) within the frame 15
Figure C2-12 Mass of glass samples being weighed before (left) and after (right) the experiment 16

Figure C2-13 Non-combustible board between the radiant panel and samples prior to exposure 17
Figure C2-14 Exemplar smoothed reference fluxmeter measurements for (a) 75 kW/m^2 (T27-3-B); (b) 50 kW/m^2 (T7_SBP8M); (c) 25 kW/m^2 (T8_SBP8L) 19
Figure C2-15 Example of travelling inter-layer and droplets during experiment T28-2 (21.5 mm thick sample with PVB inter-layer at 75 kW/m^2 heat exposure at the bottom) . 21
Figure C2-16 Example of droplets during the experiment T23-3-B (17.5 mm thick sample with SGP inter-layer at 75 kW/m^2 heat exposure at the bottom) 21
Figure C2-17 Time to ignition for unbroken panes when exposed to 75 kW/m^2 at the bottom for different inter-layer types and panel thicknesses, (a) large, (b) small (with full range of uncertainty not shown) 25
Figure C2-18 Time to ignition for unbroken (U) and broken (B), small (S) and large (L) panels when exposed to 75 kW/m^2 at the bottom for different inter-layer types and panel thicknesses (with full range of uncertainty not shown) 26
Figure C2-19 Time to ignition for unbroken small (S) and large (L) panels when exposed to 75 kW/m^2 at the three heating locations 27
Figure C2-20 Experiments using the small 17.5 mm thick panels with the PVB inter-layer exposed to 50 kW/m^2 (T7_SBP8M-2) and 75 kW/m^2 (T1_SBP8H-4) showing a higher peak heat release rate when exposed to the higher incident flux 28
Figure C2-21 Heat release rate results for the large panels with the PVB inter-layer, heated at 75 kW/m^2 at the bottom for 17.5 mm (T2_LBP8H-4), 21.5 mm (T13_LBP10H-2) and 25.5 mm (T14_LBP12H-3) thick panels 29
Figure C2-22 Heat release rate results for the small panels with the PVB inter-layer, heated at 75 kW/m^2 at the bottom for 17.5 mm (T1_SBP8H-4), 21.5 mm (T11_SBP10H-3) and 25.5 mm (T12_SBP12H-2) thick panels 29
Figure C2-23 Heat release rate results for the large panels with the SGP inter-layer, heated at 75 kW/m^2 at the bottom for 17.5 mm (T24-2), 21.5 mm (T29-2) and 25.5 mm (T31-1) thick panels 30
Figure C2-24 Heat release rate results for the small panels with the SGP inter-layer, heated at 75 kW/m^2 at the bottom for 17.5 mm (T23-2), 21.5 mm (T28-2) and 25.5 mm (T30-1) thick panels 30
Figure C2-25 Comparison of the heat release rate from small (T1_SBP8H-4) and large (T2_LBP8H-4) 17.5 mm thick panels, with the PVB inter-layer and heated at 75 kW/m^2 at the bottom 31
Figure C2-26 Comparison of the heat release rate from small (T11_SBP10H-3) and large (T13_LBP10H-2) 21.5 mm thick panels, with the PVB inter-layer and heated at 75 kW/m^2 at the bottom 32
Figure C2-27 Comparison of the heat release rate from small (T12_SBP12H-2) and large (T14_LBP12H-3) 25.5 mm thick panels, with the PVB inter-layer and heated at 75 kW/m^2 at the bottom 32
Figure C2-28 Comparison of the heat release rate from small (T23-1 and T23-2) and large (T24-1 and T24-2) 17.5 mm thick panels, with the SGP inter-layer and heated at 75 kW/m^2 at the bottom 33

Figure C2-29 Comparison of the heat release rate from small (T25-1 and T25-2) and large (T29-1 and T29-2) 21.5 mm thick panels, with the SGP inter-layer and heated at 75 kW/m^2 at the bottom 33
Figure C2-30 Comparison of the heat release rate from small (T30-1 and T30-2) and large (T31-1 and T31-2) 25.5 mm thick panels, with the SGP inter-layer and heated at 75 kW/m^2 at the bottom 34
Figure C2-31 Comparison of the heat release rate from the large 17.5 mm thick panels with the PVB inter-layer when the 75 kW/m^2 heating exposure was at the bottom (T2_LBP8H-4), centre (T5_LCP8H-2) and top (T6_LTP8H-2)..... 35
Figure C2-32 Comparison of the heat release rate from the small 17.5 mm thick panels with the PVB inter-layer when the 75 kW/m^2 heating exposure was at the bottom (T1_SBP8H-4), centre (T3_SCP8H-2) and top (T4_STP8H-2)..... 35
Figure C2-33 Photograph of 17.5 mm thick panel with the PVB inter-layer when heated at 75 kW/m^2 in the centre (T3_SCP8H-2) at around 7 min showing the peak of flaming 36
Figure C2-34 Comparison of the heat release rate from the 17.5 mm thick large panels with a broken and unbroken heat exposed pane with the PVB inter-layer when heated at the bottom at 75 kW/m^2 37
Figure C2-35 Comparison of the heat release rate from the small panels with a broken and unbroken heat exposed pane with the SGP inter-layer when heated at the bottom at 75 kW/m^2, (a) 17.5 mm thick, (b) 21.5 mm thick, (c) 25.5 mm thick..... 38
Figure C2-36 Comparison of the heat release rate from the 25.5 mm thick large panels with a broken and unbroken heat exposed pane with the SGP inter-layer when heated at the bottom at 75 kW/m^2 39
Figure C2-37 Comparison of the heat release rate from the 21.5 mm thick small panels with a broken and unbroken heat exposed pane with the EVA inter-layer when heated at 75 kW/m^2 39
Figure C2-38 Comparison of three repeated experiments for 17.5 mm thick panel, PVB inter-layer with a broken pane, small samples heated at the bottom at 75 kW/m^2.. 40
Figure C2-39 Comparison of the heat release rate of the four inter-layer types: PVB (T11_SBP10H-3), EVA (T21-1), SGP (T28-2) and CIP (T25-1) when the unbroken 21.5 mm thick small panels were exposed to 75 kW/m^2 at the bottom 41
Figure C2-40 Comparison of the heat release rate for two inter-layer types: PVB (T1_SBP8H-4) and SGP (T23-2) when the unbroken 17.5 mm thick small panels were exposed to 75 kW/m^2 at the bottom 41
Figure C2-41 Total mass loss of the 17.5 mm thick panels with the PVB inter-layer, heated at 75 kW/m^2 at the bottom, (a) small panels, unbroken (T1_SBP8H-1 to T1_SBP8H-4) and broken (T1_SBP8H-B), (b) large panels, unbroken (T2_LBP8H-2 to T2_LBP8H-4) and broken (T2_LBP8H-B)..... 42
Figure C2-42 Total mass loss of the 17.5 mm thick panels with the PVB inter-layer, heated at 75 kW/m^2 at the (a) centre, (b) top..... 42

Figure C2-43 Total mass loss of the panels with the PVB inter-layer, heated at 75 kW/m^2 at the bottom, (a) small panels, 21.5 mm thick, (b) small panels, 25.5 mm thick, (c) large panels, 21.5 mm thick, [d] large panels, 25.5 mm thick 43
Figure C2-44 Total mass loss of the 17.5 mm thick panels with the PVB inter-layer, heated at the bottom at 25 kW/m^2 (light blue), 50 kW/m^2 (blue) and 75 kW/m^2 (dark blue), (a) large panels, (b) small panels..... 44
Figure C2-45 Total mass loss of the 17.5 mm thick panels with the PVB inter-layer, heated at 75 kW/m^2 at the bottom, centre and top heating location (a) large panels, (b) small panels..... 44
Figure C2-46 Balcony balustrade glass fixing methods 48

Tables

Table C2-1 Summary of panel arrangements..... 4
Table C2-2 Ratios of linear edge to panel area 4
Table C2-3 Determination of the average heat of combustion (calorific content) of the four inter-layer materials 6
Table C2-4 Ignition times for panels with the PVB inter-layer..... 23
Table C2-5 Ignition times for panels with the EVA inter-layer..... 24
Table C2-6 Ignition times for panels with the CIP inter-layer..... 24
Table C2-7 Ignition times for panels with the SGP inter-layer 24
Table C2-8 Summary of laminated glass experiments with reliable mass loss measurements 51

C2-1. Introduction

C2-1.1 Background

This report forms part of a broader project to examine the potential fire safety impacts of the use of balconies, spandrels and laminated glass in buildings. This project provides evidence to the Building Safety Regulator (BSR) within the Health and Safety Executive (HSE) on which to consider any potential future technical changes to Approved Document B (ADB) and Regulation 7 in support of the Building Regulations in England. This report describes the results of an experimental programme designed to contribute to an understanding on whether the use of laminated glass as a balcony balustrade could contribute to storey-to-storey fire spread over the external façade of a building. The methodology adopted was developed through previous work at The University of Edinburgh on individual samples undertaken by Rickard et al. [1] and then later experiments involving multiple and larger samples conducted on behalf of Scottish Building Standards (SBS), see Appendix III.

(a) (b)

Figure C2-1. Potential sources of imposed radiant heat on laminated glass used as a balcony balustrade

The experiments have been designed to test the performance of different laminated glass products in credible worst-case conditions that might result from flames projecting from a window opening (Figure C2-1a) or from a fire originating on a balcony (Figure C2-1b), or other similar events such as a fire on a neighbouring structure, etc. The sample

configurations are not intended to represent the in-situ arrangements as the combination of fixing types and glass products mean that it would not be possible to investigate all variables within the constraints of this project.

The experiments were designed with input from the project expert review panel (ERP) particularly those from the glass and glazing industry to ensure that the types of laminated glass being used in industry were understood. As a result of these discussions four inter-layer types were used with varying thicknesses of toughened glass. While this is unlikely to capture the full range of laminated glass being used in industry at present, it should capture the majority. It is expected that there will be product innovations in future years, and it may be appropriate to test future products using a similar methodology to allow comparison with the performance of products currently on the market.

Findings from this stage of the project are to be used in the preparation of a campaign of full-scale balcony fire spread experiments to be conducted by Efectis. These experiments will further investigate the impact of using laminated glass balustrades (similar to those illustrated in Figure C2-1) although with other factors such as the moveable fire load on a balcony and the use of a combustible balcony structure.

C2-1.2 Terminology

The terminology used in this study is expressed in the form of a panel of laminated glass which consists of the panes of toughened glass with an inter-layer that laminates the panes of glass together. Each pane of glass and the inter-layer have specified thicknesses, which in sum make up the panel thickness. The size of a panel of laminated glass is used to indicate the dimensions that form its area. A similar terminology was used in the work of Rickard et al. [1] and also in the study carried out on behalf of SBS (Appendix III).

C2-2. Parameters investigated

C2-2.1 Inter-layer type

The previous work by Rickard et al. [1] and on behalf of SBS only investigated the performance of polyvinyl butyral (PVB) as an inter-layer. As previously noted in **Objective A/B**, PVB made up around 95% of the balustrade market. However, **Objective A/B** and discussions with the glass and glazing industry identified there are other inter-layer material available, namely SentryGlas Plus (SGP), ethylene-vinyl acetate (EVA), and cast in place (CIP) resin. It is not the objective of this work to go into details of the different inter-layer materials as these were discussed in **Objective A/B**. However, as a result of this information and also from one of the recommendations from the SBS study (Item 4.5 in Appendix III) these three inter-layer materials are included in this study. Due to resource limitations, the majority of the work presented herein has focussed on PVB and SGP, with EVA and CIP not being as extensively investigated. As discussed within this report, the impact of this was not substantial as it is found that PVB generally shows inferior fire performance of the four materials.

C2-2.2 Thermal exposure

The standard tests currently available for façade systems use different heat sources to achieve a heat flux impinging on the test specimen; typically, this would be a wood crib, a gas burner or a liquid pool fire. The heat sources are thought to be intended to represent typical fire scenarios of a fire plume projecting from an opening in a building. The maximum heat fluxes in the standard test methods have been estimated to vary from 40 kW/m^2 up to 100 kW/m^2 [2]. In the experiments carried out herein the glass samples were exposed to heat fluxes of 25, 50 and 75 kW/m^2. This is in line with the heat fluxes used in the experiments to date by OFR and on behalf of SBS and will allow comparison of results.

C2-2.3 Glass thickness

Laminated glass balustrades consist of two layers of no less than 8 mm thick toughened glass with an inter-layer typically 1.52 mm thick, although this may be slightly thinner in the case of cast-in-place systems. From discussions with industry, the most common configuration for balustrades consists of two layers of 10 mm thick toughened glass with a 1.52 mm inter-layer. The selection of glass thickness for a balustrade would typically depend on loading requirements in which 12 mm thick toughened glass panes may be used with a 1.52 mm inter-layer where increased loading must be considered. The experiments carried out assess these combinations of credible toughened laminated glass thicknesses with the aim of determining a worst-case credible thickness, if one exists. Most laminated glass used in balustrade applications features a 1.52 mm inter-layer, independent of the glass thickness. As a result, samples with a 1.52 mm thick inter-layer have been used, or

equivalent for cast-in-place, for the work herein. Table C2-1 summarises the panel thicknesses used in this work.

Table C2-1 Summary of panel arrangements

Inter-layer	Arrangement	Nominal panel thickness (mm)
PVB	2 × 8 mm pane + 1.52 mm inter-layer	17.5
	2 × 10 mm pane + 1.52 mm inter-layer	21.5
	2 × 12 mm pane + 1.52 mm inter-layer	25.5
EVA	2 × 10 mm pane + 1.52 mm inter-layer	21.5
SGP	2 × 8 mm pane + 1.52 mm inter-layer	17.5
	2 × 10 mm pane + 1.52 mm inter-layer	21.5
	2 × 12 mm pane + 1.52 mm inter-layer	25.5
CIP	2 × 10 mm pane + 1.52 mm inter-layer	21.5

C2-2.4 Panel size

The glass panels used are small when compared to what might be used as a balcony balustrade, this choice was made to facilitate repeatable experiments without the need for lifting equipment or consuming large quantities of materials. The size allowed the available radiant panel array to provide reasonably uniform heating across the selected heating area/sample (Section C2-4.1.2). Significantly larger panels could not have been heated over their full surface with the apparatus available.

Since the panels used in the experiments are smaller than would typically be used on a balustrade it is considered that they are likely to represent a worst case in terms of edge effects as there is a more edge for the panel mass / size than would be the case with a large panel. The two panel sizes used were 300 mm × 300 mm and 300 mm × 900 mm. Table C2-2 shows the relative edge to area ratio for the two panel sizes used, and for a panel representative of a balustrade.

Table C2-2 Ratios of linear edge to panel area

Panel size (mm)	Area (m^2)	Ratio of linear edge to panel area
300 × 300	0.09	13.3×10^{-3}
300 × 900	0.27	8.89×10^{-3}
1000 × 1500[a]	1.50	3.33×10^{-3}

[a] Indicative typical balustrade panel for comparison

C2-2.5 Shattering of glass pane

The ratio of linear edge with panel size, along with thermal shielding and other factors, influence the potential for the panes of glass to shatter when exposed to heating. From the initial experiments carried out by Rickard et al. [1] and comparison with later experiments

reported herein it has been found that the fixing system or framing of a laminated glass appear to influence the propensity for a pane to shatter. It was neither viable within the scope of this project nor necessarily relevant to understand the critical parameters for a pane of the laminated glass to shatter. However, from observations of previous experiments where the glass did shatter it was evident that this may introduce a different behaviour under heating.

As the experiments proceeded in this work it was found that the pane often shattered, but this was during the cooling phase rather than during the heating phase as observed by Rickard et al. [1]. The reason is posited that the panels in this study had a sample holder frame that minimised introduction of both differential thermal stresses within the glass or mechanical stress from the sample holder frame itself. Since shattering of a pane during heating may have an impact on the ignition and burning characteristics of the inter-layer, some experiments were conducted in which the panel was pre-shattered by using a manual glass punch on the centre of the front pane of glass (Figure C2-2). The shattered glass remained held in place by the inter-layer, and the rear pane of glass remained unshattered. Panels that had the heat-exposed pane of glass was shattered prior to heating are referred to a ‘broken’ panels, otherwise the panels are referred to as being ‘unbroken’.

Figure C2-2 Shattering of the front pane of glass using a manual glass punch applied to the centre of the panel

C2-3. Heat of combustion

Prior to the radiant panel experiments discussed in the following sections, the heat of combustion of the inter-layer material was determined using a bomb calorimeter. Tests were conducted to BS EN ISO 1716:2018. Prior to each day of testing the equipment was verified using Benzoic acid to within 0.82% or better. Three replicates were carried out for each material type and thickness. Results are given in Table C2-3 in which the SGP and EVA gave the highest and similar values whereas PVB and CIP resin gave lower and similar values.

Table C2-3 Determination of the average heat of combustion (calorific content) of the four inter-layer materials

Material	Mass [kg]	Calorific content [MJ/kg]	Average [MJ/kg]
PVB	0.00049749	31.362	31.35 ± 0.01
	0.00051611	31.336	
	0.00052272	31.349	
SGP (0.89 mm)	0.00050392	40.495	40.43 ± 0.08
	0.00049192	40.316	
	0.00049155	40.475	
SGP (1.52 mm)	0.00050778	40.989	40.99 ± 0.10
	0.00049484	41.116	
	0.00049639	40.859	
EVA	0.00046340	39.204	39.23 ± 0.02
	0.00049103	39.244	
	0.00050316	39.248	
Cast in place resin (1.5 mm)	0.00049976	29.124	29.12 ± 0.02
	0.00050422	29.139	
	0.00049720	29.090	
Cast in place resin (2.0 mm)	0.00049628	29.566	29.51 ± 0.04
	0.00050003	29.493	
	0.00051034	29.472	

C2-4. Experimental setup

The experiments were carried out by Efectis at their testing facility in Newtonabbey, Northern Ireland. The apparatus was based on that used previously in the experiments carried out by Rickard et al. [1], and those subsequently conducted on behalf of SBS at the University of Edinburgh. Figure C2-3 shows a sketch of the experimental setup which consists of a sample holder supporting the laminated glass panel/s in a vertical orientation and a propane fuelled radiant panel arrangement. The radiant panel arrangement provided a repeatable and well characterised thermal exposure to the laminated glass panels representative of that which might be experienced by a balcony balustrade in a real fire scenario. The following sections of this report describe the different aspects of the apparatus and parameters which have been investigated in the experiments.

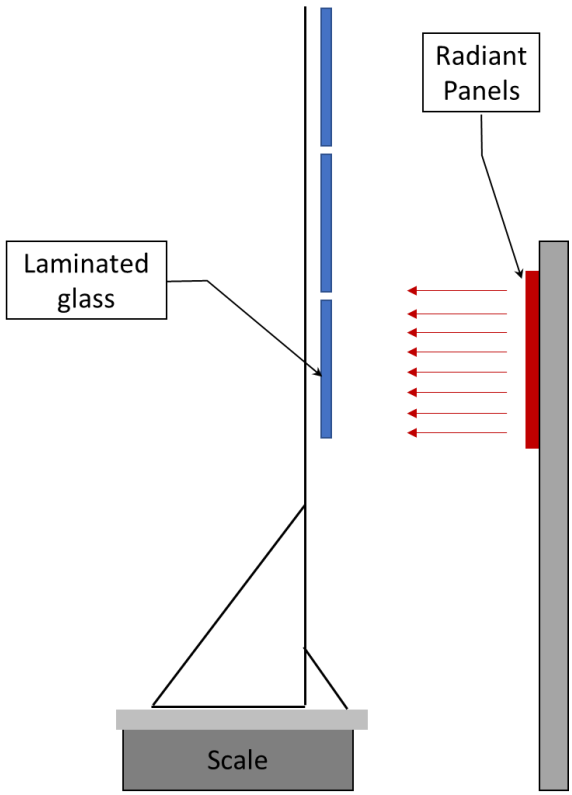

Figure C2-3 Experimental arrangement showing laminated glass panel/s positioned on the load cell (scale) and the location of the radiant panels in the bottom heating location

C2-4.1 Heat source

Propane fuelled radiant panels were selected as the heat source to allow repeatable thermal exposure of the vertically orientated laminated glass panels. This approach was in keeping with that taken in experiments at the University of Edinburgh on behalf of the SBS. The use of radiant panels also allows improved visibility of the panels during experiments when compared to furnaces or heating from a pool fire or similar.

The apparatus was built around two 500 mm by 500 mm radiant panels supplied by Infraglo, operated on a mixture of propane and air through two pre-mixing systems and associated 25 mm diameter hoses etc. Gas was supplied from two 45 kg bottles of propane flowing at 1000 mg/s. The radiant panel array was designed to be height adjustable so that the location of heating could be varied to allow for heating of the top, centre, and bottom panels / parts of a panel in different experiments.

The radiant panels operated at full power for the duration of an experiment and the incident heat flux to a panel was controlled by changing the offset between the radiant panels and laminated glass surface. This was done manually using a threaded bar linear drive system. Active movement of the radiant panels during experiments is not required for constant incident heat fluxes. The required offset for the target incident heat flux was established through a calibration process, as discussed in in the remainder of this section.

C2-4.1.1 Radiant panel configuration

Two radiant panels were purchased for these experiments and there was the option to use a single panel or an array of two panels side-by-side to produce a single radiant array 1000 m wide and 500 mm high. Measurements to assess the uniformity of heat flux were taken at an offset delivering a nominal heat flux of 75 kW/m^2 in the centre of the laminated glass panel position. The incident heat flux was then measured in plane at key points corresponding to the glass panel surface.

Measurements from the heat flux gauge are shown in Figure C2-4. For the single radiant panel the centre heat flux was measured as 74.5 +/- 0.6 kW/m^2 compared with 75.4 +/- 0.6 kW/m^2 for the two-panel configuration. The inner ring showed average reductions of 6.6 W/m^2 and 4.7 kW/m^2 from the centre measurements for the single and two-panel configurations respectively. The outer ring showed average reductions of 16.1 kW/m^2 and 11.5 kW/m^2 from the centre measurements for the single and two-panel configurations respectively. As would be expected, results show that the two-panel configuration gave a more uniform flux over the laminated glass panel region and was therefore used for all the subsequent experiments described herein.

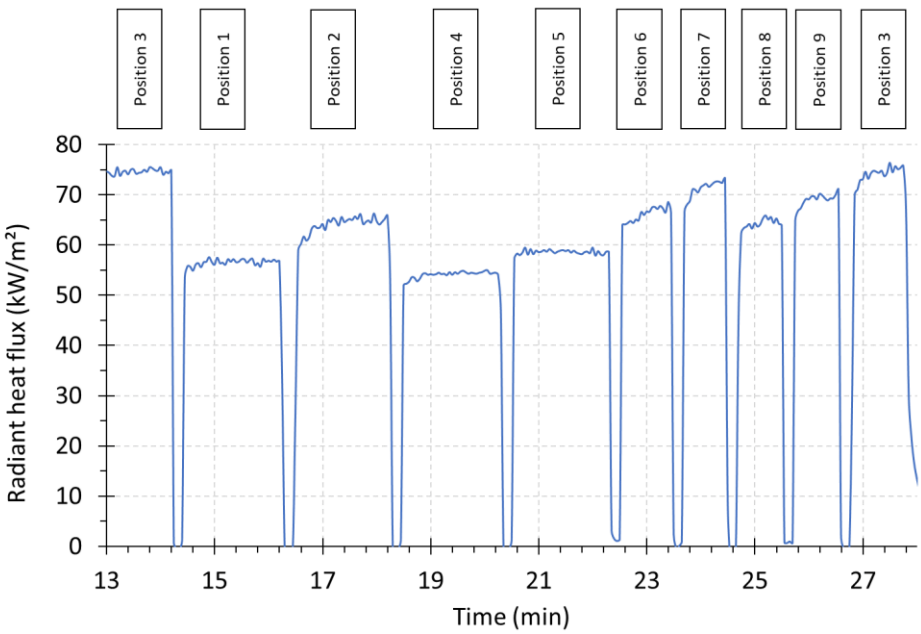

(a)

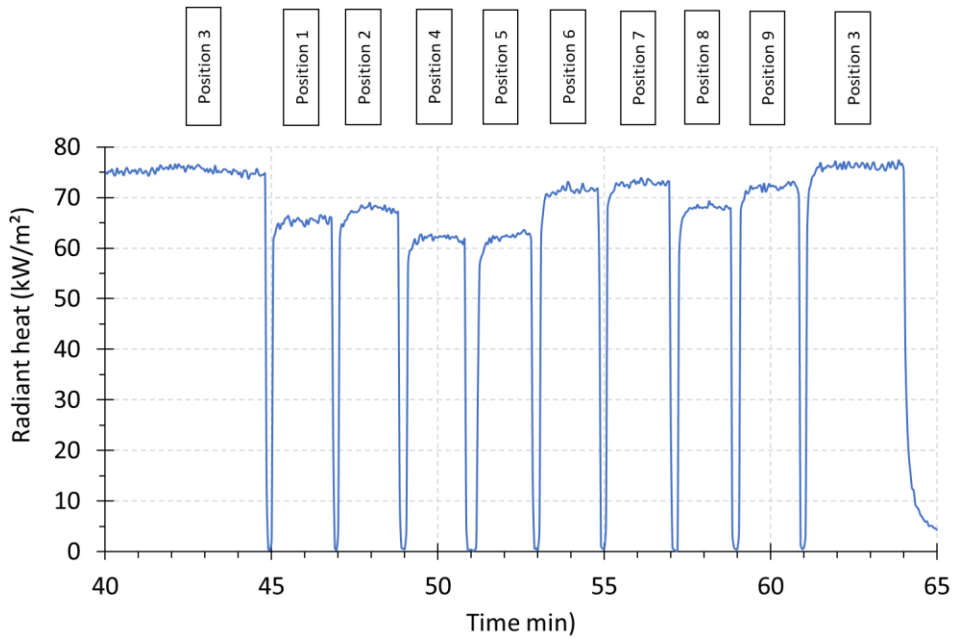

(b)

Figure C2-4 Assessment of heat flux uniformity at a nominal 75 kW/m^2 exposure using (a) a single radiant panel, (b) two panels side-by-side

C2-4.1.2 Uniformity of heating

At a nominal 75 kW/m^2 heat flux, the variation in the average measured heat flux at Positions 6 to 9 (Figure C2-5) was from 64.1 kW/m^2 to 71.1 kW/m^2 compared with 75.8 kW/m^2 in the centre location (Figure C2-4b).

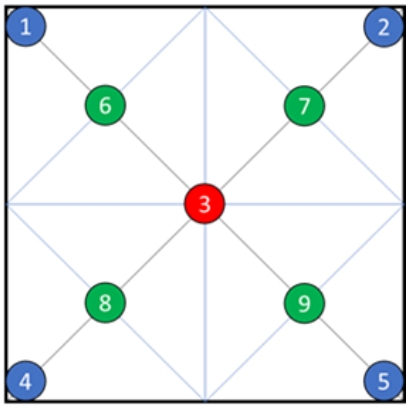

Figure C2-5 Measuring locations for the heat flux characterisation over a 300 mm by 300 mm glass panel region

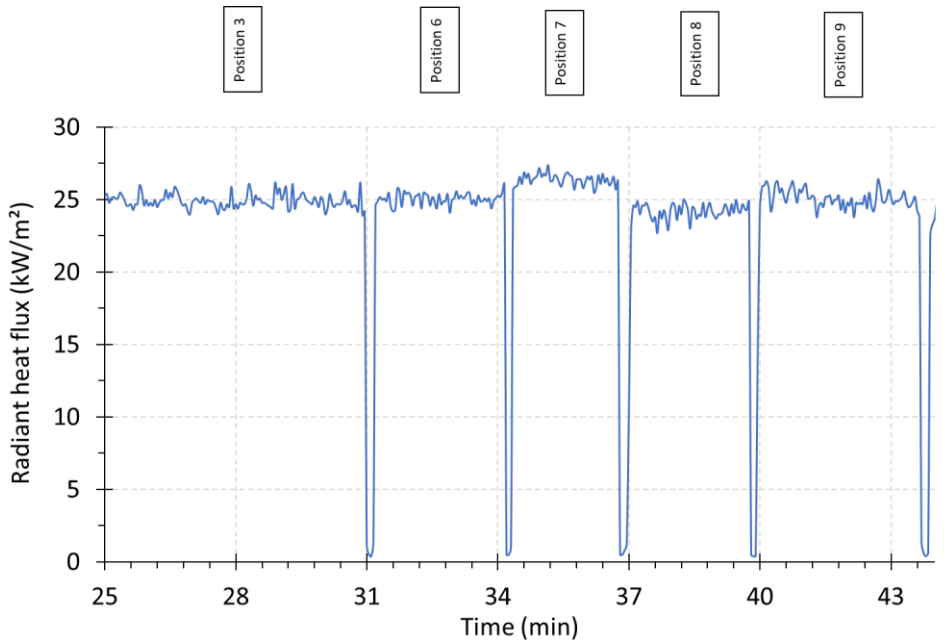

(a)

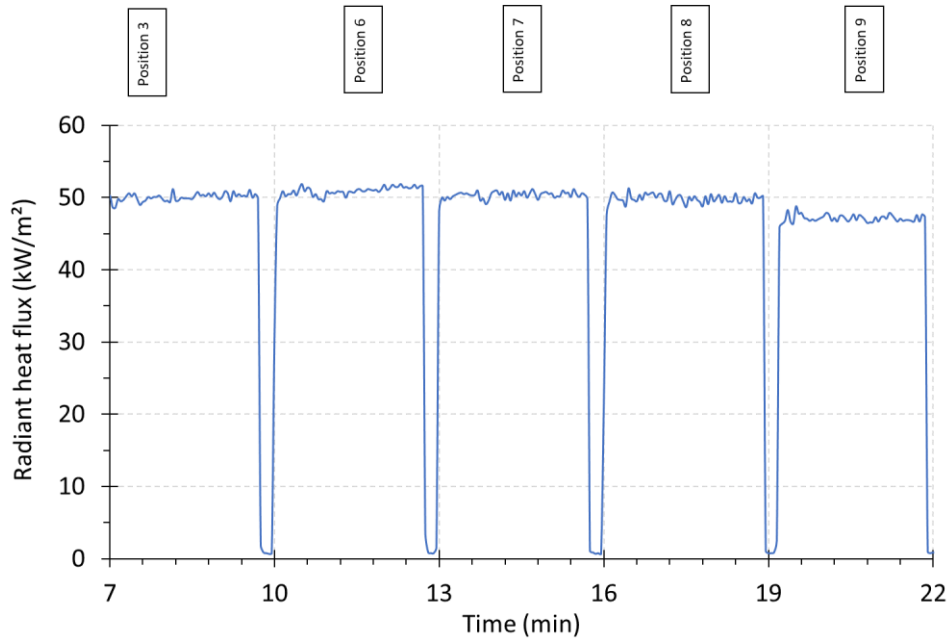

(b)

Figure C2-6 Assessment of heat flux uniformity at (a) 25 kW/m^2 and, (b) 50 kW/m^2

During the calibration at 25 kW/m^2 and 50 kW/m^2 nominal heat fluxes positions 1, 2, 4 and 5 where not assessed. For the nominal 50 kW/m^2 heat flux, the variation in the average measured heat flux was 47.1 to 51.5 kW/m^2 compared with 50.8 kW/m^2 in the centre location (Figure C2-6a). Finally, for the nominal 25 kW/m^2 heat flux, the variation in the average measured heat flux was 23.5 to 26.4 kW/m^2 compared with 25.0 kW/m^2 in the centre location (Figure C2-6b).

C2-4.1.3 Reference heat flux

As part of the calibration procedure a heat flux gauge was offset 280 mm from the centre of the samples during experiments. This allowed for a measurement of heat flux at this location that could then be used to verify the exposure to the glass panels during the experiments without any interference. Figure C2-7 shows the measured heat flux at the centre and the corresponding heat flux at the offset reference location for 75 kW/m^2.

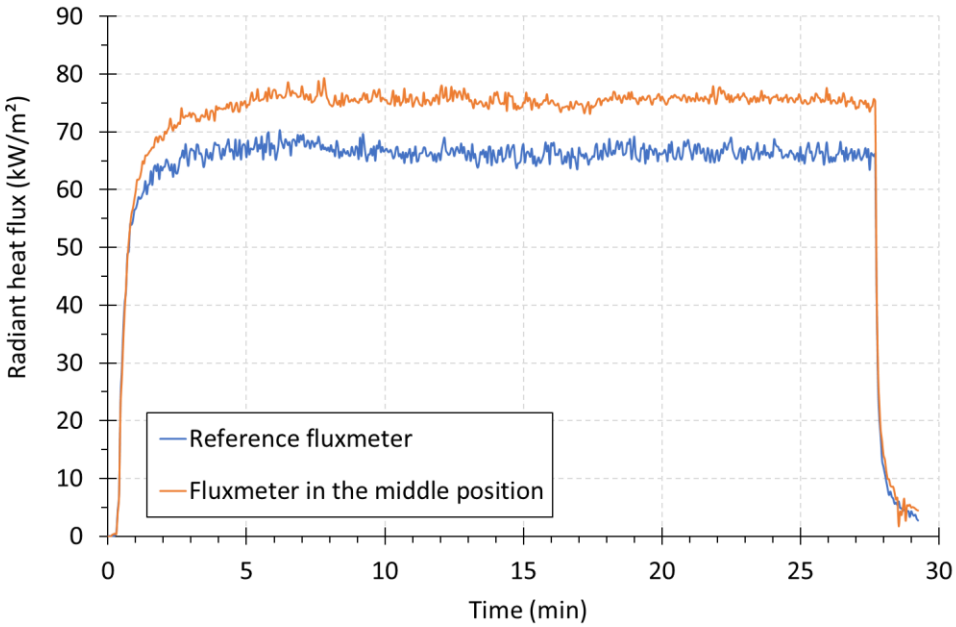

(a)

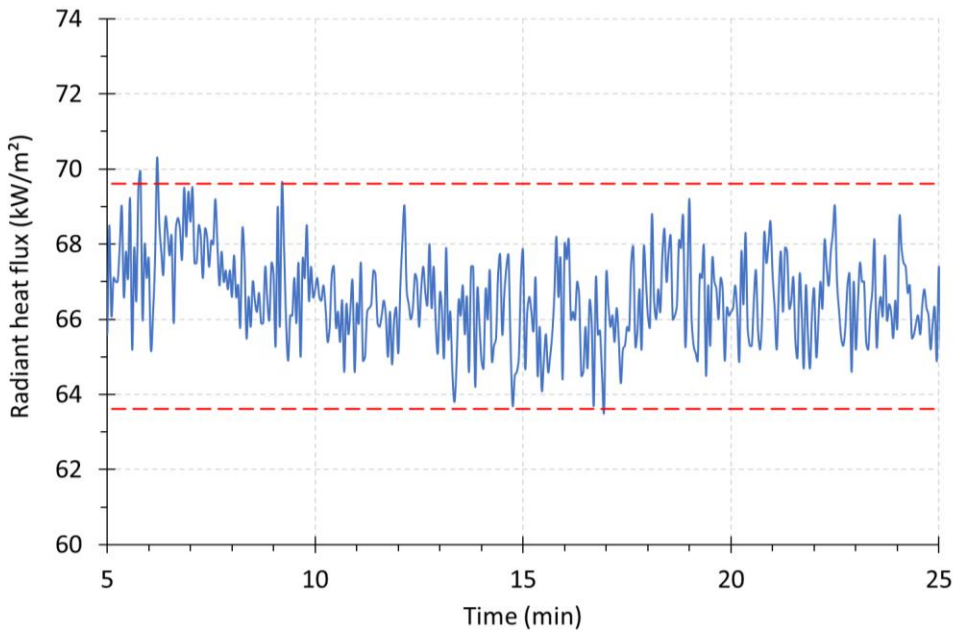

(b)

Figure C2-7 Reference fluxmeter measurement, (a) comparison with a fluxmeter placed at the centre location, (b) measurement variability

C2-4.1.4 Vertical calibration

The heat flux along the centreline of the laminated glass panel positions was characterised at the three exposure heat fluxes, namely 25 kW/m^2, 50 kW/m^2 and 75 kW/m^2. Measurements were made at the centre and interface between panels when the three small samples were to be assessed, as shown in Figure C2-8.

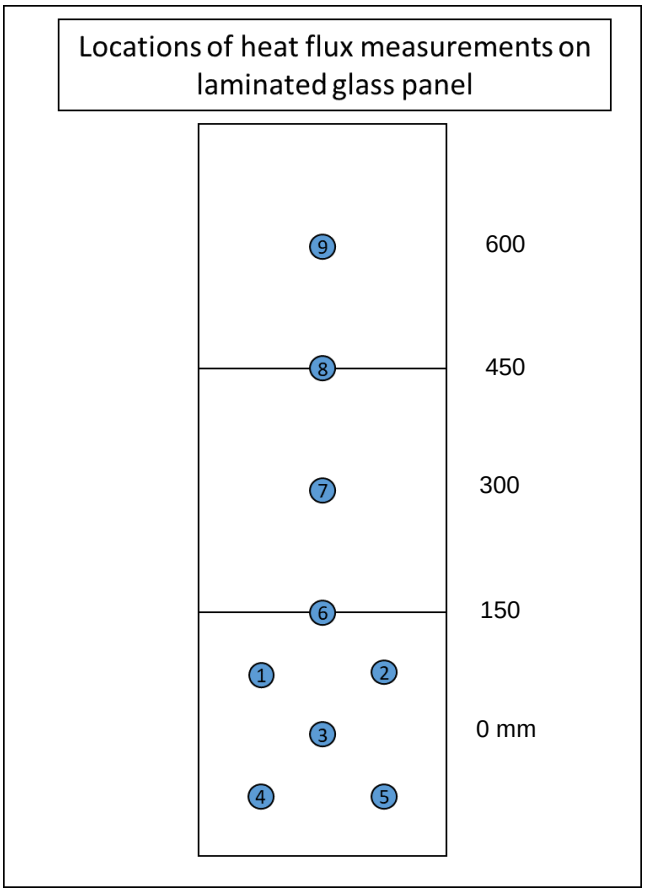

Figure C2-8 Measuring locations for the vertical heat flux characterisation

Figure C2-9 shows the measured heat flux at the five measuring locations (Positions 3 and 6 to 9) for the three designated exposure conditions. The increasing reduction in heat flux vertically with increasing target heat flux was as expected and was a result of the method by which the incident heat flux is controlled. Since the radiant panels burn at a constant power and the offset was changed, this altered the view factor and resultant incident heat flux remote from the centre of the radiant panels.

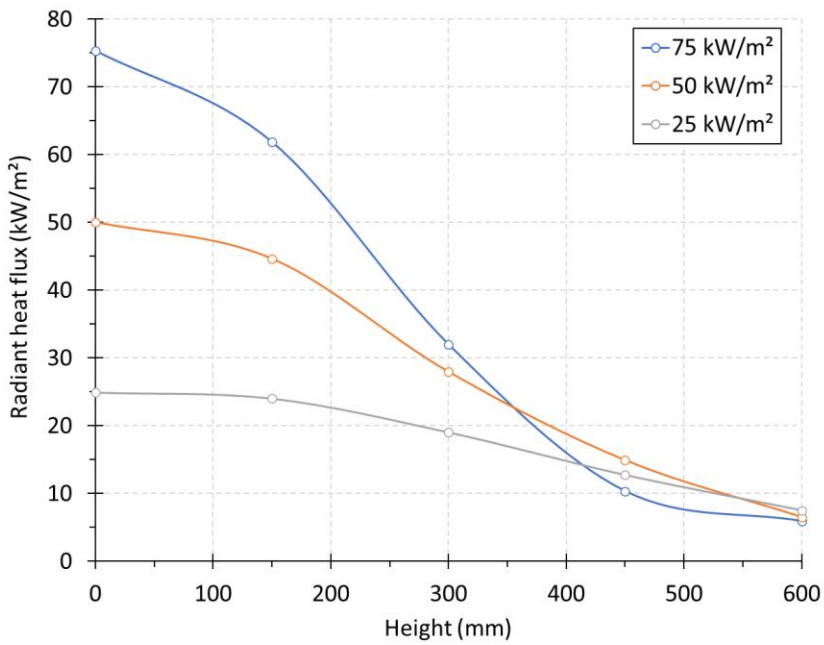

Figure C2-9 Measured centre-line heat flux at the three designated exposure conditions

C2-4.2 Sample holder

The sample holder was designed to support the two selected laminated glass panel configurations. It consisted of a simple steel frame without edge shielding other than to secure the panel/s (Figure C2-10).

Laminated glass panels were installed within the frame by friction fit with a thin layer of 2 mm thick calcium silicate insulation between the frame and the sample. The bottom section of the panel was supported by the frame. In addition, six plates were installed at the edge of the panel/s. For a pair of plates held each of the three small panels, and all six plates held the large panel (Figure C2-11). The plates were cut and installed so that they minimised overlap at the edges of the panels. No insulation was installed between the insulation plate and the sample. Note that, the sample holder design was changed after an initial round of experiments due to issues obtaining mass loss data.

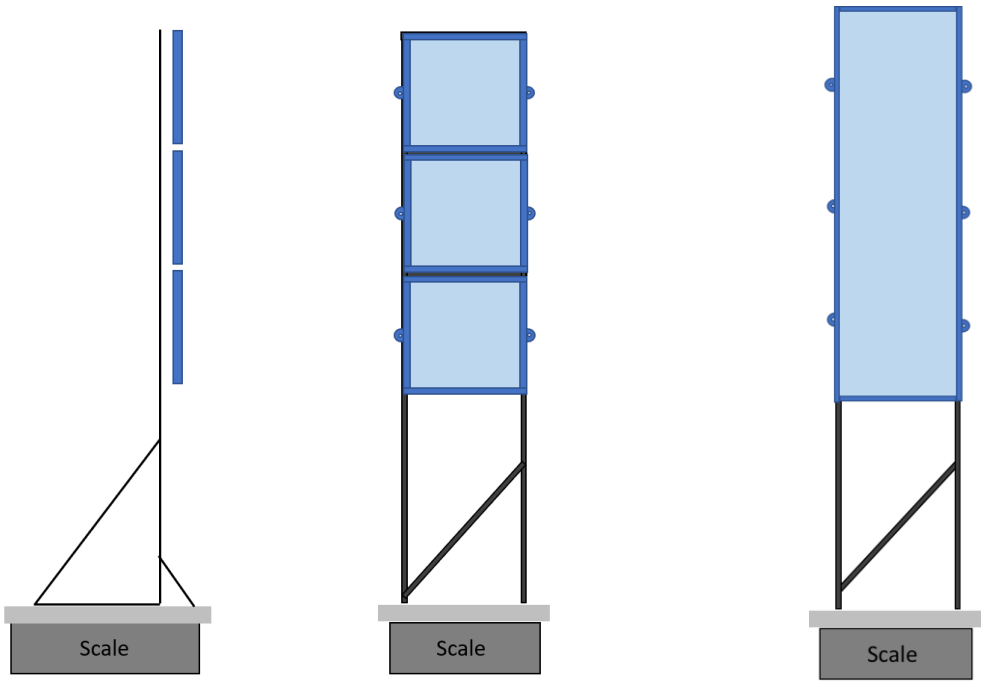

Figure C2-10 Small (left) and large (right) panel arrangements

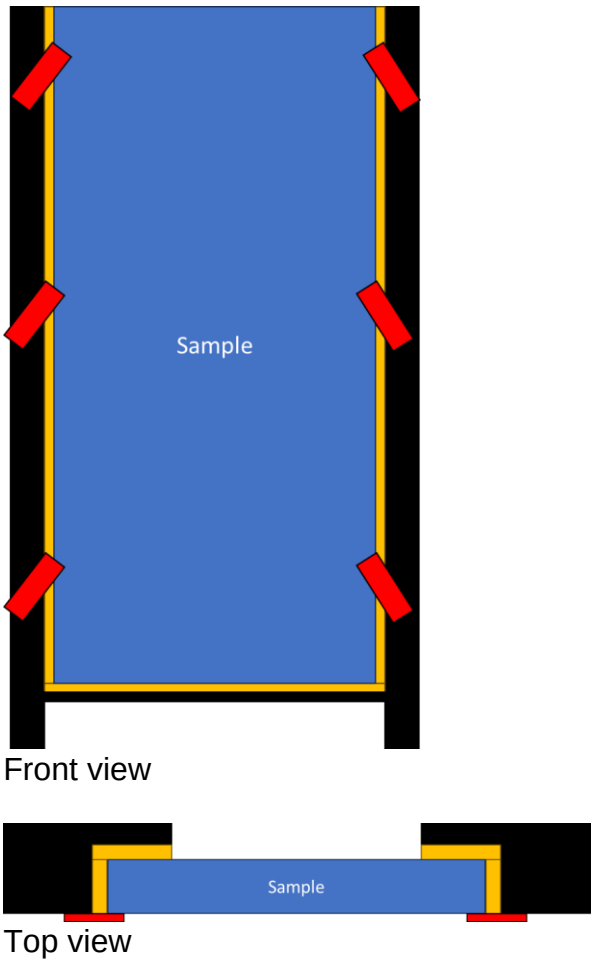

Figure C2-11 Installation of insulation (yellow) and plates (red) within the frame

The sample holder frame and samples were positioned on a KERN DS 150K1 scale with an accuracy of 1 g to allow the mass loss to be recorded during the experiments.

C2-4.3 Instrumentation

Mass loss during the experiments was measured using the scale under the sample holder. This allowed estimation of the heat release rate. It was not possible to measure the heat release rate using oxygen calorimetry due to the hood at the Efectis laboratory not being sufficiently sensitive for the low heat release rates expected.

No thermocouples were placed on or within the samples as these were seen to have an influence on the behaviour of the inter-layer in earlier experiments conducted by Rickard et al. [1]. Video cameras were positioned to the side and rear of the samples during experiments to allow observation of the behaviour of the samples under heating including flame height.

C2-4.4 Methodology

The panels of laminated glass were stored in a conditioning room for at least 2 weeks at 23±2 °C and 50±5% RH before testing. The total mass of the panels was recorded prior to being mounted in the frame (Figure C2-12) and at the end of an experiment.

Figure C2-12 Mass of glass samples being weighed before (left) and after (right) the experiment

After weighing, the samples were mounted in the frame away from the heating source. Once the panels were mounted on the frame, the measurement of the mass using the load cell was initiated. However, as already noted in Section C2-4.2, in some of the early experiments there was a problem with the load cell and the mass loss measurements are considered to be unreliable. The measurement of the mass of the laminated glass panels before and after provides some means to compare the results from the unreliable experiments.

The radiant panel was then heated for at least 10 min until the desired stable heat flux was achieved by confirming the output from the reference heat flux meter. A sheet of non-combustible board was placed between the radiant panel and the samples (Figure C2-13) and the radiant panel was placed in position for another 10 min before the experiment was started. The non-combustible board was then removed, and any relevant observations made. Exposure lasted 40 min at which point the radiant panels were switched off and the radiant heaters moved away from the sample.

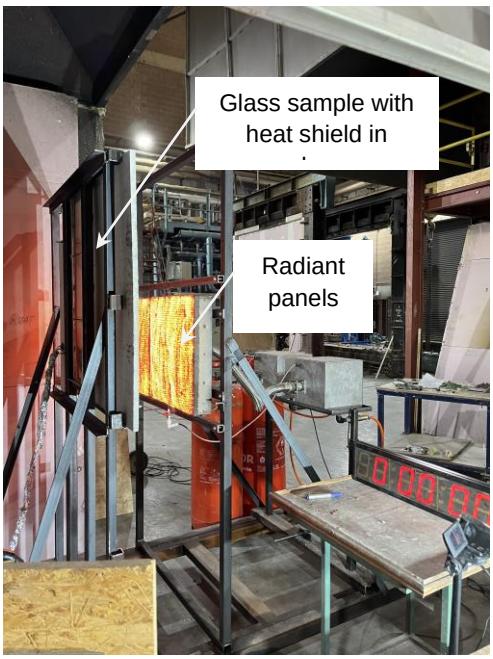

Figure C2-13 Non-combustible board between the radiant panel and samples prior to exposure

C2-5. Experimental results

The following sub-sections present the multiple means to compare combinations of experimental parameters: incident flux, heating location, sample size, laminate thickness, and laminate type. Results are given in the form of time to ignition of inter-layer material (Section C2-5.3), heat release rate (Section C2-5.4 to Section C2-5.10) and total mass loss (Section C2-5.11). Where the heat exposed panes were broken prior to starting, the experiment is labelled with a 'B' suffix (e.g., see T27-3-B in Figure C2-14a).

As it was not practical to directly obtain heat release rate via oxygen consumption calorimetry under the hood given the expected smaller fire sizes in comparison to the measurement capabilities of the hood, mass loss and mass loss rate are used as a proxy for heat release rate. However, the loss of mass may have been as a result of the burning of laminate, the melting of laminate that falls off the sample and/or the loss of glass. Therefore, predicted total energy and heat release rate are likely to be maximum values.

C2-5.1 Heat flux profiles

Exemplar reference heat flux curves are shown in Figure C2-14 at the 25 kW/m^2, 50 kW/m^2 and 75 kW/m^2 exposures. Here the curves are shown with post-measurement exponential weighted smoothing applied using the Python Pandas library with a centre of mass decay set to 10. As discussed in Section C2-4.1.3, the reference gauge records heat fluxes less than the target heat flux as it is offset from the centreline of the panel, but the previous calibration work verifies that the heat flux at the sample centre is giving the desired level of thermal exposure.

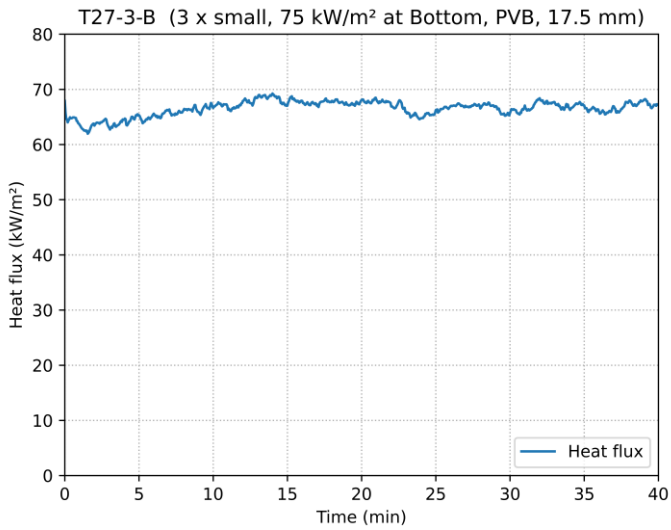

(a)

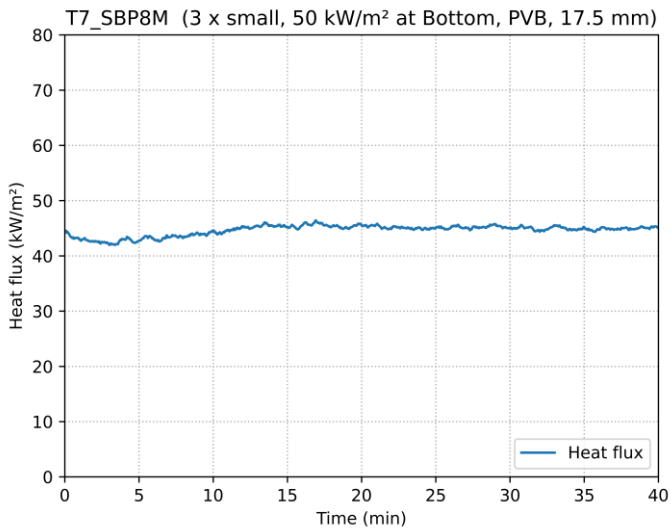

(b)

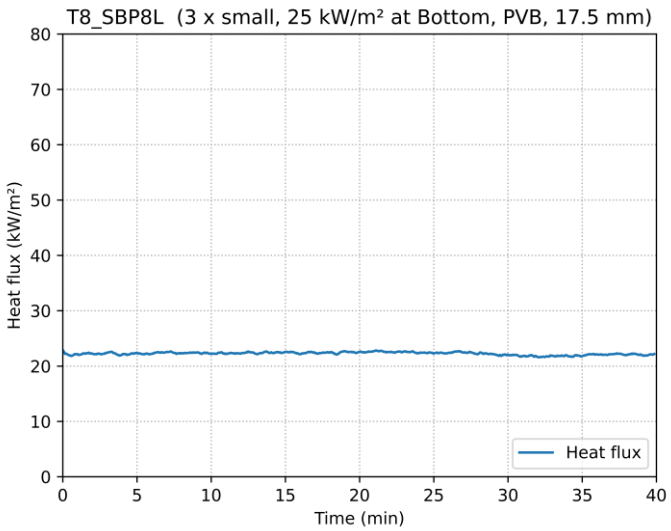

(c)

Figure C2-14 Exemplar smoothed reference fluxmeter measurements for (a) 75 kW/m^2 (T27-3-B); (b) 50 kW/m^2 (T7_SBP8M); (c) 25 kW/m^2 (T8_SBP8L)

C2-5.2 Observations

Visual observations were carried out during all experiments to understand the behaviour and the reactions of the different combinations of inter-layer types, glass thickness etc. listed in Section C2-2. Due to the large number of experiments performed, this section provides a summary of the observations. For each experiment, the following points were recorded:

- Start time of inter-layer melting,
- Occurrence of droplets, and whether the droplets were flaming or non-flaming droplets,
- Occurrence of flame spread on the edge of the samples or in the middle, and
- Flame spread height at the middle of the sample, at top of the sample, etc.

C2-5.2.1 Melting of the inter-layer

The start time of the melting of the inter-layer was defined as the time of occurrence of some visual bubbles appearing in the glass. These times varied but were always in the same range for each inter-layer types. However, it was difficult to observe this start of melting for the pre-shattered glass.

For the samples with PVB, SGP and CIP inter-layers at the 75 kW/m^2 exposure, the start time of the melting occurred between 2 and 3 min after heat exposure. For the samples with the EVA inter-layer, the start time of the melting occurred between 4 and 5 min after heat exposure. No significant differences were noticed between the various configurations investigated. Both the small and large PVB samples panels exposed to 50 kW/m^2 also started melting between 2 and 3 min whereas the PVB sample exposed to 25 kW/m^2 had a slower start melting time of between 5 and 6 min.

C2-5.2.2 Droplets

The visual observation of flaming or non-flaming droplets was unpredictable due to the framing that supported the laminated glass samples. After the melting occurred, the inter-layer mostly travelled down the vertical supports that formed the frame rather than dripping. It has been difficult to visually quantify the extent of inter-layer that melted and resulted in droplets during experiments and therefore the findings herein are only qualitative.

For the PVB inter-layer experiments, some droplets were observed for all configurations. However, flaming droplets were mostly noticed with the 75 kW/m^2 heat exposure when the radiant panel was located at the bottom of the sample. Figure C2-15 is an example of flaming droplets and also the melting inter-layer travelling down the vertical supports.

The SGP inter-layer also exhibited melting material travelling down the supports and flaming droplets. For example, in experiment T23-3-B (Figure C2-16) dripping was seen at the centre of the lower edge starting at around 10 min into the experiment for around 9 min thereafter, with drips falling at around once per second or faster (but not as a continuous stream) throughout much of this time.

Upon evaluating the different inter-layers in various configurations, it has been observed that the SGP samples exhibited the highest presence of flaming droplets. Additionally, the PVB and EVA inter-layer samples also displayed some instances of flaming droplets on the vertical supports, although in smaller quantities compared to the SGP samples. In contrast, minimal to no flaming droplets were observed during the CIP inter-layer experiments.

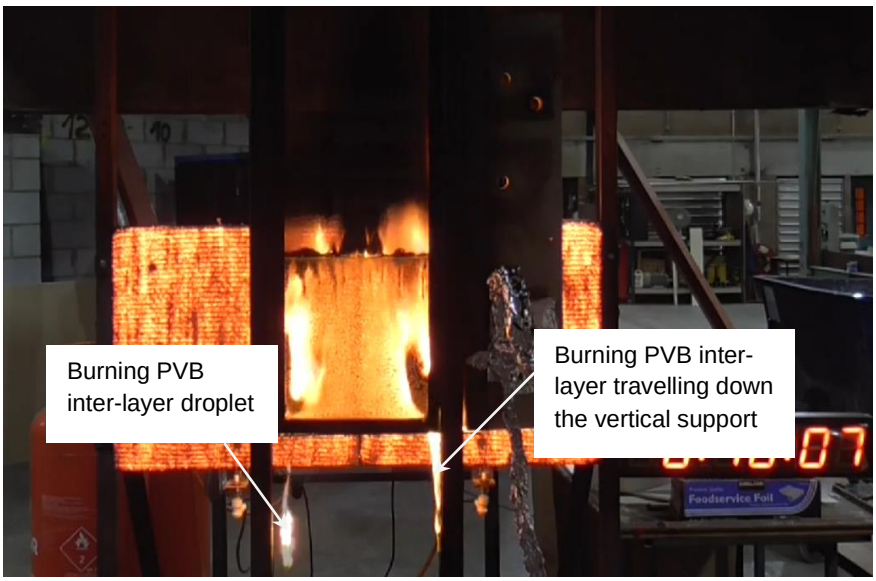

Figure C2-15 Example of travelling inter-layer and droplets during experiment T28-2 (21.5 mm thick sample with PVB inter-layer at 75 kW/m^2 heat exposure at the bottom)

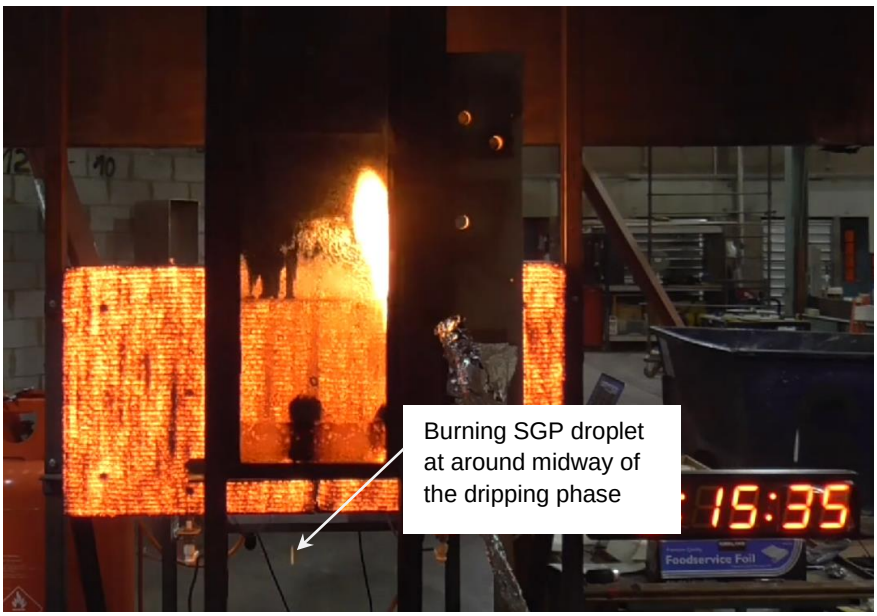

Figure C2-16 Example of droplets during the experiment T23-3-B (17.5 mm thick sample with SGP inter-layer at 75 kW/m^2 heat exposure at the bottom)

C2-5.2.3 Flame spread

Both the upward and downward flame spread occurred on the edge of the panels. In the case of downward flame spread, flaming droplets were observed but also flaming of melted inter-layer running along the steel frame. In some of the broken glass and small panel experiments flaming was also seen in the horizontal joints between two panes. This would suggest some element of horizontal flame spread between panels although this is not

definitive since the panels were only 300 mm wide. Flaming was still visible at the end of some experiments, but this ceased within few minutes as soon as the radiant source was removed. No external extinguishment was carried out in any of the experiments.

In terms of comparing inter-layers, the main focus is on the setup where the radiant panel is located at the bottom section and the glass is exposed to a heat flux of 75 kW/m^2. Here the flame spread is defined as the point at which the flame reaches the top of the experimental setup. However, it should be noted that in some cases, this flame spread height can be considered as flame flashing rather than actual flame spread. When considering the PVB inter-layer, it was observed that in almost every experiment, the flame spread occurred above the top of the setup. The thickness of the glass pane did not have a significant impact on the flame spread height. On the other hand, for the SGP inter-layer, both the glass pane thickness and size seemed to influence flame spread. In most cases, flames spread above the top of the setup for large pane sizes with thicknesses of 17.5 mm and 21.5 mm. However, for other evaluated configurations, the flame spread was limited to the middle of the sample. In contrast, no flame spread was observed for the CIP and EVA inter-layers. The height of the flames reached only up to the middle of the sample. It is important to note that only a limited number of samples were evaluated for the CIP and EVA inter-layers.

Therefore, based on the observations, it can be concluded that the PVB inter-layer exhibits the highest occurrence of flame spread or flame flashing at a higher location compared to the other inter-layers.

C2-5.3 Ignition

The time to inter-layer ignition results are shown in Table C2-4 to Table C2-6 as a mean and standard deviation (in seconds and the equivalent time in minutes) where more than one experiment was carried for a given combination of inter-layer type, panel thickness, heating location, heat flux and initial condition of the exposed pane.

Most of the time the ignition point was located on the side edges of the glass pane at the junction between the glass pane and the sample holder and/or at the junction between two glass panes. Ignition was always at a point where melting occurred. With the pre-shattered glass experiments, ignition was also observed in the middle of the glass sample.

Table C2-4 Ignition times for panels with the PVB inter-layer

ID	Panel type	Panel thickness	Heating location	Heat flux	Time to ignition (s / min)
P1	3 x small (unbroken)	17.5	Bottom	75	337 ± 53 (5.6 ± 0.9)
P2	3 x small (broken)	17.5	Bottom	75	398 ± 82 (6.6 ± 1.4)
P3	Large (unbroken)	17.5	Bottom	75	336 ± 52 (5.6 ± 0.9)
P4	Large (broken)	17.5	Bottom	75	330 (5.5)
P5	3 x small (unbroken)	17.5	Centre	75	298 ± 11 (5.0 ± 0.2)
P6	3 x small (unbroken)	17.5	Top	75	336 ± 64 (5.6 ± 1.1)
P7	Large (unbroken)	17.5	Centre	75	311 ± 4 (5.2 ± 0.1)
P8	Large (unbroken)	17.5	Top	75	559 + 132 (9.3 ± 2.2)
P9	3 x small (unbroken)	17.5	Bottom	50	627 (10.5)[a]
P10	3 x small (unbroken)	17.5	Bottom	25	No ignition
P11	Large (unbroken)	17.5	Bottom	50	543 ± 119 (9.1 ± 2.0)
P12	Large (unbroken)	17.5	Bottom	25	No ignition
P13	3 x small (unbroken)	21.5	Bottom	75	424 ± 60 (7.1 ± 1.0)
P14	3 x small (unbroken)	22.5	Bottom	75	499 ± 97 (8.3 ± 1.6)
P15	Large (unbroken)	21.5	Bottom	75	428 ± 16 (7.1 ± 0.3)
P16	Large (unbroken)	22.5	Bottom	75	483 ± 39 (8.1 ± 0.6)

[a] Only one of two samples ignited

Table C2-5 Ignition times for panels with the EVA inter-layer

ID	Panel type	Panel thickness	Heating location	Heat flux	Time to ignition (s / min)
E1	3 x small (unbroken)	21.5	Bottom	75	610 ± 56 (10.2 ± 0.9)
E2	3 x small (broken)	21.5	Bottom	75	622 (10.4)
E3	Large (unbroken)	21.5	Bottom	75	734 (12.2)

Table C2-6 Ignition times for panels with the CIP inter-layer

ID	Panel type	Panel thickness	Heating location	Heat flux	Time to ignition (s / min)
C1	3 x small (unbroken)	21.5	Bottom	75	531 (8.9)[a]

[a] Only one of two samples ignited

Table C2-7 Ignition times for panels with the SGP inter-layer

ID	Panel type	Panel thickness	Heating location	Heat flux	Time to ignition (s / min)
S1	3 x small (unbroken)	17.5	Bottom	75	412 ± 45 (6.9 ± 0.8)
S2	3 x small (broken)	17.5	Centre	75	535 (8.9)
S3	Large (unbroken)	17.5	Bottom	75	616 ± 179 (10.3 ± 3.0)
S4	Large (broken)	17.5	Bottom	75	495 (8.3)
S5	3 x small (unbroken)	21.5	Bottom	75	1294 ± 1141 (21.6 ± 19.0)[a]
S6	3 x small (broken)	21.5	Bottom	75	568 (9.5)
S7	Large (unbroken)	21.5	Bottom	75	553 ± 59 (9.2 ± 1.0)
S8	Large (broken)	21.5	Bottom	75	849 (14.2)
S9	3 x small (unbroken)	25.5	Bottom	75	1259 (21.0)[b]
S10	3 x small (broken)	25.5	Bottom	75	1667 (27.8)
S11	Large (unbroken)	25.5	Bottom	75	623 (10.4)[b]
S12	Large (broken)	25.5	Bottom	75	1059 (17.7)

[a] In experiment T28-1 the ignition time was ~35 min compared to 6 min 34 s in T28-2

[b] Only one of two samples ignited

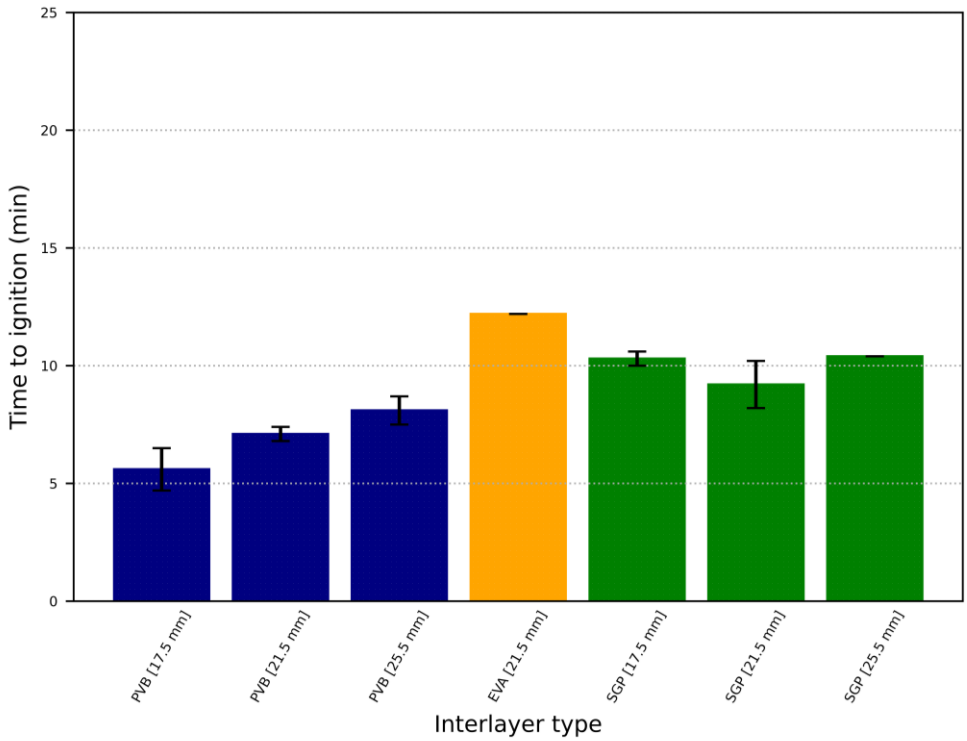

(a)

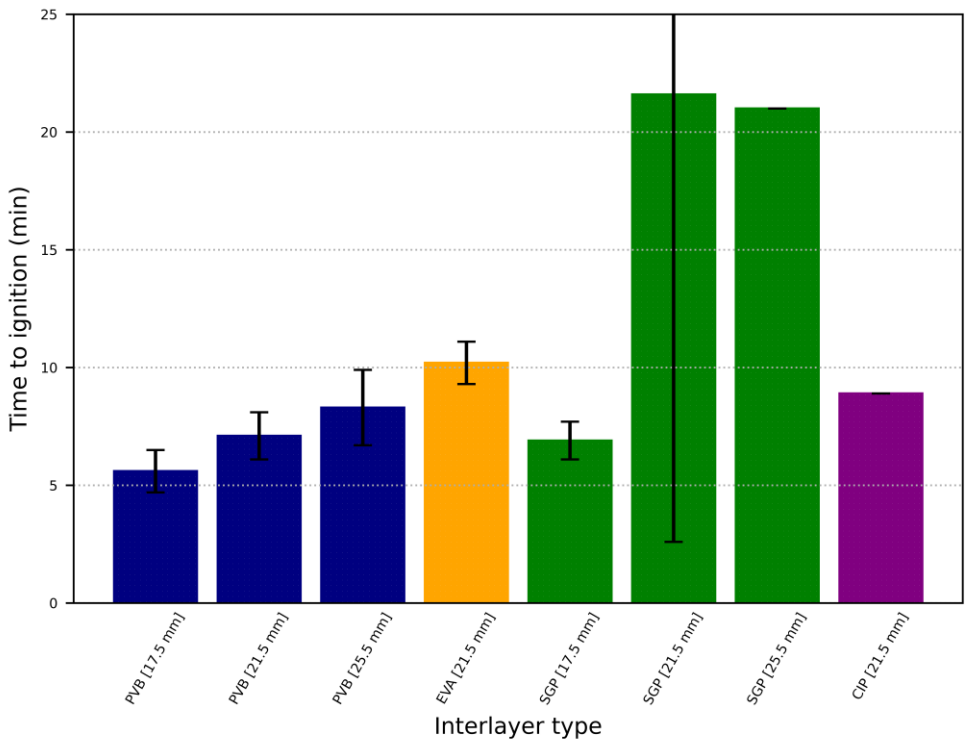

(b)

Figure C2-17 Time to ignition for unbroken panes when exposed to 75 kW/m^2 at the bottom for different inter-layer types and panel thicknesses, (a) large, (b) small (with full range of uncertainty not shown)

Figure C2-17 shows the time to ignition under similar heating conditions (i.e., 75 kW/m^2 heat flux and bottom location) in which the thinner PVB inter-layer panels ignited quicker than the thicker panels. The time to ignition of the PVB inter-layer panels were similar irrespective of the panel size for a given thickness. The panels with the EVA inter-layer have similar times to ignition for small and large panels. The time to ignition results for the

small panels with the SGP inter-layer show significant variation, whereas the larger panels are consistent across the thicknesses.

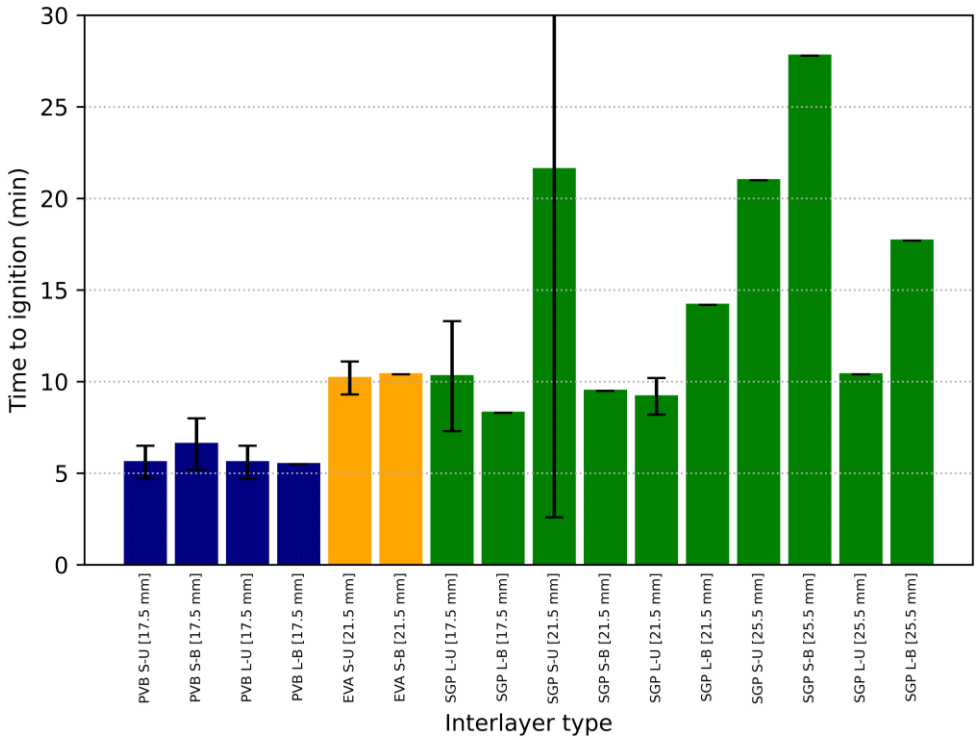

Figure C2-18 Time to ignition for unbroken (U) and broken (B), small (S) and large (L) panels when exposed to 75 kW/m^2 at the bottom for different inter-layer types and panel thicknesses (with full range of uncertainty not shown)

Figure C2-18 shows the time to ignition results as pairs of broken vs unbroken panes. For panels with the PVB and EVA inter-layers the times are similar whether the panes were unbroken or broken, whereas for panels with the SGP inter-layer there is a significant variability both in the times and also whether the broken or unbroken panes ignited first in each pair.

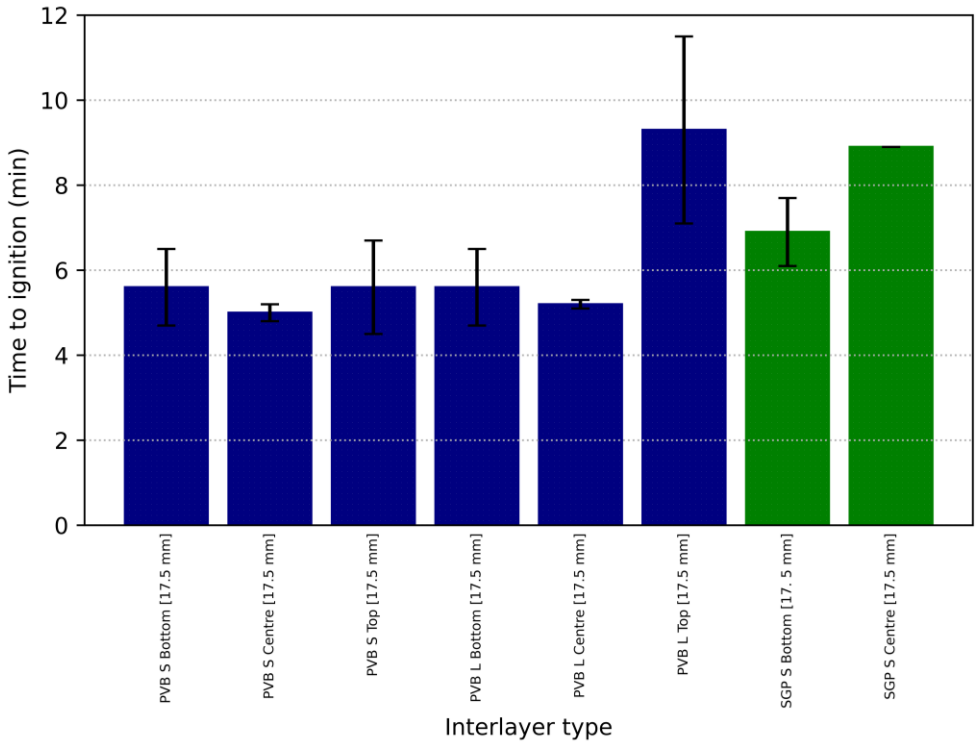

Figure C2-19 Time to ignition for unbroken small (S) and large (L) panels when exposed to 75 kW/m^2 at the three heating locations

Figure C2-19 shows that generally the heating location gives similar time to ignition results for the panels with the PVB inter-layer, other than for the large panels heated at the top. There is more variation when the panels with SGP inter-layer were ignited although the number of experiments was very limited, and the top location was not examined.

- Ignition times generally increases with panel (i.e., glass) thickness and does not change significantly whether the heat exposed pane is broken or unbroken prior to heating.
- The time to ignition of the panels with the PVB inter-layer was generally unchanged when heated in one of the three locations.
- Times to ignition with the SGP inter-layer show substantial variability when panel (glass) thickness, the initial condition of the exposed pane, and somewhat the heating location, are considered.

C2-5.4 Incident heat flux

The bottom panels exposed to 25 kW/m^2 did not ignite and showed no signs of the inter-layer melting and therefore the heat release rate is effectively 0 kW. Figure C2-20 shows the heat release rate curves when the small 17.5 mm thick panels with the PVB inter-layer were exposed to 50 kW/m^2 and 75 kW/m^2 showing a higher peak heat release rate at the higher incident heat flux. It is for this reason that most experiments were carried out at 75 kW/m^2 incident heat flux to maximise the likely measured heat release rate from the samples.

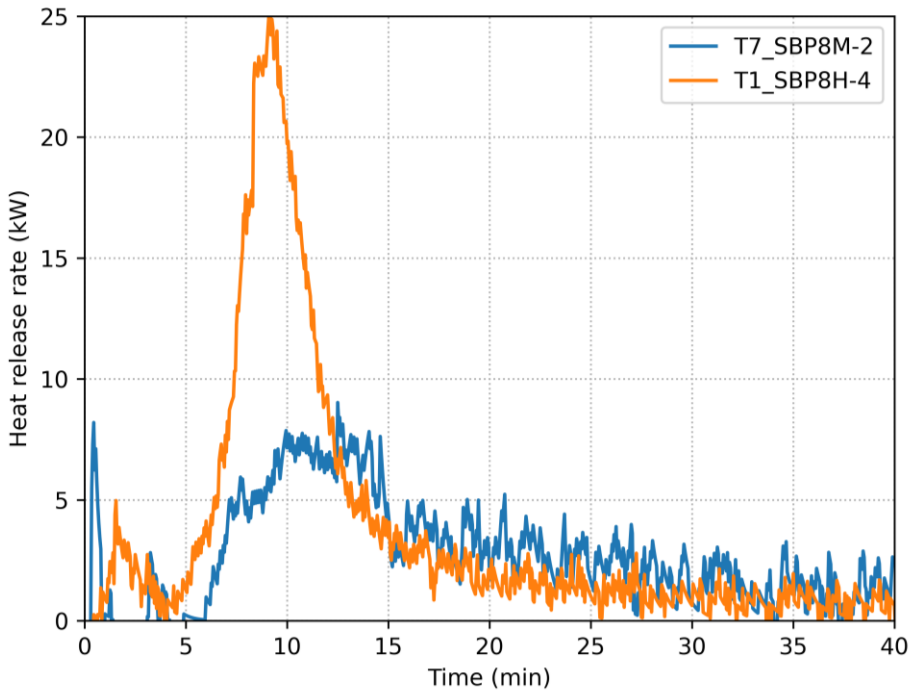

Figure C2-20 Experiments using the small 17.5 mm thick panels with the PVB inter-layer exposed to 50 kW/m^2 (T7_SBP8M-2) and 75 kW/m^2 (T1_SBP8H-4) showing a higher peak heat release rate when exposed to the higher incident flux

C2-5.5 Panel thickness

Here experiments on panels with the same panel size and inter-layer type when heated at the bottom location at 75 kW/m^2 are compared to examine the impact (if any) of panel (and hence pane) thickness. Experiments used panel thicknesses of 17.5, 21.5 and 25.5 mm. In the large panels with the PVB inter-layer (Figure C2-21) the peak heat release rates are in a similar range of 17-21 kW, whereas for the small panels (Figure C2-22) the peak heat release rate range is wider (15-25 kW) with the highest achieved with the 17.5 mm thick panels.

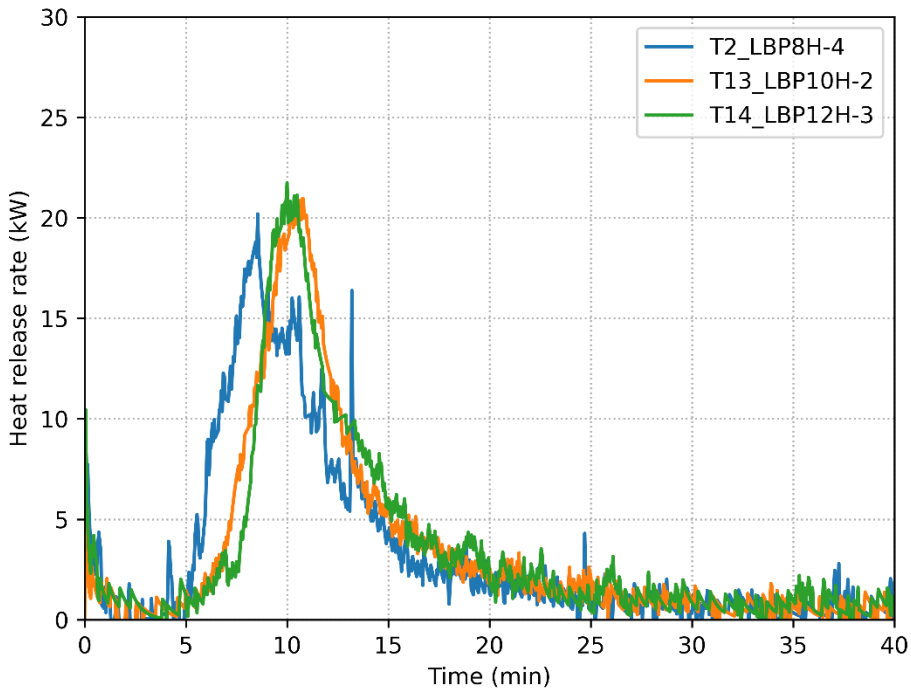

Figure C2-21 Heat release rate results for the large panels with the PVB inter-layer, heated at 75 kW/m^2 at the bottom for 17.5 mm (T2_LBP8H-4), 21.5 mm (T13_LBP10H-2) and 25.5 mm (T14_LBP12H-3) thick panels

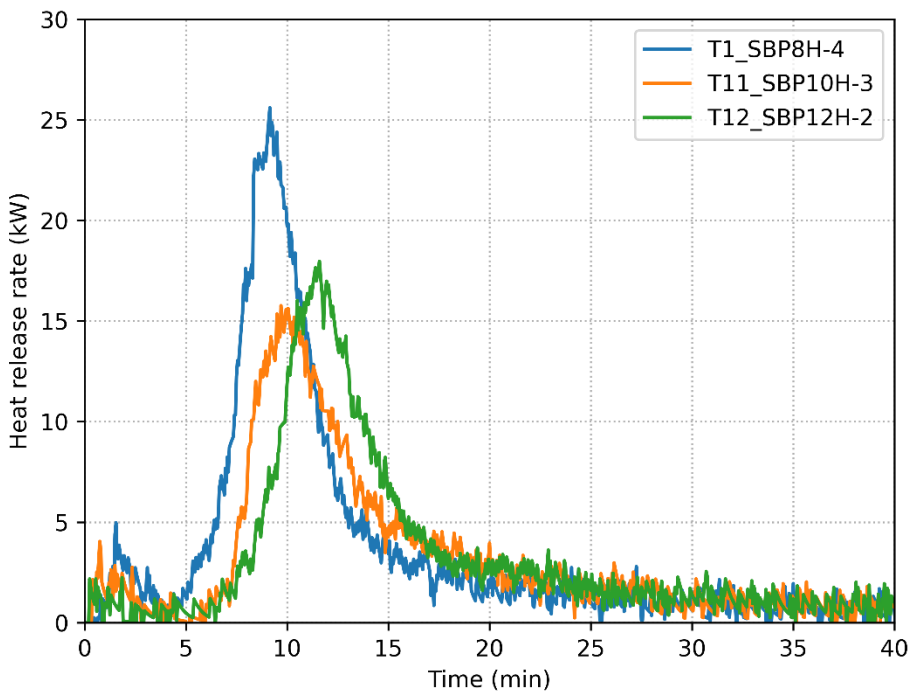

Figure C2-22 Heat release rate results for the small panels with the PVB inter-layer, heated at 75 kW/m^2 at the bottom for 17.5 mm (T1_SBP8H-4), 21.5 mm (T11_SBP10H-3) and 25.5 mm (T12_SBP12H-2) thick panels

It is noted that when total mass loss is compared across the panel thicknesses with the PVB inter-layer (Section C2-5.11) that there is little variation in the results although the 17.5 mm thick panels did show the highest total of the three.

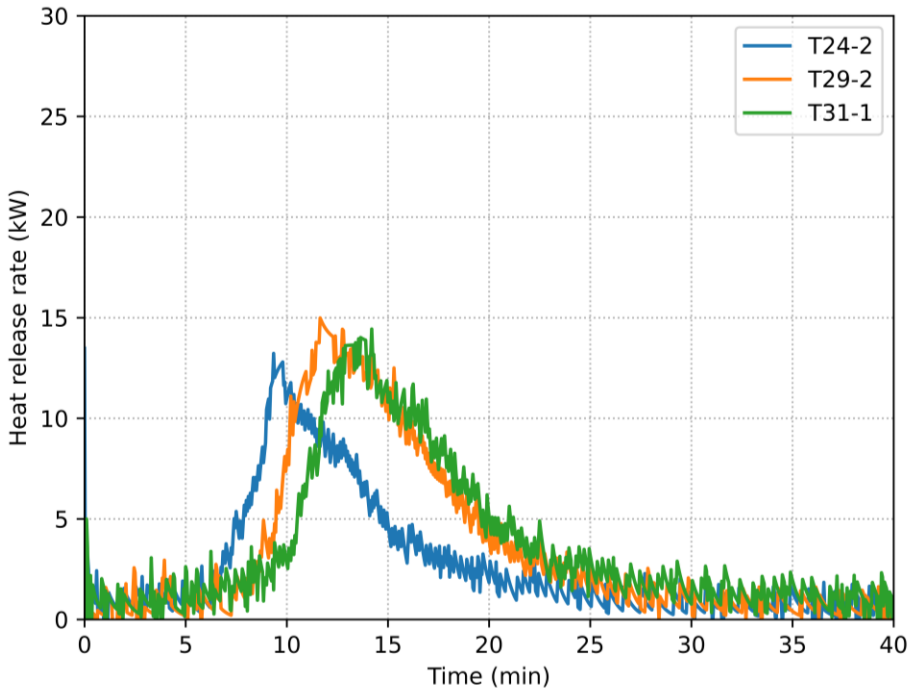

Figure C2-23 Heat release rate results for the large panels with the SGP inter-layer, heated at 75 kW/m^2 at the bottom for 17.5 mm (T24-2), 21.5 mm (T29-2) and 25.5 mm (T31-1) thick panels

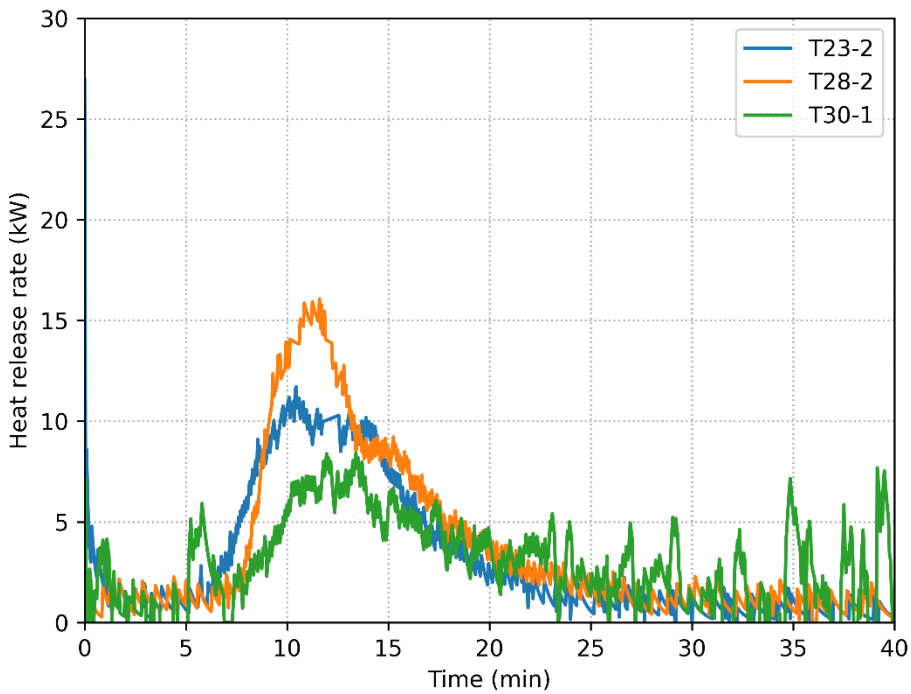

Figure C2-24 Heat release rate results for the small panels with the SGP inter-layer, heated at 75 kW/m^2 at the bottom for 17.5 mm (T23-2), 21.5 mm (T28-2) and 25.5 mm (T30-1) thick panels

Figure C2-23 shows the heat release curves for the large panels with the SGP inter-layer for the panel thicknesses of 17.5 mm, 21.5 mm and 25.5 mm. The peak values fall into a similar range of around 13-15 kW. Figure C2-24 shows a similar analysis for the three thicknesses of small panels with the SGP inter-layer in which the greater heat release rate

curves have been selected (see Section C2-5.8 for a comparison between pairs of unbroken panels with the SGP inter-layer). However, in this case it is the 21.5 mm panel that gives the highest peak heat release rate rather than the thinnest panel as found with the PVB inter-layer.

Overall, the finding from this analysis is that the ***panel thickness may have an influence on the heat release rate with thinner panels having somewhat greater peak values, although results are not particularly compelling.***

C2-5.6 Panel size

The six experiments using the different panel thicknesses with the PVB inter-layer (as discussed in Section C2-5.5) have been paired by panel size (large vs. small) to examine whether there is an impact on the heat release rate. The results presented in Figure C2-25 to Figure C2-27 show that the thinnest small panel gives the largest peak heat release rate whereas in the cases of the thicker panels, the peak is greater for the large panels. These findings are effectively repeating those already presented in Section C2-5.5.

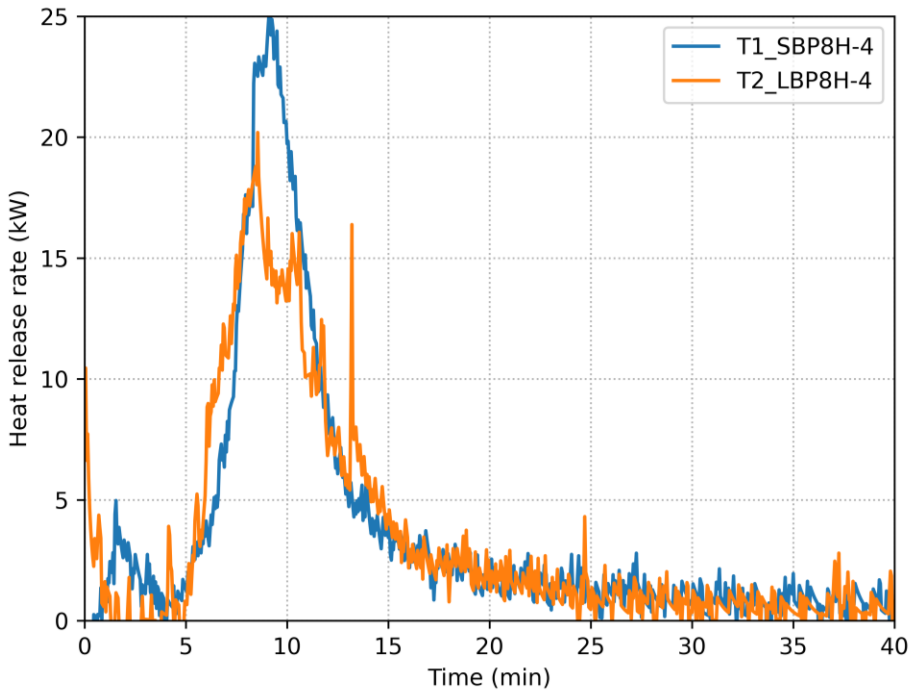

Figure C2-25 Comparison of the heat release rate from small (T1_SBP8H-4) and large (T2_LBP8H-4) 17.5 mm thick panels, with the PVB inter-layer and heated at 75 kW/m^2 at the bottom

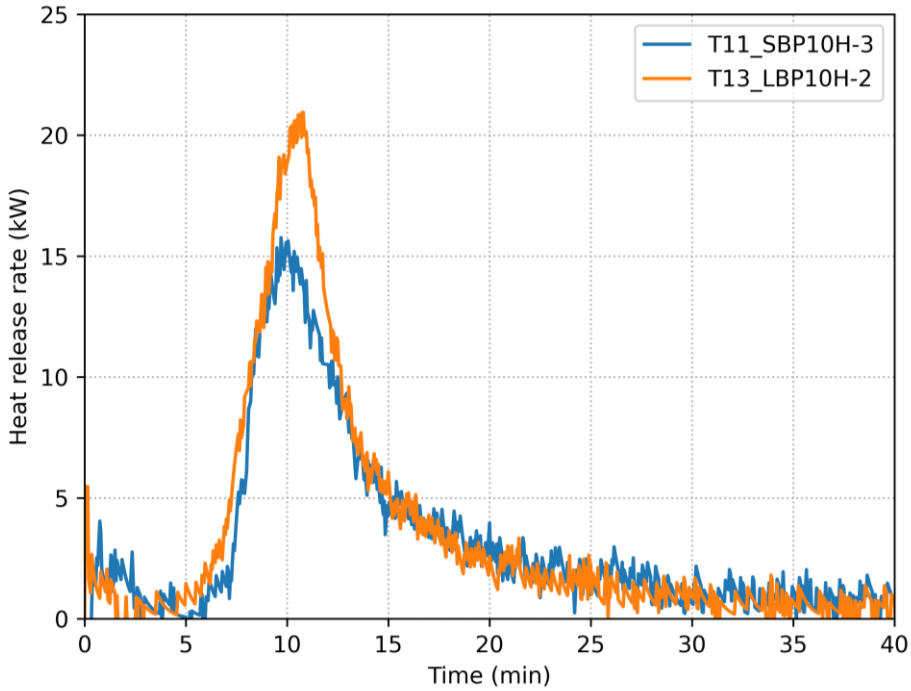

Figure C2-26 Comparison of the heat release rate from small (T11_SBP10H-3) and large (T13_LBP10H-2) 21.5 mm thick panels, with the PVB inter-layer and heated at 75 kW/m^2 at the bottom

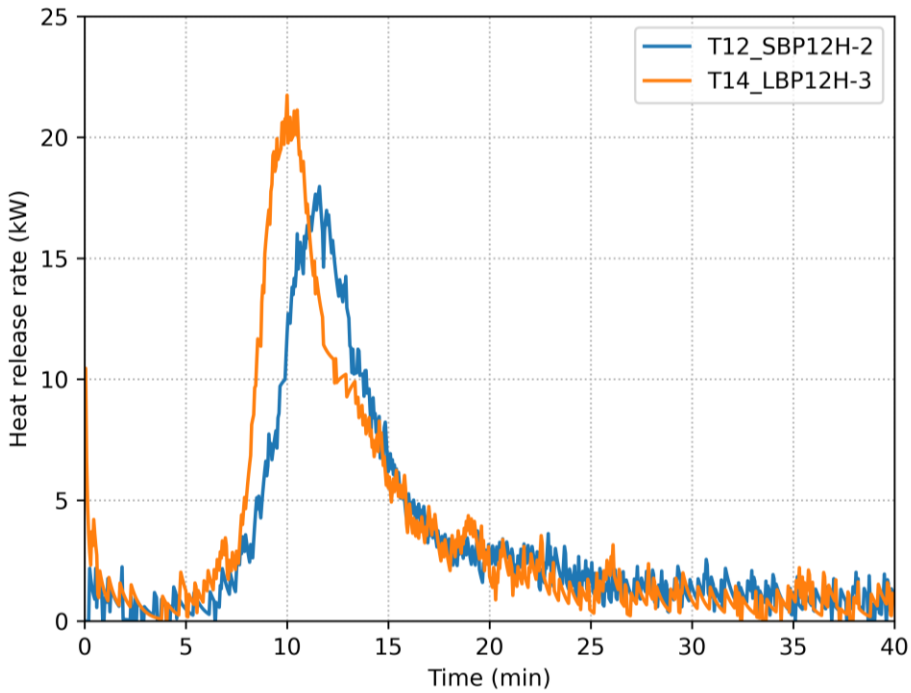

Figure C2-27 Comparison of the heat release rate from small (T12_SBP12H-2) and large (T14_LBP12H-3) 25.5 mm thick panels, with the PVB inter-layer and heated at 75 kW/m^2 at the bottom

The twelve experiments using the different panel thicknesses with the SGP inter-layer have also been paired by panel size (large vs. small). The results presented in Figure C2-28 to Figure C2-30 show that the peak heat release rates are generally higher for the large panels and the 22.5 mm thick panels when compared to the other two sizes. **Larger panels**

generally resulted in a higher peak heat release rate, although the finding is not universal.

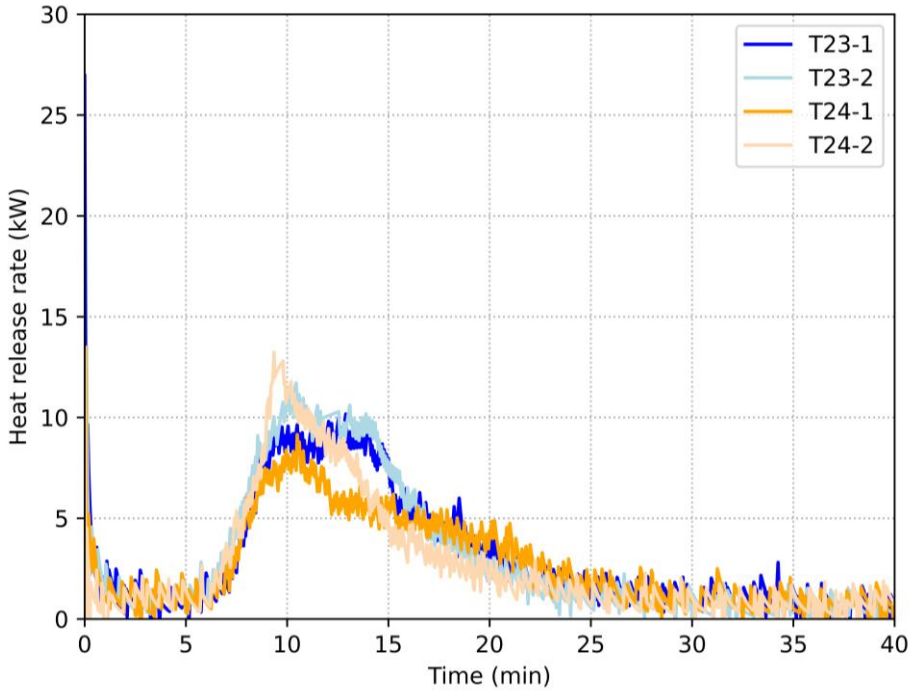

Figure C2-28 Comparison of the heat release rate from small (T23-1 and T23-2) and large (T24-1 and T24-2) 17.5 mm thick panels, with the SGP inter-layer and heated at 75 kW/m^2 at the bottom

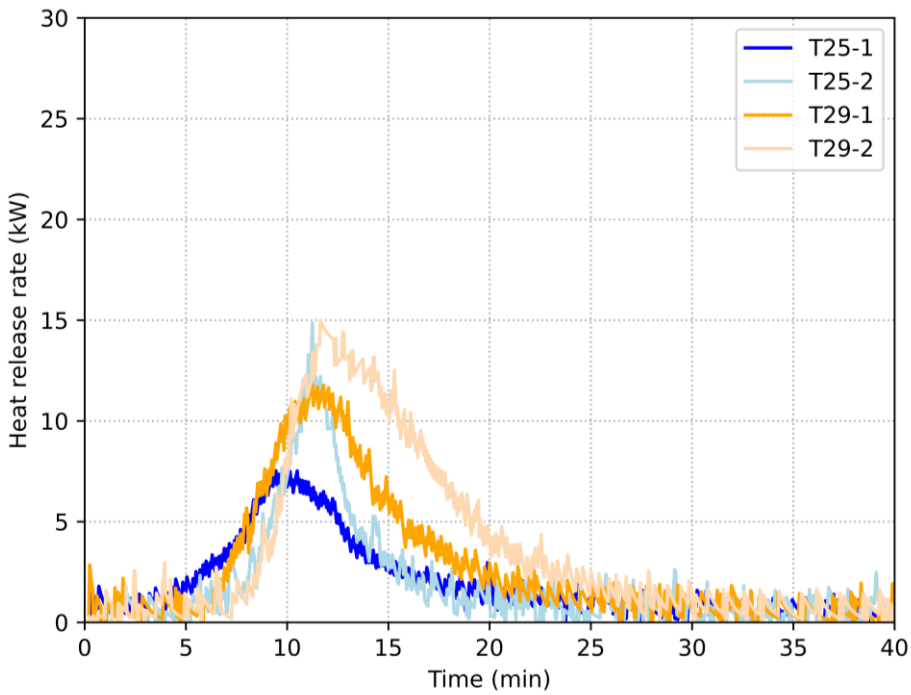

Figure C2-29 Comparison of the heat release rate from small (T25-1 and T25-2) and large (T29-1 and T29-2) 21.5 mm thick panels, with the SGP inter-layer and heated at 75 kW/m^2 at the bottom

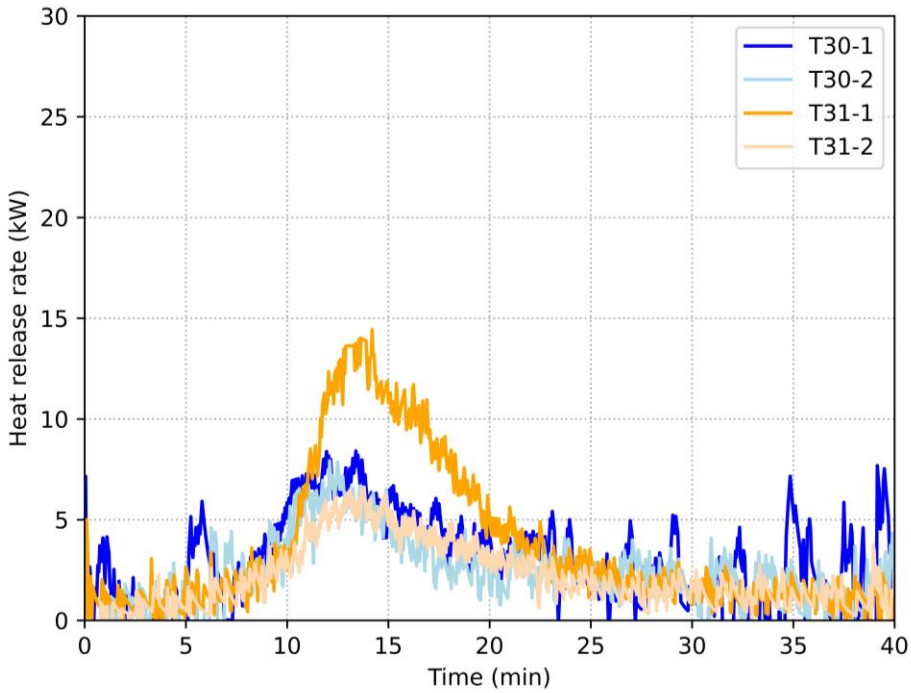

Figure C2-30 Comparison of the heat release rate from small (T30-1 and T30-2) and large (T31-1 and T31-2) 25.5 mm thick panels, with the SGP inter-layer and heated at 75 kW/m^2 at the bottom

Additionally, comparison of the peak heat release rates from the panels with the PVB inter-layer are almost always higher than those with the SGP inter-layer regardless of the panel size or thickness. The heat release rate from the four inter-layer materials is further compared in Section C2-5.10.

C2-5.7 Heating location

Here the impact of the heating location is assessed for both the large and small panels, all 17.5 mm thick with the PVB inter-layer. In the case of the large panels (Figure C2-31), the heat release rate curves show a close match (with the centre location having a marginally higher peak) whereas for the small samples (Figure C2-32) the peak heat release rate is a maximum of around 30 kW when the central pane was heated, reducing to 20 kW when the top pane was heated. Further analysis of heating location is presented in Section C2-5.11.

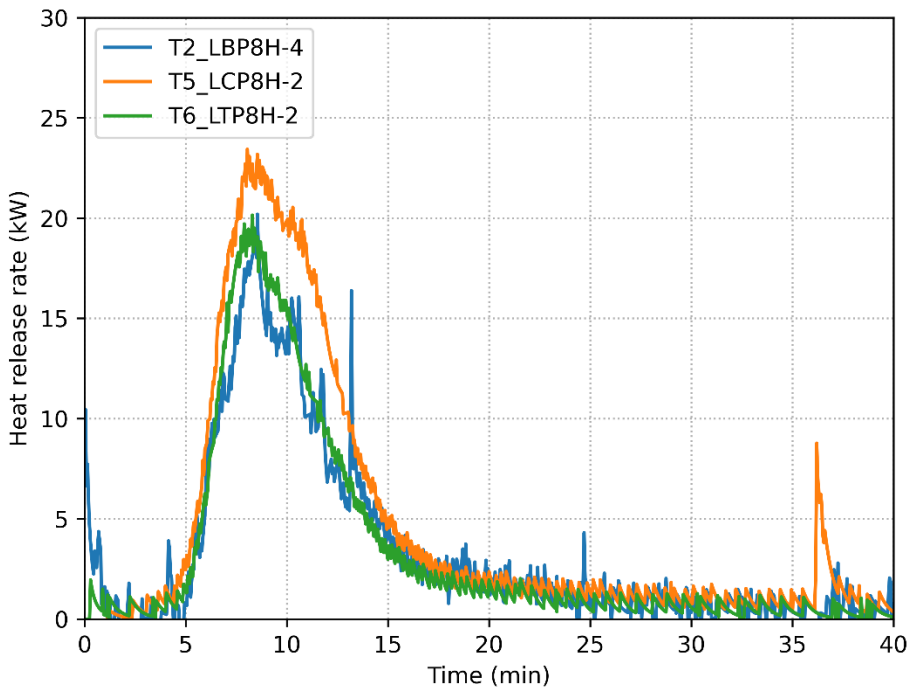

Figure C2-31 Comparison of the heat release rate from the large 17.5 mm thick panels with the PVB inter-layer when the 75 kW/m^2 heating exposure was at the bottom (T2_LBP8H-4), centre (T5_LCP8H-2) and top (T6_LTP8H-2)

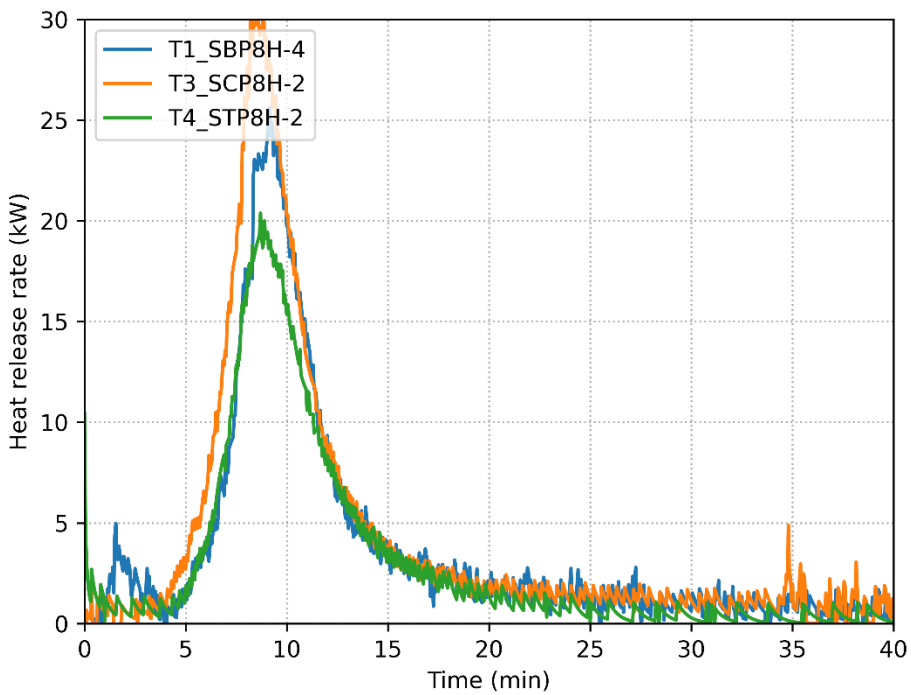

Figure C2-32 Comparison of the heat release rate from the small 17.5 mm thick panels with the PVB inter-layer when the 75 kW/m^2 heating exposure was at the bottom (T1_SBP8H-4), centre (T3_SCP8H-2) and top (T4_STP8H-2)

The highest peak heat release rate of just over 30 kW across all experiments was obtained in T3_SCP8H-2. Figure C2-33 shows the flames on the panel at around the point the peak was achieved in which burning PVB is seen running down the exposed glass face.

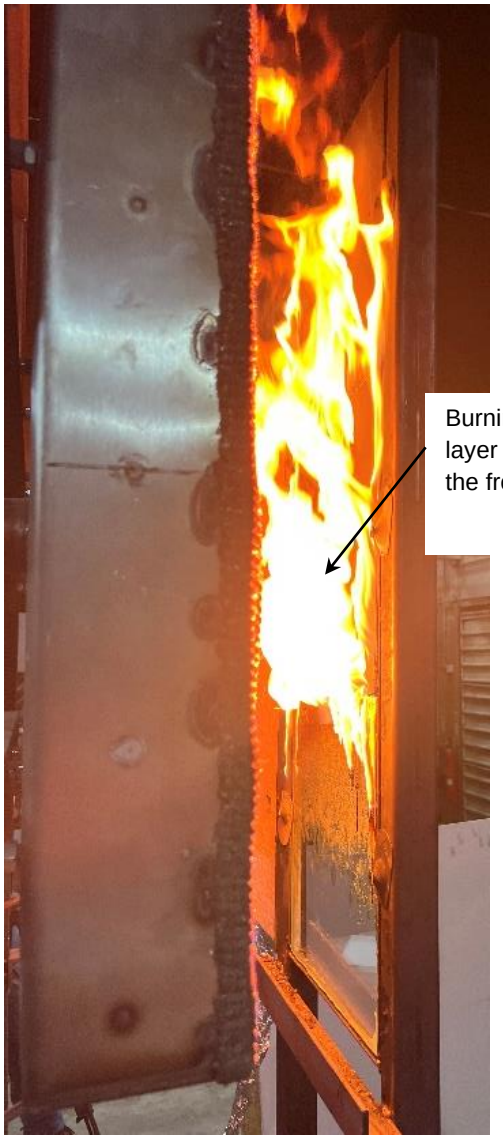

Figure C2-33 Photograph of 17.5 mm thick panel with the PVB inter-layer when heated at 75 kW/m^2 in the centre (T3_SCP8H-2) at around 7 min showing the peak of flaming

C2-5.8 Exposed pane breakage

In many experiments the front heat exposed pane in the panel/s did not break during the radiant heat exposure. To examine whether having the heat exposed pane in the panel broken prior to the radiant heat exposure impacted on the heat release rate, some experiments were compared with and without the front (exposed side) pane initially shattered. As noted previously, broken panels with an initially broken exposed pane are labelled with a ‘B’ suffix.

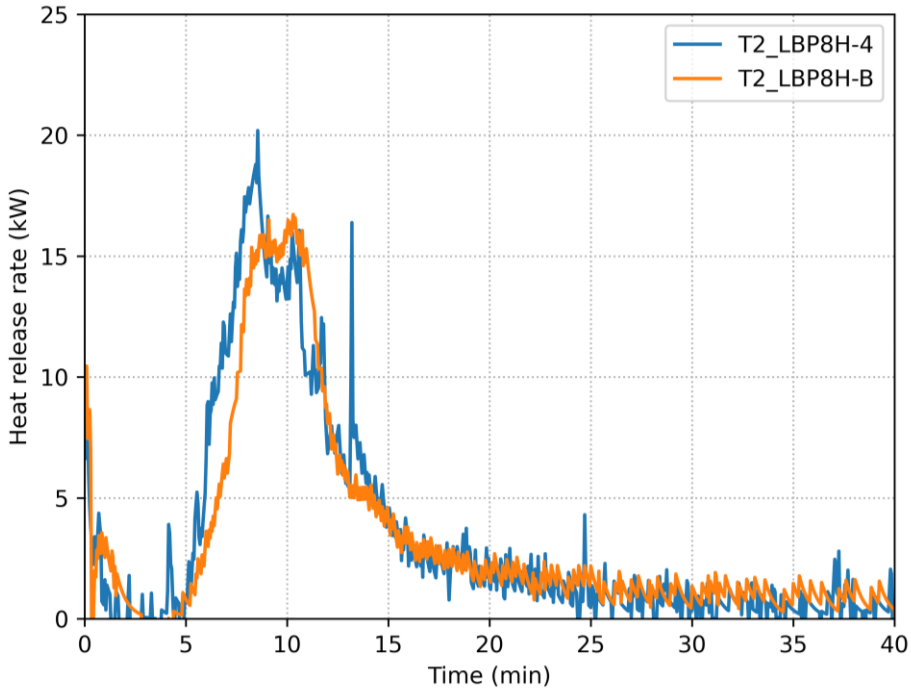

Figure C2-34 Comparison of the heat release rate from the 17.5 mm thick large panels with a broken and unbroken heat exposed pane with the PVB inter-layer when heated at the bottom at 75 kW/m^2

Figure C2-34 shows the HRR for large 17.5 mm thick glass panel samples with PVB inter-layer, heated at 75 kW/m^2 at the bottom in which the heat release rate curves are almost identical.

In the case of the 25.5 mm thick panel with the SGP inter-layer, the large panels (Figure C2-36) resulted in a noticeably higher heat release rate measured in one of the unbroken samples when compared to the other two. Similarly, an unbroken small 21.5 mm thick panel with the SGP inter-layer (Figure C2-35b) gave the highest peak heat release rate compared to another unbroken sample and a broken sample. Conversely, the highest peak heat release rate was obtained with the 17.5 mm thick broken panel with the SGP inter-layer (Figure C2-35a).

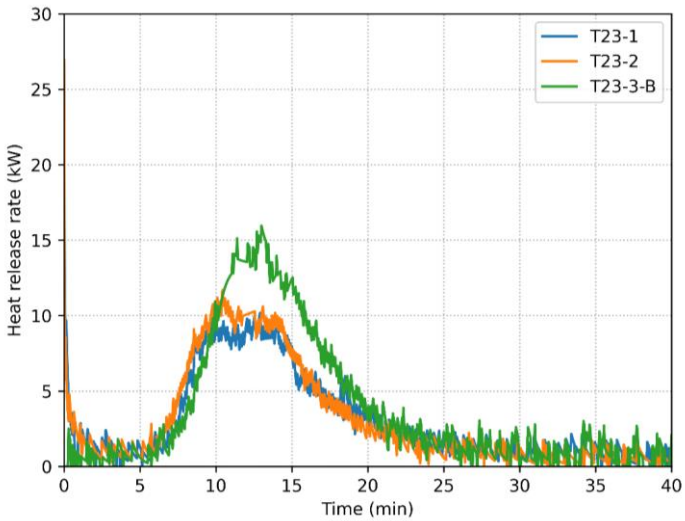

(a)

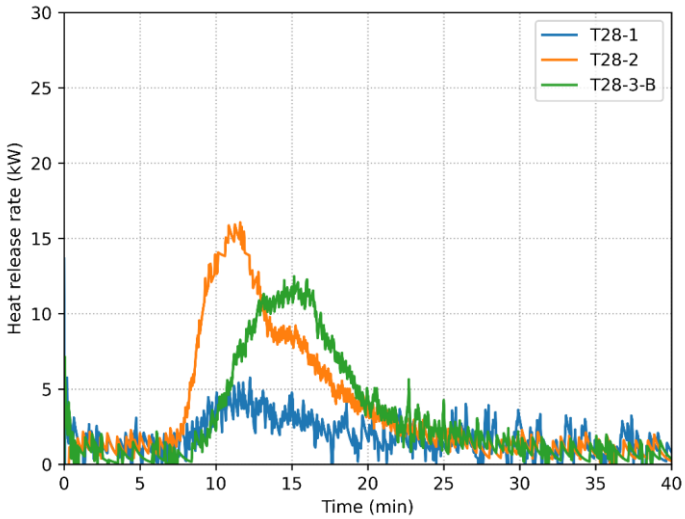

(b)

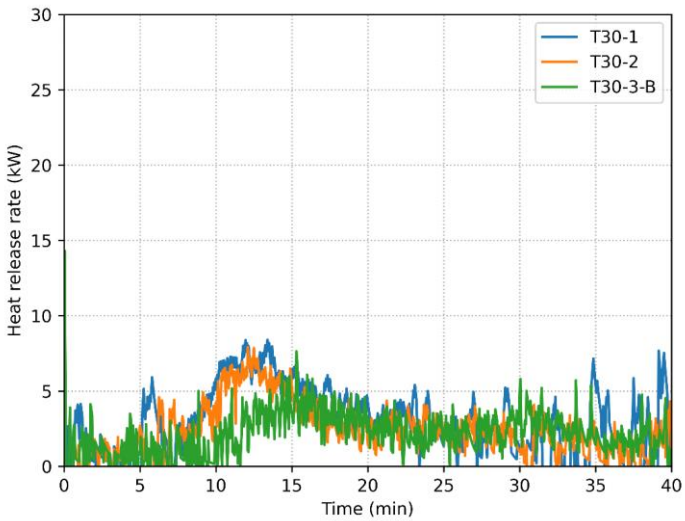

(c)

Figure C2-35 Comparison of the heat release rate from the small panels with a broken and unbroken heat exposed pane with the SGP inter-layer when heated at the bottom at 75 kW/m^2, (a) 17.5 mm thick, (b) 21.5 mm thick, (c) 25.5 mm thick

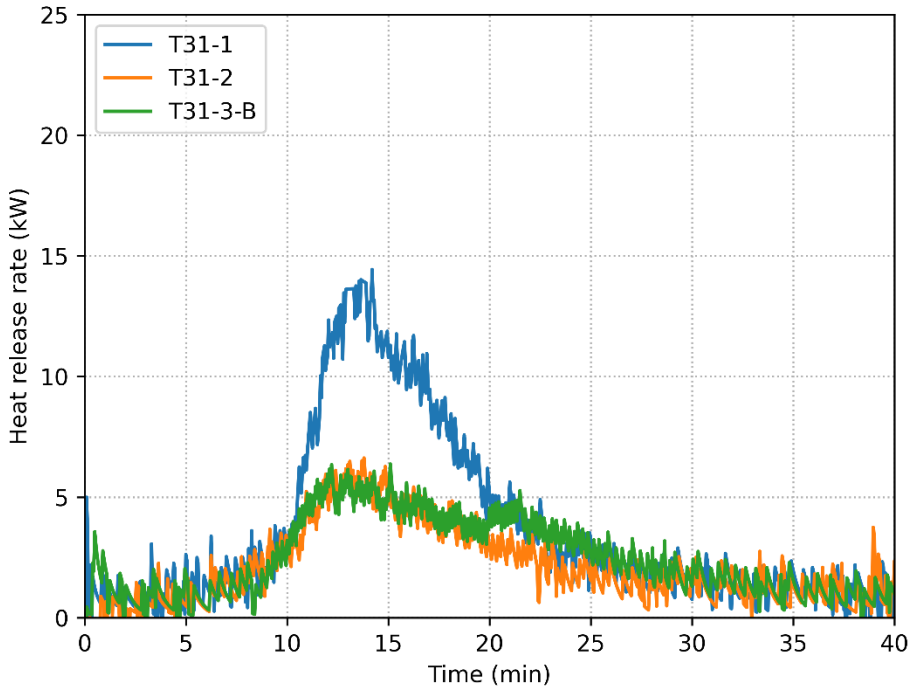

Figure C2-36 Comparison of the heat release rate from the 25.5 mm thick large panels with a broken and unbroken heat exposed pane with the SGP inter-layer when heated at the bottom at 75 kW/m^2

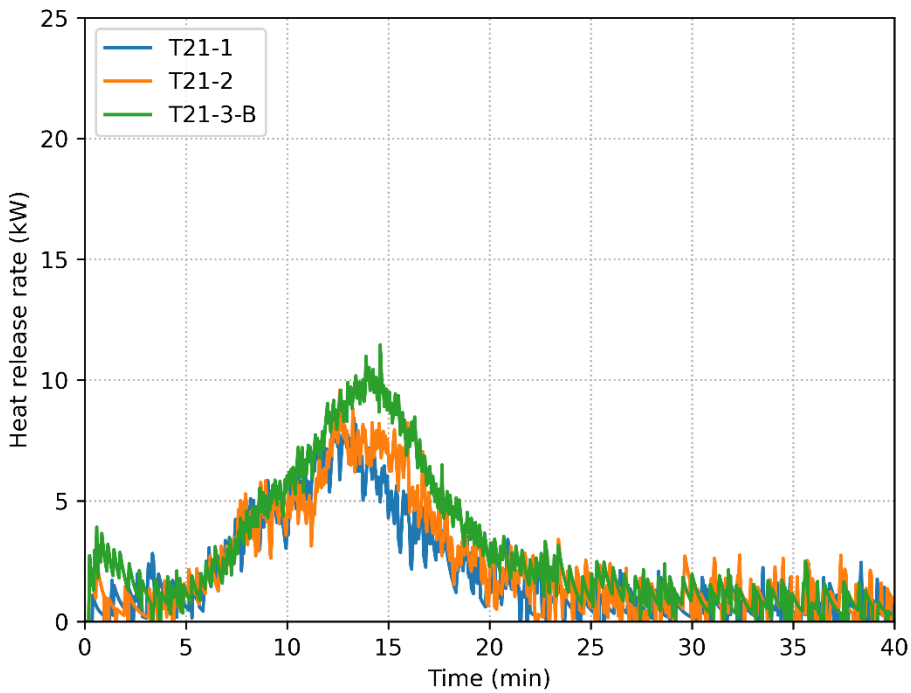

Figure C2-37 Comparison of the heat release rate from the 21.5 mm thick small panels with a broken and unbroken heat exposed pane with the EVA inter-layer when heated at 75 kW/m^2

Figure C2-37 shows EVA, small glass panels heated at 75kW/m^2. Whereas the panels with the PVB and SGP inter-layers were all heated at the bottom, in this case the broken pane experiment had the middle panel heated whereas the unbroken experiments had the bottom panels heated.

The results show that in general the heat release rate may differ whether the heat exposed pane of glass is broken ahead of the experiment or is allowed to break (should it do so) during the experiment. The findings are overall inconclusive; however, ***the severity of the fire is generally not significantly different whether the heat exposed pane is broken or not ahead of its exposure***. It has not been possible to assess whether the fire severity differs should exposed unbroken panes shatter during heating as this did not occur in any of the experiments carried out herein.

C2-5.9 Repeatability

Three experiments using the small 17.5 mm thick panels, with the PVB inter-layer, heated at the bottom at 75 kW/m^2 were carried out to assess repeatability. Figure C2-38 shows similar heat release rate results confirming that the experiments were adequately repeatable. Further examples of repeatability have been shown elsewhere (e.g., Figure C2-35 and Figure C2-37) although it was not always the case when the SGP inter-layer was used (i.e., Figure C2-36).

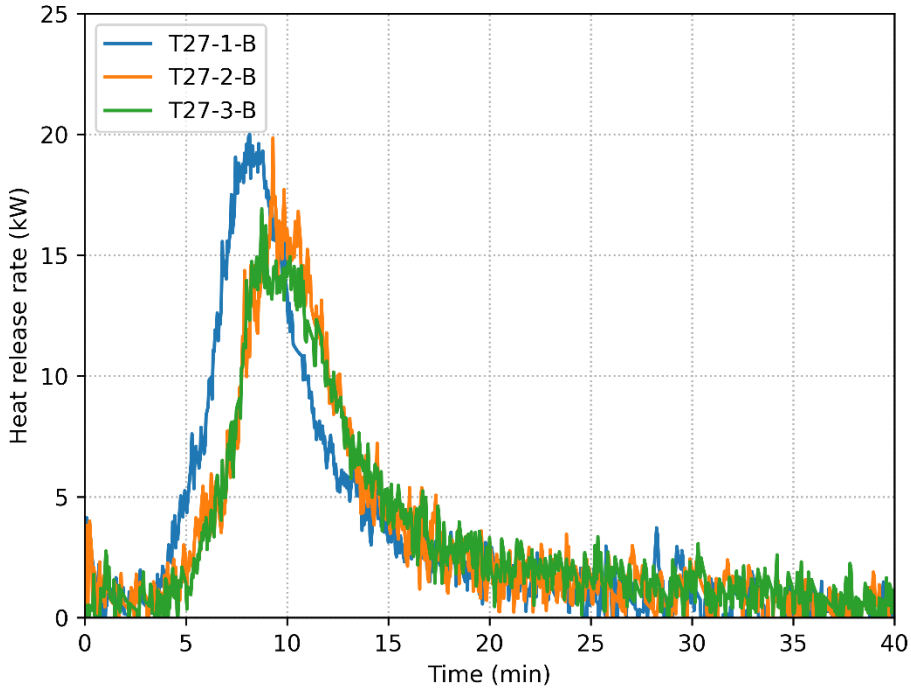

Figure C2-38 Comparison of three repeated experiments for 17.5 mm thick panel, PVB inter-layer with a broken pane, small samples heated at the bottom at 75 kW/m^2

C2-5.10 Inter-layer type

The effect of inter-layer type on the heat release rate is presented in Figure C2-39 which shows that similar curves were generated by the 21.5 mm thick panels with the EVA and CIP inter-layers, with a peak of no greater than around 8 kW, when compared to around a peak of 15 kW for the panels with the PVB and SGP inter-layers. However, in Figure C2-40 the heat release rate from the panel with the PVB inter-layer has a peak value around 1.5 times that of the panel with the SGP inter-layer. Additional comparison between the PVB and SGP inter-layers has already been shown in Section C2-5.6, where again the PVB

inter-layer exhibits higher peak heat release across all panel thicknesses and panel sizes. ***The results confirm that overall, the PVB inter-layer will likely generate the highest peak heat release rate of the four inter-layer types*.**

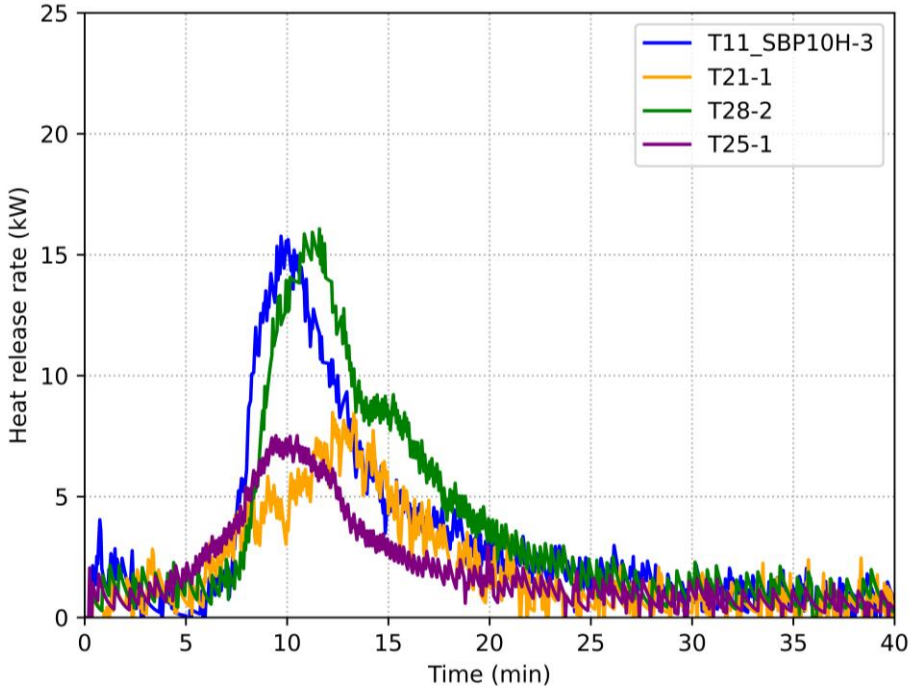

Figure C2-39 Comparison of the heat release rate of the four inter-layer types: PVB (T11_SBP10H-3), EVA (T21-1), SGP (T28-2) and CIP (T25-1) when the unbroken 21.5 mm thick small panels were exposed to 75 kW/m^2 at the bottom

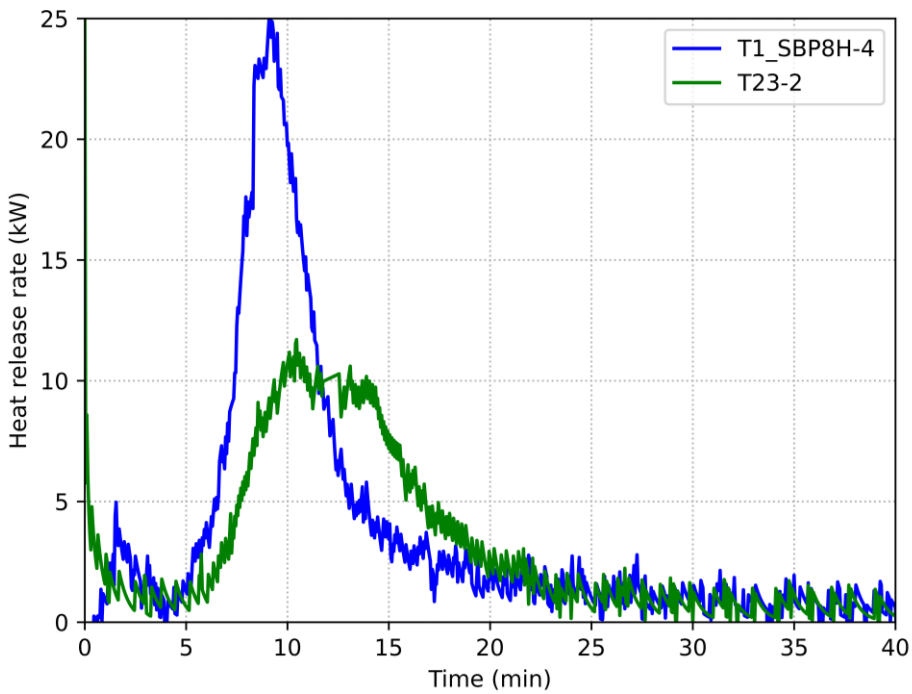

Figure C2-40 Comparison of the heat release rate for two inter-layer types: PVB (T1_SBP8H-4) and SGP (T23-2) when the unbroken 17.5 mm thick small panels were exposed to 75 kW/m^2 at the bottom

C2-5.11 Total mass loss

Given the mass loss rate is not available for all the experiments, it is informative to compare similar experiments in terms of the total mass loss to assess whether it is likely that similar mass loss rates could have been expected. In this section experiments in which the mass loss rate was recorded are shown by filled bars whereas in those experiments in which only the total mass loss is available are shown by hatched bars. As illustrated below (Figure C2-41 to Figure C2-43), ***comparing equivalent experimental conditions shows consistency in terms of total mass loss*.**

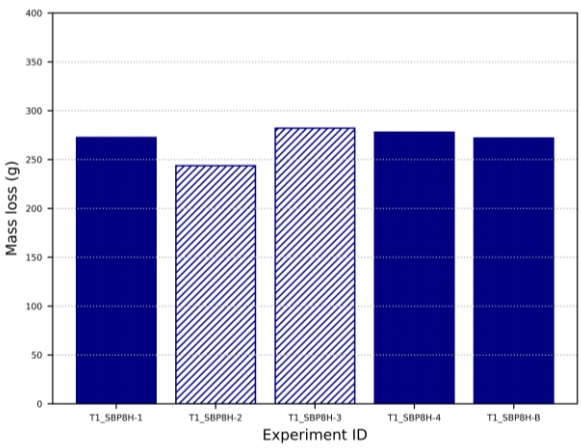

(a)

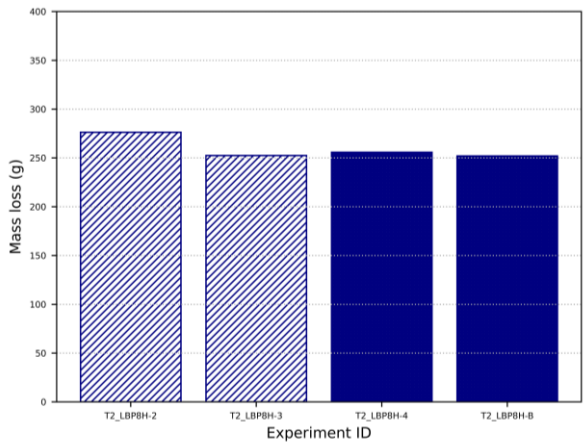

(b)

Figure C2-41 Total mass loss of the 17.5 mm thick panels with the PVB inter-layer, heated at 75 kW/m^2 at the bottom, (a) small panels, unbroken (T1_SBP8H-1 to T1_SBP8H-4) and broken (T1_SBP8H-B), (b) large panels, unbroken (T2_LBP8H-2 to T2_LBP8H-4) and broken (T2_LBP8H-B)

Figure C2-41 shows consistency between the measured total mass loss with a mean and standard deviation of 269 ± 13 g for the small glass panels and 259 ± 10 g for the large glass panels (the mass was not recorded for T2_LBP8H-1).

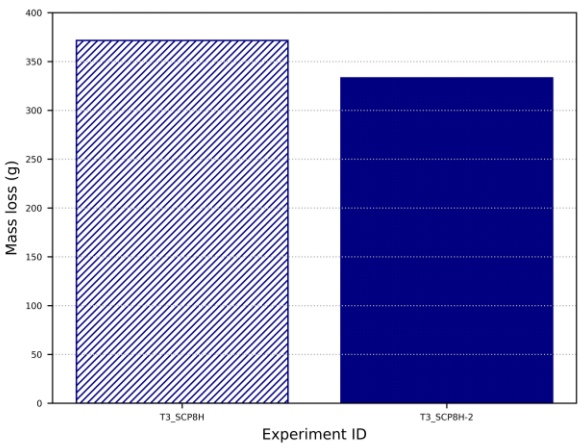

(a)

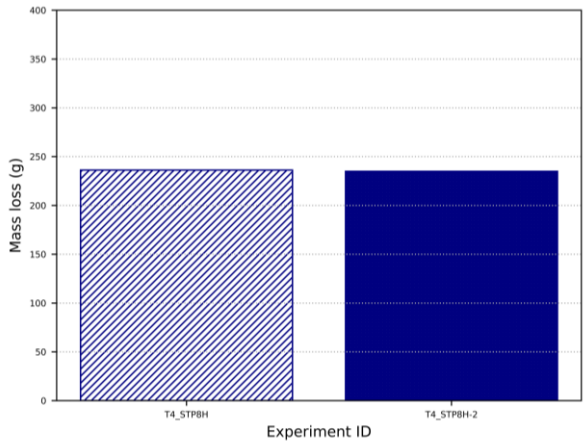

(b)

Figure C2-42 Total mass loss of the 17.5 mm thick panels with the PVB inter-layer, heated at 75 kW/m^2 at the (a) centre, (b) top

Figure C2-42 shows the total mass loss when heating the centre of the small glass panels, with a mean and standard deviation of 352 ± 19 g and heating the top small panels, with a mean and standard deviation of 235 ± 1 g. When comparing across the three heating locations (bottom, centre and top) for the small panes the maximum total mass loss occurred in the centre and minimum when heating the bottom. The difference is 117 g – not an insignificant amount. Given the results from Section C2-5.7 along with the findings herein suggests that ***a fire is likely to achieve its highest heat release rate when the array of three small panels have the centre panel exposed to the radiant source***.

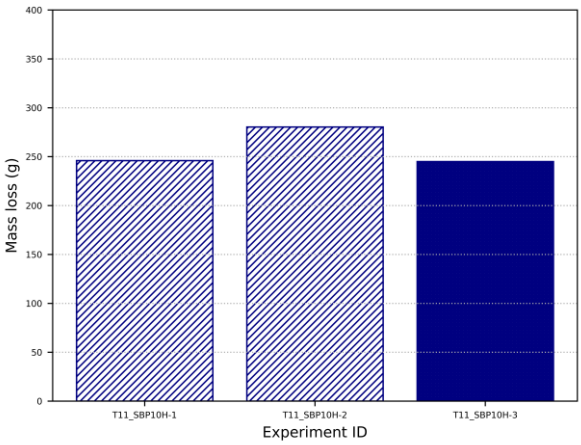

(a)

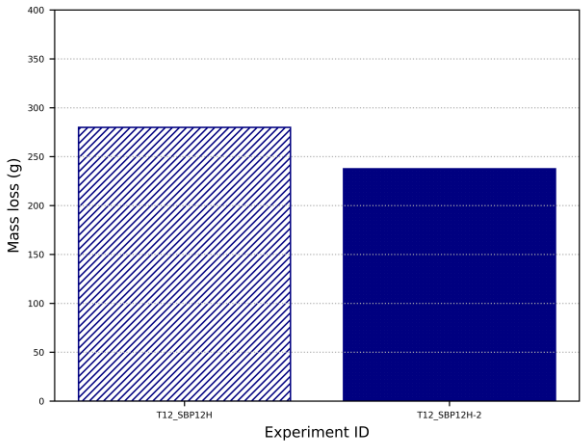

(b)

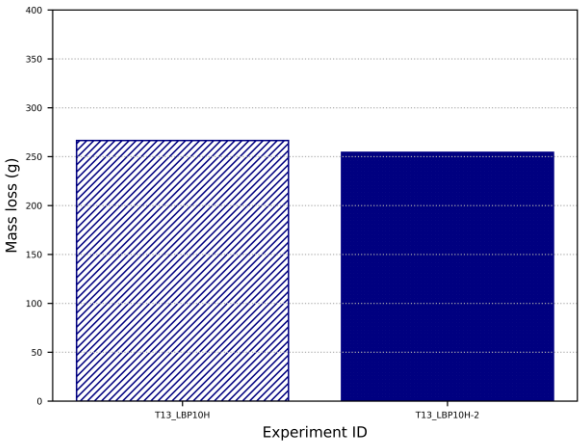

(c)

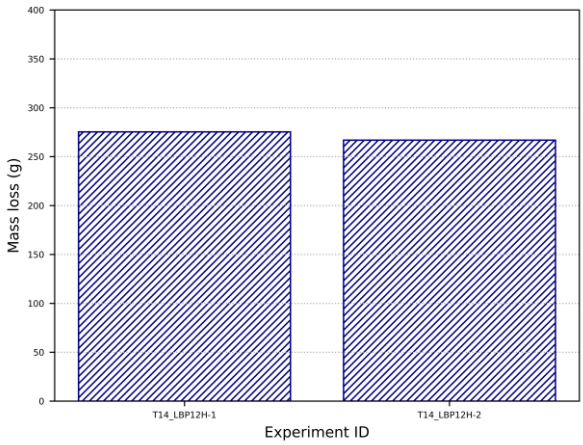

(d)

Figure C2-43 Total mass loss of the panels with the PVB inter-layer, heated at 75 kW/m^2 at the bottom, (a) small panels, 21.5 mm thick, (b) small panels, 25.5 mm thick, (c) large panels, 21.5 mm thick, [d] large panels, 25.5 mm thick

Figure C2-43 shows the total mass loss for the 21.5 mm thick panels with the PVB inter-layer as 257 ± 16 g and for the 25.5 mm thick small panels as 259 ± 21 g. In comparison it is shown in Figure C2-41a that the mass loss for the 17.5 mm think panels was 269 ± 13 g. Figure C2-43 also shows the results for the large panel experiments in which the mean and standard deviation total mass losses are 261 ± 6 g and 271 ± 4 g for the 17.5 mm and 25.5 mm thick panels respectively. ***The results suggest that the panel thickness and sizes had little impact on the total mass loss***.

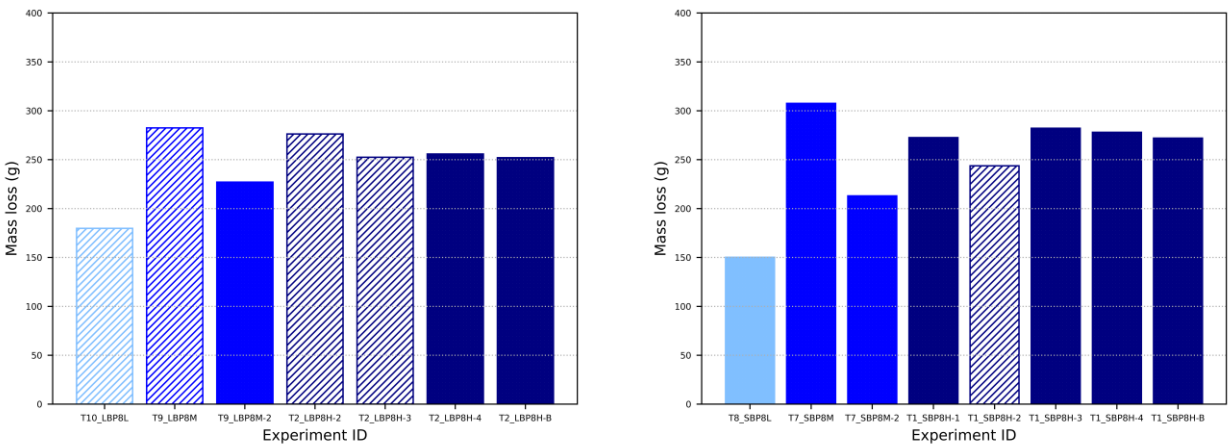

(a) (b)

Figure C2-44 Total mass loss of the 17.5 mm thick panels with the PVB inter-layer, heated at the bottom at 25 kW/m^2 (light blue), 50 kW/m^2 (blue) and 75 kW/m^2 (dark blue), (a) large panels, (b) small panels

Figure C2-44 shows the total mass loss for the large and small panels at the three exposure heat fluxes. When exposed to 25 kW/m^2 the total mass loss is clearly less that at 50 kW/m^2 and 75 kW/m^2. The difference in total mass loss at the two higher heat fluxes is less. Interestingly for the small panels, exposure to 50 kW/m^2 is where an experiment has highest total mass loss has been measured across both panel sizes and heat fluxes. ***The exposure heat flux impacts on the total mass loss although the difference between 50 kW/m^2 and 75 kW/m^2 is less clear than when compared to 25 kW/m^2***.

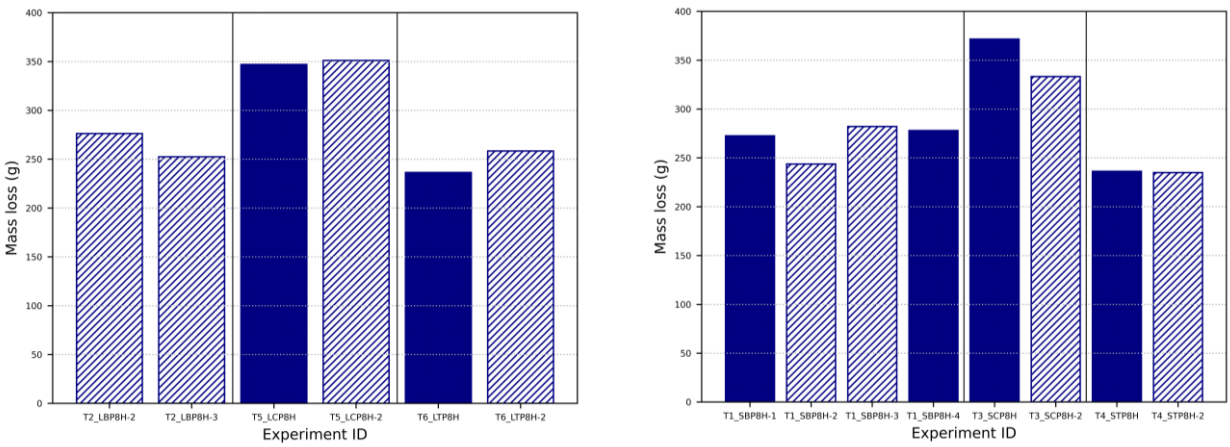

(a) (b)

Figure C2-45 Total mass loss of the 17.5 mm thick panels with the PVB inter-layer, heated at 75 kW/m^2 at the bottom, centre and top heating location (a) large panels, (b) small panels

Figure C2-45 shows the effect on the total mass loss of heating the small and large panels at the bottom, centre and top location. In both groups of experiments ***the centre location gave the highest total mass loss, followed by the bottom and then the top.*** Whether the same impact is true of thicker panels of laminated glass has not been investigated in this study. Had this result been known prior to the experimental programme it may have

been useful to have heated more panels in the centre in order to obtain more data with potentially the highest total mass loss. It is posited that the reason for the higher mass loss in the case of the centre heating location is because the energy from the radiant panels would impact the lower portion of the top glass panel, and the upper portion of the bottom glass panel, as well as the centre glass panel. On the other hand, when the heating was on the top or bottom glass panel then a proportion of the radiant energy would not have been heating any of the glass.

C2-6. Key findings and comparisons

C2-6.1 Summary

- For panels with PVB and EVA inter-layers the results show that time to ignition generally increases with thickness and does not change significantly whether the heat exposed pane is broken or unbroken prior to heating (see Section C2-5.3). Furthermore, the time to ignition of the panels with the PVB inter-layer was generally unchanged when heated in one of the three locations. For panels with the SGP inter-layer, times to ignition show substantial variability both when panel thickness, the initial condition of the exposed pane, and somewhat the heating location, are considered.
- Although the SGP was found to have the highest calorific value of the four inter-layer materials (Section C2-3), the panels with the PVB inter-layer show the highest peak heat release rate when compared to panels using the other three laminate types (see Section C2-5.10 and also Section C2-5.6).
- The thickness of the panel (i.e., the thickness of panes of glass) may have some impact on heat release rate, although the results are generally inconclusive when it comes to peak values.
- Breaking the front pane of glass prior to exposure to the radiant heat flux can make a difference to the burning characteristics of a panel (see Section C2-5.8), although it does not necessarily result in a more severe fire when assessed in terms of its heat release rate. It has not been possible to evaluate whether fire severity differs should exposed unbroken panes shatter during heating.
- Results both in terms of total mass loss and also peak heat release rate (see Section C2-5.7 and Section C2-5.11, Figure C2-45) suggest that heating the panels in the centre would likely give the highest values when compared to heating at the bottom or at the top.
- The larger laminated glass panels with the PVB and SGP inter-layer generally resulted in a higher peak heat release rate, although the finding is not universal (see Section C2-5.6).
- The reaction-to-fire performance of laminated glass with an SGP inter-layer has greater variability when compared to PVB. Among the tested inter-layers, the PVB inter-layer stands out as having the highest occurrence of flame spread or flame flashing at a higher location when compared to the other inter-layer types.
- Overall panels with the PVB inter-layer show a faster time to ignition and higher peak heat release rate when compared to panels that used the other three inter-layer types. This would suggest that the experiments that used the PVB inter-layer provide the more conservative assessment of balcony balustrade performance.

C2-6.2 Comparisons

Rickard et al. [1] used radiant heat exposures of 25 kW/m^2, 50 kW/m^2 and 75 kW/m^2 as in the case the experiments presented herein whereas the SBS sponsored work given in Appendix III used 50 kW/m^2 throughout.

In both the SBS sponsored work and that of Rickard et al. [1] it was found that it most cases the exposed pane of glass was observed to break when exposed to heating. This was not the case with the experiments discussed herein and therefore it was decided for some experiments to manually shatter the front pane prior to exposure to examine the effect of this. One reason for the difference might be as a result of the panel edge conditions and the mounting to the frame although it is not possible to make any definitive statement.

The SBS sponsored work found that the burning of the lower panels did not lead to the ignition of the uppermost panel. This study also found a similar result, particularly since the burning of the melted inter-layers predominantly occurred at the edge of the samples.

The SBS sponsored work found that individual panels with thinner glass had a higher heat release rate, however, when tested as part of an overall assembly its behaviour was similar to that of panels with other glass thicknesses. The findings from this work also suggest that glass thickness may have some influence on heat release rate, with thinner panels having somewhat higher peak values.

The highest peak heat release rate recorded in Appendix III is around 22.4 kW compared with just over 30 kW in the present study. The experiment in Appendix III consisted of a single panel, open on all edges to permit dripping and burning at the side. However, as noted previously, peak heat release rates in this work did not generally exceed 20 kW and are therefore similar to that measured to the highest value given by the SBS work. Rickard et al. [1] estimated the average heat release rates for samples with a PVB inter-layer were around 6 kW at 50 kW/m^2 and 75 kW/m^2, albeit their samples were only a single 300 × 300 mm panel. Scaling Rickard et al.'s panel area to 500 mm × 500 mm gives a heat release rate of 16.7 kW which is comparable to the findings herein.

C2-6.3 Recommendations

As noted in Section C2-1.1, the findings from this study are to be used in the preparation of a campaign of large-scale balcony fire spread experiments. The configuration will have a stack of three balconies in which some experiments will have a laminated glass balustrade fitted. The following provide an initial set of recommendations arising from this report with respect to these balcony experiments:

- It is recommended that only PVB inter-layer needs to be assessed for the balustrades as this will give the more onerous conditions. If the impact of dripping is of specific interest, then the use of SGP inter-layer should be considered.
- Having the laminated glass panels configured with spider or spigot fixing methods such as (Figure C2-46) would expose the bottom edge which may induce dripping of

the inter-layer. Should any potential dripping need to be mitigated than a channel may be a viable option. It is recommended that either a spider or spigot fixing be used in discussion with the project Expert Review Panel (ERP) on which would be the most representative of common practice.

- For the panel thickness it would appear this is not a critical factor although using thinner panels may result in a higher peak heat release rate. It is recommended that the thinnest panel that is typically used for balcony balustrades be used in the proposed experiments.
- It is recommended that the laminated glass panels should be allowed to break on their own accord (should they end up doing so) and there is no need to consider shattering panes prior to the fire. This would represent the normal course of events in real fires.

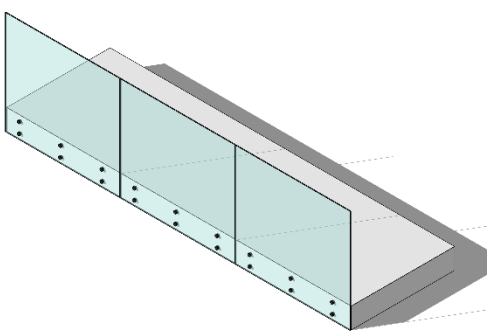

(a) Structural standoff

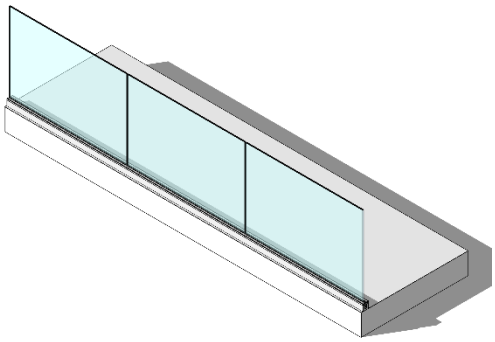

(b) Channel

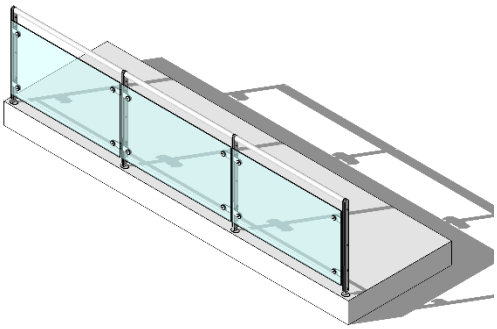

(e) Spider

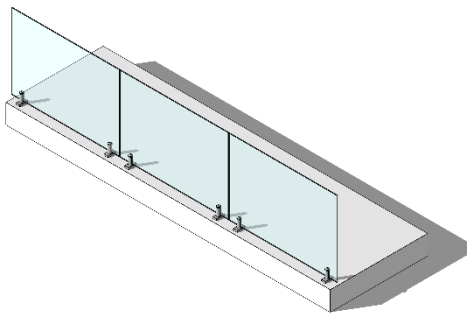

(d) Spigot

Figure C2-46 Balcony balustrade glass fixing methods

C2-7. References

[1] I. Rickard, M. Spearpoint, and S. Lay, ‘The performance of laminated glazing subjected to constant heat fluxes related to building fires’, *Fire and Materials*, vol. 45, no. 2, pp. 283–295, 2020, doi: 10.1002/fam.2939.

[2] G. Agarwal, ‘Evaluation of the fire performance of aluminium composite material (ACM) assemblies using ANSI/FM 4880’, Norwood, MA, FM Research Technical Report, Dec. 2017.

C2-8. Acknowledgement

During the preparation of this report the authors used ChatGPT to make suggestions on language improvements and to assist with the development of the Python code used to analyse the data. After using this tool/service, the authors reviewed and edited the content as needed and take full responsibility for the content.

Appendix I

Summary of the measured total mass loss for all experiments, PVB (blue), SGP (green), EVA (yellow), CIP (purple).

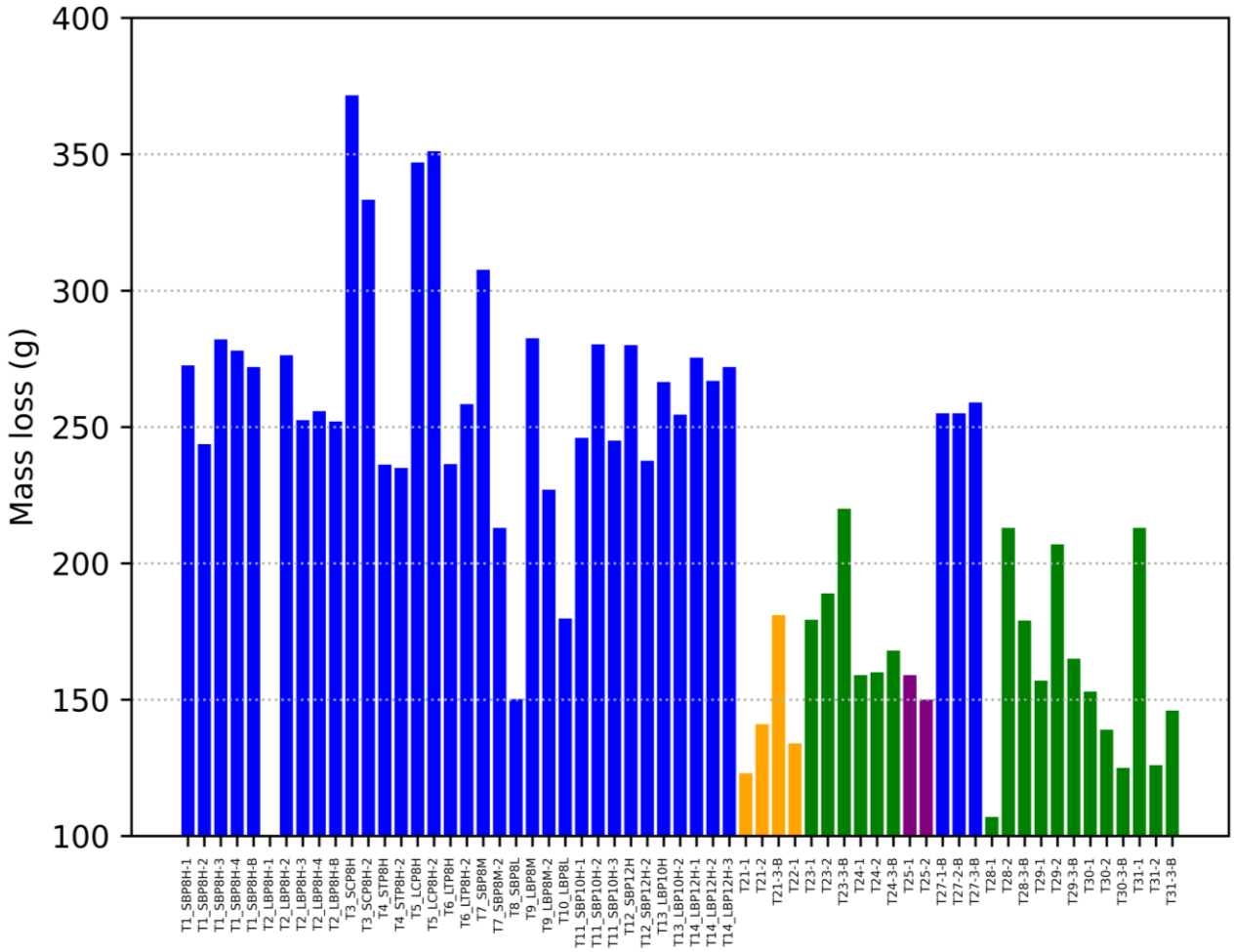

Appendix II

Table C2-8 Summary of laminated glass experiments with reliable mass loss measurements

ID	Inter-layer type	Thickness [mm]	Size	Heating location	Heat flux [kW/m^2]	Ignition time [s]	Mass loss [g]
T1_SBP8H-1	PVB	17.5	3 x small	Bottom	75	322	273
T1_SBP8H-4	PVB	17.5	3 x small	Bottom	75	413	278
T1_SBP8H-B	PVB	17.5	3 x small	Bottom	75	450	272
T2_LBP8H-4	PVB	17.5	Large	Bottom	75	296	256
T2_LBP8H-B	PVB	17.5	Large	Bottom	75	330	252
T3_SCP8H-2	PVB	17.5	3 x small	Central	75	306	333
T4_STP8H-2	PVB	17.5	3 x small	Top	75	381	235
T5_LCP8H-2	PVB	17.5	Large	Central	75	308	351
T6_LTP8H-2	PVB	17.5	Large	Top	75	652	258
T7_SBP8M	PVB	17.5	3 x small	Bottom	50	627	308
T7_SBP8M-2	PVB	17.5	3 x small	Bottom	50	-	213
T8_SBP8L	PVB	17.5	3 x small	Bottom	25	-	150
T9_LBP8M-2	PVB	17.5	Large	Bottom	50	627	227
T11_SBP10H-3	PVB	21.5	3 x small	Bottom	75	467	245
T12_SBP12H-2	PVB	25.5	3 x small	Bottom	75	567	238
T13_LBP10H-2	PVB	21.5	Large	Bottom	75	439	255
T14_LBP12H-3	PVB	25.5	Large	Bottom	75	525	272
T21-1	EVA	21.5	3 x small	Bottom	75	570	123
T21-2	EVA	21.5	3 x small	Bottom	75	649	141
T21-3-B	EVA	21.5	3 x small	Central	75	622	181
T22-1	EVA	21.5	Large	Bottom	75	734	134
T23-1	SGP	17.5	3 x small	Bottom	75	444	180
T23-2	SGP	17.5	3 x small	Bottom	75	380	189
T23-3-B	SGP	17.5	3 x small	Bottom	75	535	220
T24-1	SGP	17.5	Large	Bottom	75	742	159
T24-2	SGP	17.5	Large	Bottom	75	489	160
T24-3-B	SGP	17.5	Large	Bottom	75	495	168
T25-1	CIP	21.5	3 x small	Bottom	75	-	159
T25-2	CIP	21.5	3 x small	Bottom	75	531	150
T27-1-B	PVB	17.5	3 x small	Bottom	75	283	255
T27-2-B	PVB	17.5	3 x small	Bottom	75	463	255
T27-3-B	PVB	17.5	3 x small	Bottom	75	394	259
T28-1	SGP	21.5	3 x small	Bottom	75	2101	107
T28-2	SGP	21.5	3 x small	Bottom	75	487	213
T28-3-B	SGP	21.5	3 x small	Bottom	75	568	179
T29-1	SGP	21.5	Large	Bottom	75	594	157
T29-2	SGP	21.5	Large	Bottom	75	511	207
T29-3-B	SGP	21.5	Large	Bottom	75	849	165

ID	Inter-layer type	Thickness [mm]	Size	Heating location	Heat flux [kW/m^2]	Ignition time [s]	Mass loss [g]
T30-1	SGP	25.5	3 x small	Bottom	75	-	153
T30-2	SGP	25.5	3 x small	Bottom	75	1259	139
T30-3-B	SGP	25.5	3 x small	Bottom	75	1667	125
T31-1	SGP	25.5	Large	Bottom	75	623	213
T31-3-B	SGP	25.5	Large	Bottom	75	1059	146
T31-2	SGP	25.5	Large	Bottom	75	-	126

T1_SBP8H-1

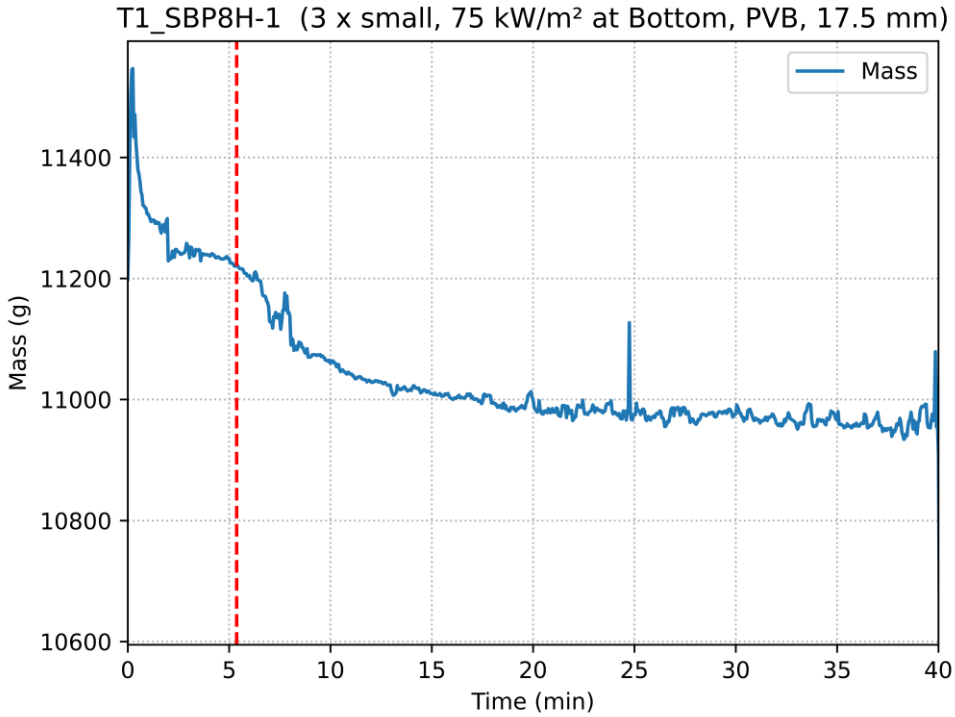
T1_SBP8H-1 (3 x small, 75 kW/m² at Bottom, PVB, 17.5 mm)
Mass
Mass (g)
11400
11200
11000
10800
10600
0
5
10
15
20
25
30
35
40
Time (min)

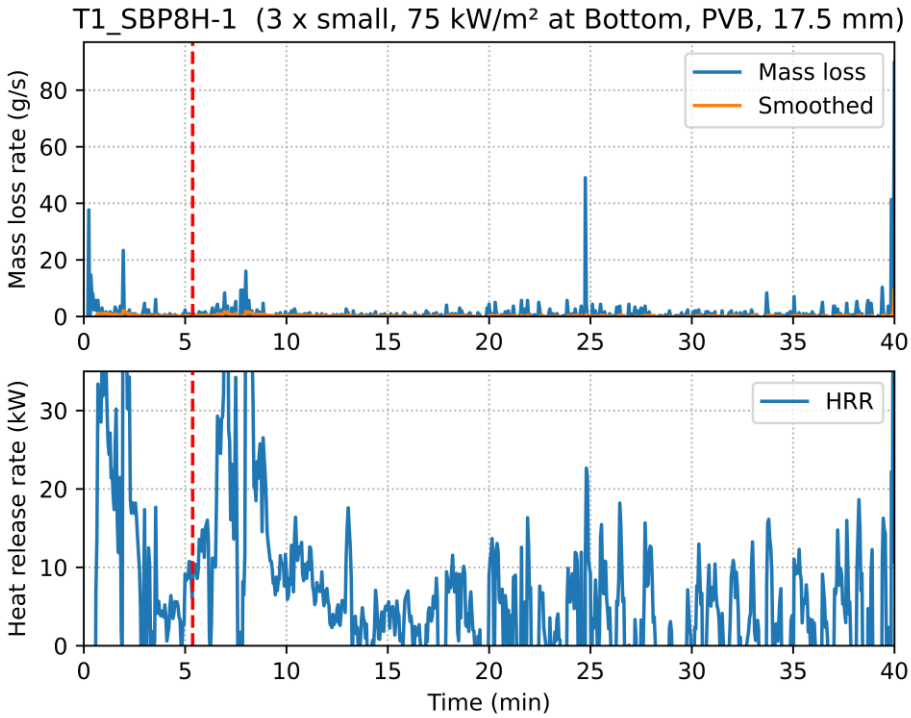
T1_SBP8H-1 (3 x small, 75 kW/m² at Bottom, PVB, 17.5 mm)
Mass loss
Smoothed
Mass loss rate (g/s)
80
60
40
20
0
HRR
Heat release rate (kW)
30
20
10
0
0
5
10
15
20
25
30
35
40
Time (min)

T1_SBP8H-4

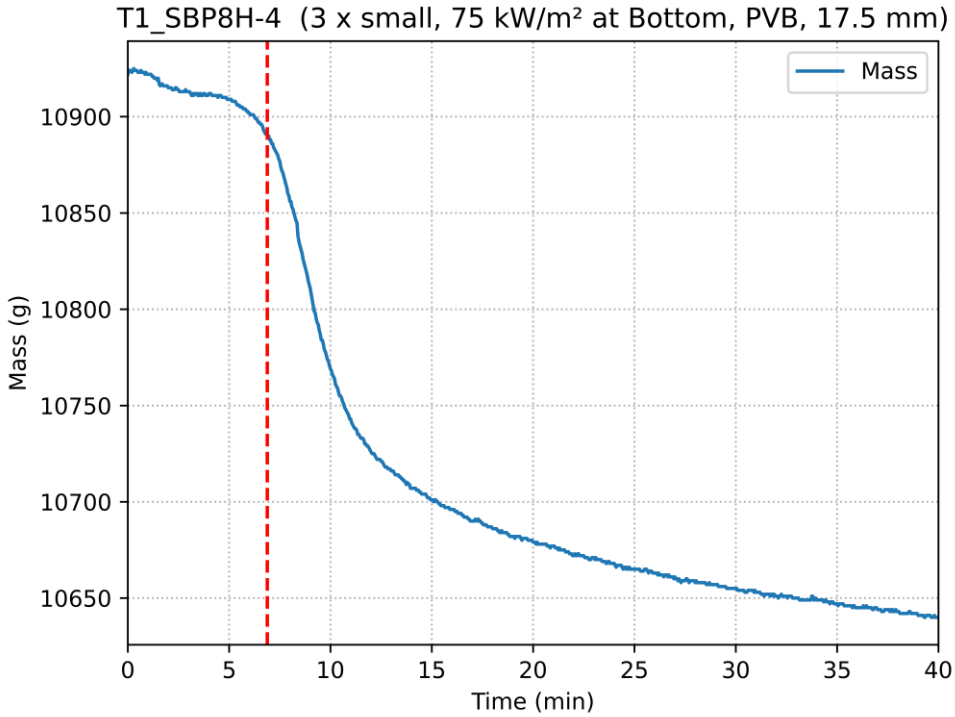
T1_SBP8H-4 (3 x small, 75 kW/m² at Bottom, PVB, 17.5 mm)
Mass
Mass (g)
10900
10850
10800
10750
10700
10650
0
5
10
15
20
25
30
35
40
Time (min)

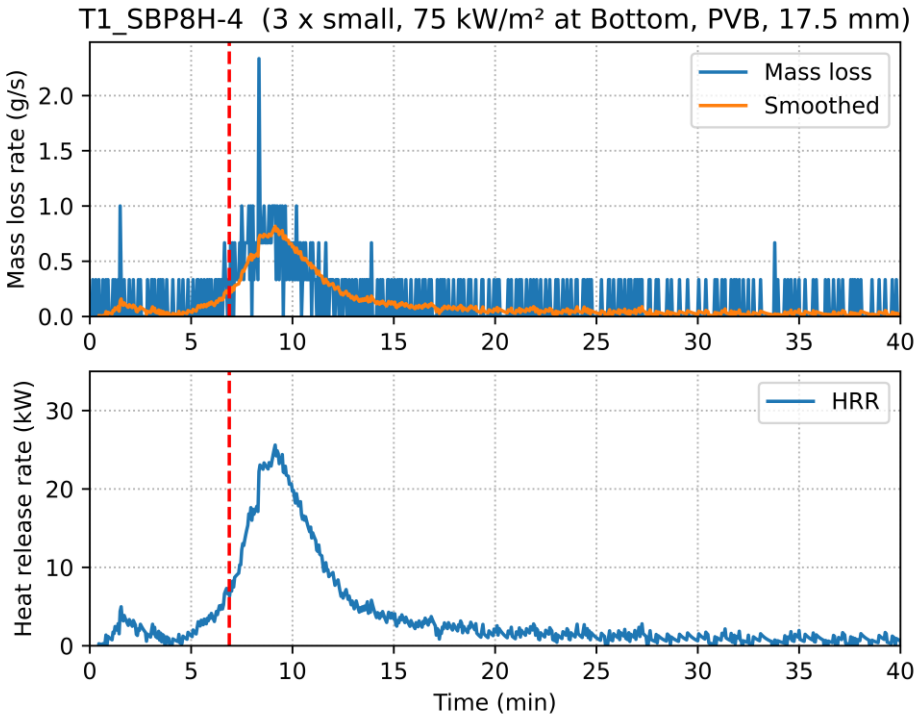
T1_SBP8H-4 (3 x small, 75 kW/m² at Bottom, PVB, 17.5 mm)
Mass loss
Smoothed
Mass loss rate (g/s)
2.0
1.5
1.0
0.5
0.0
HRR
Heat release rate (kW)
30
20
10
0
0
5
10
15
20
25
30
35
40
Time (min)

T1_SBP8H-B

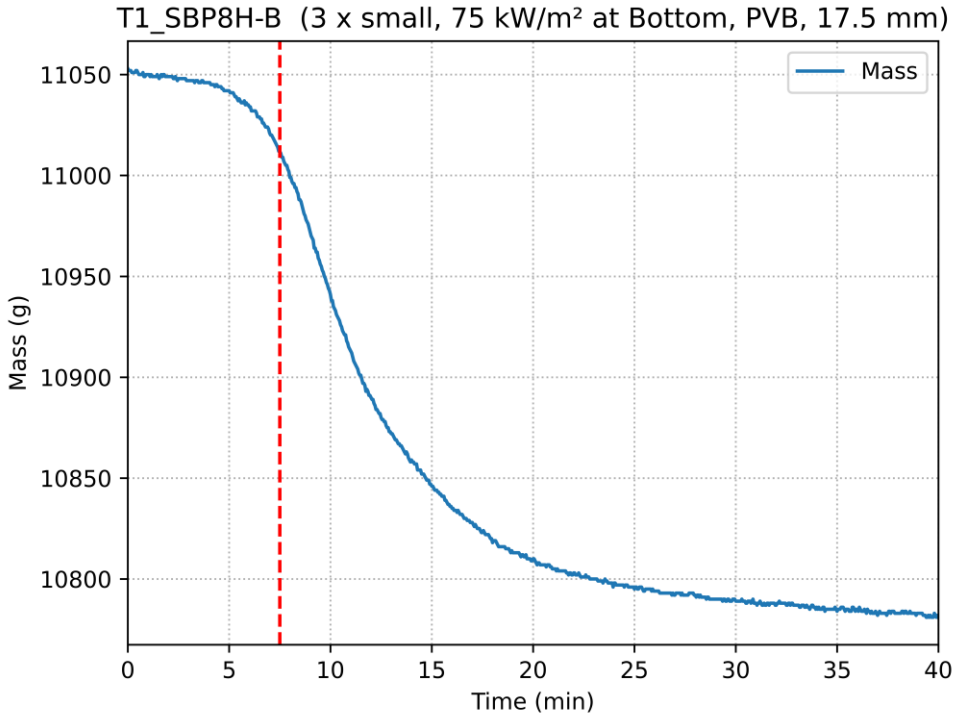
T1_SBP8H-B (3 x small, 75 kW/m² at Bottom, PVB, 17.5 mm)
Mass
Mass (g)
11050
11000
10950
10900
10850
10800
0
5
10
15
20
25
30
35
40
Time (min)

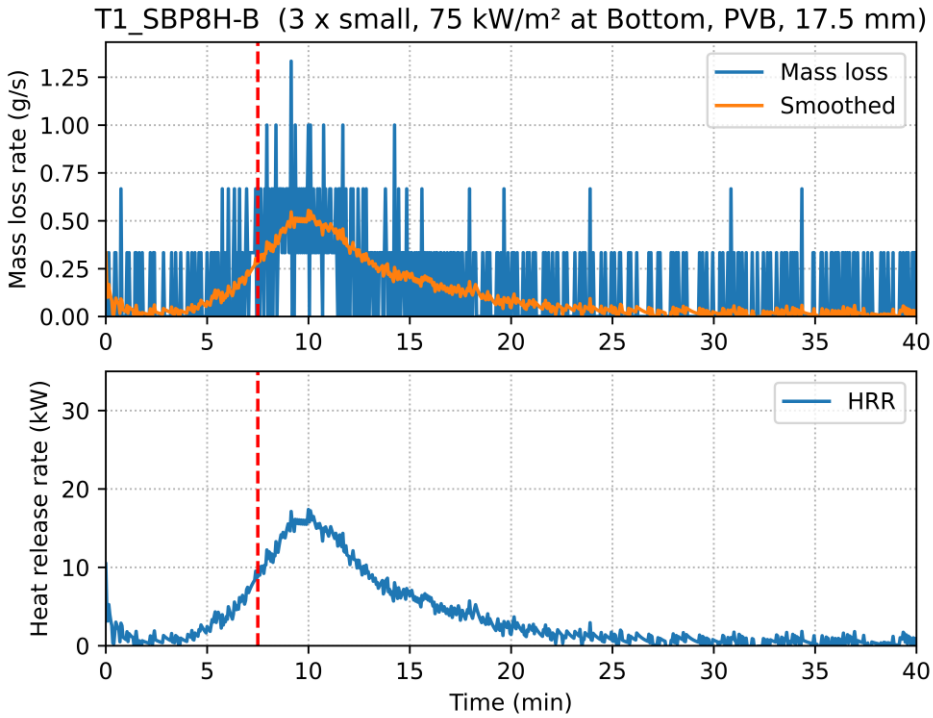
T1_SBP8H-B (3 x small, 75 kW/m² at Bottom, PVB, 17.5 mm)
Mass loss
Smoothed
Mass loss rate (g/s)
1.25
1.00
0.75
0.50
0.25
0.00
HRR
Heat release rate (kW)
30
20
10
0
0
5
10
15
20
25
30
35
40
Time (min)

T2_LBP8H-4

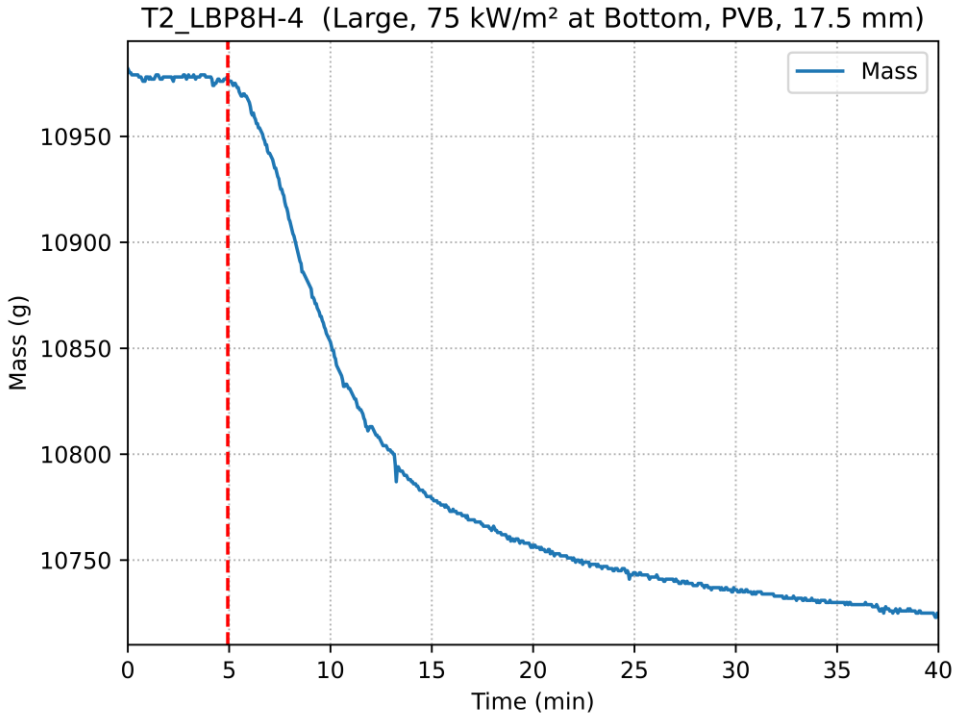
T2_LBP8H-4 (Large, 75 kW/m² at Bottom, PVB, 17.5 mm)
Mass
Mass (g)
10950
10900
10850
10800
10750
0
5
10
15
20
25
30
35
40
Time (min)

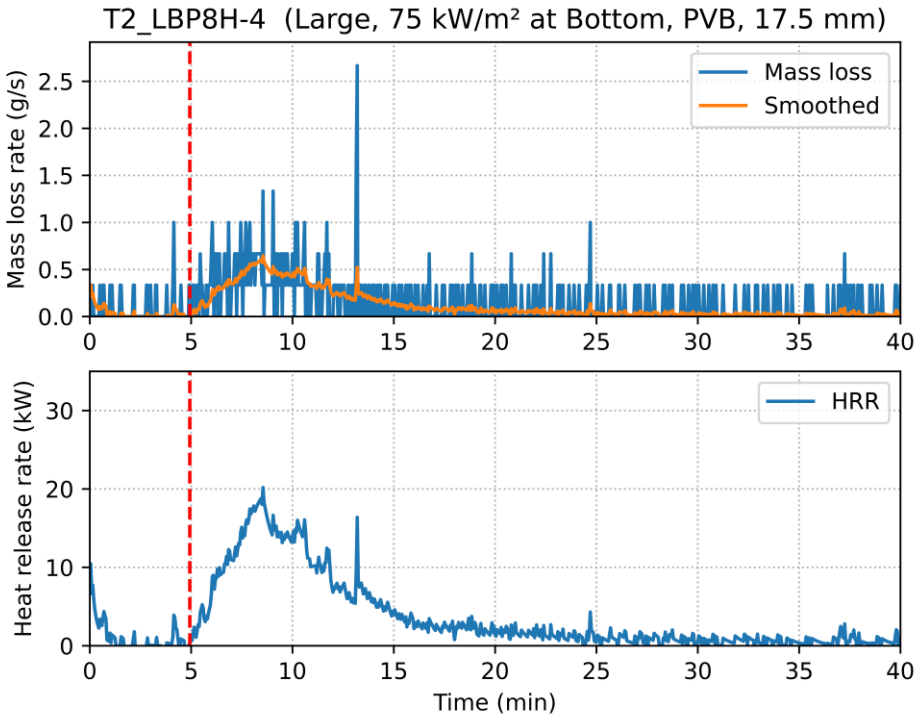
T2_LBP8H-4 (Large, 75 kW/m² at Bottom, PVB, 17.5 mm)
Mass loss
Smoothed
Mass loss rate (g/s)
2.5
2.0
1.5
1.0
0.5
0.0
HRR
Heat release rate (kW)
30
20
10
0
0
5
10
15
20
25
30
35
40
Time (min)

T2_LBP8H-B

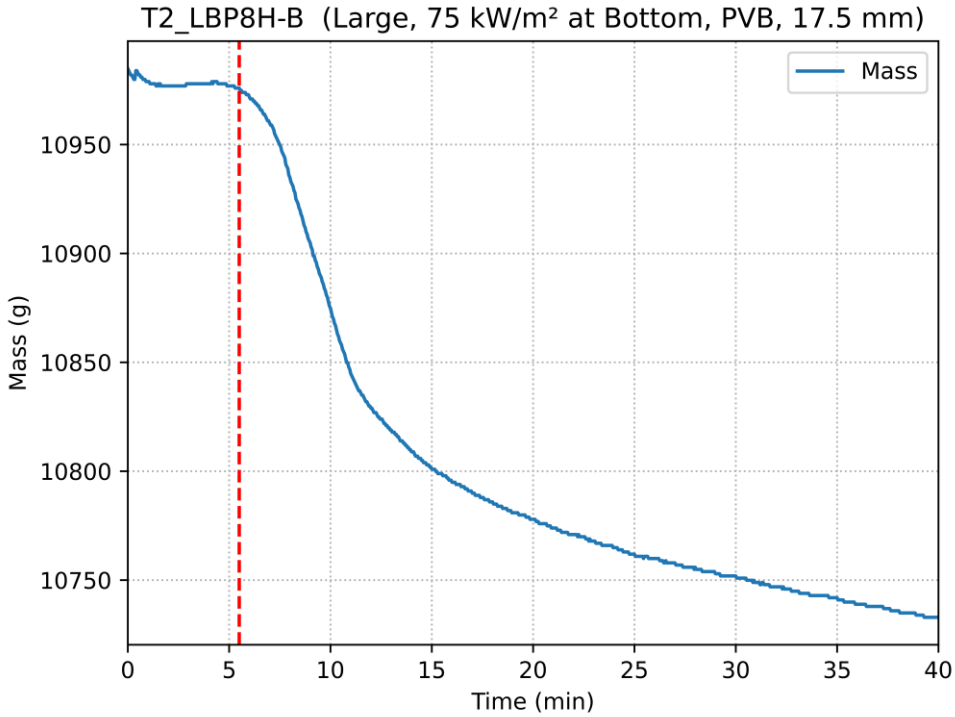
T2_LBP8H-B (Large, 75 kW/m² at Bottom, PVB, 17.5 mm)
Mass
Mass (g)
10950
10900
10850
10800
10750
0
5
10
15
20
25
30
35
40
Time (min)

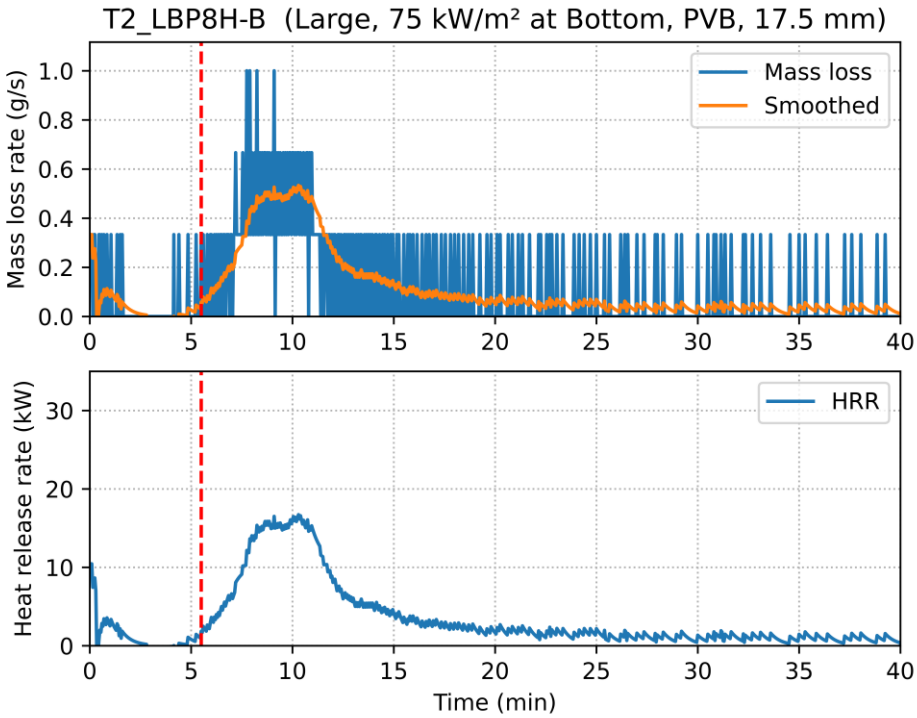
T2_LBP8H-B (Large, 75 kW/m² at Bottom, PVB, 17.5 mm)
Mass loss
Smoothed
Mass loss rate (g/s)
1.0
0.8
0.6
0.4
0.2
0.0
HRR
Heat release rate (kW)
30
20
10
0
0
5
10
15
20
25
30
35
40
Time (min)

T3_SCP8H-2

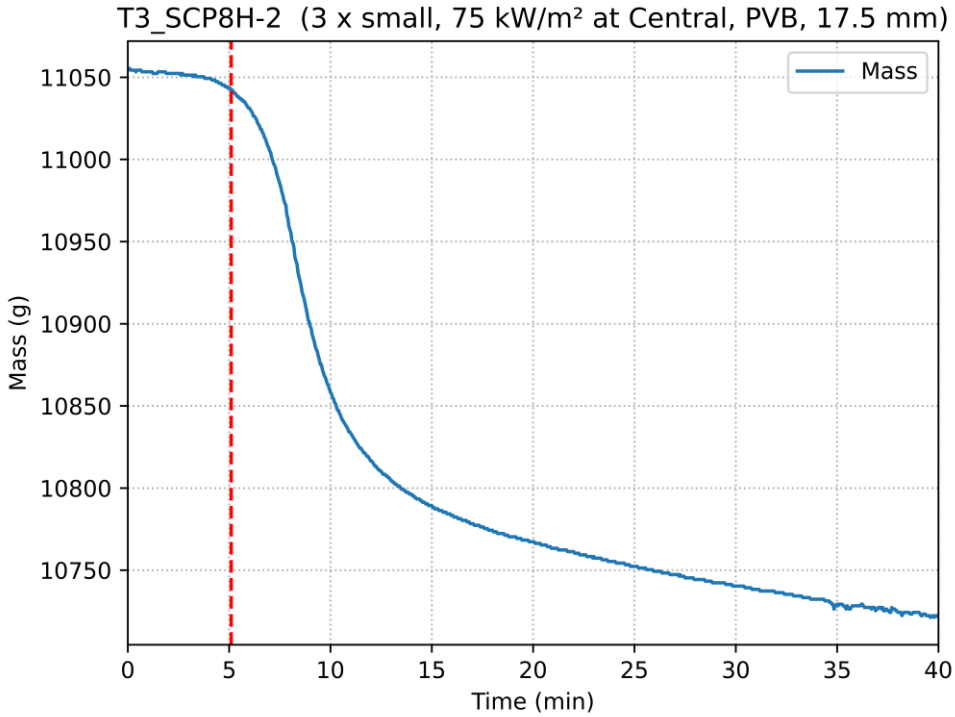
T3_SCP8H-2 (3 x small, 75 kW/m² at Central, PVB, 17.5 mm)
Mass
Mass (g)
11050
11000
10950
10900
10850
10800
10750
0
5
10
15
20
25
30
35
40
Time (min)

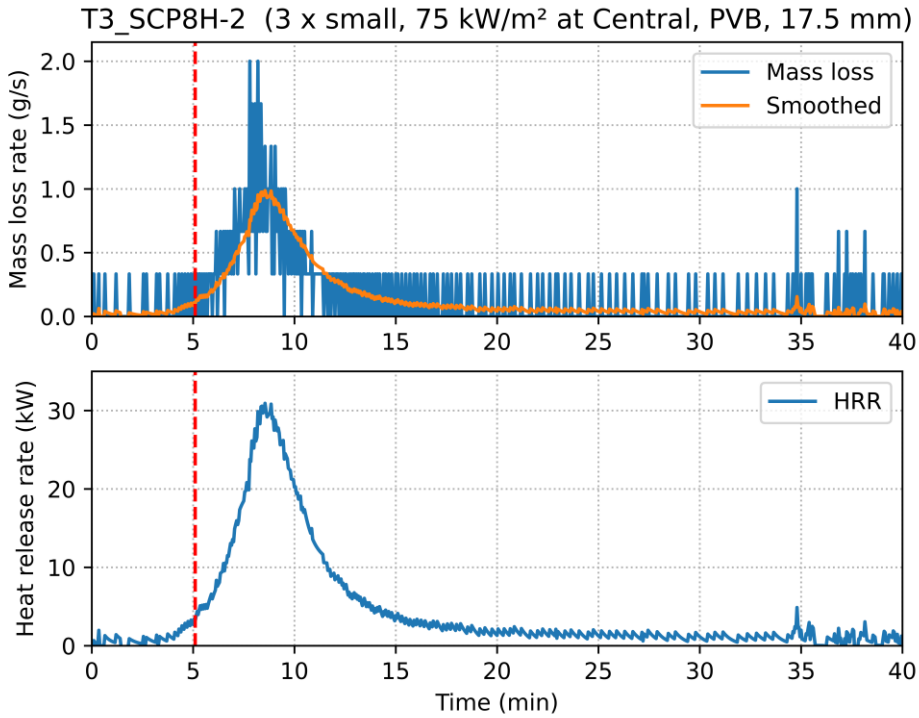
T3_SCP8H-2 (3 x small, 75 kW/m² at Central, PVB, 17.5 mm)
Mass loss
Smoothed
Mass loss rate (g/s)
2.0
1.5
1.0
0.5
0.0
HRR
Heat release rate (kW)
30
20
10
0
0
5
10
15
20
25
30
35
40
Time (min)

T4_STP8H-2

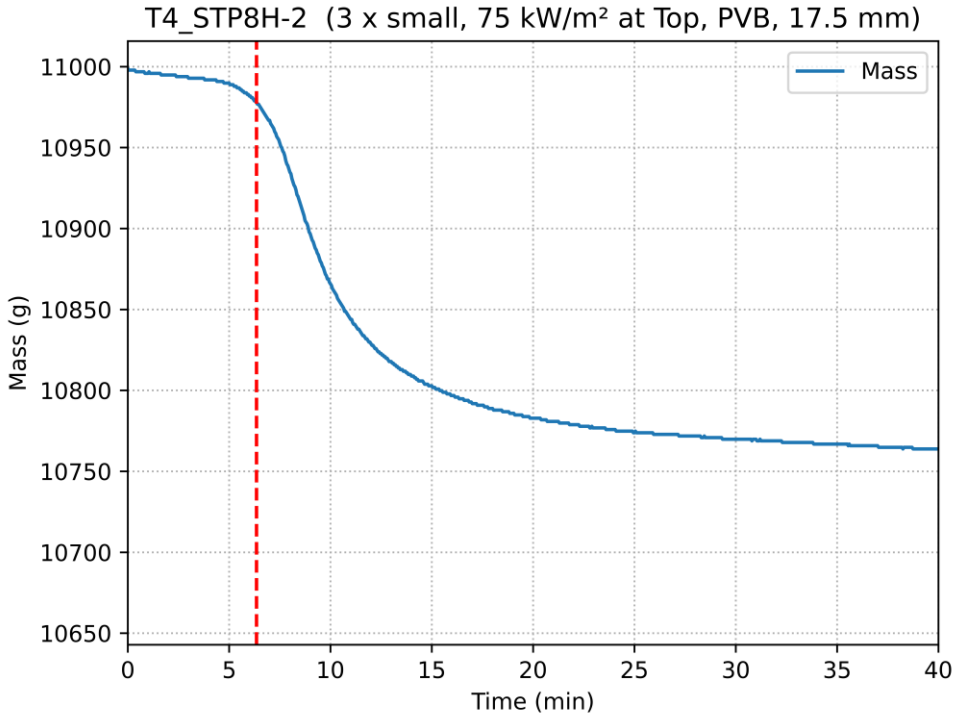
T4_STP8H-2 (3 x small, 75 kW/m² at Top, PVB, 17.5 mm)
Mass
Mass (g)
11000
10950
10900
10850
10800
10750
10700
10650
0
5
10
15
20
25
30
35
40
Time (min)

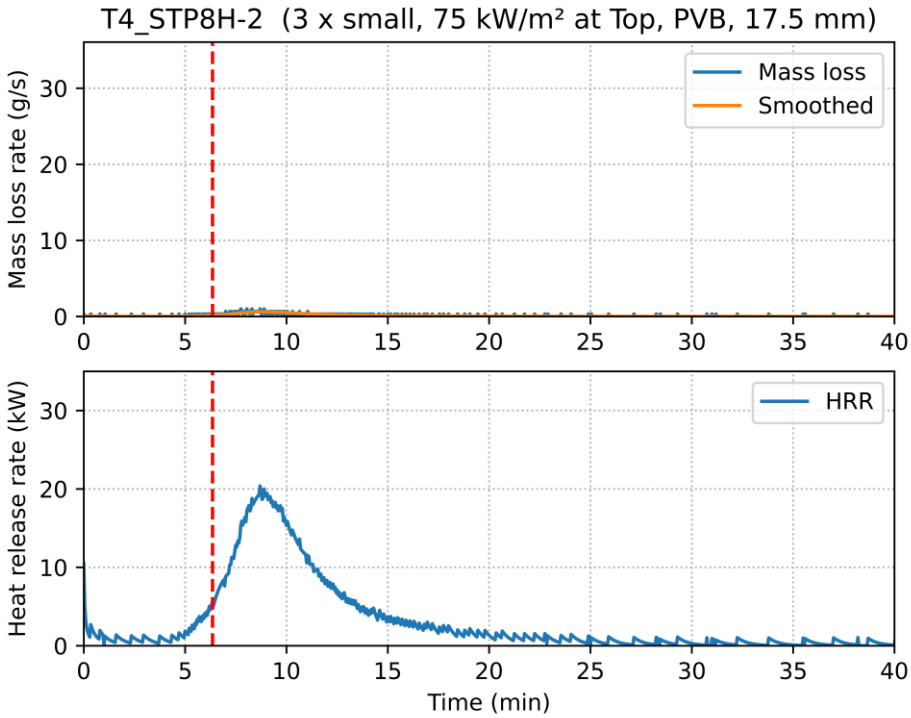
T4_STP8H-2 (3 x small, 75 kW/m² at Top, PVB, 17.5 mm)
Mass loss
Smoothed
Mass loss rate (g/s)
30
20
10
0
HRR
Heat release rate (kW)
30
20
10
0
0
5
10
15
20
25
30
35
40
Time (min)

T5_LCP8H-2

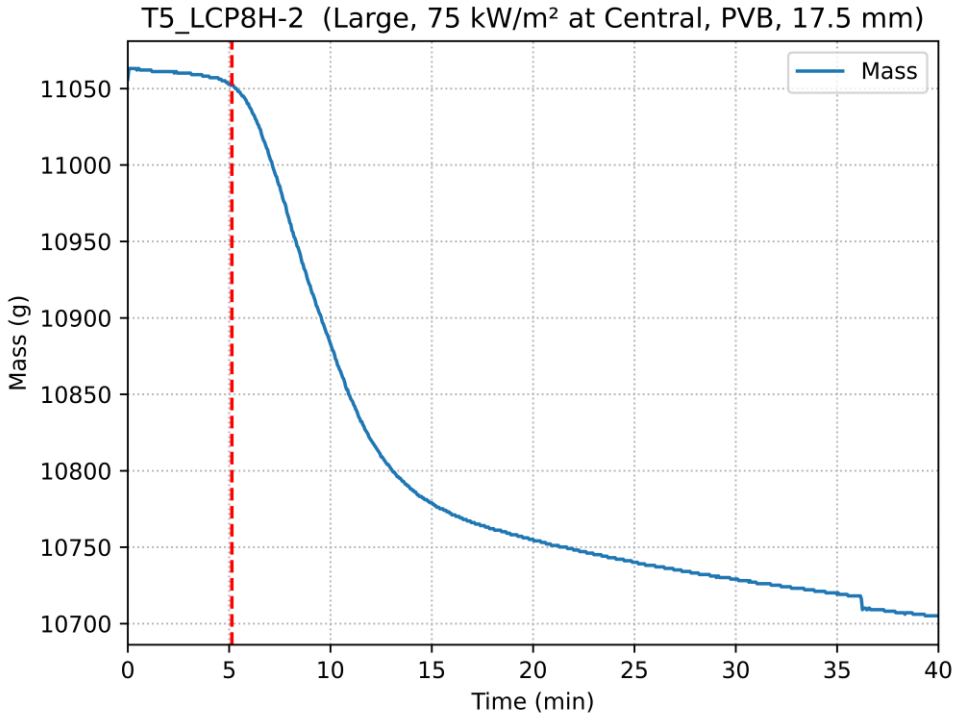
T5_LCP8H-2 (Large, 75 kW/m² at Central, PVB, 17.5 mm)
Mass
Mass (g)
11050
11000
10950
10900
10850
10800
10750
10700
0
5
10
15
20
25
30
35
40
Time (min)

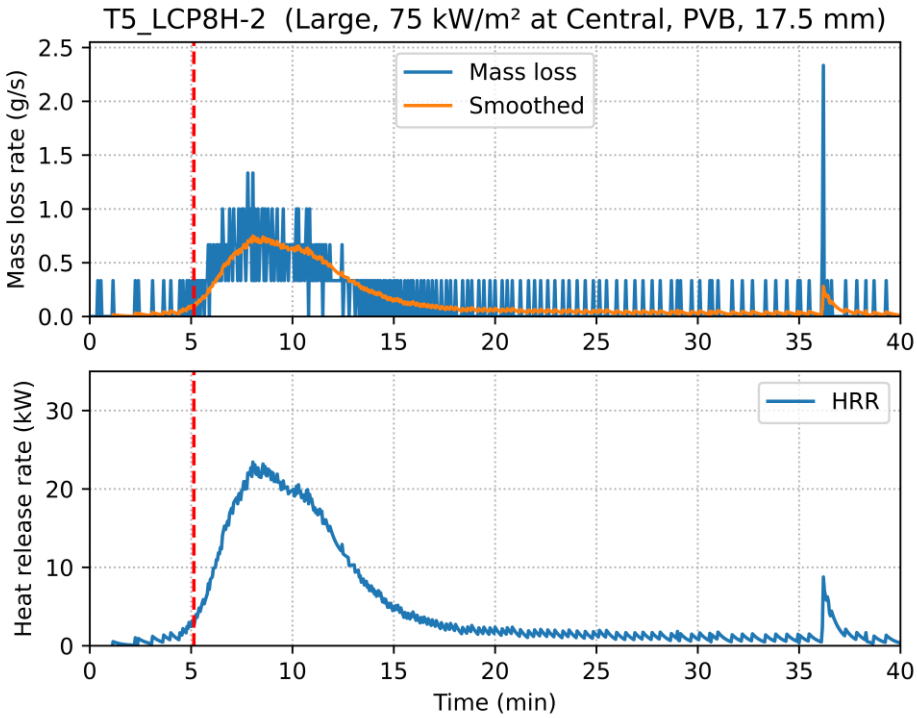
T5_LCP8H-2 (Large, 75 kW/m² at Central, PVB, 17.5 mm)
Mass loss
Smoothed
Mass loss rate (g/s)
2.5
2.0
1.5
1.0
0.5
0.0
HRR
Heat release rate (kW)
30
20
10
0
0
5
10
15
20
25
30
35
40
Time (min)

T6_LTP8H-2

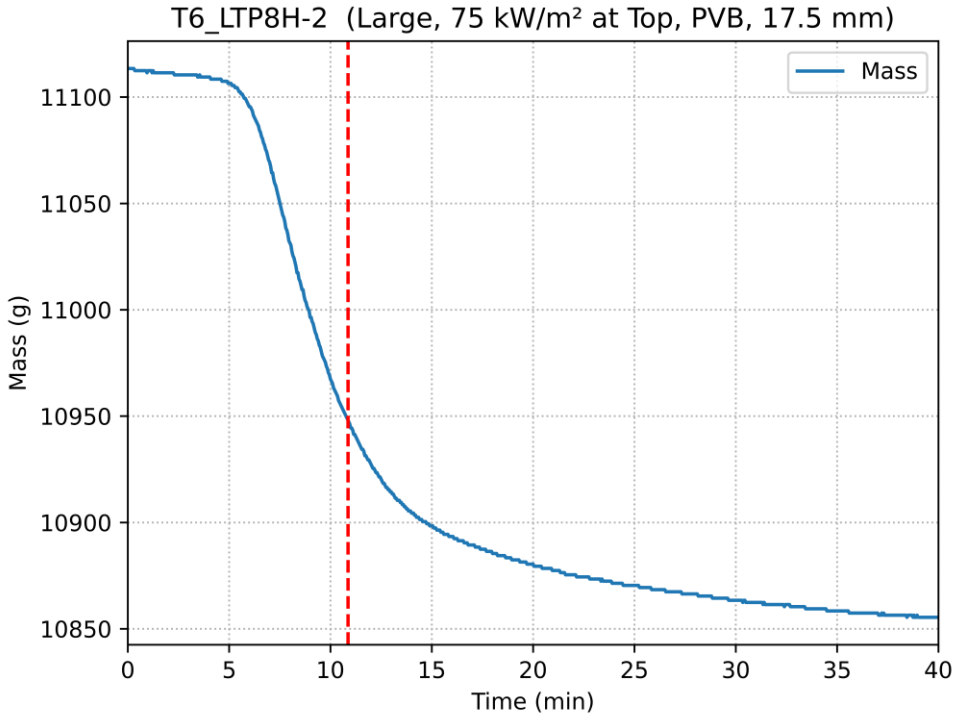
T6_LTP8H-2 (Large, 75 kW/m² at Top, PVB, 17.5 mm)
Mass
Mass (g)
11100
11050
11000
10950
10900
10850
0
5
10
15
20
25
30
35
40
Time (min)

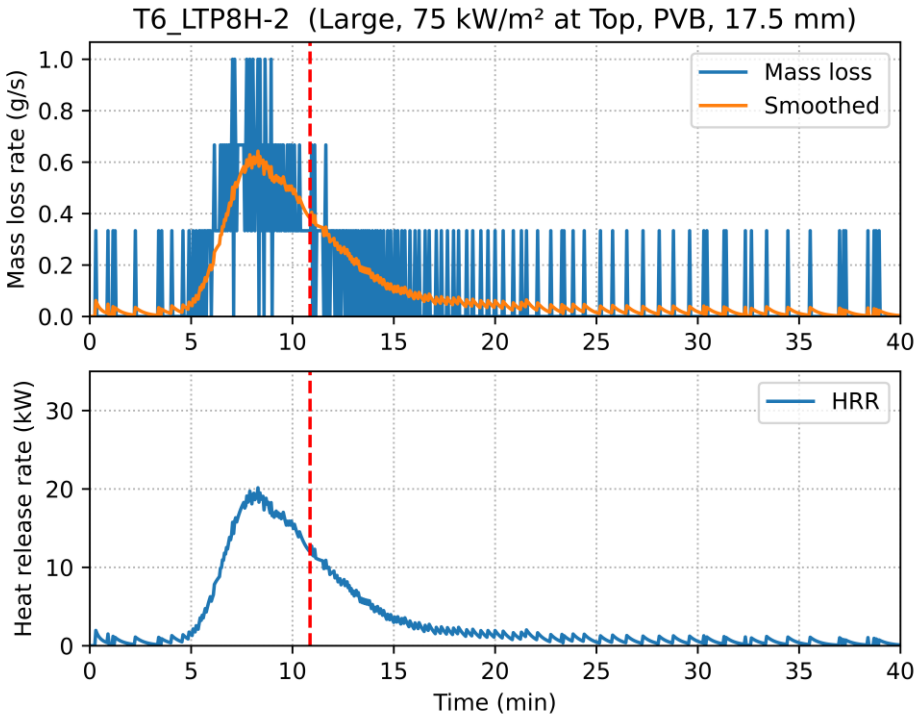
T6_LTP8H-2 (Large, 75 kW/m² at Top, PVB, 17.5 mm)
Mass loss
Smoothed
Mass loss rate (g/s)
1.0
0.8
0.6
0.4
0.2
0.0
HRR
Heat release rate (kW)
30
20
10
0
0
5
10
15
20
25
30
35
40
Time (min)

T7_SBP8M

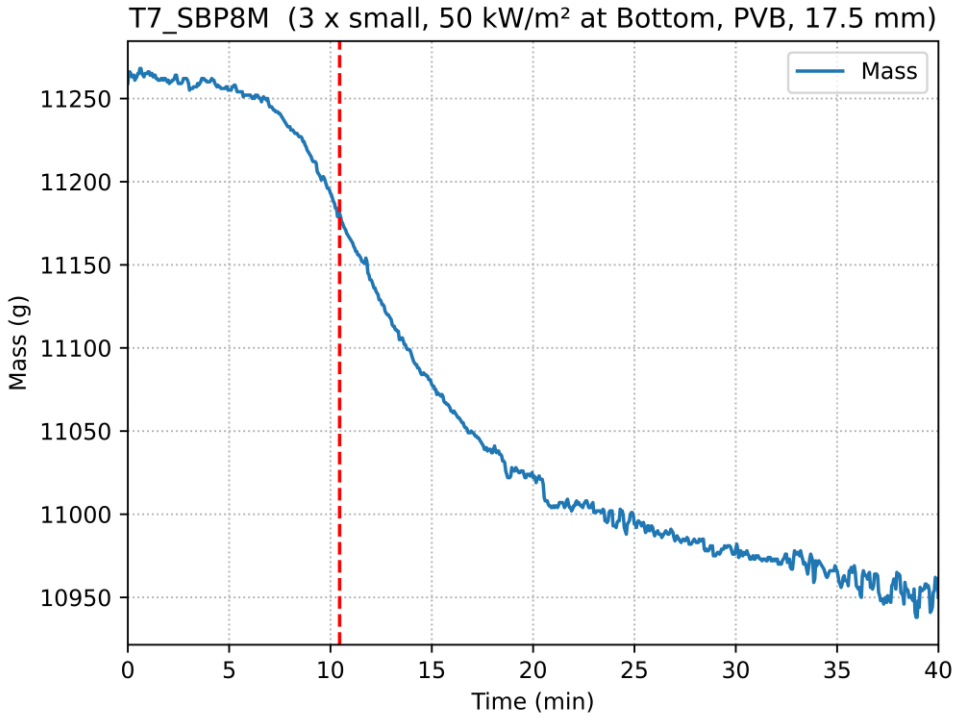
T7_SBP8M (3 x small, 50 kW/m² at Bottom, PVB, 17.5 mm)
Mass
Mass (g)
11250
11200
11150
11100
11050
11000
10950
0
5
10
15
20
25
30
35
40
Time (min)

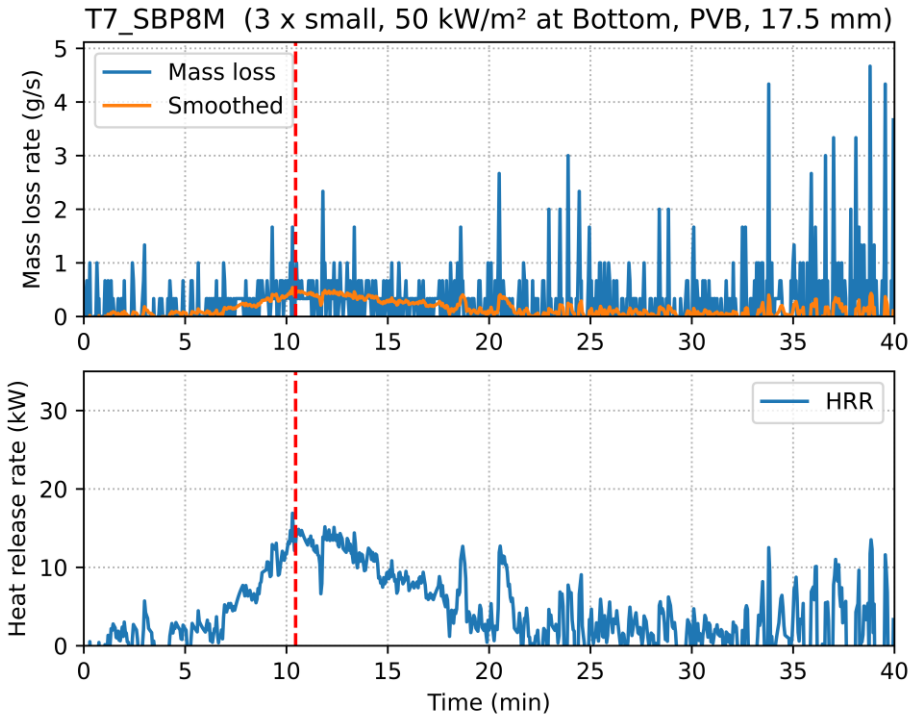
T7_SBP8M (3 x small, 50 kW/m² at Bottom, PVB, 17.5 mm)
Mass loss
Smoothed
Mass loss rate (g/s)
HRR
Heat release rate (kW)
Time (min)

T7_SBP8M-2

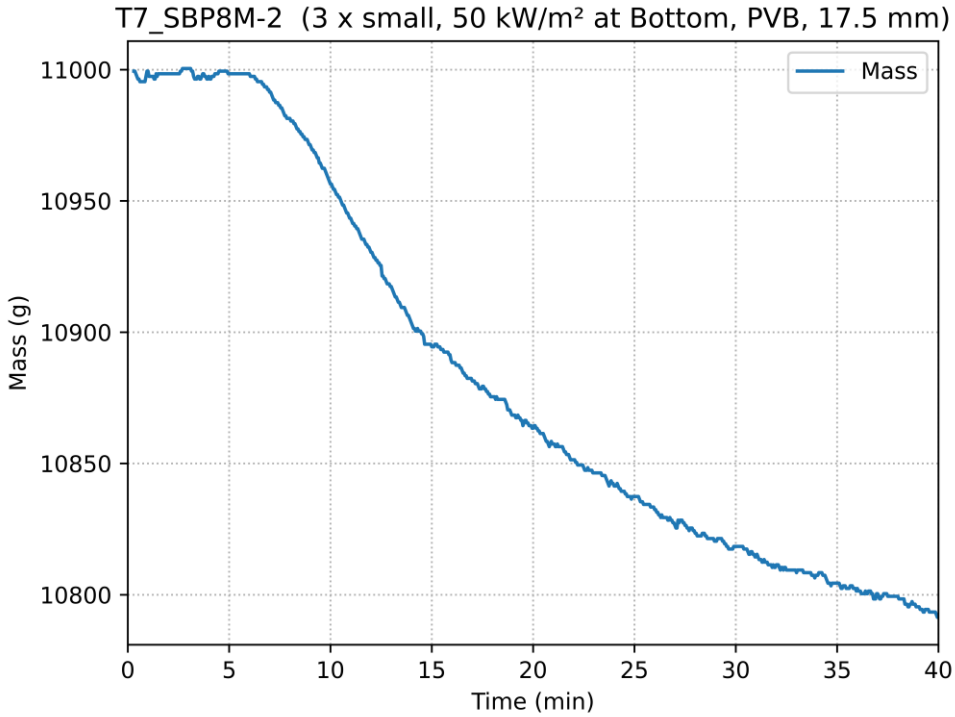
T7_SBP8M-2 (3 x small, 50 kW/m² at Bottom, PVB, 17.5 mm)
Mass
Mass (g)
11000
10950
10900
10850
10800
0
5
10
15
20
25
30
35
40
Time (min)

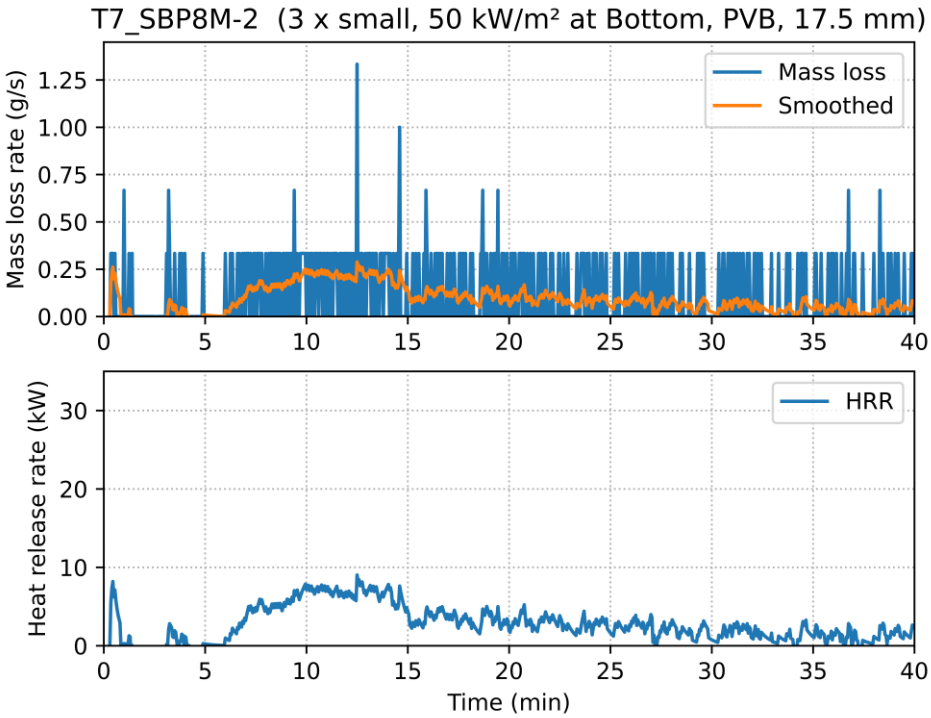
T7_SBP8M-2 (3 x small, 50 kW/m² at Bottom, PVB, 17.5 mm)
Mass loss
Smoothed
Mass loss rate (g/s)
1.25
1.00
0.75
0.50
0.25
0.00
HRR
Heat release rate (kW)
30
20
10
0
0
5
10
15
20
25
30
35
40
Time (min)

T8_SBP8L

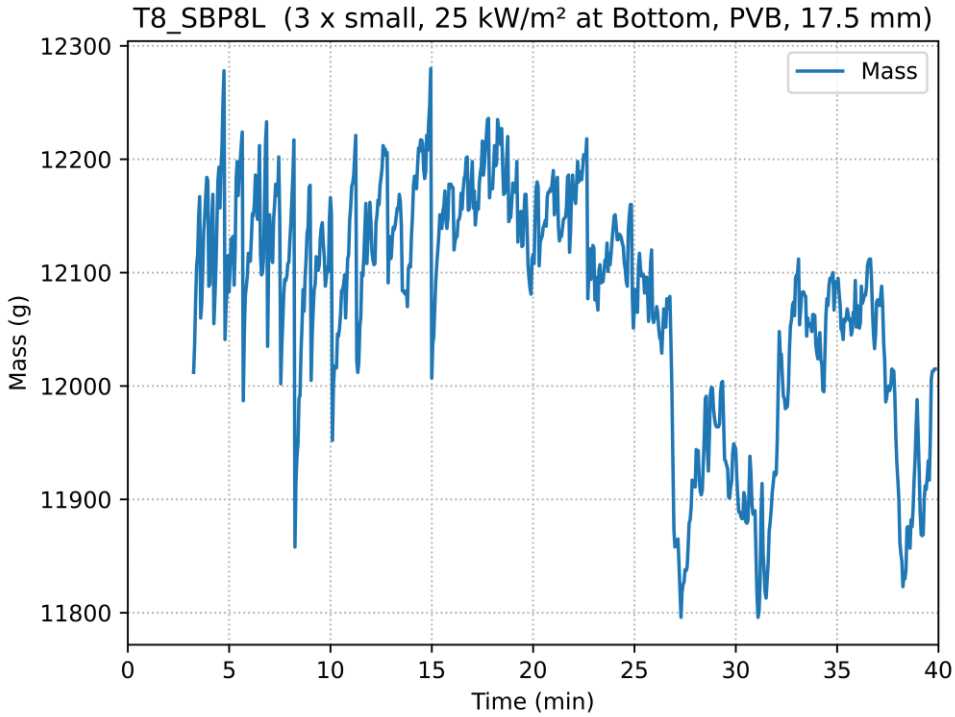
T8_SBP8L (3 x small, 25 kW/m² at Bottom, PVB, 17.5 mm)
Mass
Mass (g)
12300
12200
12100
12000
11900
11800
0
5
10
15
20
25
30
35
40
Time (min)

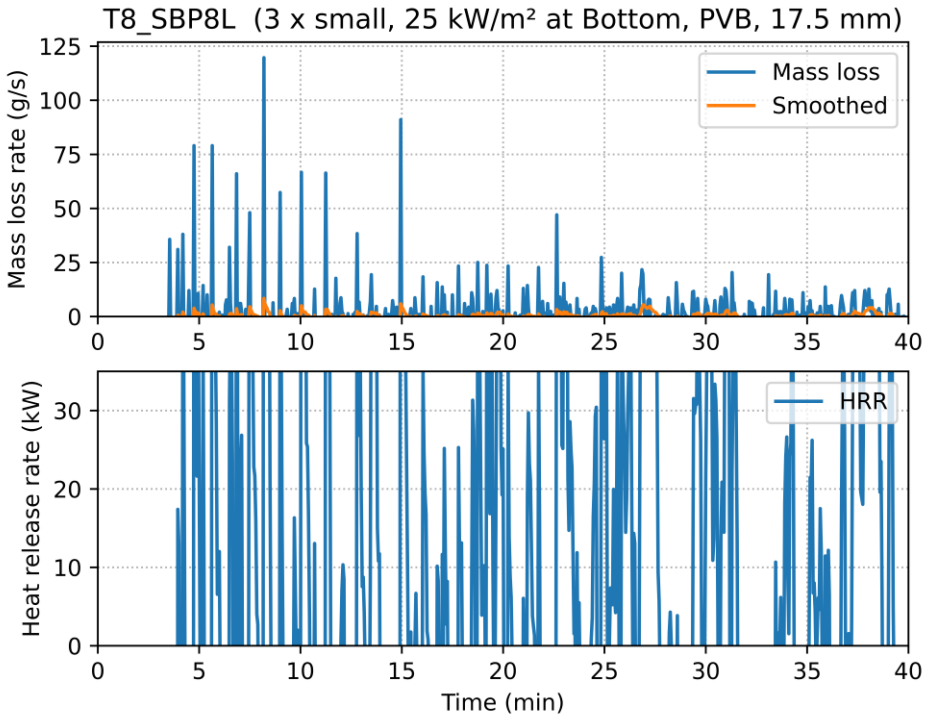
T8_SBP8L (3 x small, 25 kW/m² at Bottom, PVB, 17.5 mm)
Mass loss
Smoothed
Mass loss rate (g/s)
125
100
75
50
25
0
HRR
Heat release rate (kW)
30
20
10
0
0
5
10
15
20
25
30
35
40
Time (min)

T9_LBP8M-2

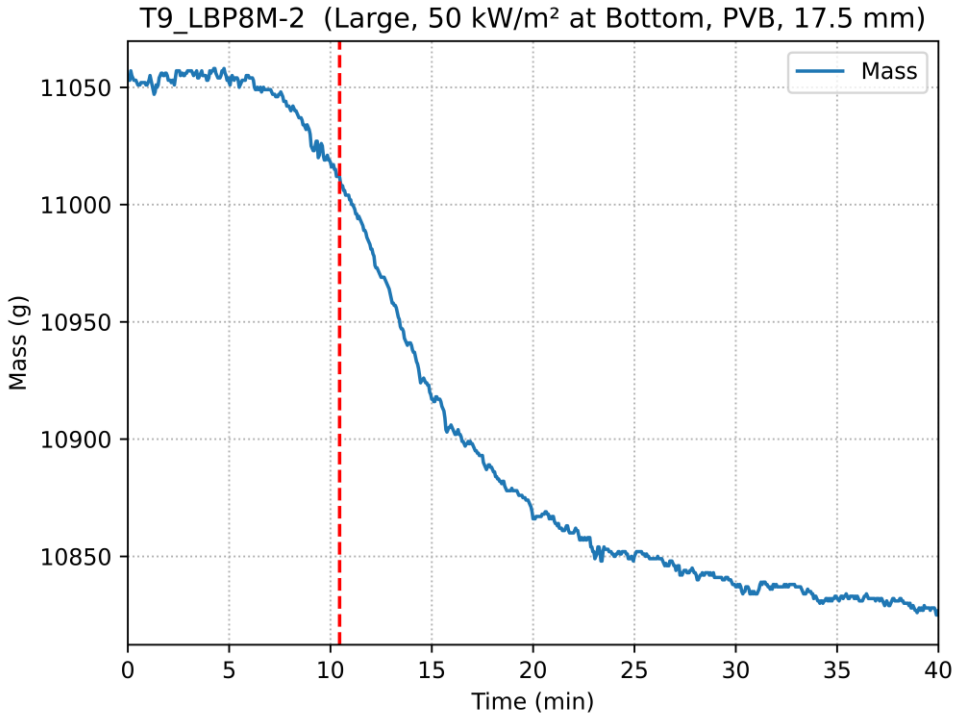
T9_LBP8M-2 (Large, 50 kW/m² at Bottom, PVB, 17.5 mm)
Mass
Mass (g)
11050
11000
10950
10900
10850
0
5
10
15
20
25
30
35
40
Time (min)

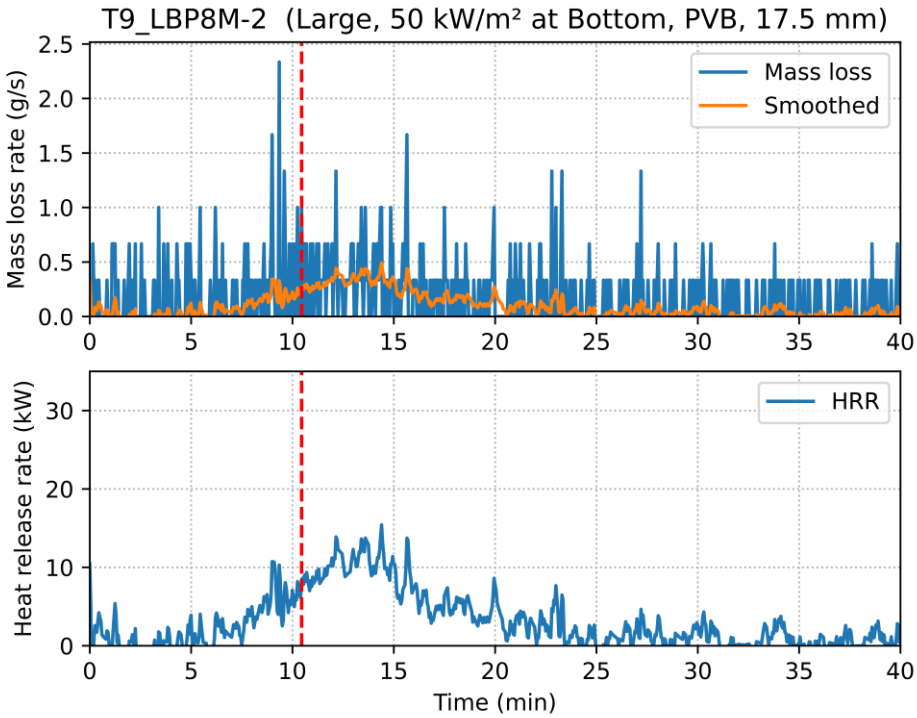
T9_LBP8M-2 (Large, 50 kW/m² at Bottom, PVB, 17.5 mm)
Mass loss
Smoothed
Mass loss rate (g/s)
2.5
2.0
1.5
1.0
0.5
0.0
HRR
Heat release rate (kW)
30
20
10
0
0
5
10
15
20
25
30
35
40
Time (min)

T11_SBP10H-3

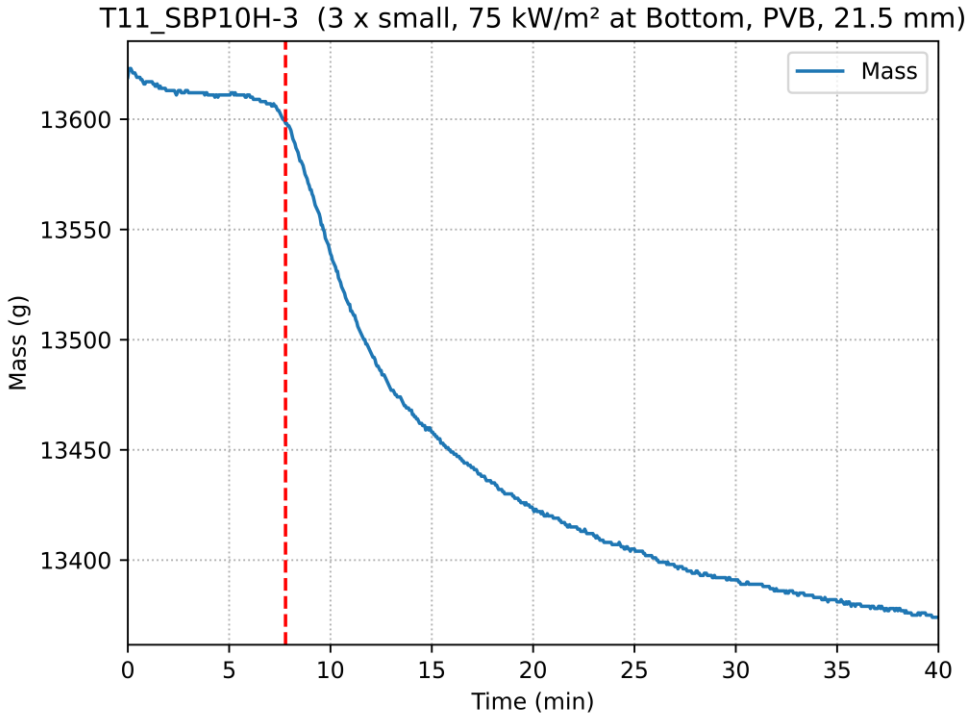
T11_SBP10H-3 (3 x small, 75 kW/m² at Bottom, PVB, 21.5 mm)
Mass
Mass (g)
13600
13550
13500
13450
13400
0
5
10
15
20
25
30
35
40
Time (min)

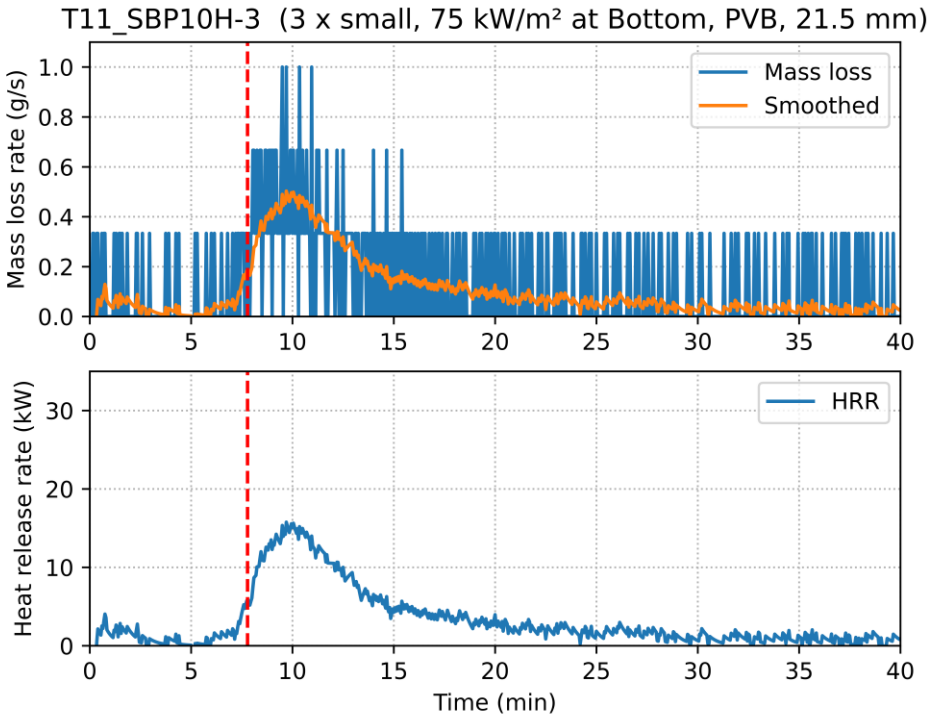
T11_SBP10H-3 (3 x small, 75 kW/m² at Bottom, PVB, 21.5 mm)
Mass loss
Smoothed
Mass loss rate (g/s)
1.0
0.8
0.6
0.4
0.2
0.0
HRR
Heat release rate (kW)
30
20
10
0
0
5
10
15
20
25
30
35
40
Time (min)

T12_SBP12H-2

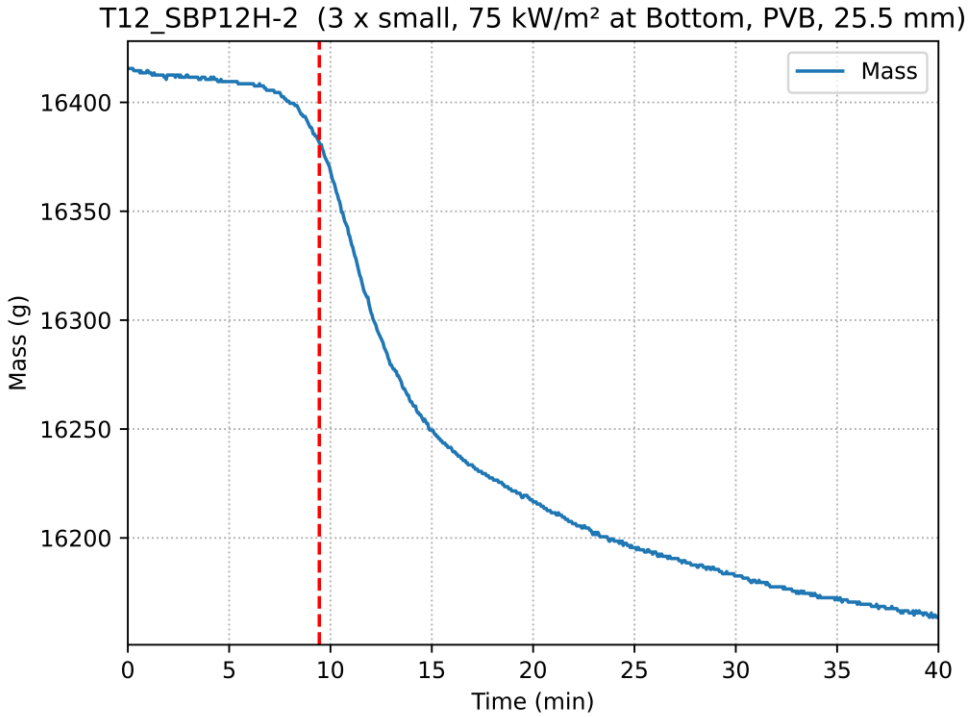
T12_SBP12H-2 (3 x small, 75 kW/m² at Bottom, PVB, 25.5 mm)
Mass
Mass (g)
16400
16350
16300
16250
16200
0
5
10
15
20
25
30
35
40
Time (min)

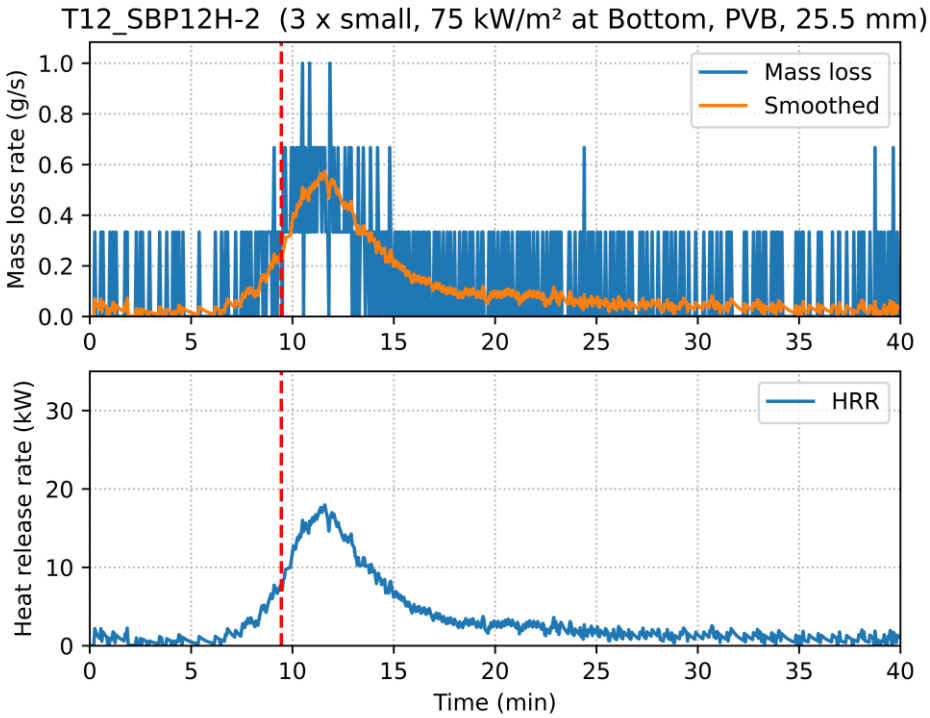
T12_SBP12H-2 (3 x small, 75 kW/m² at Bottom, PVB, 25.5 mm)
Mass loss
Smoothed
Mass loss rate (g/s)
1.0
0.8
0.6
0.4
0.2
0.0
HRR
Heat release rate (kW)
30
20
10
0
0
5
10
15
20
25
30
35
40
Time (min)

T13_LBP10H-2

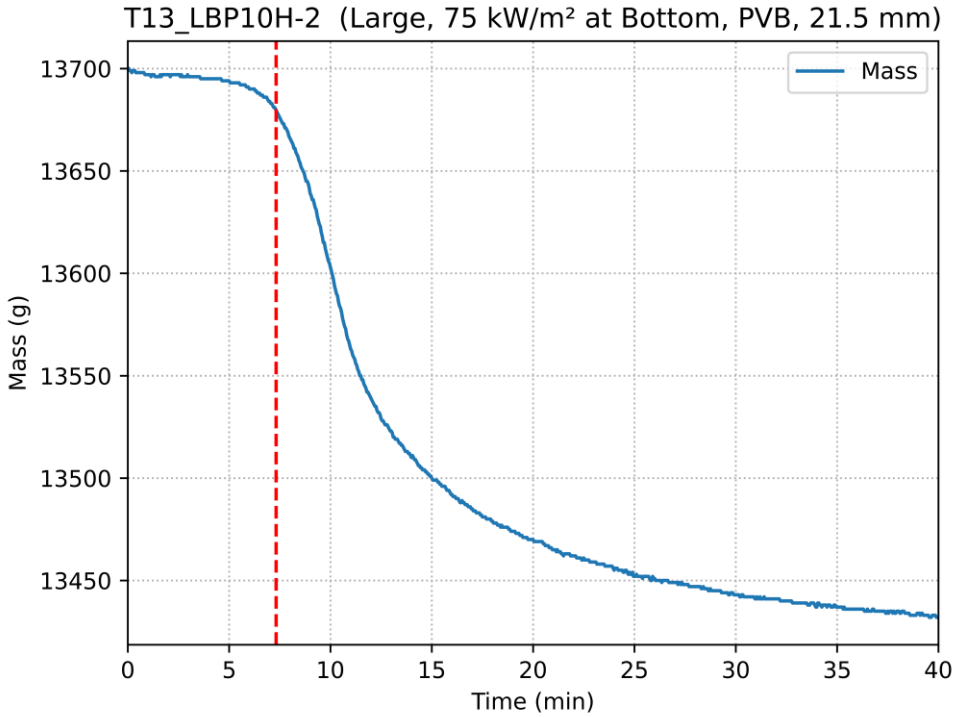
T13_LBP10H-2 (Large, 75 kW/m² at Bottom, PVB, 21.5 mm)
Mass
Mass (g)
13700
13650
13600
13550
13500
13450
0
5
10
15
20
25
30
35
40
Time (min)

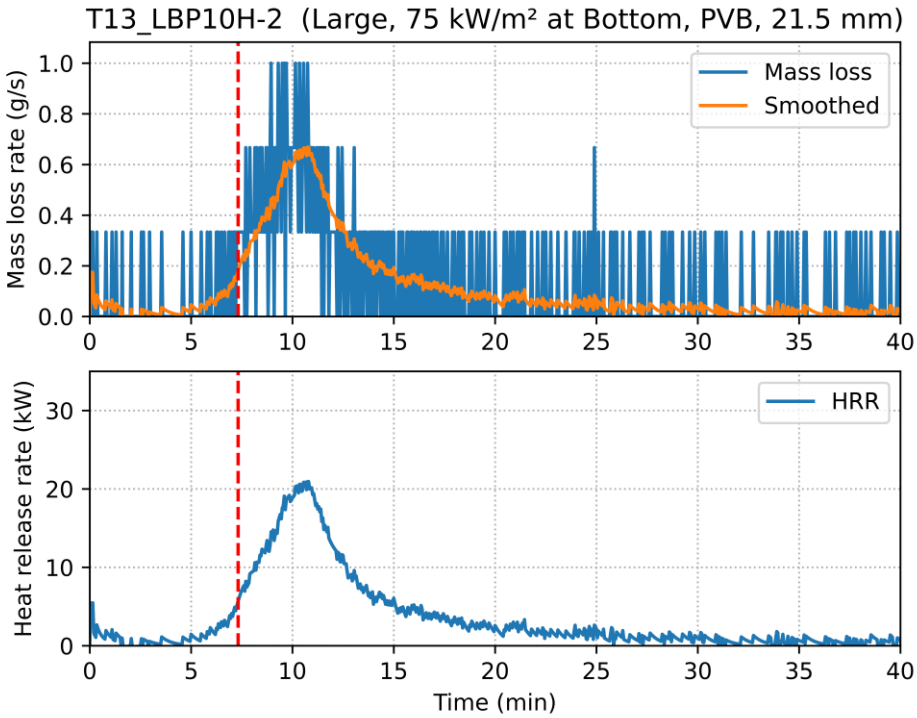
T13_LBP10H-2 (Large, 75 kW/m² at Bottom, PVB, 21.5 mm)
Mass loss
Smoothed
Mass loss rate (g/s)
1.0
0.8
0.6
0.4
0.2
0.0
HRR
Heat release rate (kW)
30
20
10
0
0
5
10
15
20
25
30
35
40
Time (min)

T14_LBP12H-3

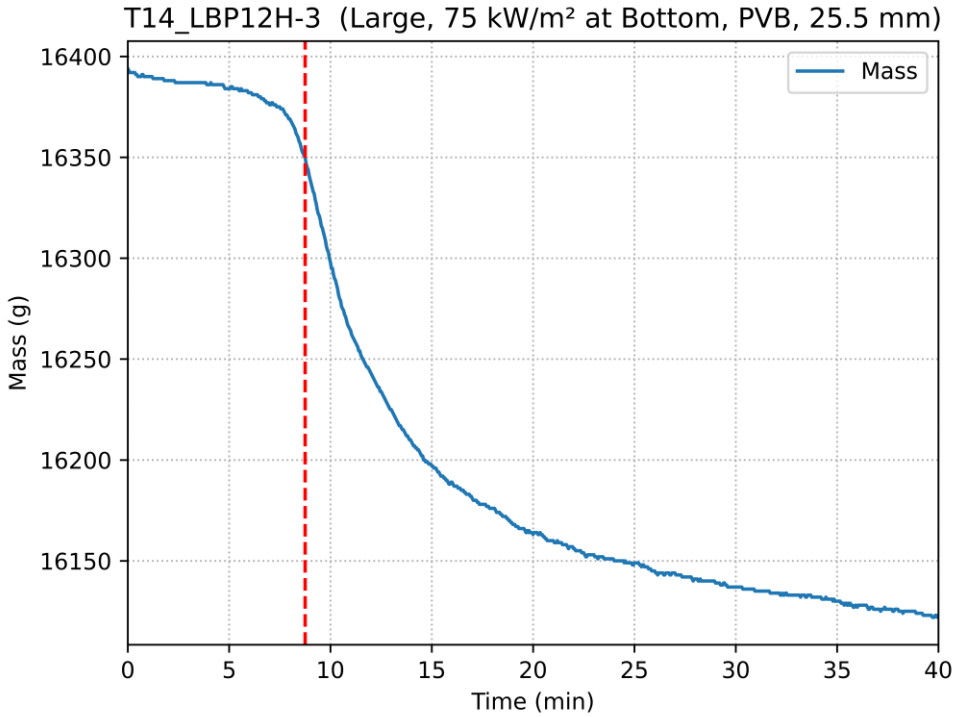
T14_LBP12H-3 (Large, 75 kW/m² at Bottom, PVB, 25.5 mm)
Mass
Mass (g)
16400
16350
16300
16250
16200
16150
0
5
10
15
20
25
30
35
40
Time (min)

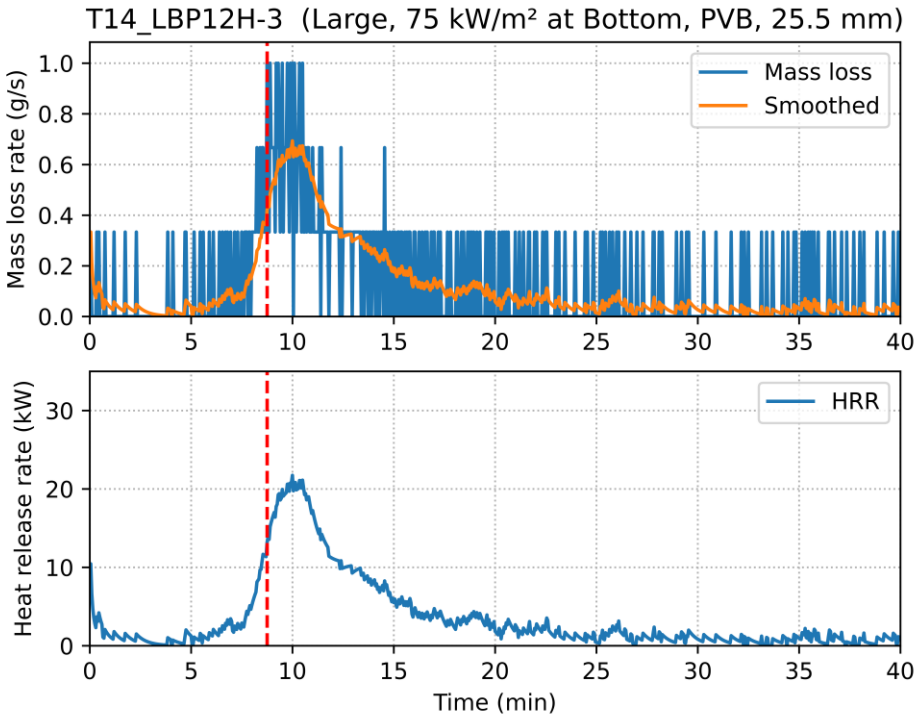
T14_LBP12H-3 (Large, 75 kW/m² at Bottom, PVB, 25.5 mm)
Mass loss
Smoothed
Mass loss rate (g/s)
1.0
0.8
0.6
0.4
0.2
0.0
HRR
Heat release rate (kW)
30
20
10
0
0
5
10
15
20
25
30
35
40
Time (min)

T21-1

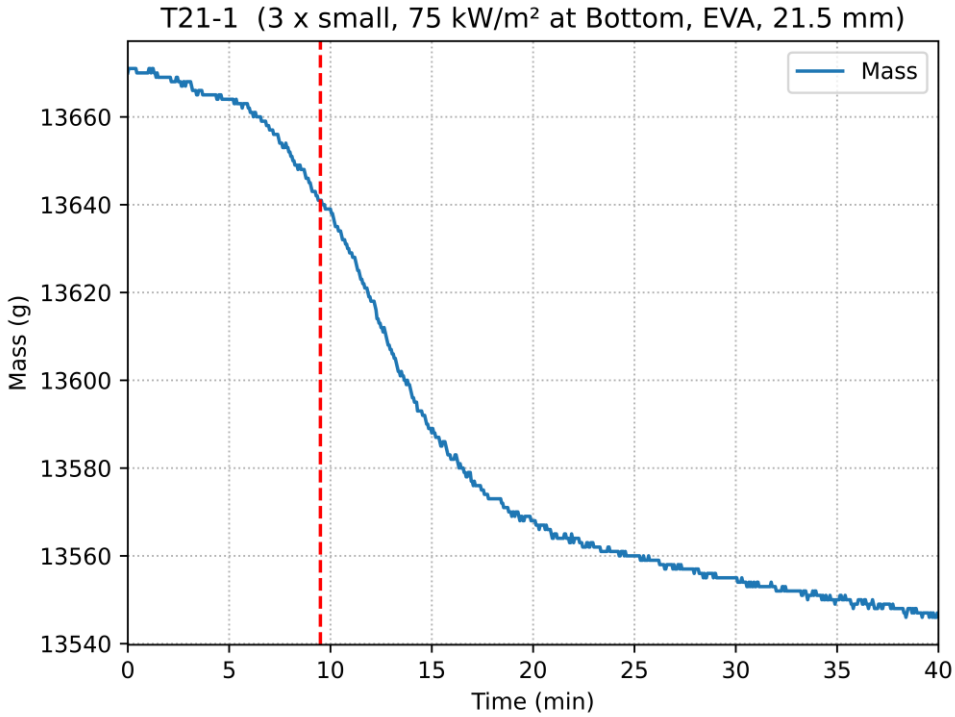
T21-1 (3 x small, 75 kW/m² at Bottom, EVA, 21.5 mm)
Mass
Mass (g)
13660
13640
13620
13600
13580
13560
13540
0
5
10
15
20
25
30
35
40
Time (min)

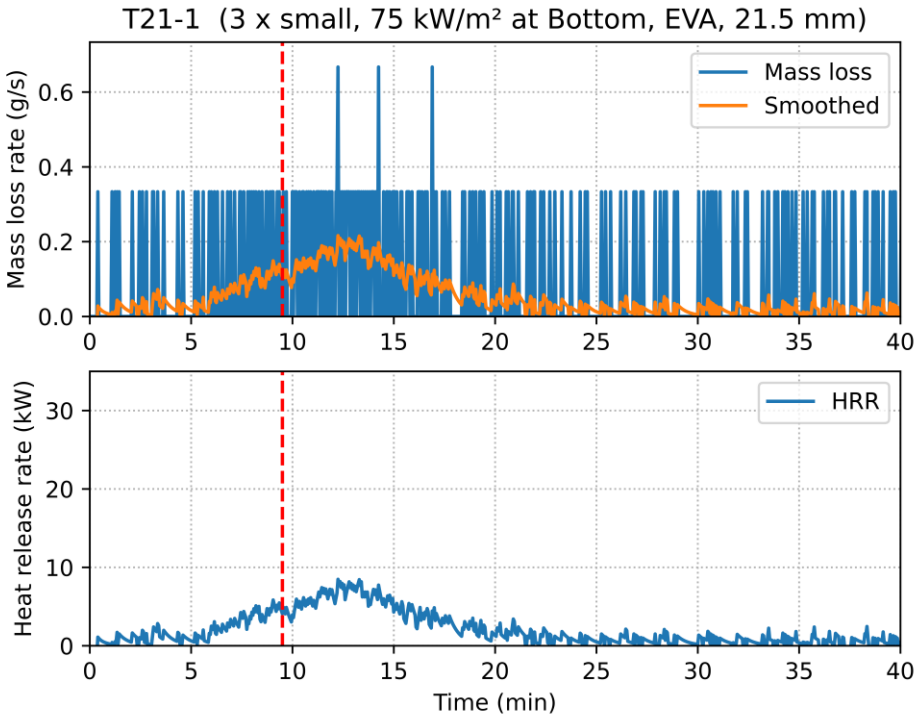
T21-1 (3 x small, 75 kW/m² at Bottom, EVA, 21.5 mm)
Mass loss
Smoothed
Mass loss rate (g/s)
0.6
0.4
0.2
0.0
HRR
Heat release rate (kW)
30
20
10
0
0
5
10
15
20
25
30
35
40
Time (min)

T21-2

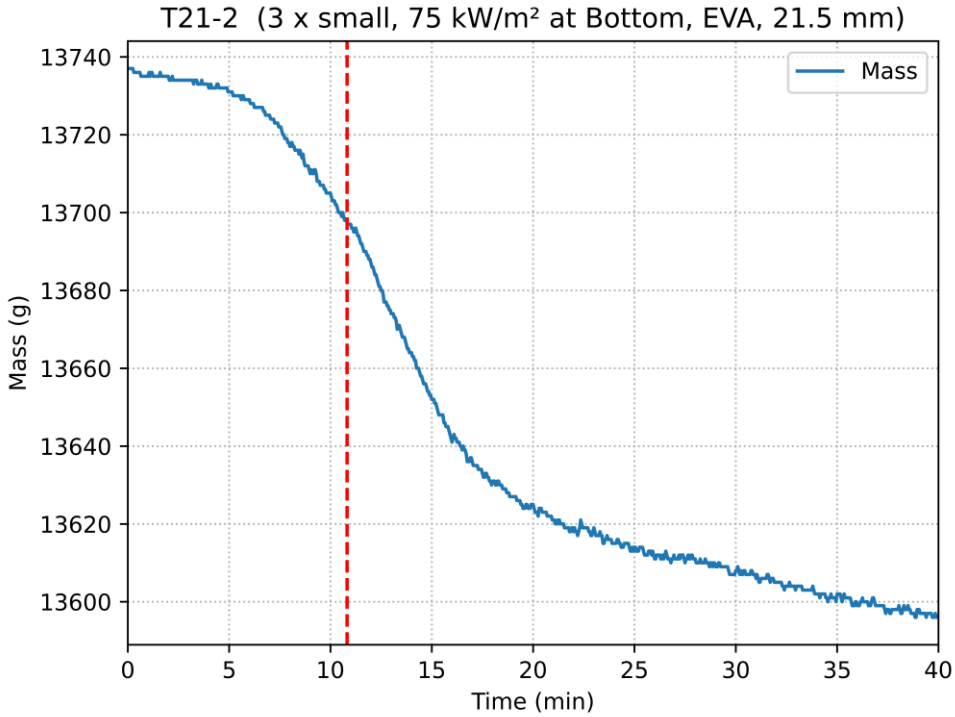
T21-2 (3 x small, 75 kW/m² at Bottom, EVA, 21.5 mm)
Mass
Mass (g)
13740
13720
13700
13680
13660
13640
13620
13600
0
5
10
15
20
25
30
35
40
Time (min)

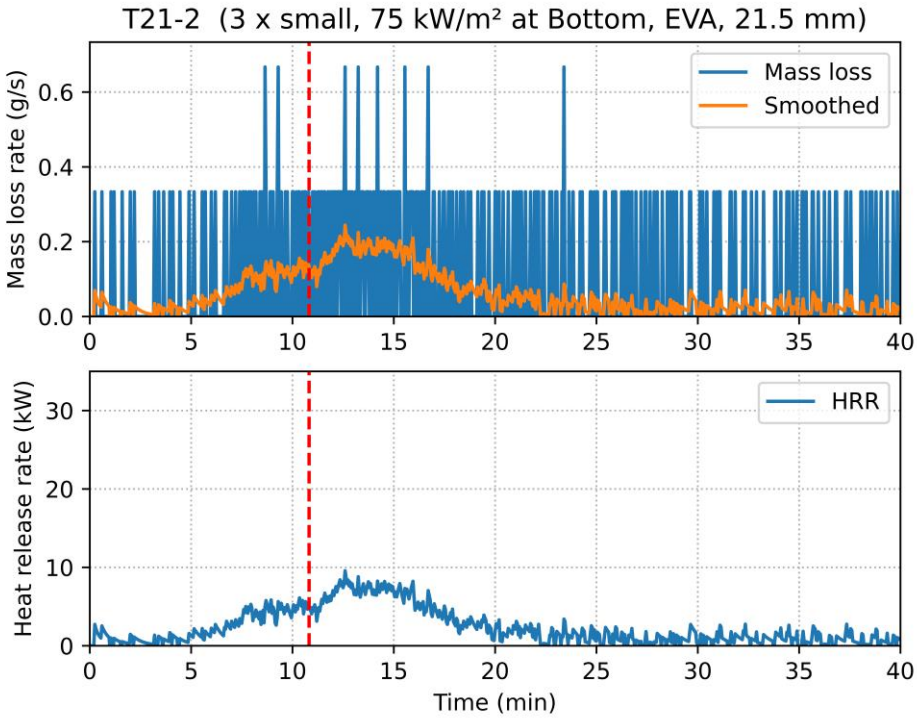
T21-2 (3 x small, 75 kW/m² at Bottom, EVA, 21.5 mm)
Mass loss
Smoothed
Mass loss rate (g/s)
0.6
0.4
0.2
0.0
HRR
Heat release rate (kW)
30
20
10
0
0
5
10
15
20
25
30
35
40
Time (min)

T21-3-B

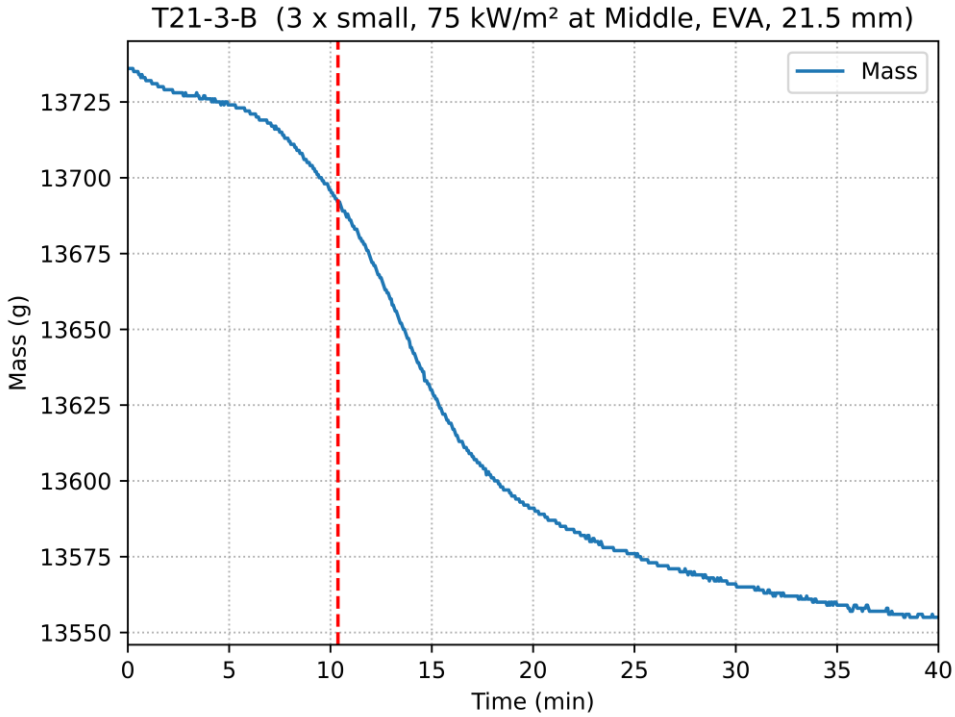
T21-3-B (3 x small, 75 kW/m² at Middle, EVA, 21.5 mm)
Mass
Mass (g)
13725
13700
13675
13650
13625
13600
13575
13550
0
5
10
15
20
25
30
35
40
Time (min)

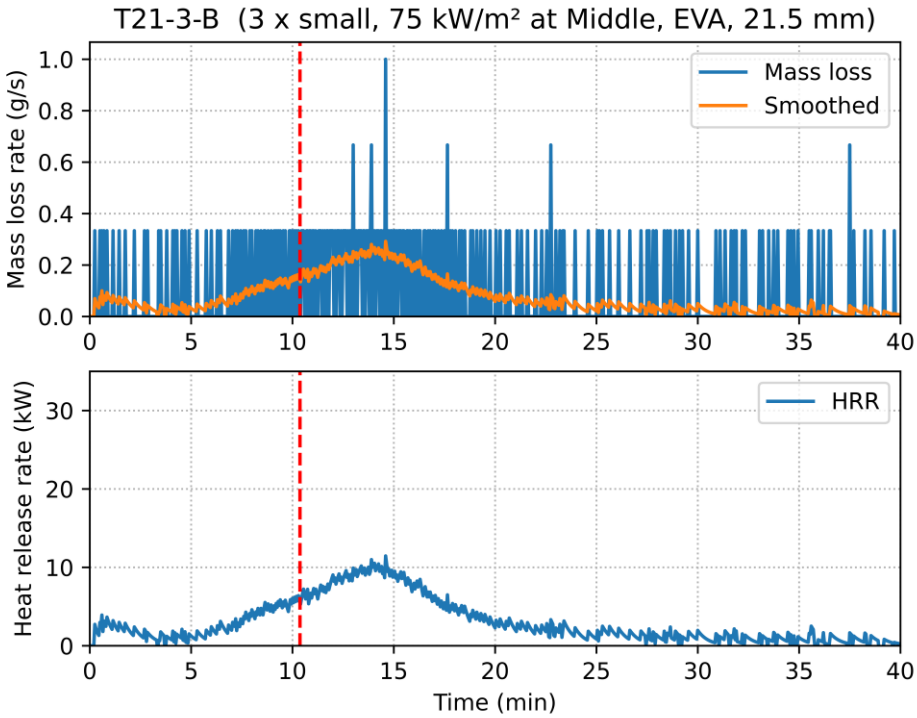
T21-3-B (3 x small, 75 kW/m² at Middle, EVA, 21.5 mm)
Mass loss
Smoothed
Mass loss rate (g/s)
1.0
0.8
0.6
0.4
0.2
0.0
HRR
Heat release rate (kW)
30
20
10
0
0
5
10
15
20
25
30
35
40
Time (min)

T22-1

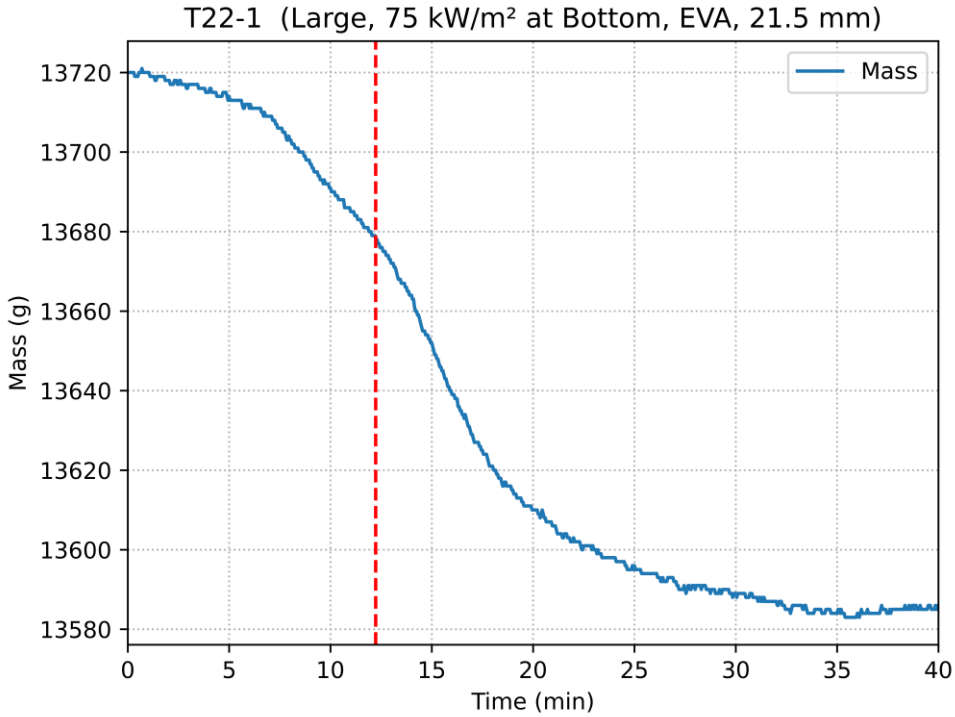
T22-1 (Large, 75 kW/m² at Bottom, EVA, 21.5 mm)
Mass
Mass (g)
13720
13700
13680
13660
13640
13620
13600
13580
0
5
10
15
20
25
30
35
40
Time (min)

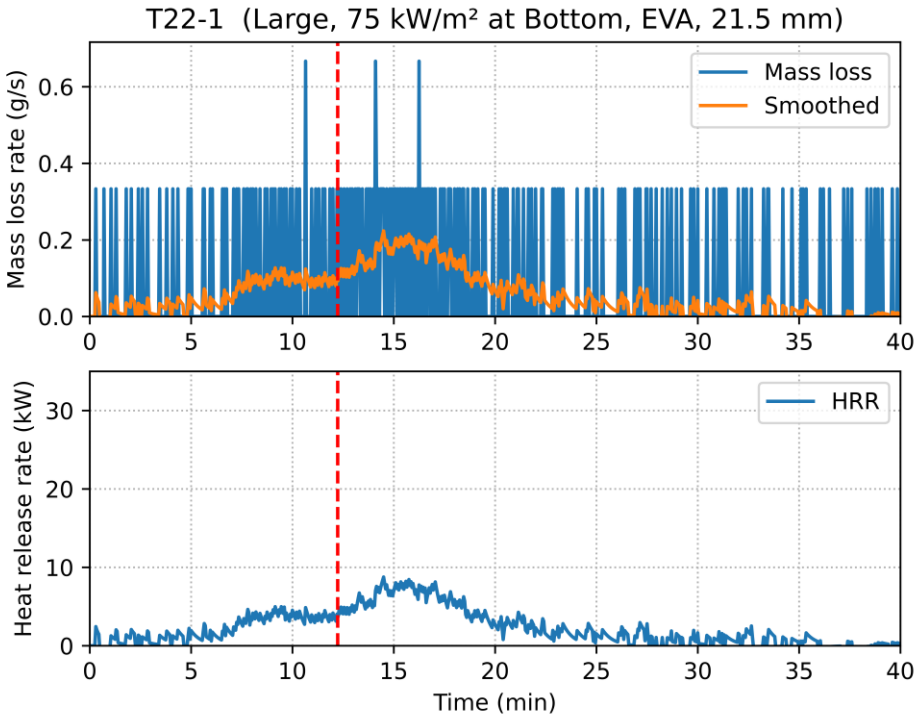
T22-1 (Large, 75 kW/m² at Bottom, EVA, 21.5 mm)
Mass loss
Smoothed
Mass loss rate (g/s)
0.6
0.4
0.2
0.0
HRR
Heat release rate (kW)
30
20
10
0
0
5
10
15
20
25
30
35
40
Time (min)

T23-1

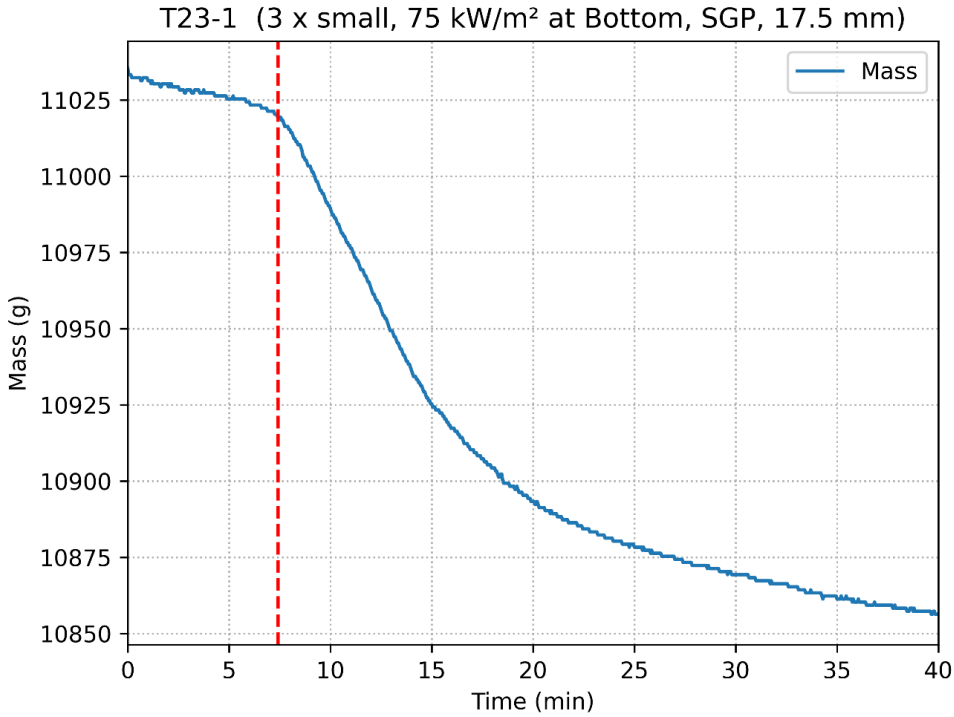
T23-1 (3 x small, 75 kW/m² at Bottom, SGP, 17.5 mm)
Mass
Mass (g)
11025
11000
10975
10950
10925
10900
10875
10850
0
5
10
15
20
25
30
35
40
Time (min)

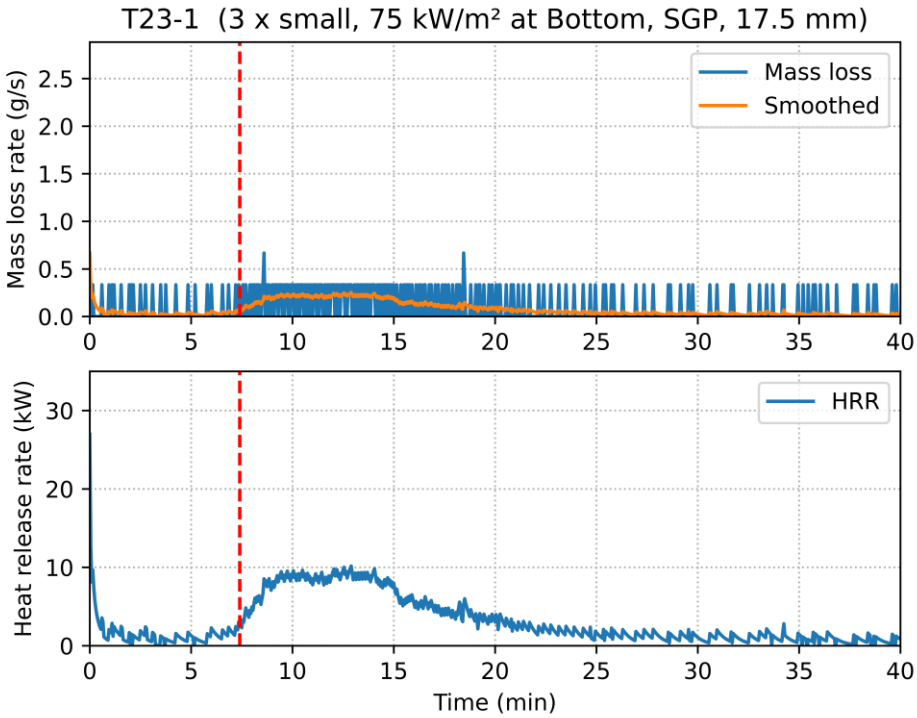
T23-1 (3 x small, 75 kW/m² at Bottom, SGP, 17.5 mm)
Mass loss
Smoothed
Mass loss rate (g/s)
2.5
2.0
1.5
1.0
0.5
0.0
HRR
Heat release rate (kW)
30
20
10
0
0
5
10
15
20
25
30
35
40
Time (min)

T23-2

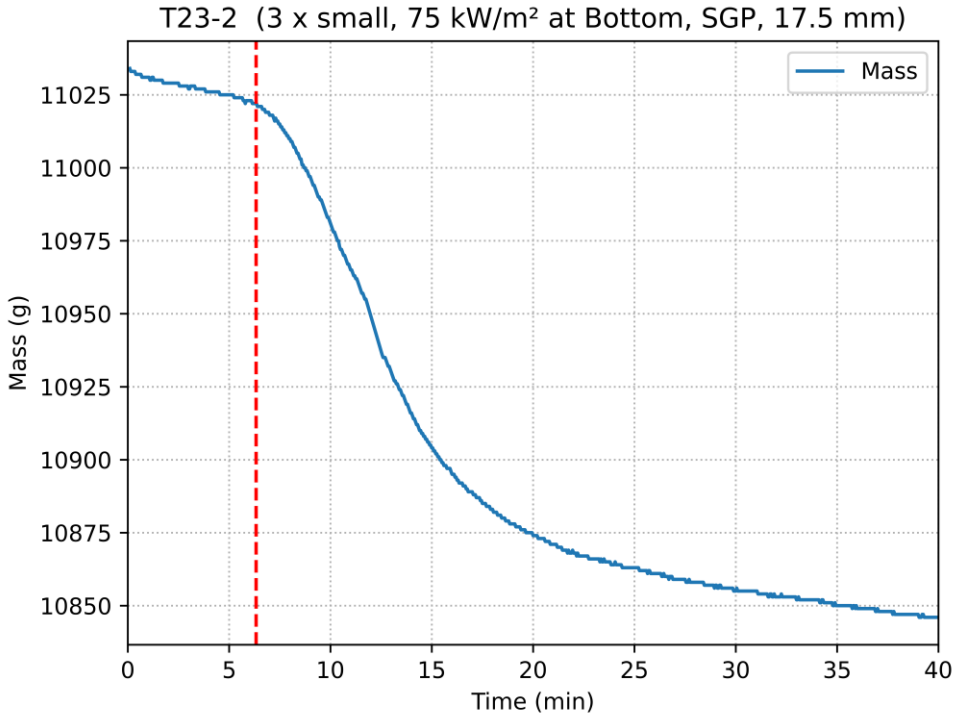
T23-2 (3 x small, 75 kW/m² at Bottom, SGP, 17.5 mm)
Mass
Mass (g)
11025
11000
10975
10950
10925
10900
10875
10850
0
5
10
15
20
25
30
35
40
Time (min)

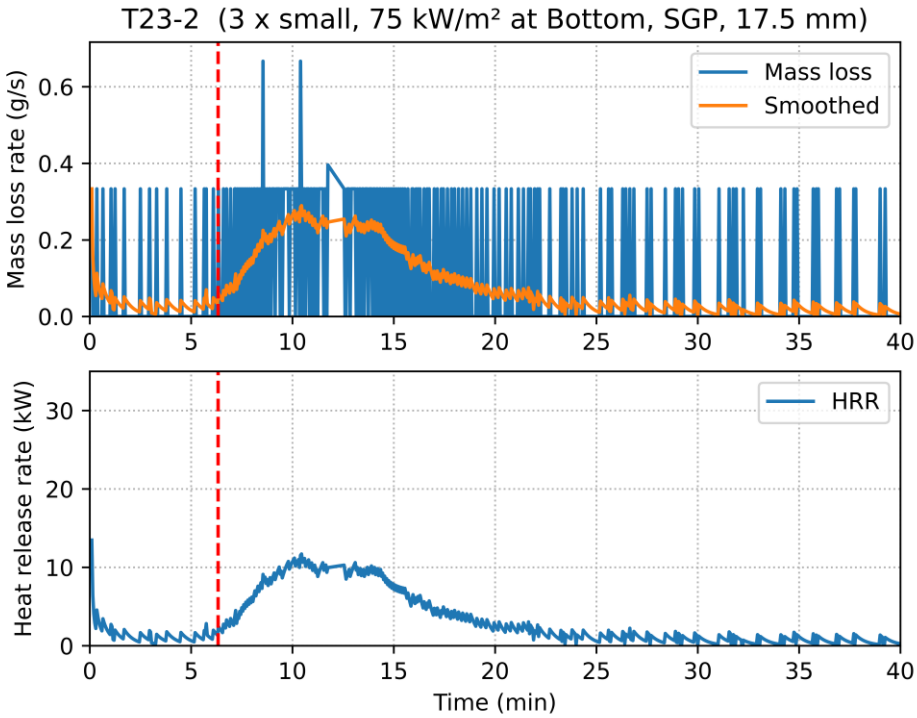
T23-2 (3 x small, 75 kW/m² at Bottom, SGP, 17.5 mm)
Mass loss
Smoothed
Mass loss rate (g/s)
0.6
0.4
0.2
0.0
HRR
Heat release rate (kW)
30
20
10
0
0
5
10
15
20
25
30
35
40
Time (min)

T23-3-B

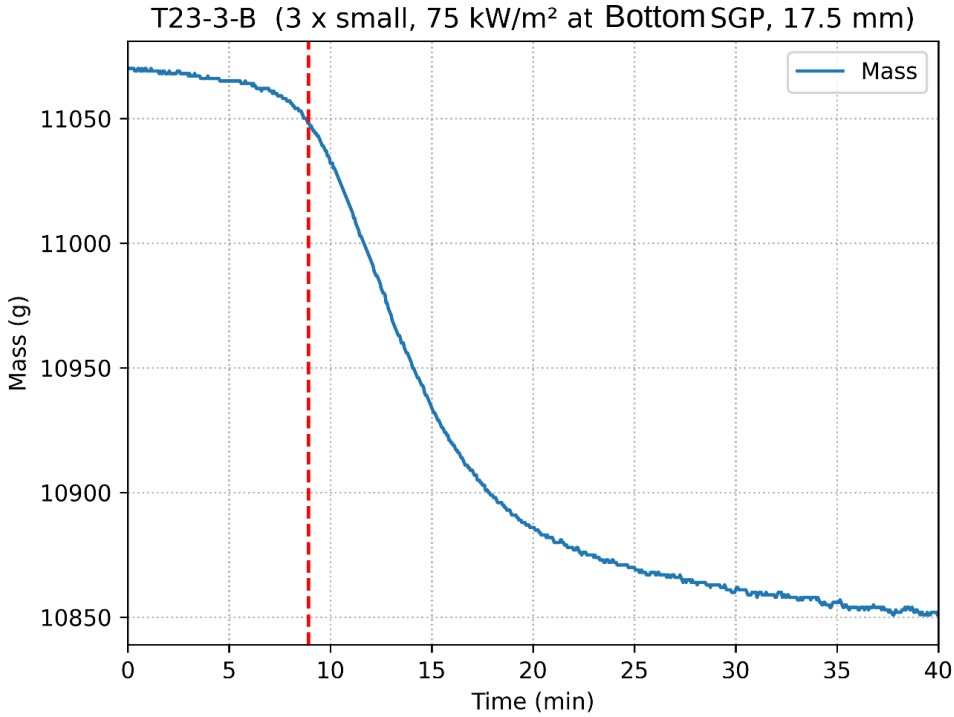
T23-3-B (3 x small, 75 kW/m² at Bottom SGP, 17.5 mm)
Mass
Mass (g)
11050
11000
10950
10900
10850
0
5
10
15
20
25
30
35
40
Time (min)

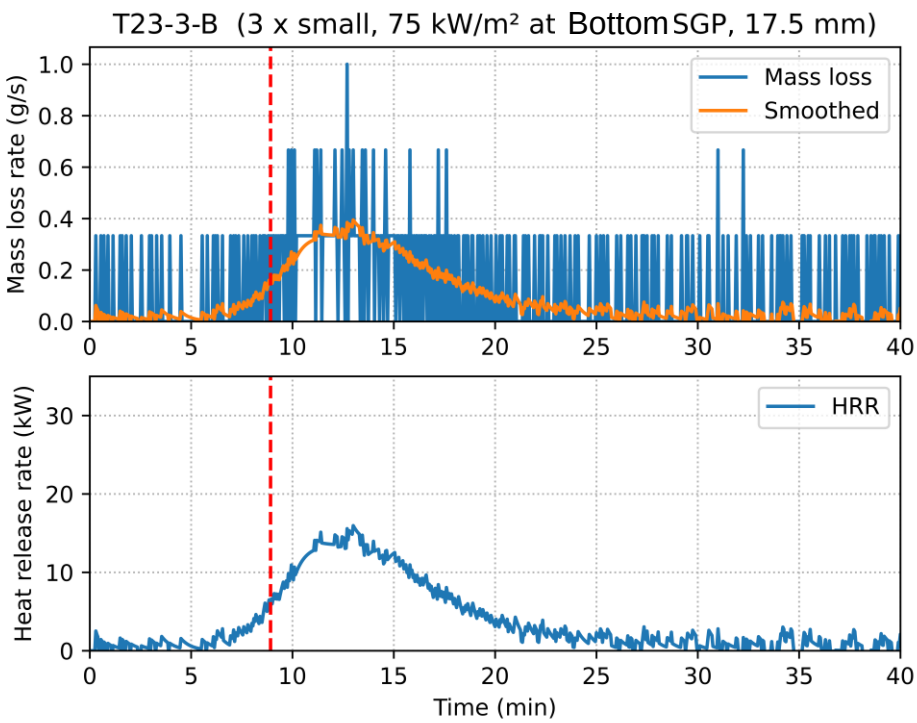
T23-3-B (3 x small, 75 kW/m² at Bottom SGP, 17.5 mm)
Mass loss
Smoothed
Mass loss rate (g/s)
1.0
0.8
0.6
0.4
0.2
0.0
HRR
Heat release rate (kW)
30
20
10
0
0
5
10
15
20
25
30
35
40
Time (min)

T24-1

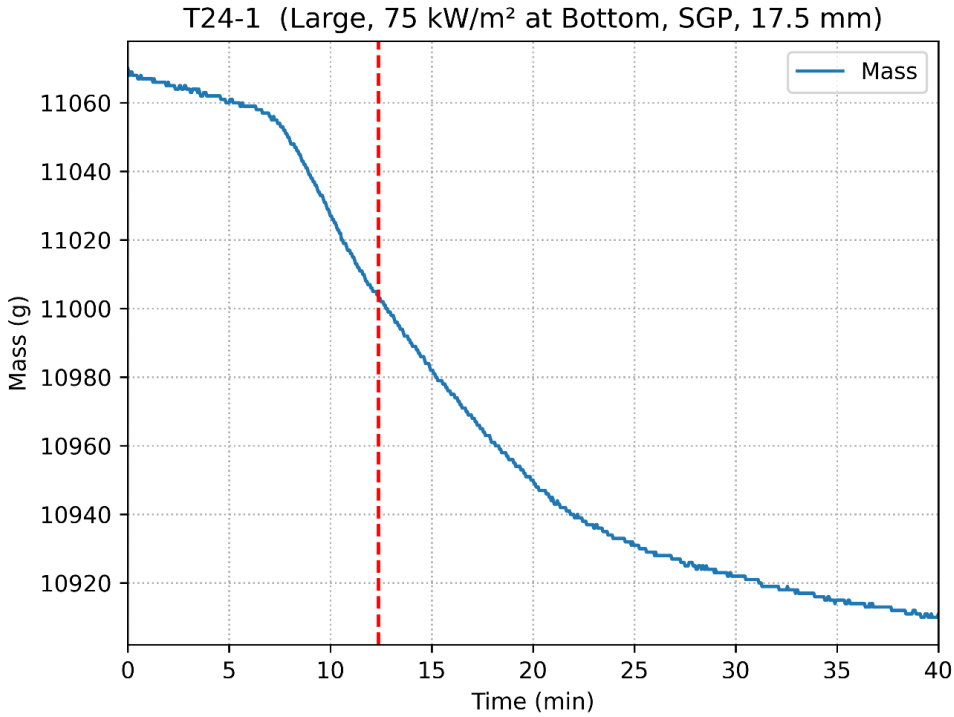
T24-1 (Large, 75 kW/m² at Bottom, SGP, 17.5 mm)
Mass
Mass (g)
11060
11040
11020
11000
10980
10960
10940
10920
0
5
10
15
20
25
30
35
40
Time (min)

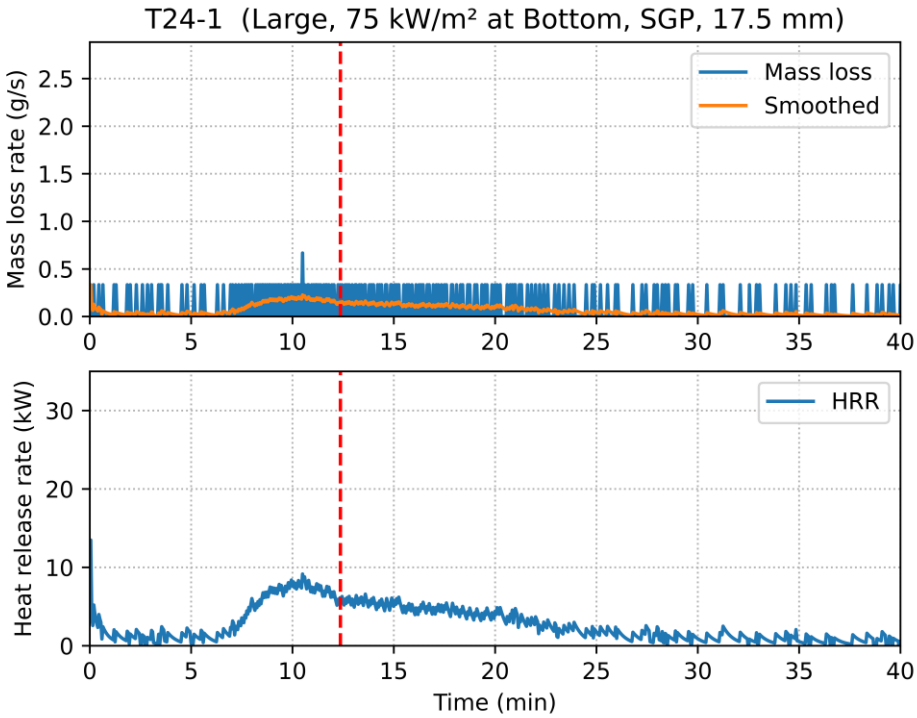
T24-1 (Large, 75 kW/m² at Bottom, SGP, 17.5 mm)
Mass loss
Smoothed
Mass loss rate (g/s)
2.5
2.0
1.5
1.0
0.5
0.0
0
5
10
15
20
25
30
35
40
HRR
Heat release rate (kW)
30
20
10
0
Time (min)

T24-2

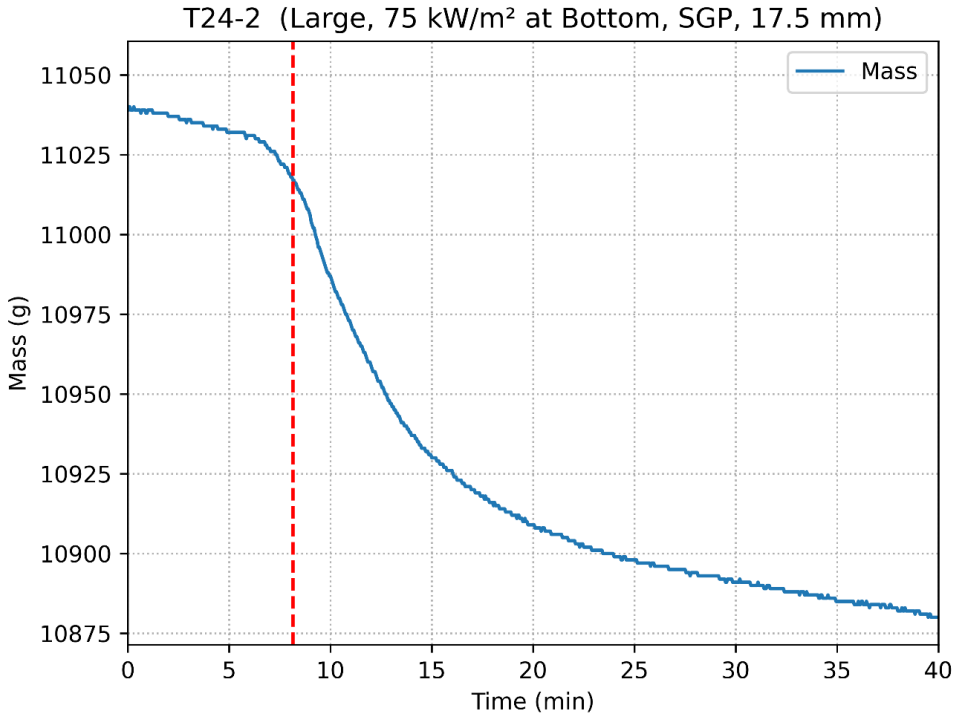
T24-2 (Large, 75 kW/m² at Bottom, SGP, 17.5 mm)
Mass
Mass (g)
11050
11025
11000
10975
10950
10925
10900
10875
0
5
10
15
20
25
30
35
40
Time (min)

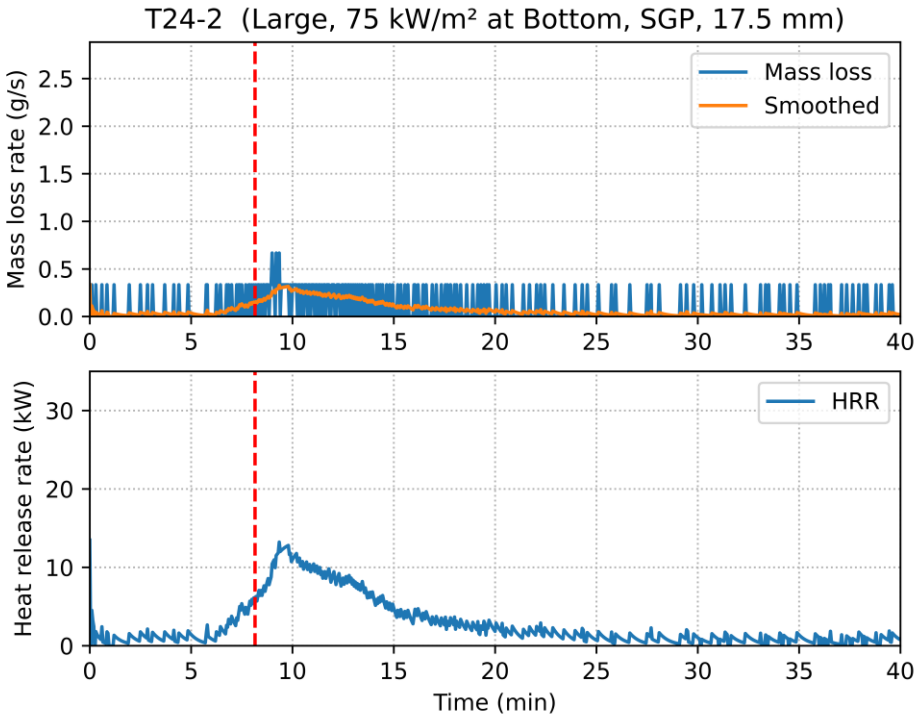
T24-2 (Large, 75 kW/m² at Bottom, SGP, 17.5 mm)
Mass loss
Smoothed
Mass loss rate (g/s)
2.5
2.0
1.5
1.0
0.5
0.0
HRR
Heat release rate (kW)
30
20
10
0
0
5
10
15
20
25
30
35
40
Time (min)

T24-3-B

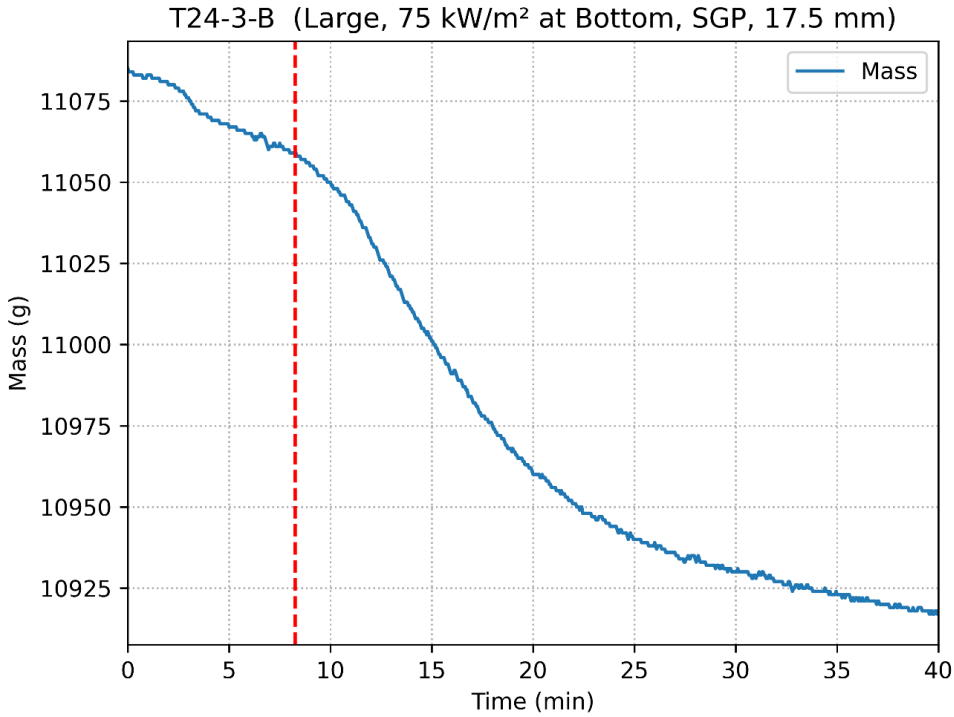
T24-3-B (Large, 75 kW/m² at Bottom, SGP, 17.5 mm)
Mass
Mass (g)
11075
11050
11025
11000
10975
10950
10925
0
5
10
15
20
25
30
35
40
Time (min)

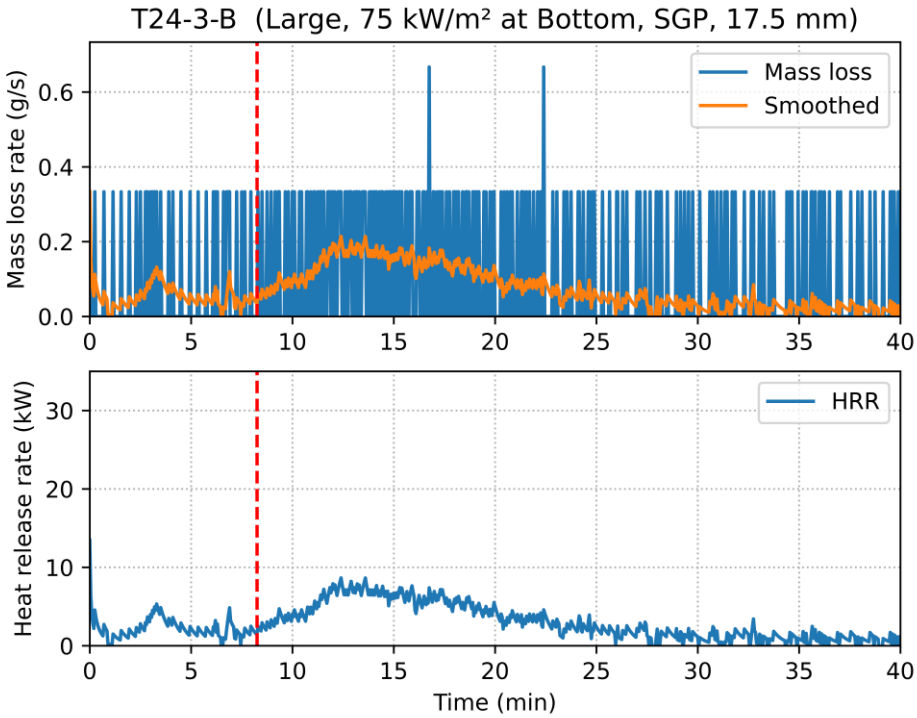
T24-3-B (Large, 75 kW/m² at Bottom, SGP, 17.5 mm)
Mass loss
Smoothed
Mass loss rate (g/s)
0.6
0.4
0.2
0.0
HRR
Heat release rate (kW)
30
20
10
0
0
5
10
15
20
25
30
35
40
Time (min)

T25-1

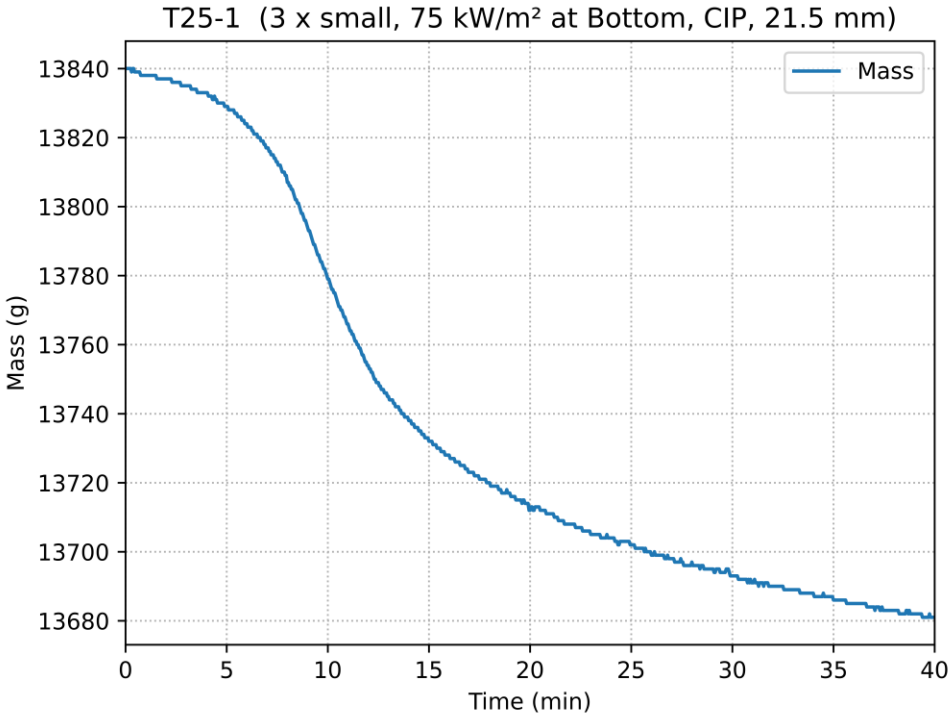
T25-1 (3 x small, 75 kW/m² at Bottom, CIP, 21.5 mm)
Mass
Mass (g)
13840
13820
13800
13780
13760
13740
13720
13700
13680
0
5
10
15
20
25
30
35
40
Time (min)

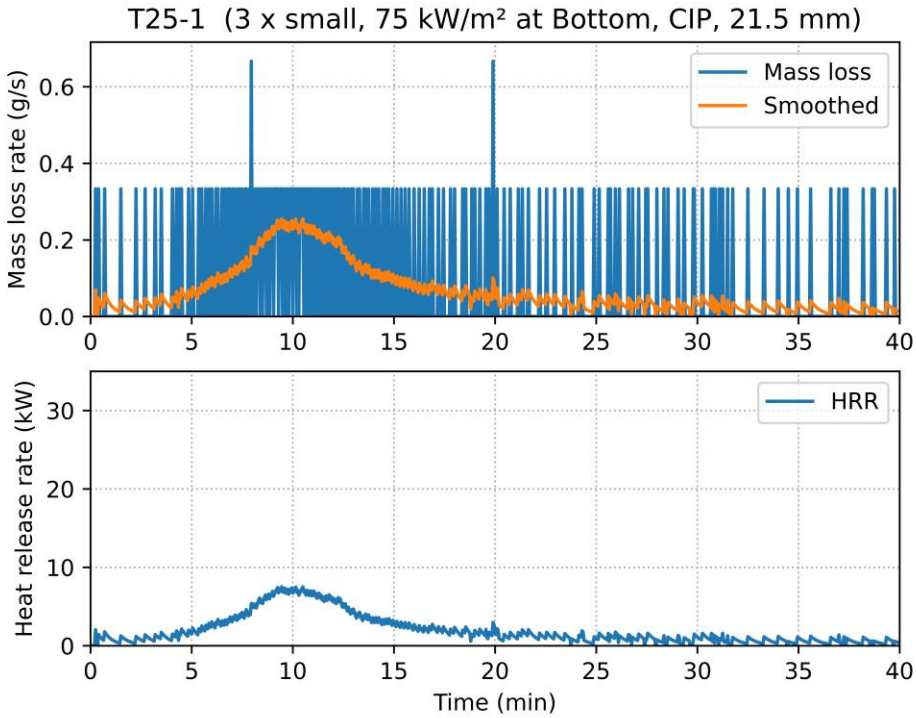
T25-1 (3 x small, 75 kW/m² at Bottom, CIP, 21.5 mm)
Mass loss
Smoothed
Mass loss rate (g/s)
0.6
0.4
0.2
0.0
HRR
Heat release rate (kW)
30
20
10
0
0
5
10
15
20
25
30
35
40
Time (min)

T25-2

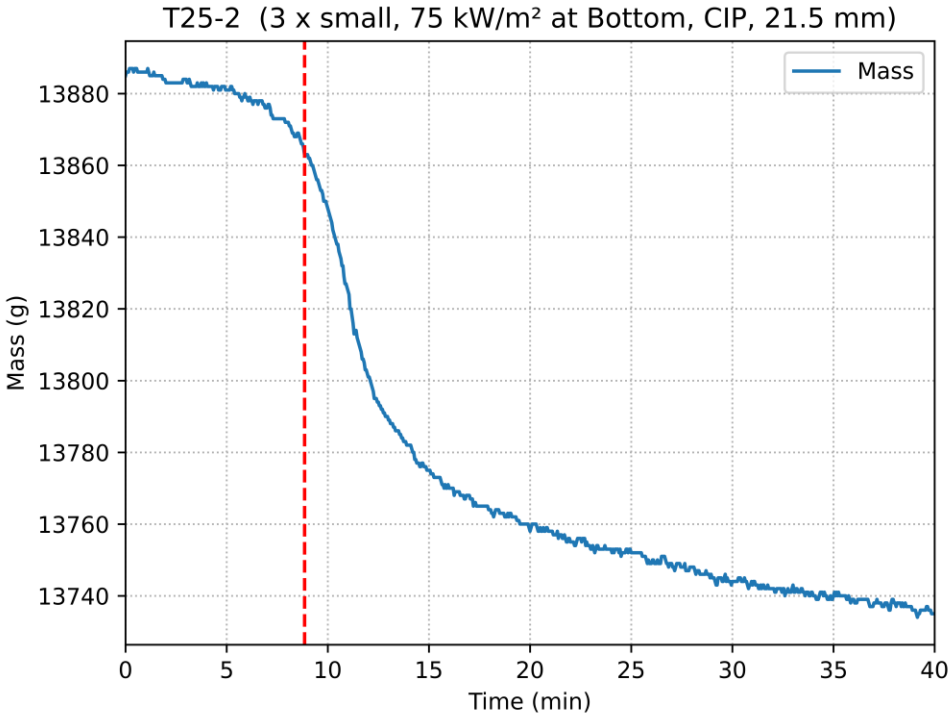
T25-2 (3 x small, 75 kW/m² at Bottom, CIP, 21.5 mm)
Mass
Mass (g)
13880
13860
13840
13820
13800
13780
13760
13740
0
5
10
15
20
25
30
35
40
Time (min)

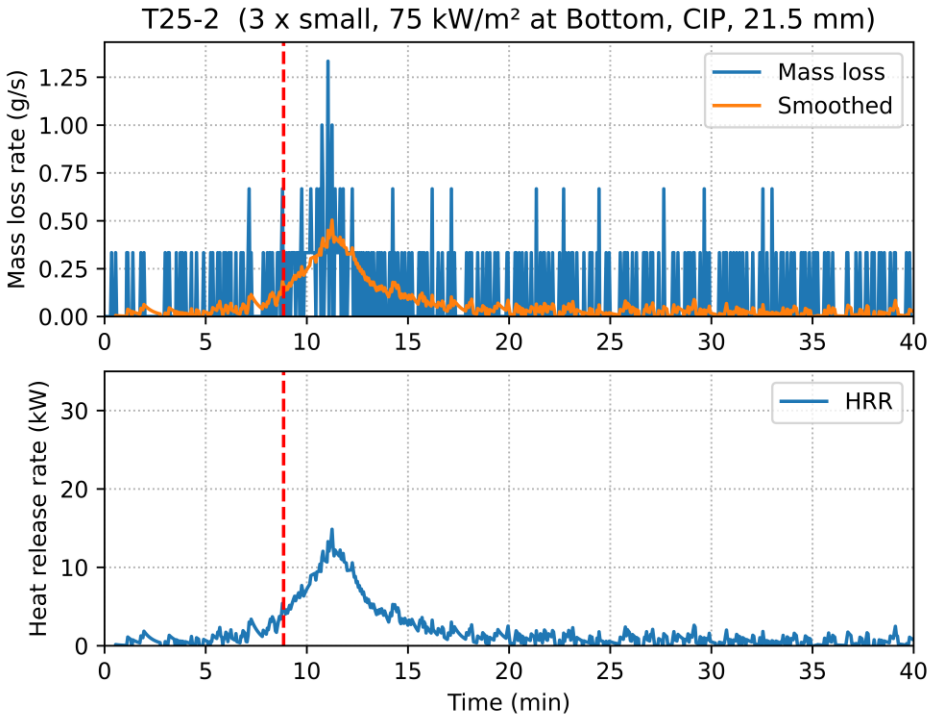
T25-2 (3 x small, 75 kW/m² at Bottom, CIP, 21.5 mm)
Mass loss
Smoothed
Mass loss rate (g/s)
1.25
1.00
0.75
0.50
0.25
0.00
HRR
Heat release rate (kW)
30
20
10
0
0
5
10
15
20
25
30
35
40
Time (min)

T27-1-B

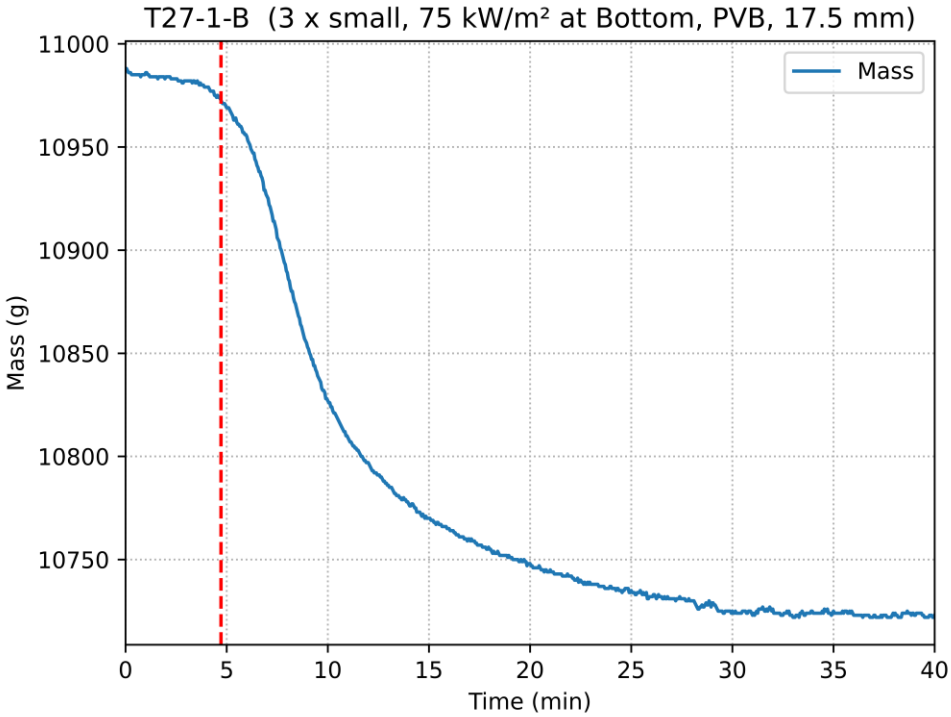
T27-1-B (3 x small, 75 kW/m² at Bottom, PVB, 17.5 mm)
Mass
Mass (g)
11000
10950
10900
10850
10800
10750
0
5
10
15
20
25
30
35
40
Time (min)

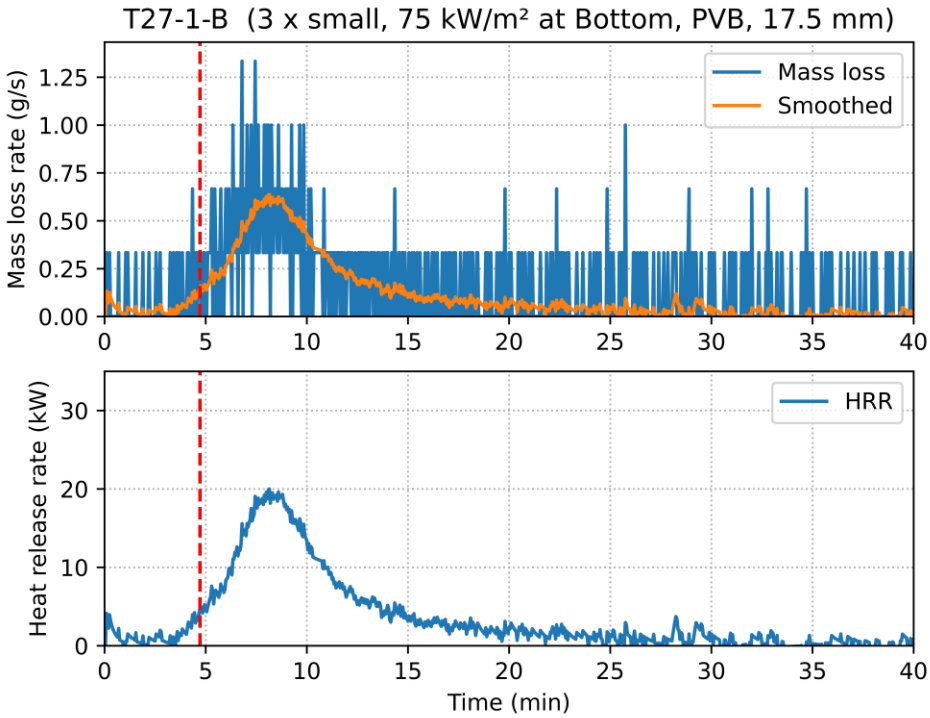
T27-1-B (3 x small, 75 kW/m² at Bottom, PVB, 17.5 mm)
Mass loss
Smoothed
Mass loss rate (g/s)
1.25
1.00
0.75
0.50
0.25
0.00
HRR
Heat release rate (kW)
30
20
10
0
0
5
10
15
20
25
30
35
40
Time (min)

T27-2-B

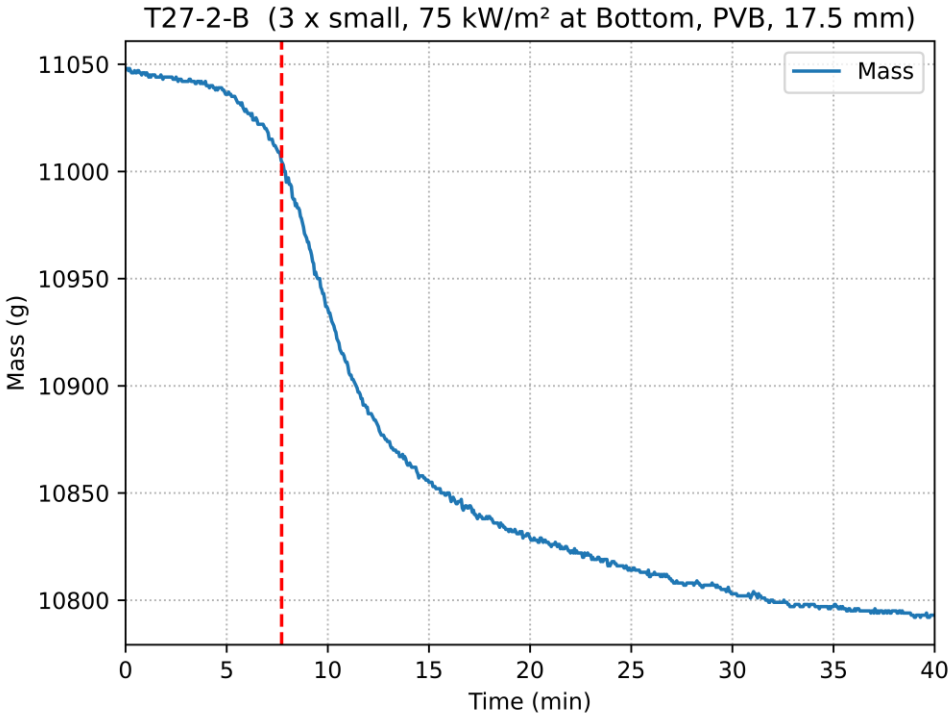
T27-2-B (3 x small, 75 kW/m² at Bottom, PVB, 17.5 mm)
Mass
Mass (g)
11050
11000
10950
10900
10850
10800
0
5
10
15
20
25
30
35
40
Time (min)

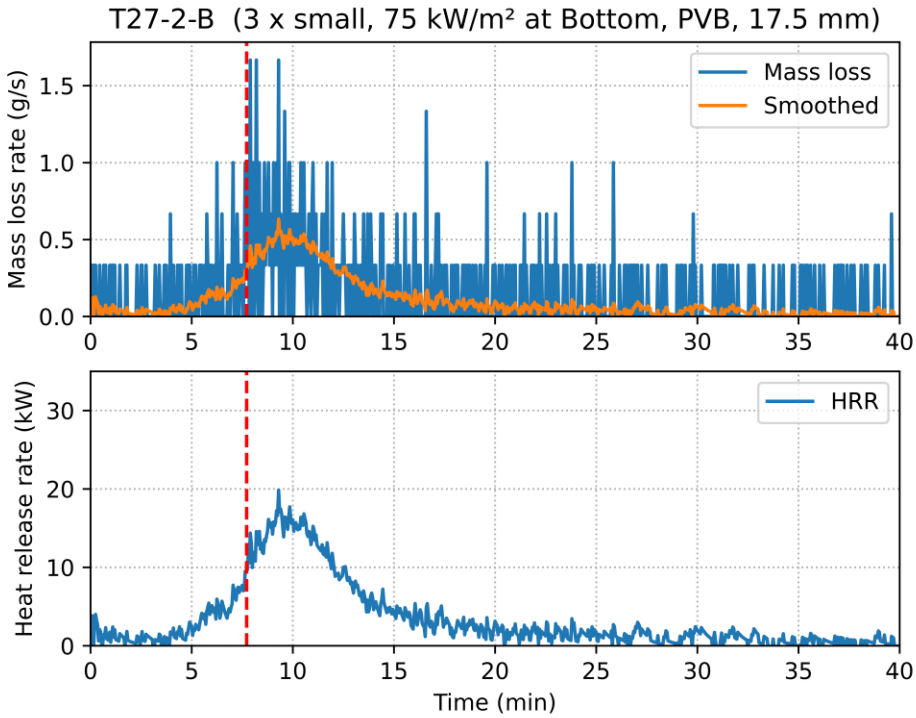
T27-2-B (3 x small, 75 kW/m² at Bottom, PVB, 17.5 mm)
Mass loss
Smoothed
Mass loss rate (g/s)
1.5
1.0
0.5
0.0
HRR
Heat release rate (kW)
30
20
10
0
0
5
10
15
20
25
30
35
40
Time (min)

T27-3-B

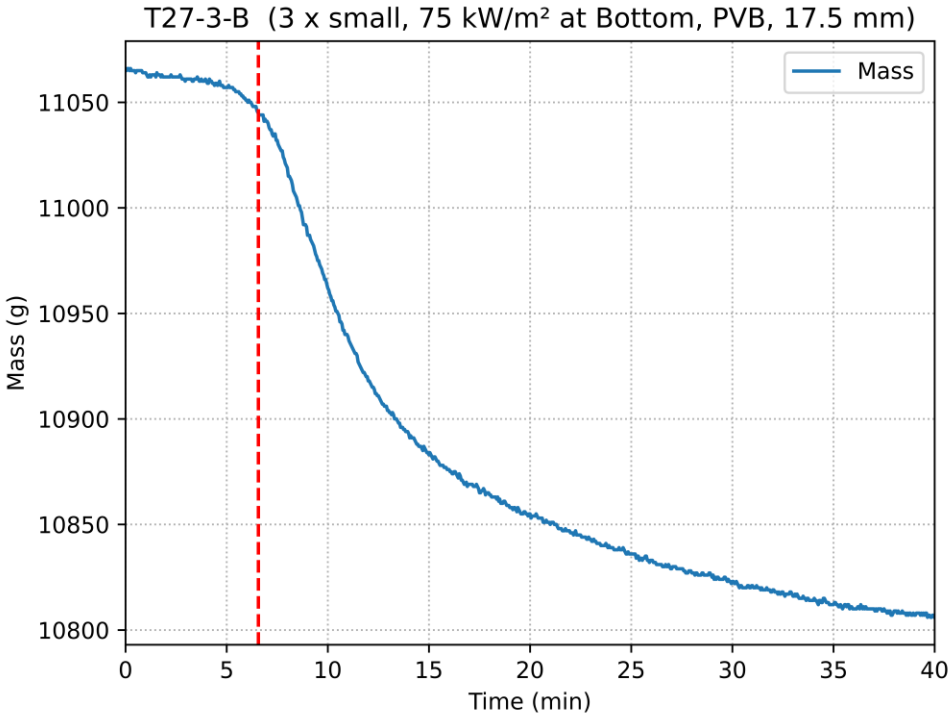
T27-3-B (3 x small, 75 kW/m² at Bottom, PVB, 17.5 mm)
Mass
Mass (g)
11050
11000
10950
10900
10850
10800
0
5
10
15
20
25
30
35
40
Time (min)

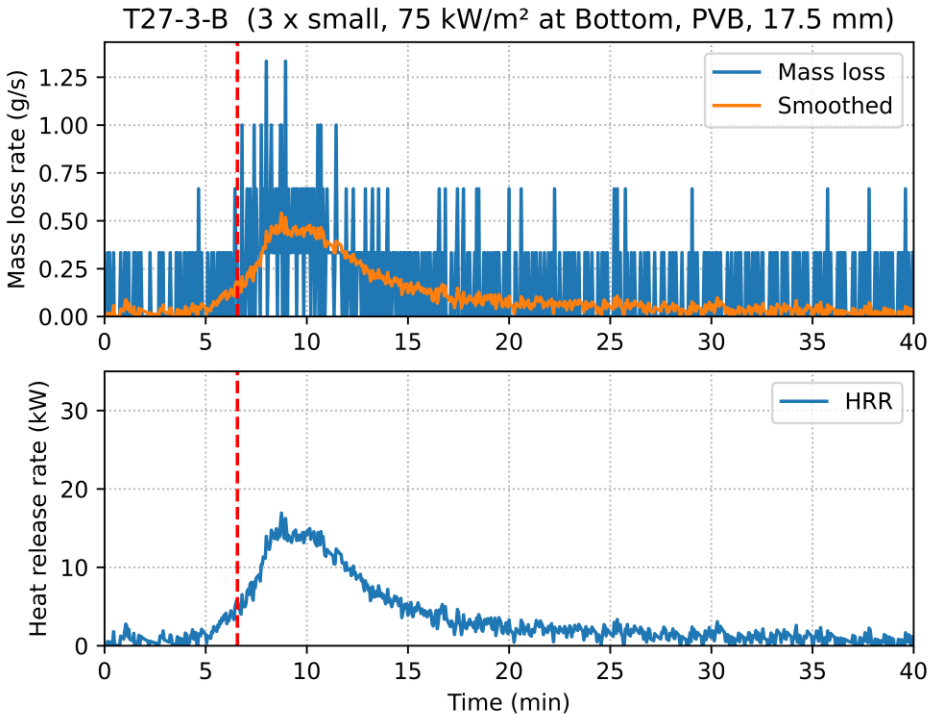
T27-3-B (3 x small, 75 kW/m² at Bottom, PVB, 17.5 mm)
Mass loss
Smoothed
Mass loss rate (g/s)
1.25
1.00
0.75
0.50
0.25
0.00
HRR
Heat release rate (kW)
30
20
10
0
0
5
10
15
20
25
30
35
40
Time (min)

T28-1

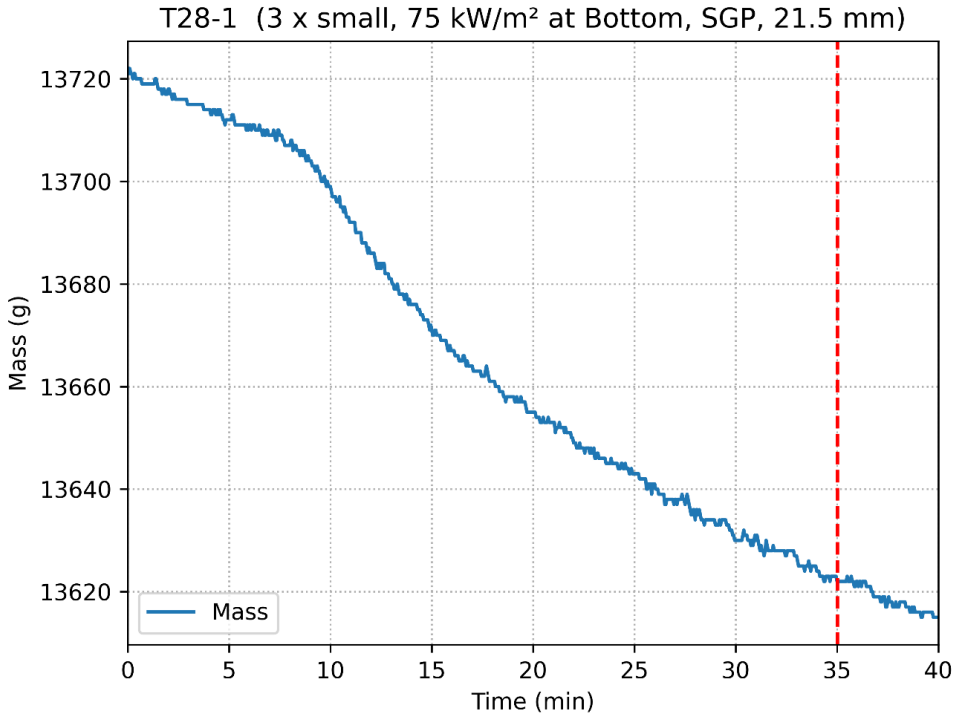
T28-1 (3 x small, 75 kW/m² at Bottom, SGP, 21.5 mm)
Mass (g)
13720
13700
13680
13660
13640
13620
Mass
0
5
10
15
20
25
30
35
40
Time (min)

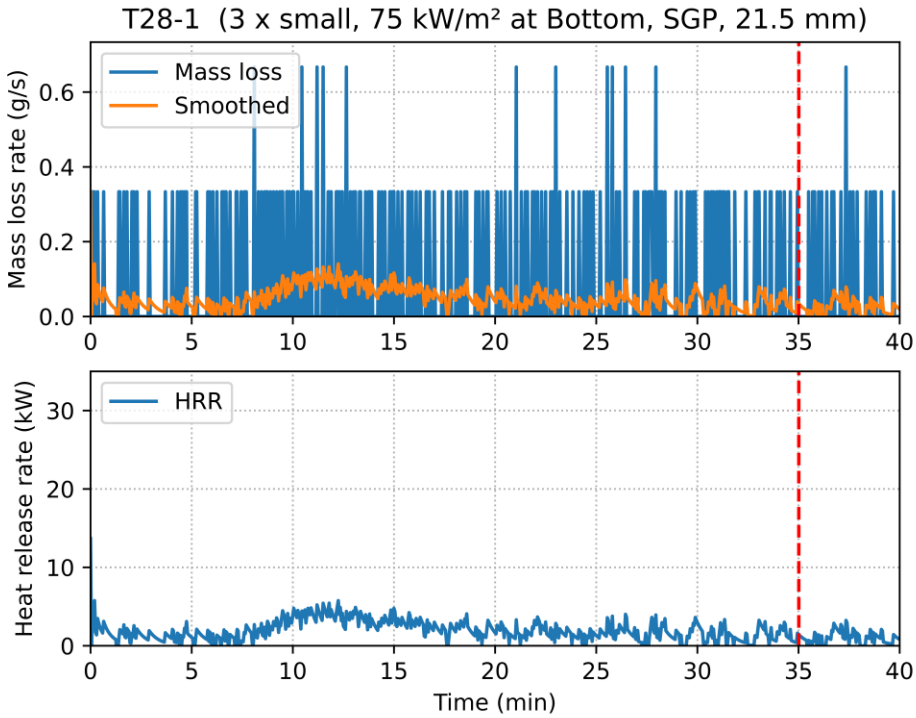
T28-1 (3 x small, 75 kW/m² at Bottom, SGP, 21.5 mm)
Mass loss rate (g/s)
0.6
0.4
0.2
0.0
Mass loss
Smoothed
0
5
10
15
20
25
30
35
40
Heat release rate (kW)
30
20
10
0
HRR
Time (min)

T28-2

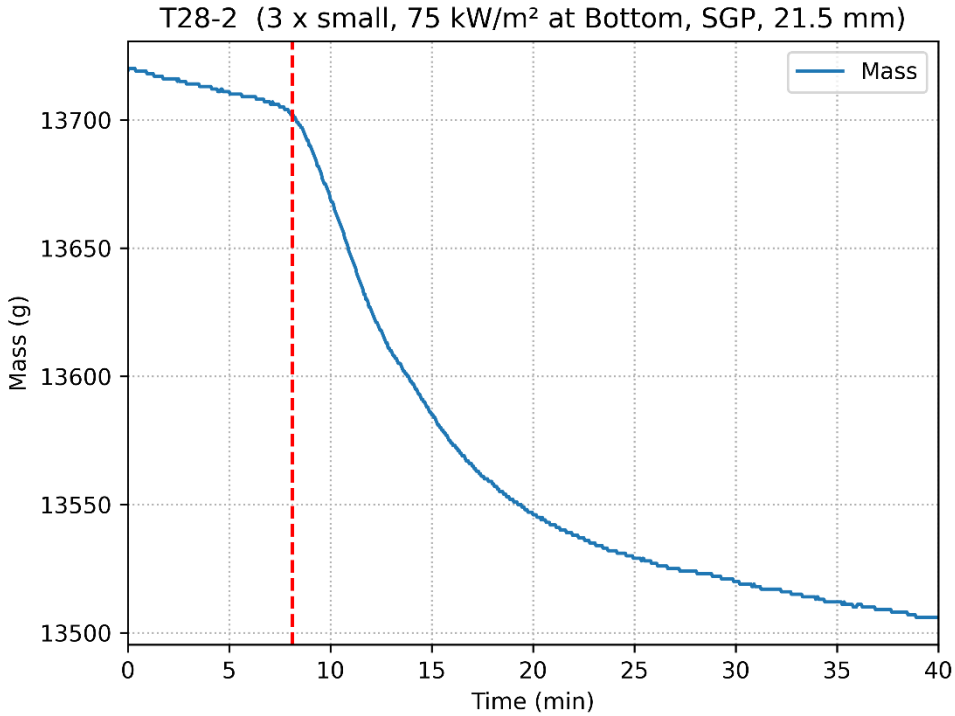
T28-2 (3 x small, 75 kW/m² at Bottom, SGP, 21.5 mm)
Mass
Mass (g)
13700
13650
13600
13550
13500
0
5
10
15
20
25
30
35
40
Time (min)

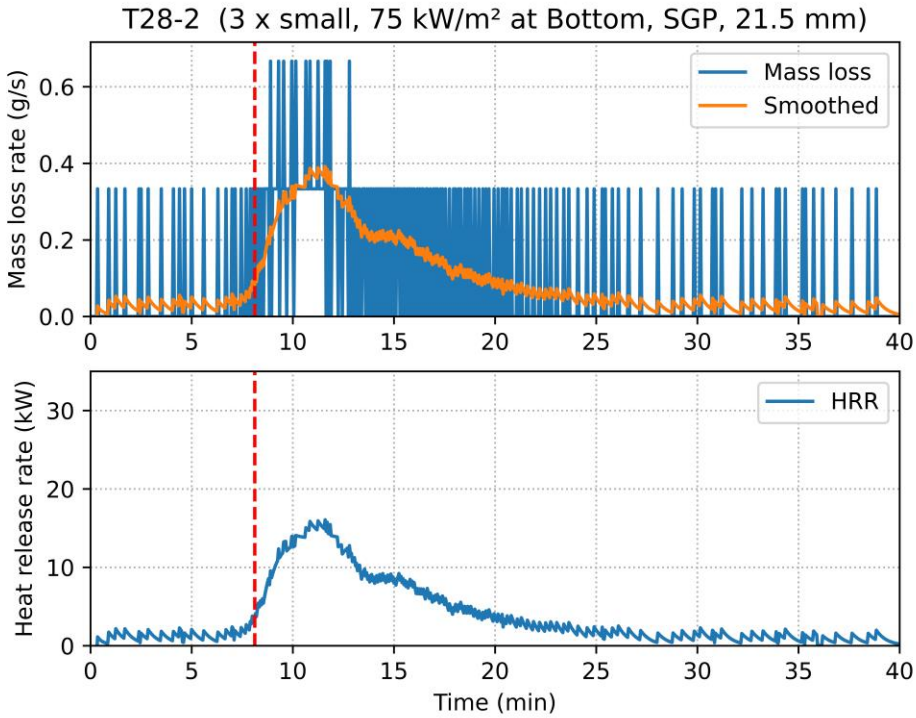
T28-2 (3 x small, 75 kW/m² at Bottom, SGP, 21.5 mm)
Mass loss
Smoothed
Mass loss rate (g/s)
0.6
0.4
0.2
0.0
HRR
Heat release rate (kW)
30
20
10
0
0
5
10
15
20
25
30
35
40
Time (min)

T28-3-B

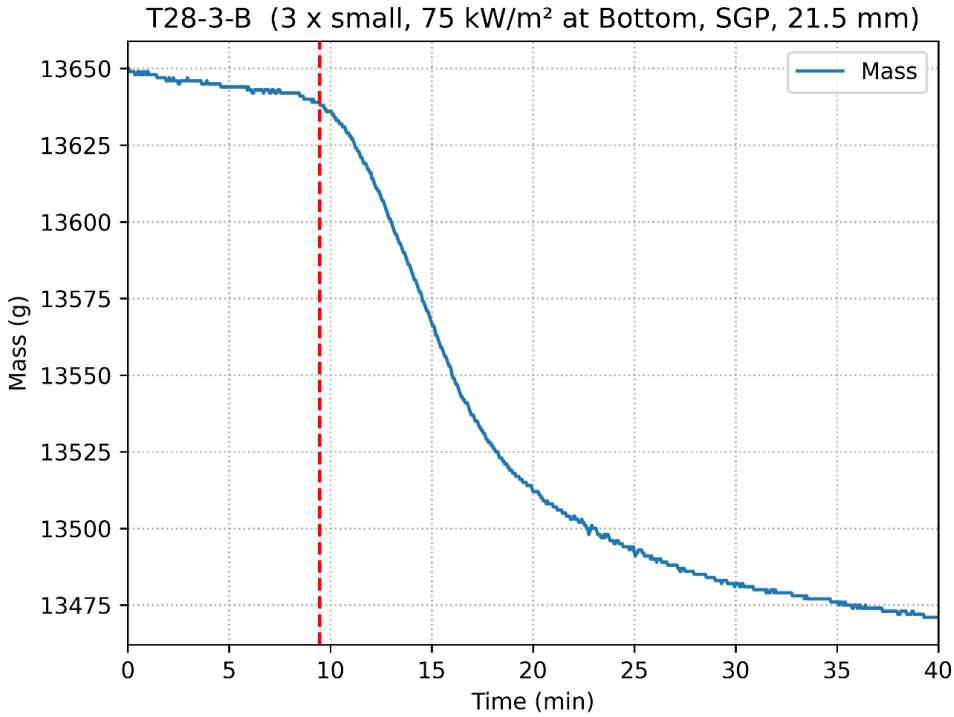
T28-3-B (3 x small, 75 kW/m² at Bottom, SGP, 21.5 mm)
Mass
Mass (g)
13650
13625
13600
13575
13550
13525
13500
13475
0
5
10
15
20
25
30
35
40
Time (min)

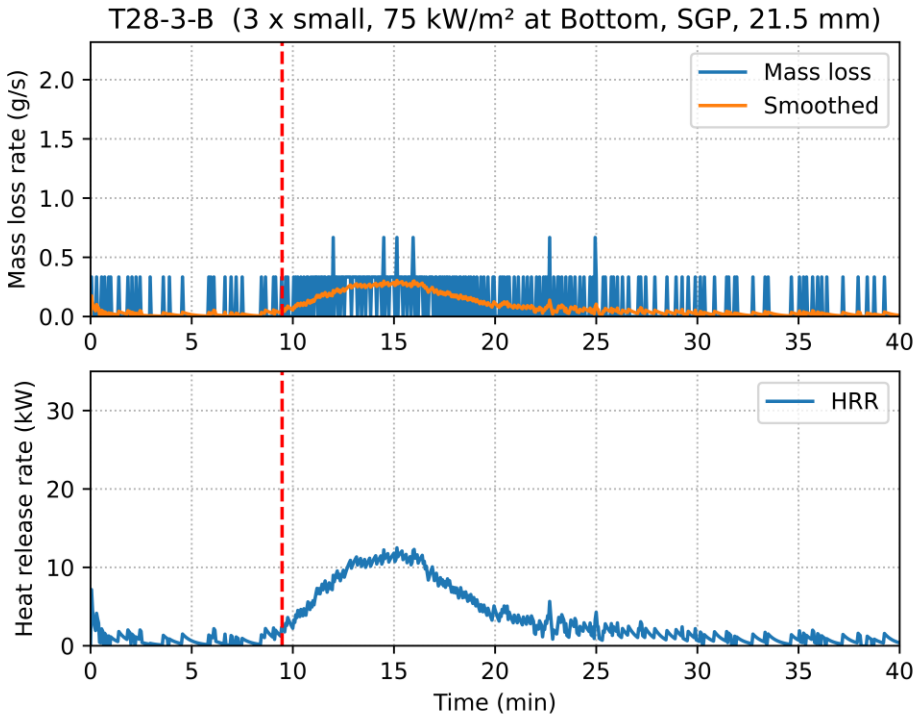
T28-3-B (3 x small, 75 kW/m² at Bottom, SGP, 21.5 mm)
Mass loss
Smoothed
Mass loss rate (g/s)
2.0
1.5
1.0
0.5
0.0
HRR
Heat release rate (kW)
30
20
10
0
0
5
10
15
20
25
30
35
40
Time (min)

T29-1

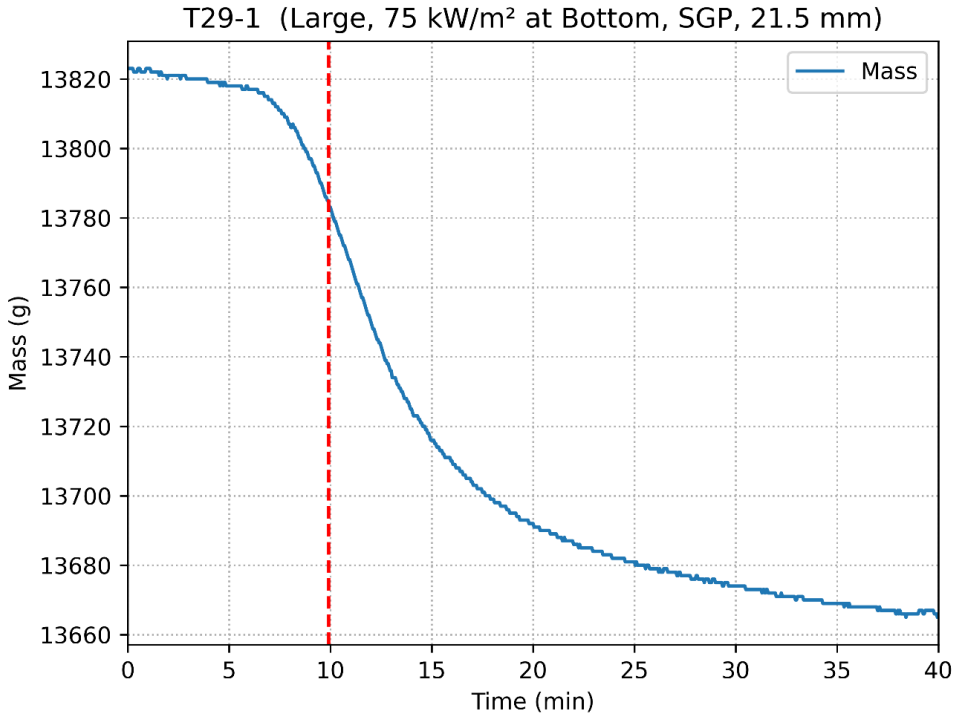
T29-1 (Large, 75 kW/m² at Bottom, SGP, 21.5 mm)
Mass
Mass (g)
13820
13800
13780
13760
13740
13720
13700
13680
13660
0
5
10
15
20
25
30
35
40
Time (min)

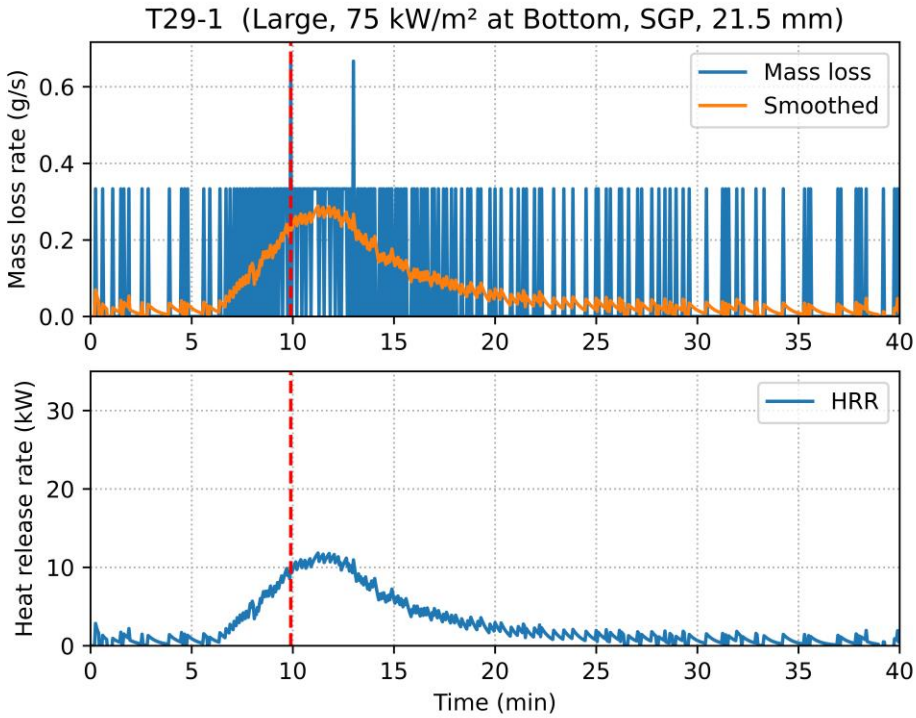
T29-1 (Large, 75 kW/m² at Bottom, SGP, 21.5 mm)
Mass loss
Smoothed
Mass loss rate (g/s)
0.6
0.4
0.2
0.0
HRR
Heat release rate (kW)
30
20
10
0
0
5
10
15
20
25
30
35
40
Time (min)

T29-2

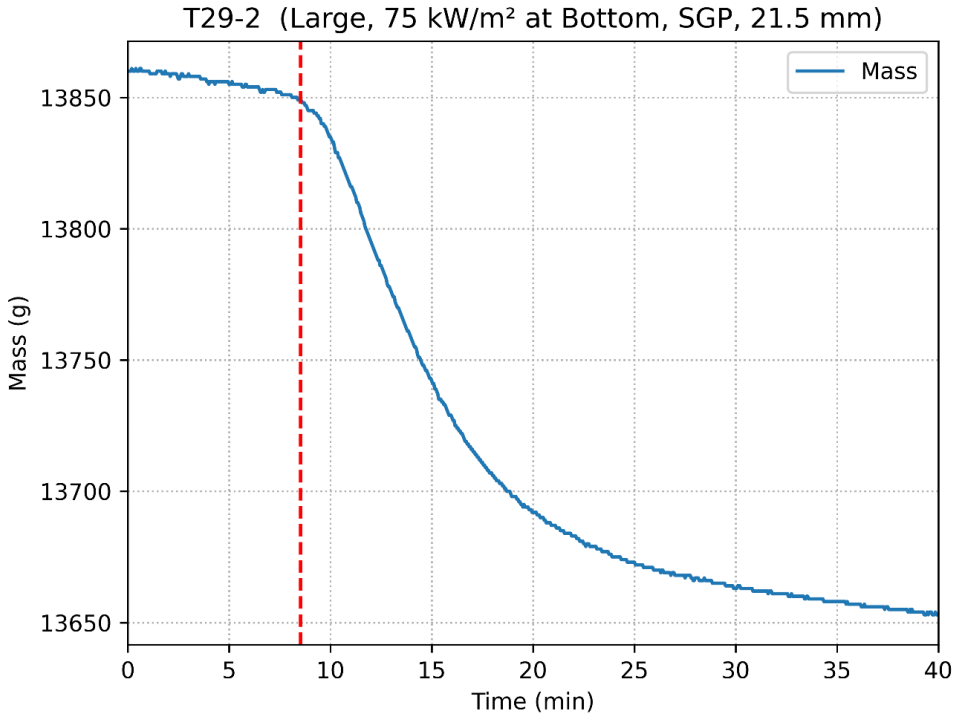
T29-2 (Large, 75 kW/m² at Bottom, SGP, 21.5 mm)
Mass
Mass (g)
13850
13800
13750
13700
13650
0
5
10
15
20
25
30
35
40
Time (min)

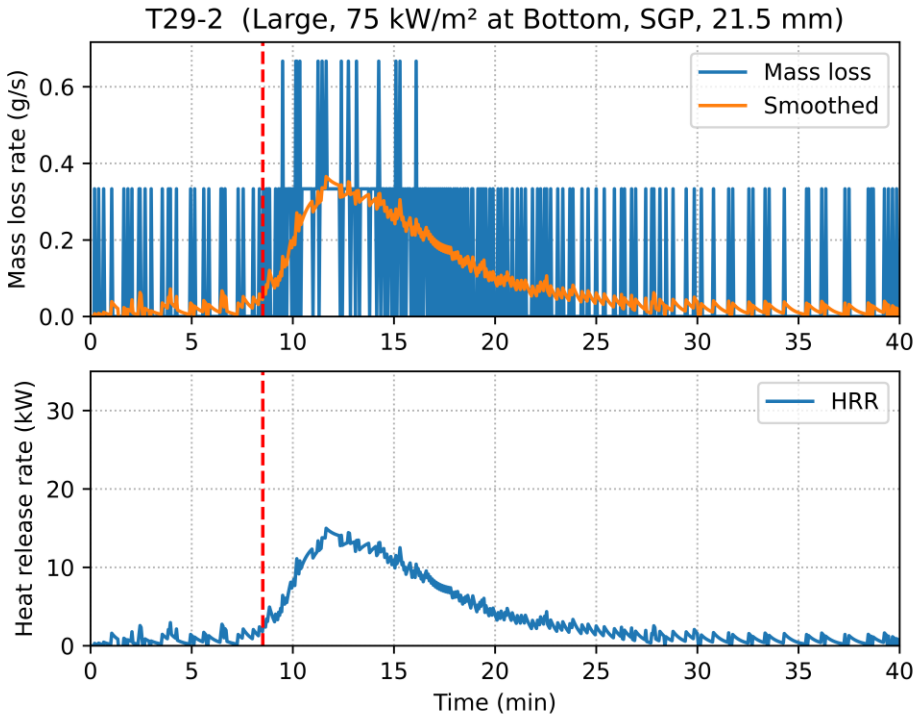
T29-2 (Large, 75 kW/m² at Bottom, SGP, 21.5 mm)
Mass loss
Smoothed
Mass loss rate (g/s)
0.6
0.4
0.2
0.0
HRR
Heat release rate (kW)
30
20
10
0
0
5
10
15
20
25
30
35
40
Time (min)

T29-3-B

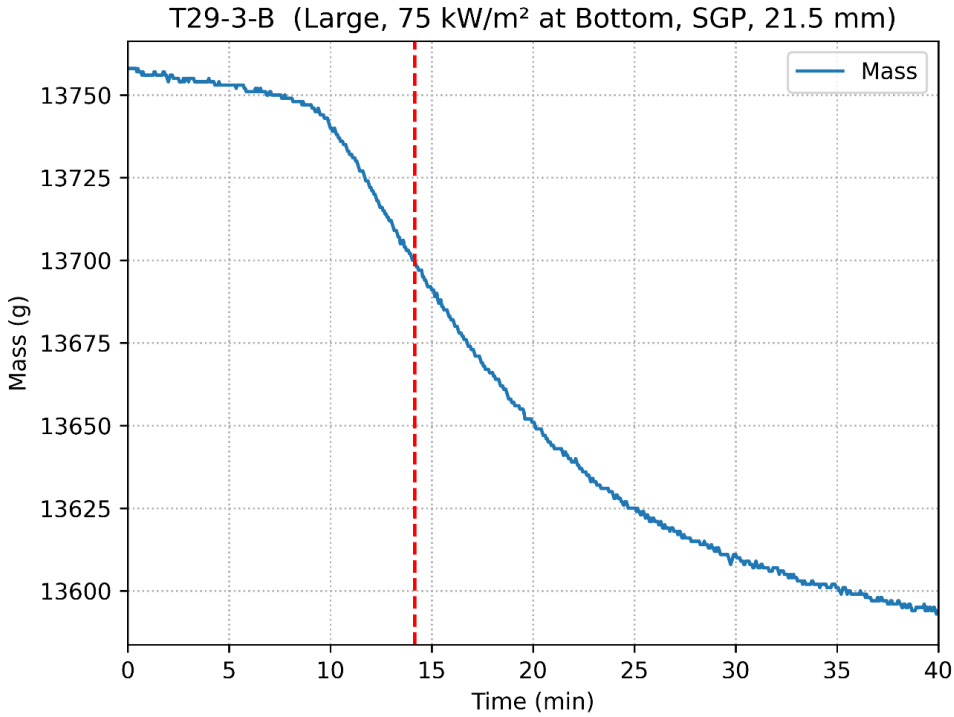
T29-3-B (Large, 75 kW/m² at Bottom, SGP, 21.5 mm)
Mass
Mass (g)
13750
13725
13700
13675
13650
13625
13600
0
5
10
15
20
25
30
35
40
Time (min)

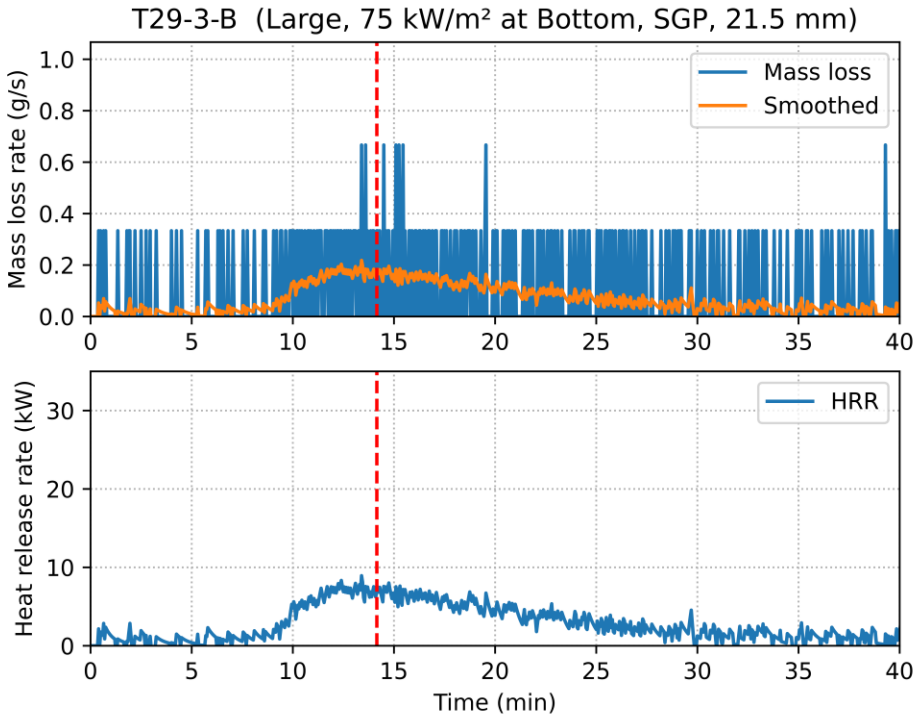
T29-3-B (Large, 75 kW/m² at Bottom, SGP, 21.5 mm)
Mass loss
Smoothed
Mass loss rate (g/s)
1.0
0.8
0.6
0.4
0.2
0.0
HRR
Heat release rate (kW)
30
20
10
0
0
5
10
15
20
25
30
35
40
Time (min)

T30-1

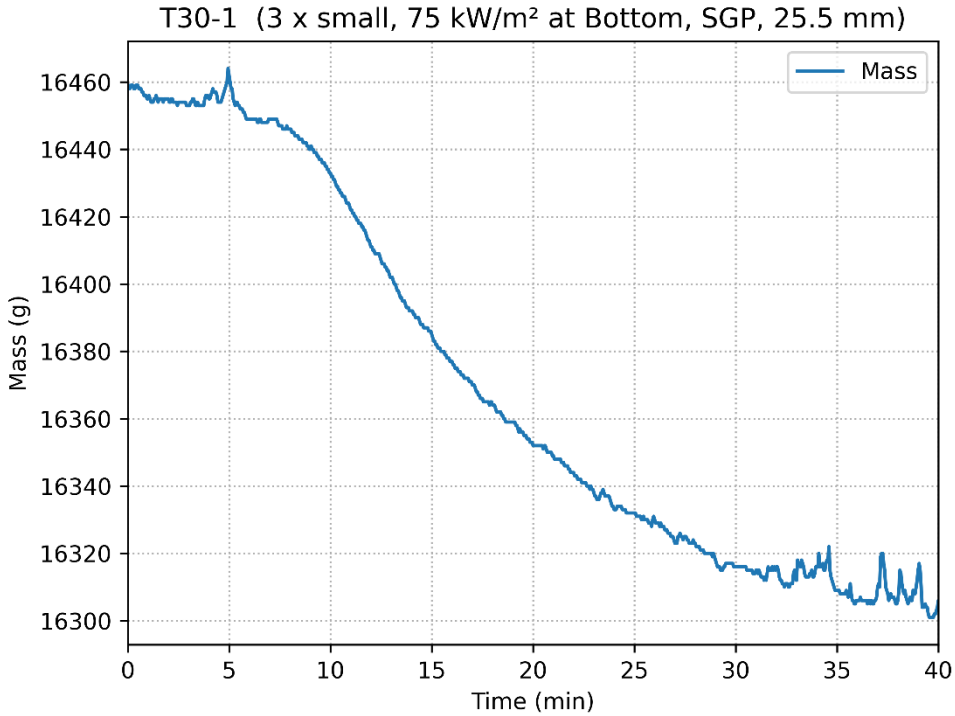
T30-1 (3 x small, 75 kW/m² at Bottom, SGP, 25.5 mm)
Mass
Mass (g)
16460
16440
16420
16400
16380
16360
16340
16320
16300
0
5
10
15
20
25
30
35
40
Time (min)

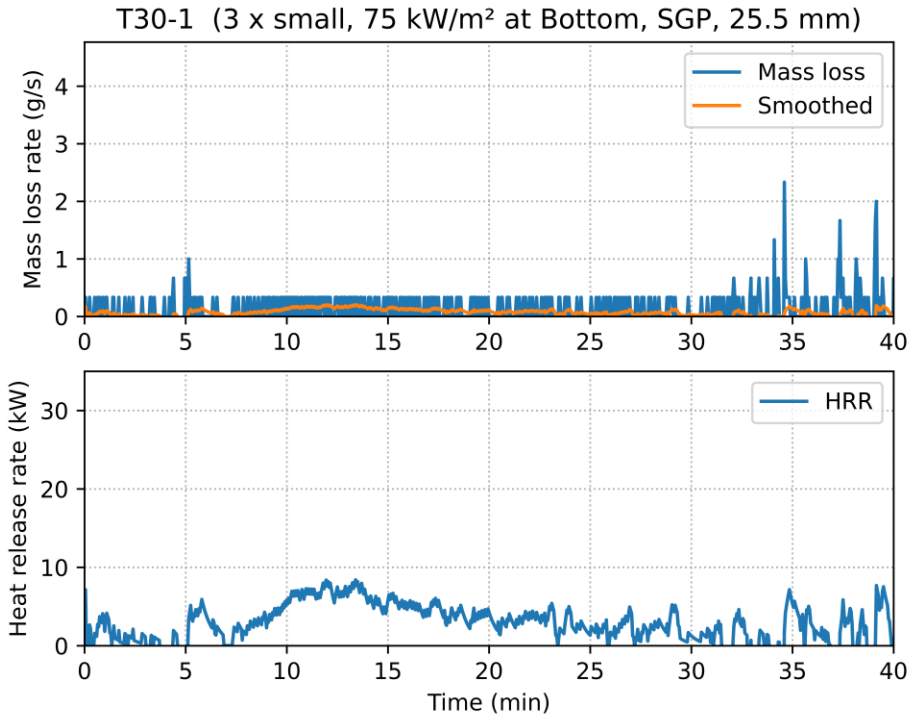
T30-1 (3 x small, 75 kW/m² at Bottom, SGP, 25.5 mm)
Mass loss
Smoothed
Mass loss rate (g/s)
4
3
2
1
0
HRR
Heat release rate (kW)
30
20
10
0
0
5
10
15
20
25
30
35
40
Time (min)

T30-2

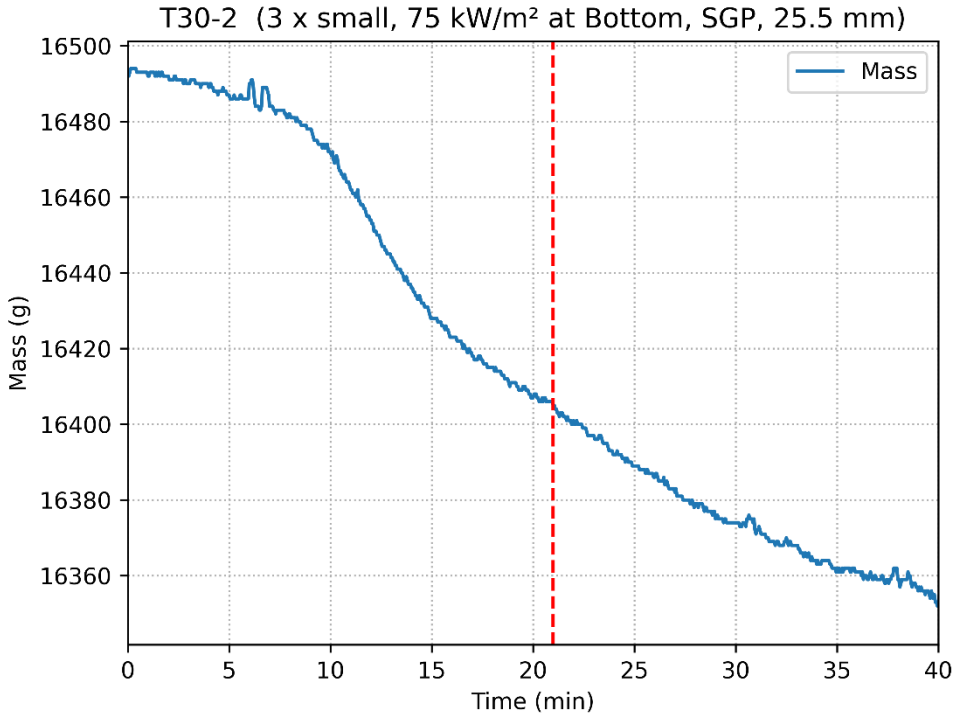
T30-2 (3 x small, 75 kW/m² at Bottom, SGP, 25.5 mm)
Mass
Mass (g)
16500
16480
16460
16440
16420
16400
16380
16360
0
5
10
15
20
25
30
35
40
Time (min)

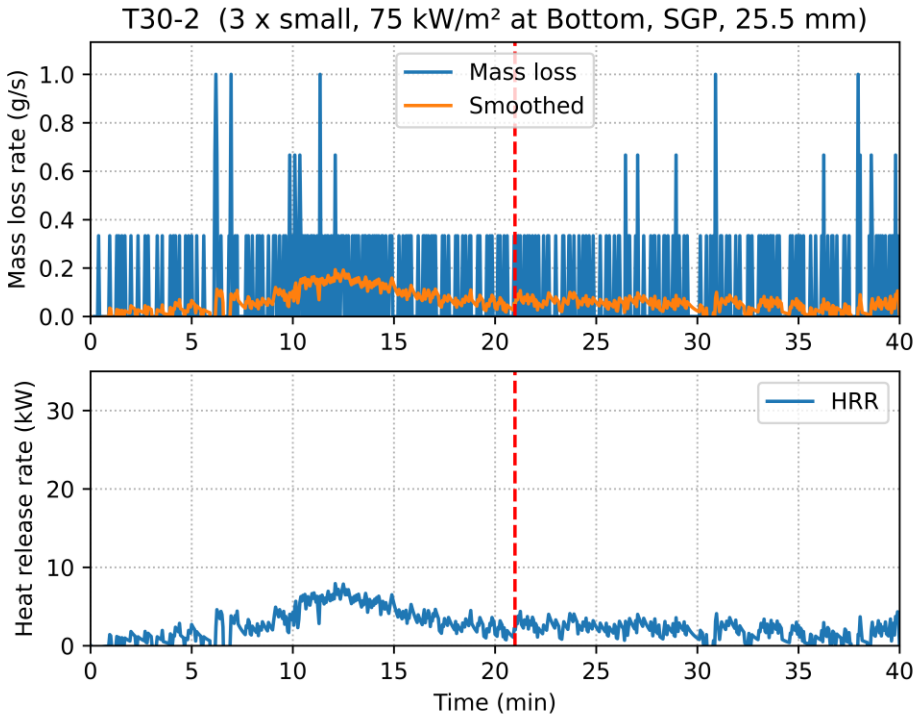
T30-2 (3 x small, 75 kW/m² at Bottom, SGP, 25.5 mm)
Mass loss
Smoothed
Mass loss rate (g/s)
1.0
0.8
0.6
0.4
0.2
0.0
HRR
Heat release rate (kW)
30
20
10
0
0
5
10
15
20
25
30
35
40
Time (min)

T30-3-B

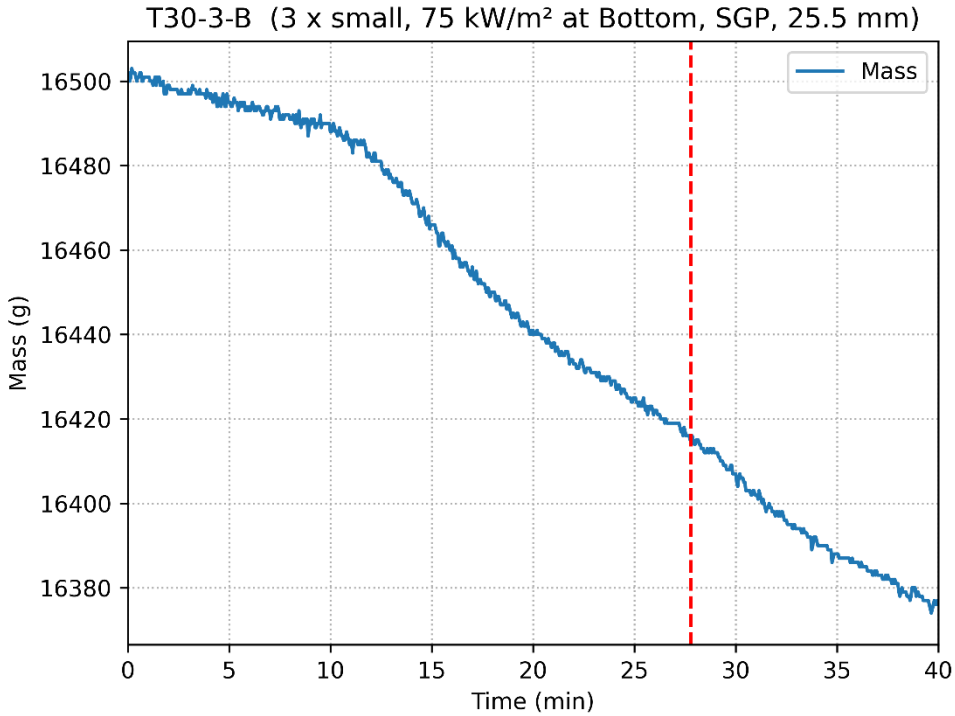
T30-3-B (3 x small, 75 kW/m² at Bottom, SGP, 25.5 mm)
Mass
Mass (g)
16500
16480
16460
16440
16420
16400
16380
0
5
10
15
20
25
30
35
40
Time (min)

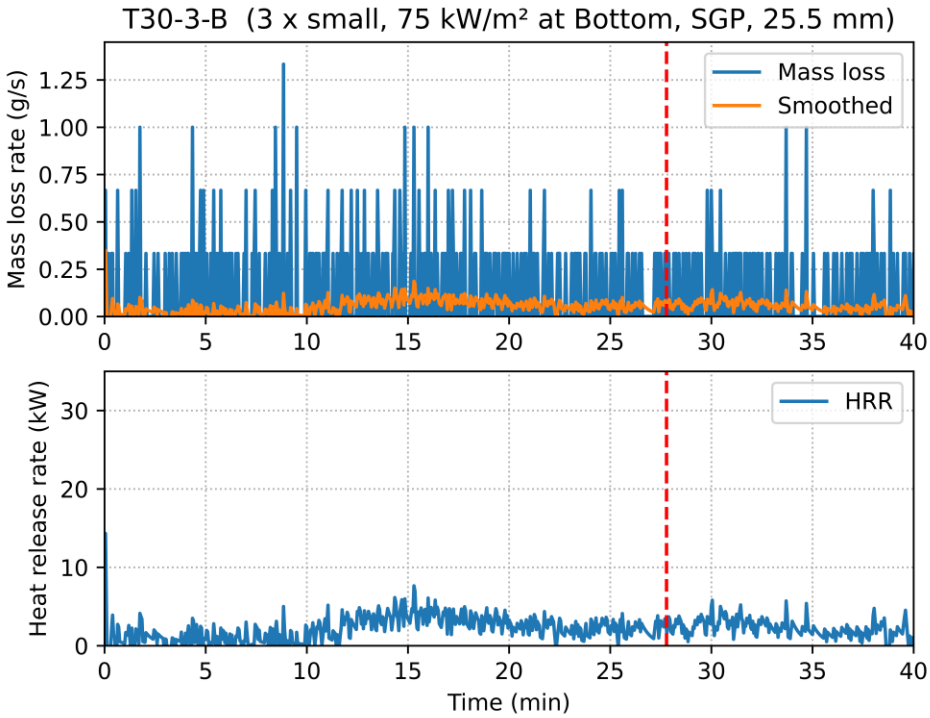
T30-3-B (3 x small, 75 kW/m² at Bottom, SGP, 25.5 mm)
Mass loss
Smoothed
Mass loss rate (g/s)
1.25
1.00
0.75
0.50
0.25
0.00
HRR
Heat release rate (kW)
30
20
10
0
0
5
10
15
20
25
30
35
40
Time (min)

T31-1

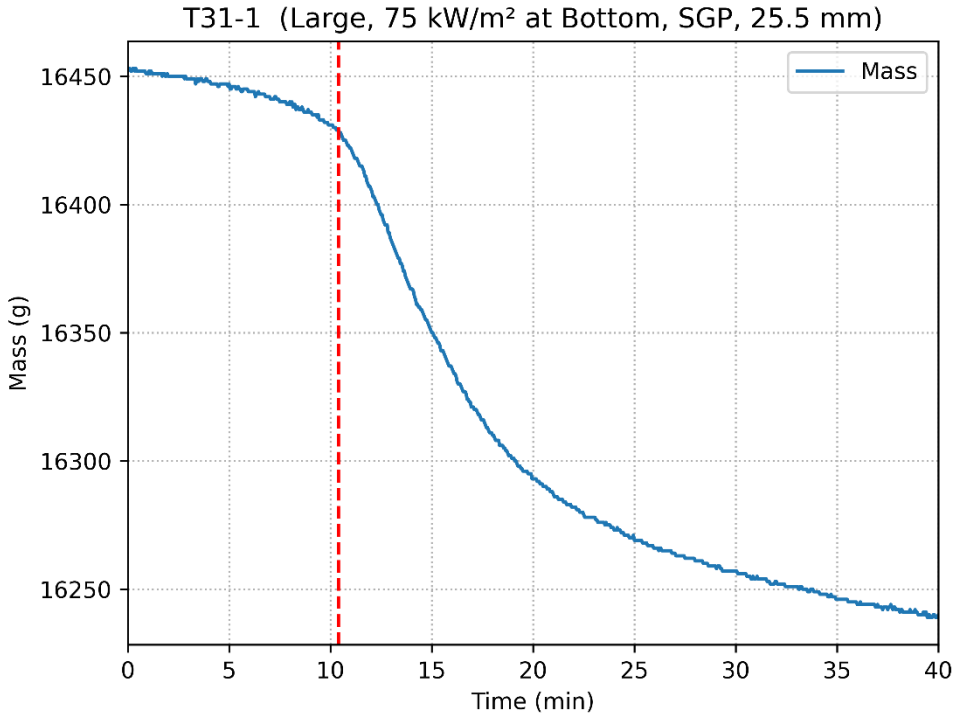
T31-1 (Large, 75 kW/m² at Bottom, SGP, 25.5 mm)
Mass
Mass (g)
16450
16400
16350
16300
16250
0
5
10
15
20
25
30
35
40
Time (min)

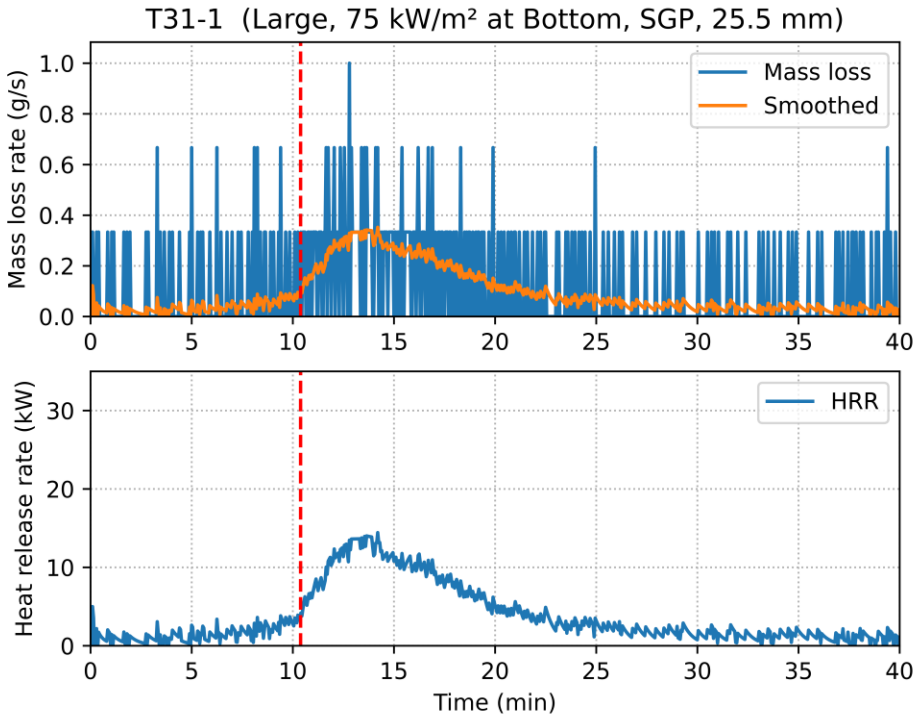
T31-1 (Large, 75 kW/m² at Bottom, SGP, 25.5 mm)
Mass loss
Smoothed
Mass loss rate (g/s)
1.0
0.8
0.6
0.4
0.2
0.0
HRR
Heat release rate (kW)
30
20
10
0
0
5
10
15
20
25
30
35
40
Time (min)

T31-2

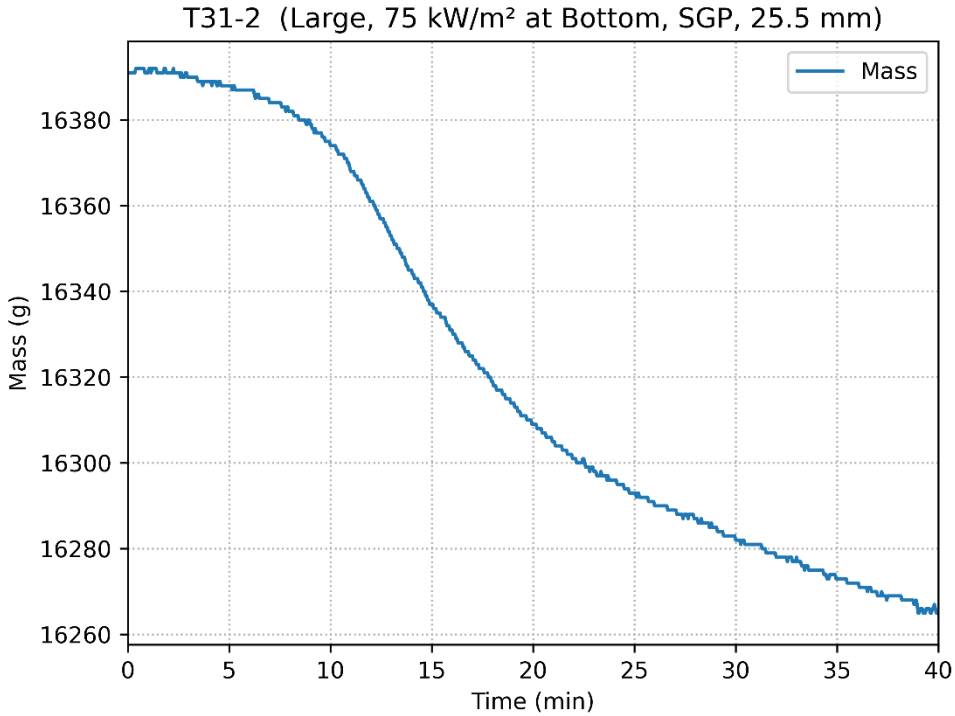
T31-2 (Large, 75 kW/m² at Bottom, SGP, 25.5 mm)
Mass
Mass (g)
16380
16360
16340
16320
16300
16280
16260
0
5
10
15
20
25
30
35
40
Time (min)

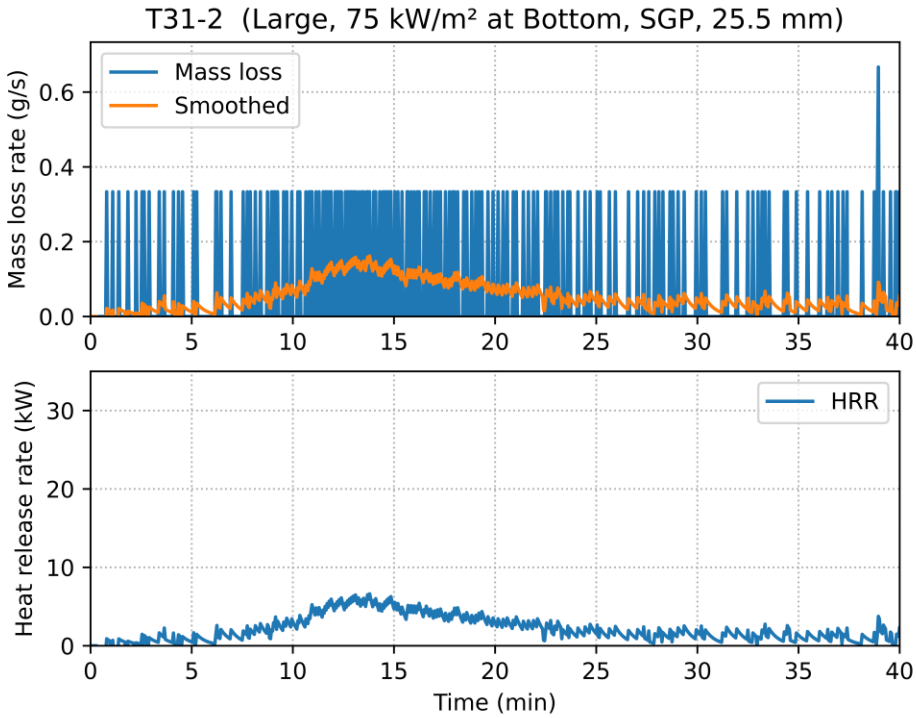
T31-2 (Large, 75 kW/m² at Bottom, SGP, 25.5 mm)
Mass loss
Smoothed
Mass loss rate (g/s)
0.6
0.4
0.2
0.0
0
5
10
15
20
25
30
35
40
HRR
Heat release rate (kW)
30
20
10
0
Time (min)

T31-3-B

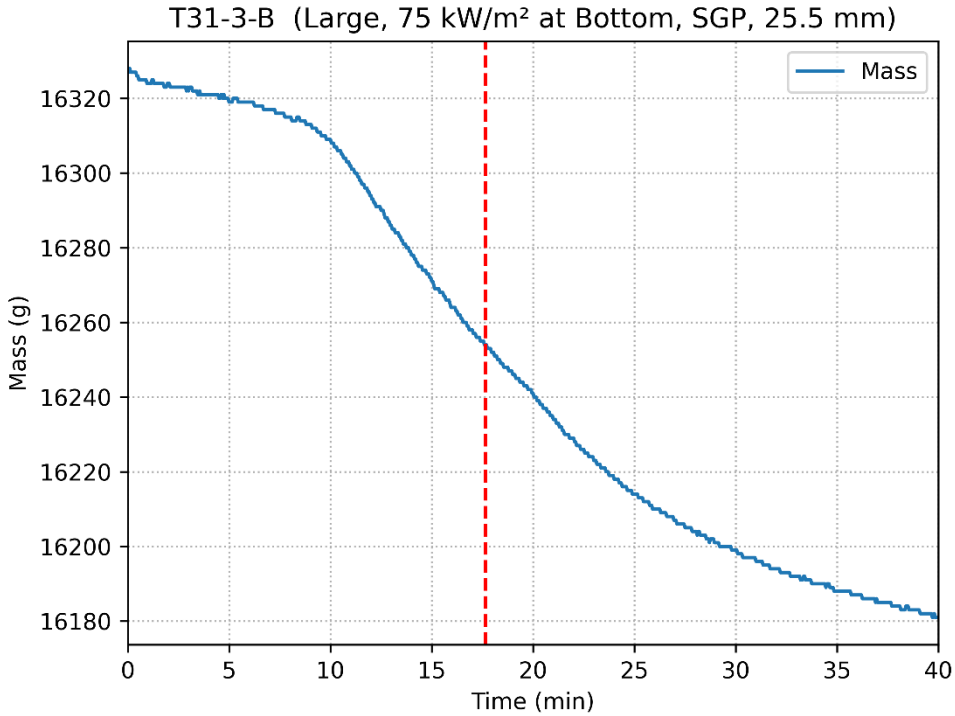
T31-3-B (Large, 75 kW/m² at Bottom, SGP, 25.5 mm)
Mass
Mass (g)
16320
16300
16280
16260
16240
16220
16200
16180
0
5
10
15
20
25
30
35
40
Time (min)

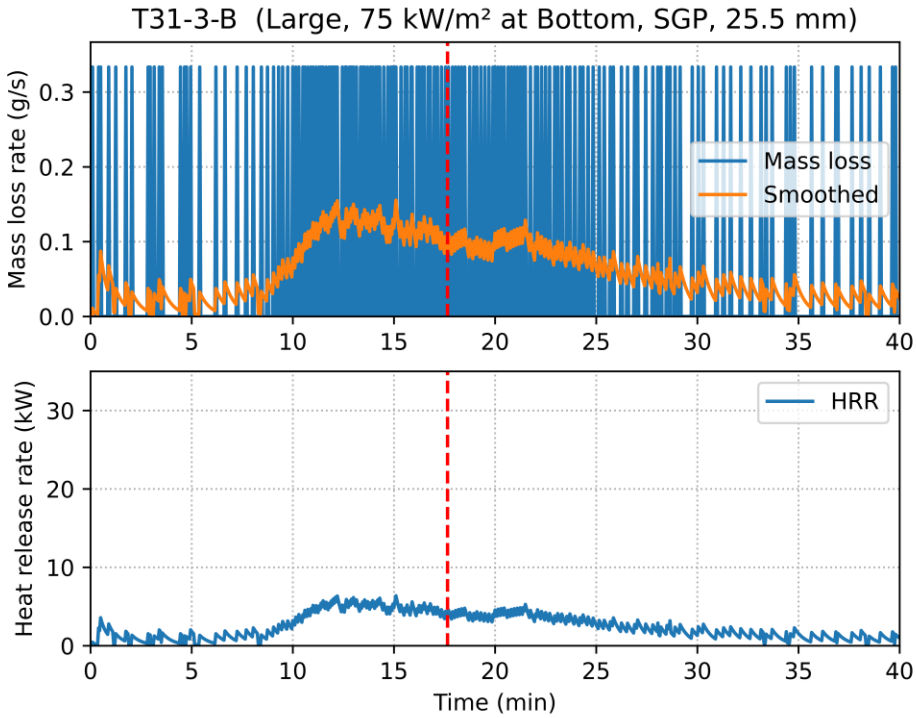
T31-3-B (Large, 75 kW/m² at Bottom, SGP, 25.5 mm)
Mass loss
Smoothed
Mass loss rate (g/s)
0.3
0.2
0.1
0.0
HRR
Heat release rate (kW)
30
20
10
0
0
5
10
15
20
25
30
35
40
Time (min)

Appendix III

This Appendix is a reproduction of the work carried out at the University of Edinburgh on behalf of the Scottish Building Standards prior to the work described in the body of this report. Some minor changes have been made to the original report for readability etc. Where practical, findings from this study were incorporated into the experiments described in this document.

Executive Summary

1. A series of exploratory fire tests have been conducted on laminated glass. The intent of these tests was to investigate the behaviour of laminated glass when subjected to heating conditions, explore the potential for fire spread, and to determine potential testing protocols for any future work that may be commissioned by government.
2. The study has been informed by previous work by OFR Consultants and has been undertaken in consultation with both OFR and Scottish Building Standards.
3. Small samples (between 300 × 300 mm and 1050 × 230 mm) of glass where heated with an incident heat flux of 50 kW/m^2 using a propane powered radiant panel array. In all cases, the polymeric (PVB) inter-layer between the glass panes was 1.0 or 1.5 mm thick.
4. Tests were conducted on either single panels of laminated glass, or on multiple panels arranged in a continuous vertical plane.
5. The exploratory nature of the study, and the non-representative configurations of the glass means that the scoping study has significant limitations. Nevertheless, several observations have been made that may prove useful in regard to considering the hazard presented by this construction product.
6. When subject to heating, the polymeric PVB inter-layer melts and pyrolyzes to form flammable gases. Once melted, the PVB can flow. In all cases, this flammable gas was observed to ignite.
7. In some configurations, dripping was observed, and a pool fire formed below the sample.
8. In most cases, when subjected to heating, glass was observed to break.
9. It was found that, in the chosen configurations, the burning of the PVB from the lower panels did not create the conditions necessary to ignite the uppermost panel.
10. Similarly, in the chosen configurations where upper panels were heated, the burning of the PVB from the upper panels did not create the conditions necessary to ignite the lower panel.
11. This pilot study suggests that the degree to which the PVB within laminated glass may promote upward and downward vertical fire spread to other laminated glass panels is limited. This suggest that, when remote from an external heat source, laminated glass many not support upward or downward vertical flame spread.

12. However, this does not mean that other configurations, glass thicknesses, or inter-layer materials may not permit such fire spread.
13. It is therefore recommended that future work should investigate the range of parameters that are of use in industrial application – to allow wider conclusions to be drawn about the degree to which laminated glass may support upward vertical flame spread.

AIII-1 Introduction

Scope

1.1 The University of Edinburgh were commissioned by Scottish Government to undertake a pilot project on the fire performance of laminated glass. The intent of the pilot review was to conduct exploratory investigations into the hazard presented by laminated glass. Specifically, the pilot project was intended to identify potential experimental arrangements that might be useful in a future, more comprehensive, study.

1.2 The project is taking place within the wider context of the DLUHC research project into laminated glass which is being led by OFR Consultants.

1.3 The exploratory study is not intended to be representative of how glass is used in a building, nor is it intended to yield definitive recommendations to inform the development of guidance. Nevertheless, it is intended that by understanding more about the hazard presented by this product category – this will help inform the direction of future work on this topic.

1.4 The University of Edinburgh's Rushbrook Fire Laboratory is not a UKAS accredited laboratory.

Objective of scoping study

1.5 The objective of this study was to investigate the behaviour of laminated glass when subjected to heating, and to determine the potential testing protocols for any future work that may be commissioned by Government.

1.6 Based on these discussions, the key parameters of interest were:

1.6.1 The degree to which changes in way in which the sample's edge was covered or restrained may affect the flow of the polymeric inter-layer – particularly in relation to spreading fire upwards or downwards;

1.6.2 The dripping and melting of the inter-layer; and

1.6.3 The configurations that may affect the degree to which adjacent panels of laminated glass may be able to spread fire to one another.

1.7 To investigate the effect of heating on the movement and burning of melted polymer, two edge conditions of interest were identified for panels of laminated glass:

1.7.1 Open – where there was no applied covering to prevent or reduce the movement of flammable vapours or fluid flow;

1.7.2 Closed – where aluminium tape, and ceramic paper were applied to prevent or reduce the movement of flammable vapours or fluid flow.

1.8 These two conditions were thought likely to represent the worst case condition in terms of: a) flames emitted from the top that may impinge on upper panes of glass; and b) production of droplets from the base of the sample.

1.9 To investigate the degree to which panels of glass might allow the spread of the fire between panels, it was identified that ‘stacking’ the panels vertically was of interest. Similarly, it was identified that larger panels of laminated glass may also be of interested – where a single panel was subject to differential heating.

Programme of work

1.10 The experimental work was commissioned in two phases. Phase 1 was undertaken in early December 2020. Phase 2 took place in late January 2021.

1.11 This report is a final report based on both Phase 1 and Phase 2.

Project Team

1.1 The project team is comprised of:

1.1.1 Dr Angus Law, Lecture in Fire Safety Engineering at the University of Edinburgh. Dr Law is a Chartered Engineer (CEng) and Member of the Institution of Fire Engineers. Dr Law supervised the experimental work and is the primary author of this report.

1.1.2 Mr David Morrisset. Mr Morrisset is a PhD student at the University of Edinburgh having gained an MSc in Fire Protection Engineering at California Polytechnic State University (USA). Mr Morrisset executed the testing programme, including sample preparation and instrument calibration.

1.1.3 Mr Hussein Mohammed. Mr Mohammed is a PhD student at the University of Edinburgh having gained an MSc in Structural Engineering at the University of Manchester. Mr Mohammed worked in the construction industry from 2016—2020 and has been involved in the delivery of many projects around Scotland. Mr Mohammed assisted Mr Morrisset with sample preparation and execution of the testing programme.

1.1.4 Dr Rory Hadden, Senior Lecturer in Fire Investigation at the University of Edinburgh. Dr Hadden undertook an internal peer review of this report.

AIII-2 Methodology

Test samples

2.1 The samples available for testing are shown in Table 1. In all cases the polymeric inter-layer was polyvinyl butyral (PVB).

Table 1 Samples available for testing during this study.

Total dimensions (width, height, thickness)	Glass thickness	Inter-layer thickness	Inter-layer material	Number of samples
300 × 300 × 11.5 mm	5 mm	1.5 mm	PVB	5
300 × 300 × 17.5 mm	8 mm	1.5 mm	PVB	11
300 × 300 × 21.5 mm	10 mm	1.5 mm	PVB	11
1050 × 230 × 21 mm	10 mm	1.0 mm	PVB	3

2.2 To avoid confusion regarding terminology, the following terms are used within this Appendix (illustrated in Figure 1):

2.2.1 Pane is used to refer to a single sheet of glass – where the front pane is closest to the radiant panel array;

2.2.2 Panel is used to refer to a single unit of laminated glass including both panes of glass, and the polymeric inter-layer;

2.2.3 Target panel is used to refer to the panel that received the maximum heat flux;

2.2.4 Panels A, B and C refer to the location of different panels (where more than one panel was tested).

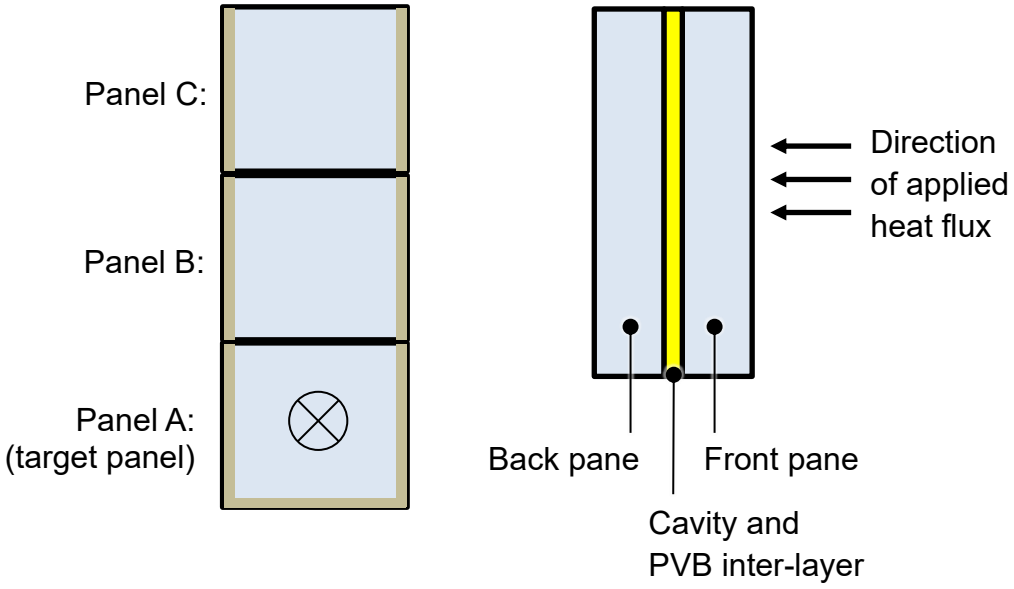

Figure 1 Terminology for testing programme

2.3 Where sample edges were 'closed', these were prepared by covering the edges with a layer of aluminium tape, ceramic paper, and another layer of aluminium tape. In all cases, the vertical edges of the samples were covered.

Test Configurations

2.4 During the pilot study, five different configurations were tested. These are illustrated in Figure 2, and were selected as follows:

2.4.1 Configuration 1A. Single panel, closed at bottom, open at top. Chosen to limit the potential for dripping, and therefore, seek to maximise the flaming from the top of the panel.

2.4.2 Configuration 1B. Single panel, open at bottom, open at top. Chosen to permit dripping from the panel.

2.4.3 Configuration 1C. Single panel, open on all edges. Chosen to permit dripping and burning at the side of the panel.

2.4.4 Configuration 2A. Three panels stacked, lowest panel was closed at the bottom, and open at the top, all other panels were open at bottom and top. Chosen with the intent of maximising flame impingement on the second panel.

2.4.5 Configuration 2B. Three panels stacked, all panels were closed at the bottom, and open at the top. Chosen to maximise with the intent of maximising flame impingement on the second panel but preventing PVB from flowing between panels. It was hypothesised that this would create a worse condition for the uppermost panel – thereby maximising the potential for fire spread.

2.4.6 Configuration 3. Continuous panel. Chosen to investigate the degree to which a single panel (as opposed to multiple panels) might be able to spread fire vertically upwards.

2.5 In most cases, the target panel was panel A or the lower part of Configuration 3. However, in some cases, the target panel was panel B and the mid-height of Configuration 3.

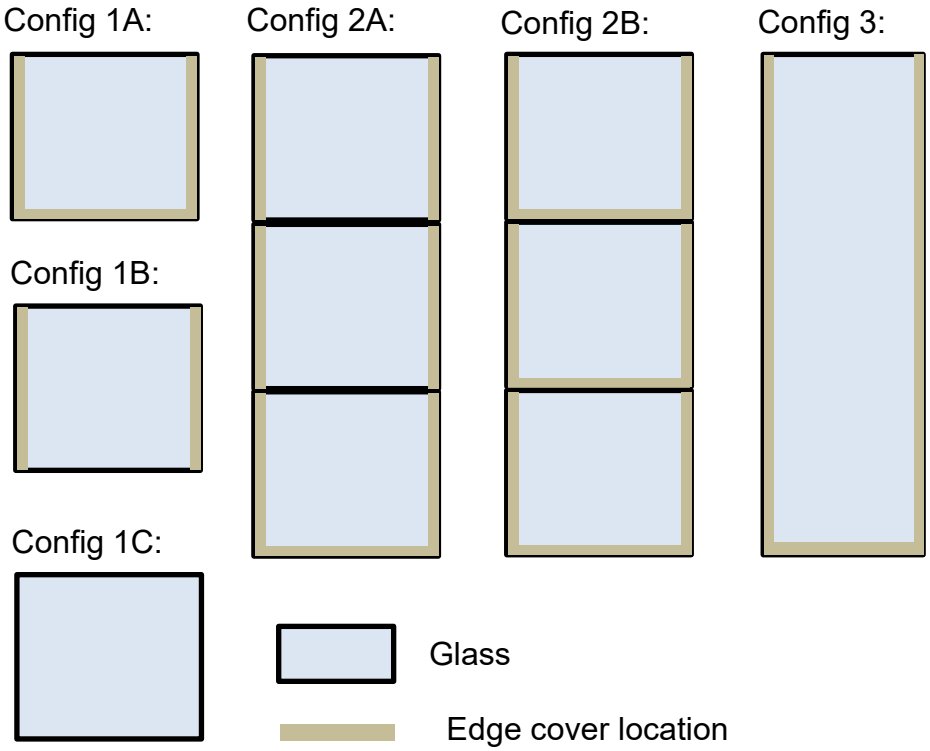

Figure 2 Configurations of laminated glass to be tested

Test apparatus

2.6 During testing, samples were held in a steel frame. The frame was designed to allow the conditions at the top and the bottom of the sample to be varied between ‘open’ and ‘closed’. The sides the sample were held in a metal slot, and ceramic paper packing was inserted to prevent contact between the frame metal and the glass – no other restraint was provided.

2.7 The frame was created such that three 300 × 300 mm samples could be stacked in a vertical plane. A frame was also created to allow a single ‘large’ panels of laminated glass to be heated.

2.8 The samples were heated with a maximum incident heat flux of 50 kW/m^2 using a radiant panel array. Where multiple samples were stacked there was a ‘target’ panel which was heated.

2.9 The decay of heat flux as a function of height is shown in Figure 4.

2.10 The overall testing configuration is shown indicatively in Figure 3.

2.11 In all cases, a pilot flame was located at the top of the target panel.

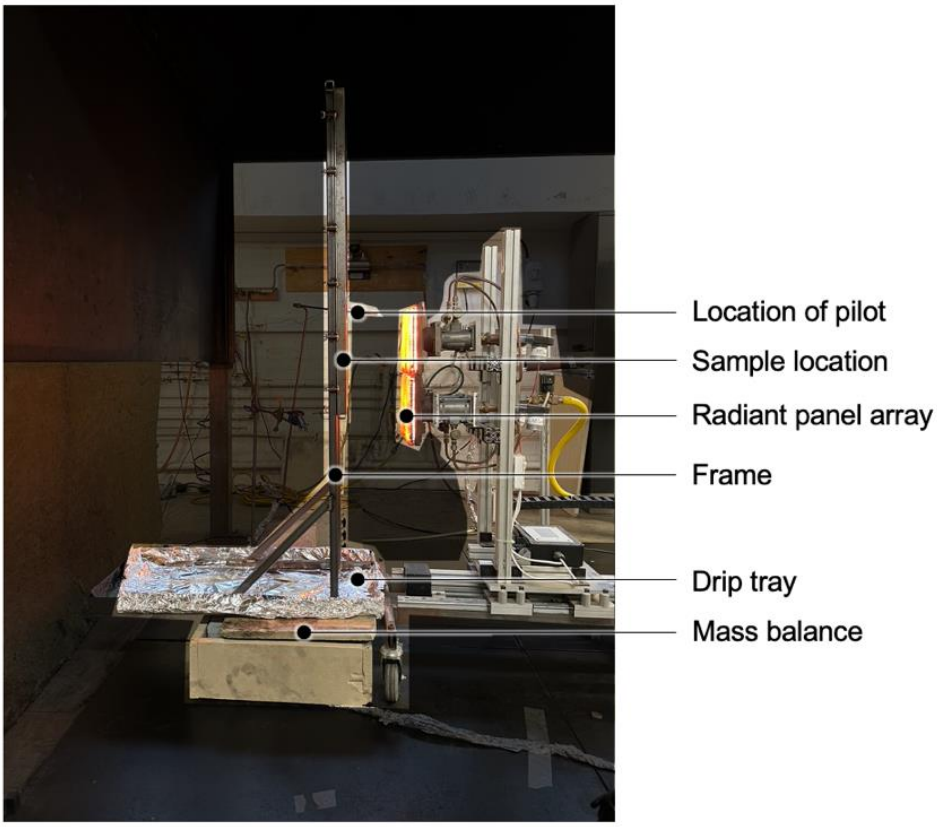

Figure 3 Frame and radiant panel array

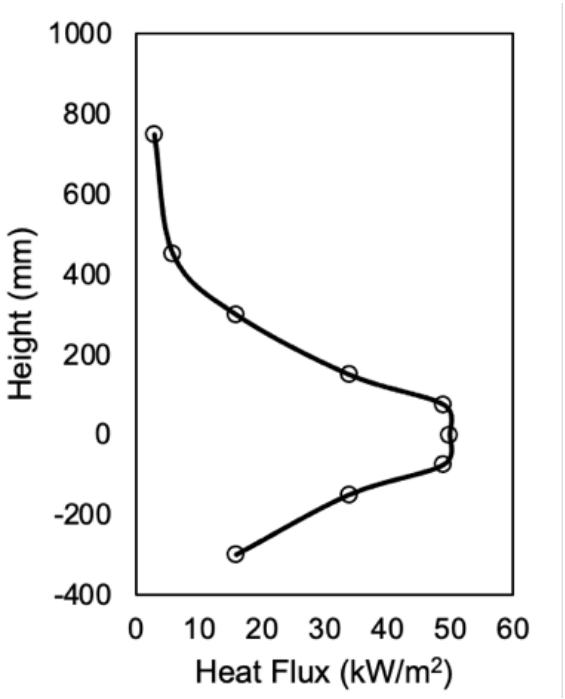

Figure 4 Mapping of heat flux on the panel centreline as a function of height (note that 0 mm is the location of the target)

Measurements

2.12 In order to gather data of relevant to fire spread, various measurements were made. These are as follows:

2.12.1 Heat release rate using oxygen depletion calorimetry – the radiant panel array and the samples were placed under a calorimeter and data were logged with a frequency of 1 Hz;

2.12.2 Sample mass – the sample frame and drip tray were placed on a mass balance and data were logged with a frequency of 10 Hz;

2.13 Visual – Visual observations were made, and the experiments were captured using two video cameras. One camera provided a view of the 'target' pane only; one camera provided an overall view of the assembly.

AIII-3 Results

3.1 The results and detailed observations for each configuration are provided in the Annex. In addition, videos of each of the configurations have been created and will be shared with SBS.

3.2 The following sections summarises the key results for all configurations.

Mobilisation of the PVB

3.3 The mobilisation of the PVB (once melted) had a significant impact on the manner in which the individual panels (and the assemblies) reacted to heating. Where the PVB was prevented from dripping out of a panel, it burned in-situ – either by flowing through the cracked glass and burning at the surface of the pane, or by burning at the unconstrained top of the sample.

3.4 Where PVB was allowed to drip or flow out of a panel, some of the PVB was observed to either drip into the tray below the frame (forming a pool fire in the case of Configuration 1B) or moved downwards in the overall assembly to burn in the void within a lower panel.

3.5 For Configuration 2A when the panel A was heated, it was observed that most of the PVB in panel B flowed into panel A, below – thus allowing burning to continue at the joint between the two panes for a prolonged period of time.

Comparative data – single panels

3.6 Key data for the single panels are provided in Table 2 and illustrated in Figure 5. Key observations from this data are:

3.6.1 Ignition consistently occurred in the range of three to five minutes, irrespective of glass breakage. Configuration 1C (total thickness, 17.5 mm) took notably longer, around eight minutes. It should be noted that the location of the pilot flame had some influence on the time to ignition (i.e., a flammable mixture was required at the pilot for ignition to occur);

3.6.2 Glass breakage was variable with Configuration 1A breaking at around three minutes, Configurations 1B and 1C (total thickness, 17.5 mm) broke after around 17 min. In the case of Configuration 1C (total thickness, 11.5 mm) the glass did not break;

3.6.3 Configuration 1C (total thickness, 11.5 mm) had the highest peak heat release rate (22.4 kW) and mass loss rate (0.85 g/s).

Table 2 Comparative data from each test – it should be noted that the total mass loss rate includes glass that fell away from the mass balance.

	Time to ignition	Glass breakage	Peak HRR	Peak MLR	Total ML
	[s]	[s]	[kW]	[g/s]	[g]
Configuration 1A (17.5 mm)	248	197	7.22	0.37	156.32
Configuration 1B (17.5 mm)	284	1017	13.00	0.63	153.77
Configuration 1C (17.5 mm)	499	1079	9.15	0.41	228.12
Configuration 1C (11.5 mm)	201	N/A	22.39	0.85	181.84

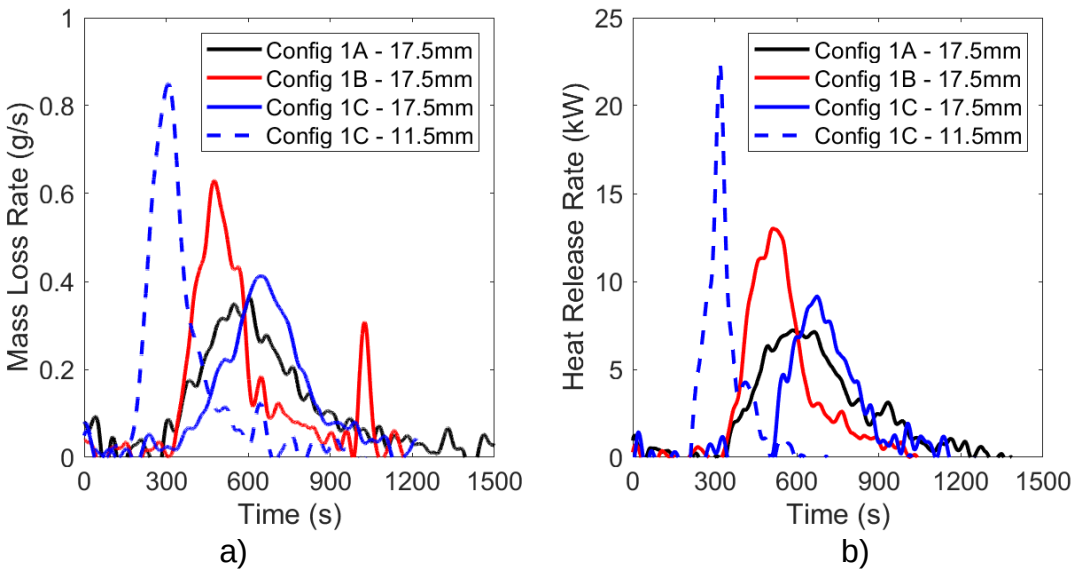

Figure 5 Data for single panels, a) mass loss rate; b) heat release rate

Stacked and tall panels – heated at location of Panel A

3.7 Key data for the stacked panels where the target location was at the base are provided in Table 3 and illustrated in Figure 6. Configuration 3 (a single tall panel) is also provided with this data. Key observations from this data are:

3.7.1 Ignition consistently occurred in the range of three to six minutes. Configuration 2A with the thinner (11.5 mm) panel ignited notably earlier than the other tests. It should be noted that the location of the pilot had some influence on the time to ignition.

3.7.2 Glass breakage occurred in all cases prior to ignition.

3.7.3 Configuration 2A had the highest heat release rate with the 11.5 mm panels giving 9.60 kW, and the 17.5 mm panels giving 11.35 kW.

Table 3 Comparative data from each test – it should be noted that the total mass loss rate includes glass that fell away from the mass balance.

	Time to ignition	Time to glass breakage	Peak HRR	Peak MLR	Total ML
	[s]	[s]	[kW]	[g/s]	[g]
Configuration 2A (11.5 mm)	219	143	9.60	0.45	212.08
Configuration 2A (17.5 mm)	312	245	11.35	0.45	238.45
Configuration 2A (21.5 mm)	388	309	6.60	0.21	204.48
Configuration 2B	378	171	9.38	0.33	214.90
Configuration 3	347	289	7.67	0.38	171.93

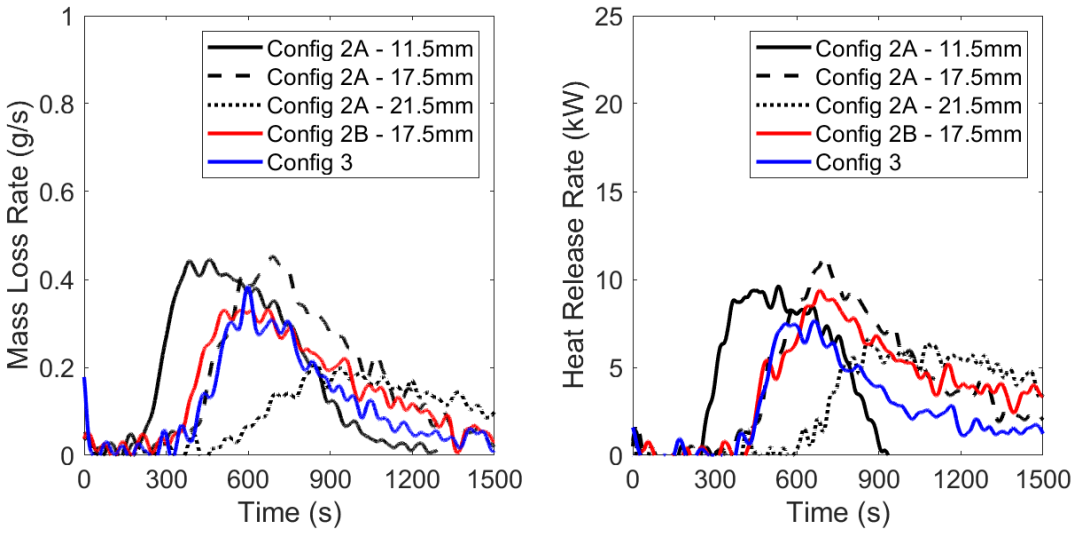

a) b)

Figure 6 Data for stacked/tall panels, Configurations 2A, 2B and 3, a) mass loss rate; b) heat release rate

Stacked panels – heated in middle

3.8 Key data for the stacked panels where the target location was in the middle are provided in Table 4 and illustrated in Figure 7. Key observations from this data are:

3.8.1 Ignition consistently occurred after around 5 min.

3.8.2 Glass breakage occurred in all cases prior to ignition.

3.8.3 In Configuration 2A, there was some damage to the lower panel, and bubbles were observed in the PVB with dripping material over the face of

the panel – however, fire did not spread vertically downwards to the bottom of this panel.

3.8.4 In Configuration 3, the entire front pane of glass shattered, however, fire did not spread to the bottom of the panel.

Table 4 Comparative data from each test

	Time to ignition	Glass breakage	Peak HRR	Peak MLR	Total ML
	[s]	[s]	[kW]	[g/s]	[g]
Configuration 2A (21.5 mm)	316	N/A	14.36	0.46	222.35
Configuration 3	370	323	8.85	0.39	180.18

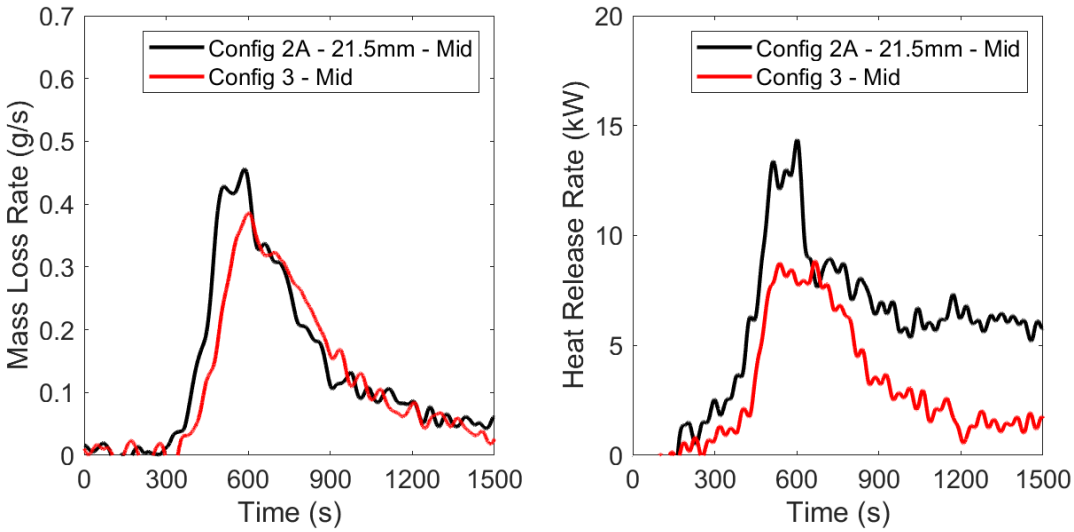

a) b)

Figure 7 Data for stacked/tall panels, Configurations 2A and 3, a) mass loss rate; b) heat release rate

Fire spread upwards

3.9 The stacked configurations with the target at the base were intended to allow upward propagation of the fire. However, in no cases was ignition of the uppermost panel observed. Flaming was observed to be anchored in the location of the joint between panels A and B.

3.10 Following the test on Configuration 2A, it was hypothesised that the downward mobilisation of the PVB created favourable conditions for panel C (since the PVB was burning at a location that was relatively remote from the top panel). Therefore, Configuration 2B was intended to prevent the downward mobilisation of the PVB panel B – thereby allowing the PVB from panel B to burn in closer proximity to panel C.

3.11 However, the results (Table 5) show that panel C lost less mass in Configuration 2B than in Configuration 2A. This suggests that Configuration 2A was, in fact, a worse case for Panel C.

3.12 Three different thicknesses of panel were tested in Configuration 2A. It was found that the 11.5 mm and 17.5 mm thick panels behaved relatively similarly compared to the 21.5 mm thick panels which had a lower heat release rate and lost less mass in the upper panels.

3.13 The damaged panels are illustrated in Figure 8.

Table 5 Residual mass from Configuration 2A and 2B

Configuration	Panel	Mass loss (g)
2A (11.5 mm)	Panel B	103
	Panel C	14
2A (17.5 mm)	Panel B	102
	Panel C	28
2A (21.5 mm)	Panel B	67
	Panel C	3
2B	Panel B	70
	Panel C	0

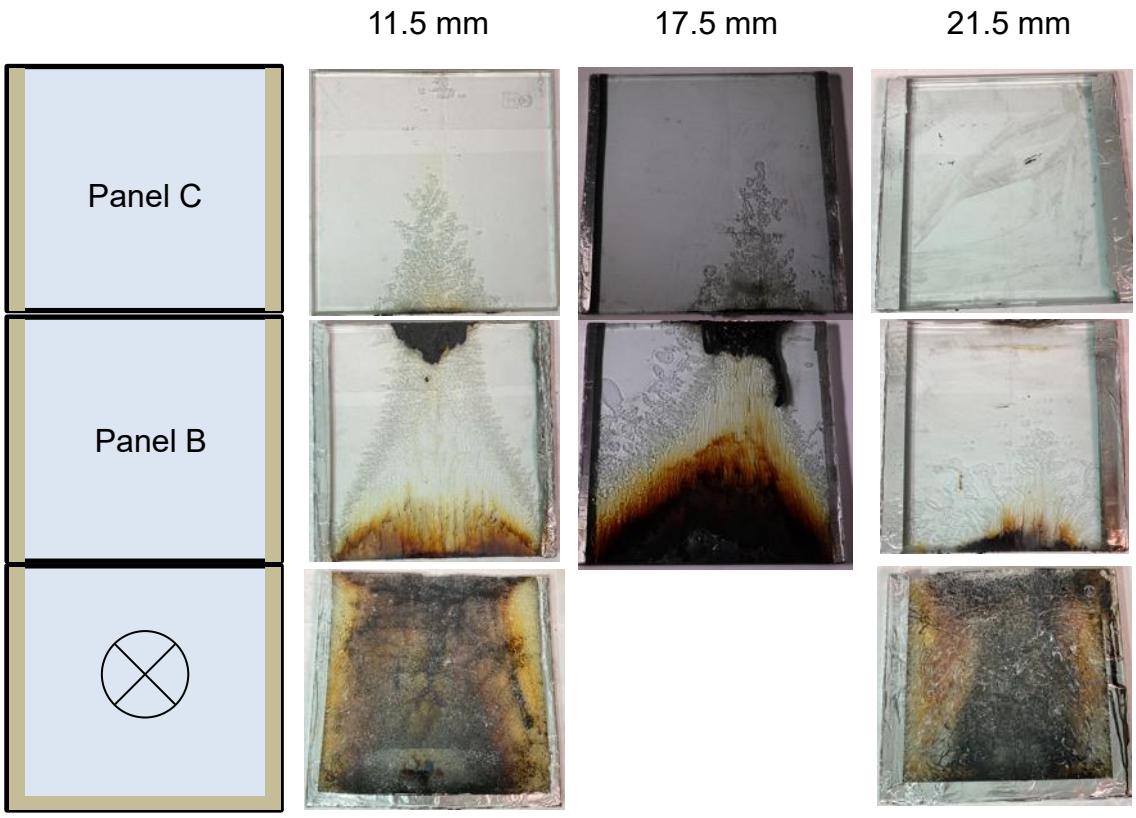

Figure 8 Damaged panels for after testing. There is notably less damage on the 21.5 mm thick panels. For Panel A in the 17.5 mm configuration, the lower panel broke apart on removal for the rig so was not photographed

Fire spread downward

3.14 The stacked configurations with the target in the middle were intended to investigate downward propagation of the fire.

3.15 The pane immediately below the heated area was damaged, and dripping and flowing material was observed on the face of panels in both tests. A mass loss of 77 g from panel A in Configuration 2A indicates that some melting or pyrolysis of the PVB in this panel did occur. However, in the two configurations tested, downward fire spread (beyond the base of the Panel A) did not occur.

3.16 It was notable that, remote from the radiant panel array, the melted material on the surface of the panels did not sustain flaming.

AIII-4 Conclusions

4.1 When heat was applied to the base of the chosen configurations, the burning of the lower panels (A and B) did not release sufficient energy to ignite the uppermost panel (C). This suggests that the degree to which the inter-layer within the laminated glass may promote upward vertical fire spread to other laminated glass panels is limited. However, this does not mean that other configurations, glass thicknesses, or inter-layer materials may not permit such fire spread.

4.2 The pilot study has shown that the flowing of the polymer inter-layer has a significant impact on the fire behaviour. When heat was applied to the middle of the chosen configurations, the melting and dripping of burning polymer was insufficient to spread fire downwards to the bottom of the experimental apparatus. The burning remained localised around the location of maximum applied heat flux.

4.3 The panel with thinner glass had a higher heat release rate when tested individually. However, when tested as part of an overall assembly its behaviour was similar to that of panels with other glass thicknesses. The panel with the thickest glass exhibited the lowest heat release rate.

4.4 The most significant difference between panels with different glass thicknesses was that, remote from the applied heat flux, thickest panels lost the least mass. This suggests that the thermal mass of the glass plays a significant role in preventing (or delaying) the melting and pyrolysis of the PVB inter-layer.

4.5 In relation to the future DLUHC/OFR work it is recommended that a more extensive study should explore a wider range of product parameters than was possible in this study. For example, inter-layer thickness, inter-layer material, and glass thickness.

4.6 In addition, it is recommended that further attention should be given to whether the configuration piloted in this study represents a worst case. It is possible that other configurations, which promote the burning and flowing of the inter-layer may present a worse case for fire spread.

4.7 Similarly, it is recommended that the sensitivity of results to the heating condition should also be investigated.

4.8 It is suggested that if the range of relevant parameters (e.g., glass thickness, inter-layer thickness, inter-layer material) are defined and assembled in a worst-case condition, this would allow an experimental matrix to be developed that could allow the critical thresholds for fire spread to be identified.

Annex Complete Results

Configuration 1A – Single panel, open top

5.1 During the test it was observed that:

5.1.1 At around 2 min, bubbles began to form in the PVB inter-layer;

5.1.2 By 3 min the bubbles in the inter-layer had grown in size and extent so that they were visible across most of the sample;

5.1.3 At 3 min 17 s, the front pane of glass shattered;

5.1.4 At 4 min 8 s ignition occurred;

5.1.5 By 8 min, flames were present across most of the top of the sample and intermittent flames were reaching the top of the frame (Figure 9);

5.1.6 By 24 min, flames were present locally at the edge of the sample.

5.1.7 At 25 min, end test.

5.2 During the test it was observed that the PVB inter-layer melted and was retained in as liquid in the cavity. It was observed to bubble until there was no residual PVB left within the cavity. This is illustrated in Figure 10.

5.3 Figure 11 shows the mass loss rate and heat release rate data for Configuration 1A.

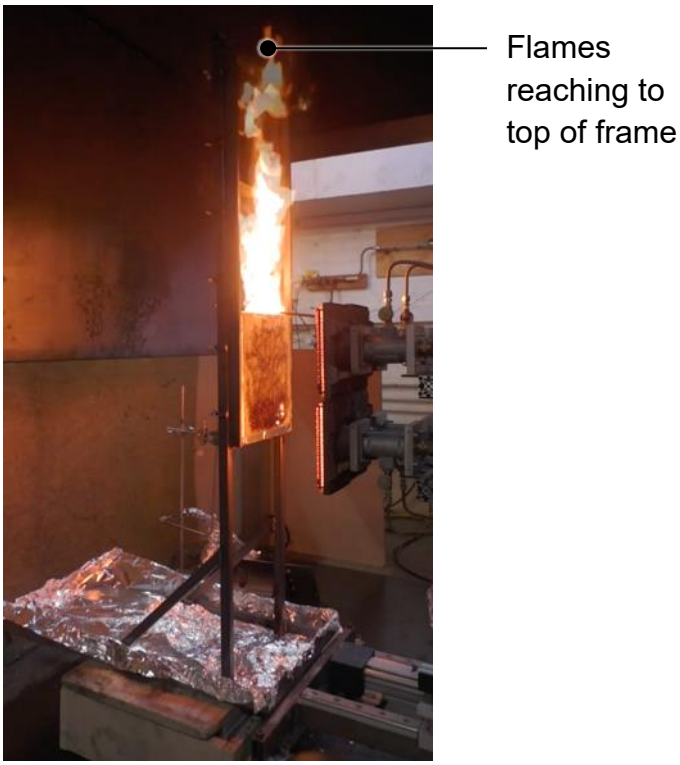

Figure 9 Flames reaching top of frame at around 9 min 30 s

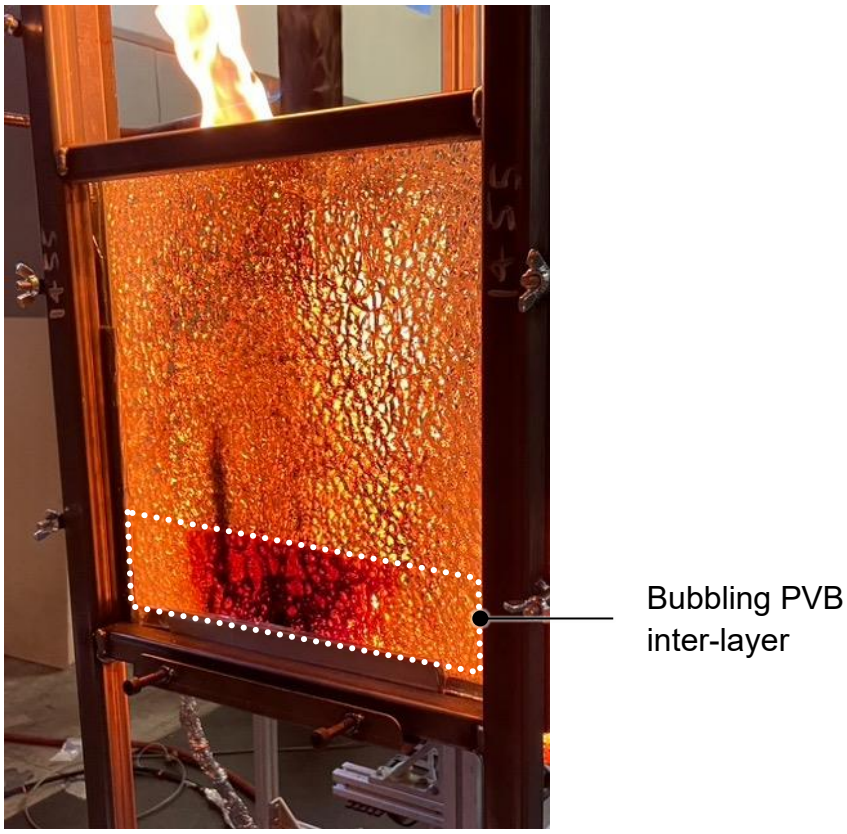

Figure 10 Bubbling PVB contained at the base of the cavity between the two panes

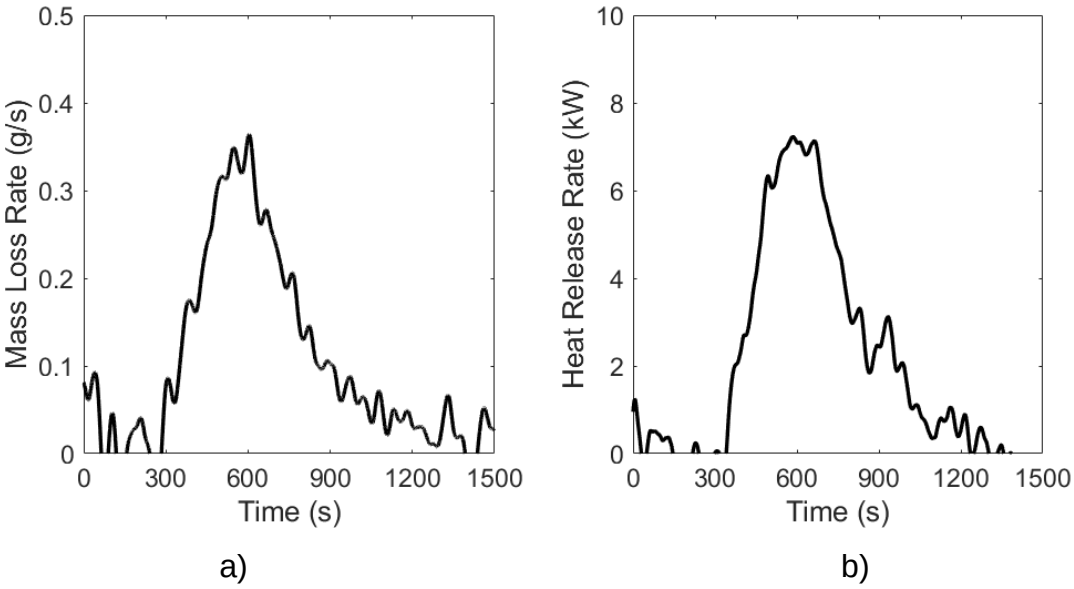

Figure 11 Data for Configuration 1A a) mass loss rate; b) heat release rate

Configuration 1B – Single panel, open top and bottom

5.4 During the test it was observed that:

5.4.1 At around 2 min, bubbles began to form in the PVB inter-layer;

5.4.2 By 3 min the bubbles in the inter-layer had grown in size and extent so that they were visible across most of the sample;

5.4.3 At 3 min, pyrolysis gas began emerging from the base of the sample;

5.4.4 At around 3 min 30 s, pyrolysis gas began emerging from the top of the sample;

5.4.5 At 4 min 44 s, ignition occurred at the top of the sample;

5.4.6 By 6 min, flames were present across most of the top of the sample;

5.4.7 At 6 min 21 s, ignition occurred at the bottom of the sample;

5.4.8 At 6 min 23 s, burning droplets began to fall from the base of the sample and started to burn in a pool fire on the drip tray below the sample (pool fire illustrated in Figure 11);

5.4.9 At 9 min 42 s, production of burning droplets ceased;

5.4.10 At 9 min 49 s, the pool fire in the drip tray ceases burning;

5.4.11 At 16 min 57 s, the back pane of glass shattered and remains in-situ;

5.4.12 At 20 min, flaming is localised to flamelets at corners of glass;

5.4.13 End test at 20 min.

5.5 Figure 12 shows the mass loss rate and heat release rate data for Configuration 1B.

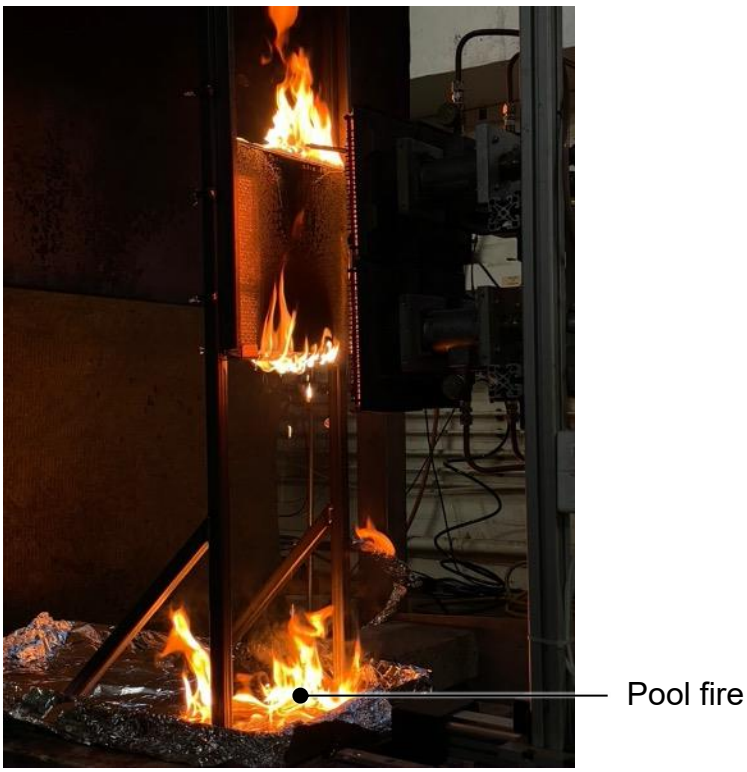

Figure 11 Pool fire due to dripping of burning droplets

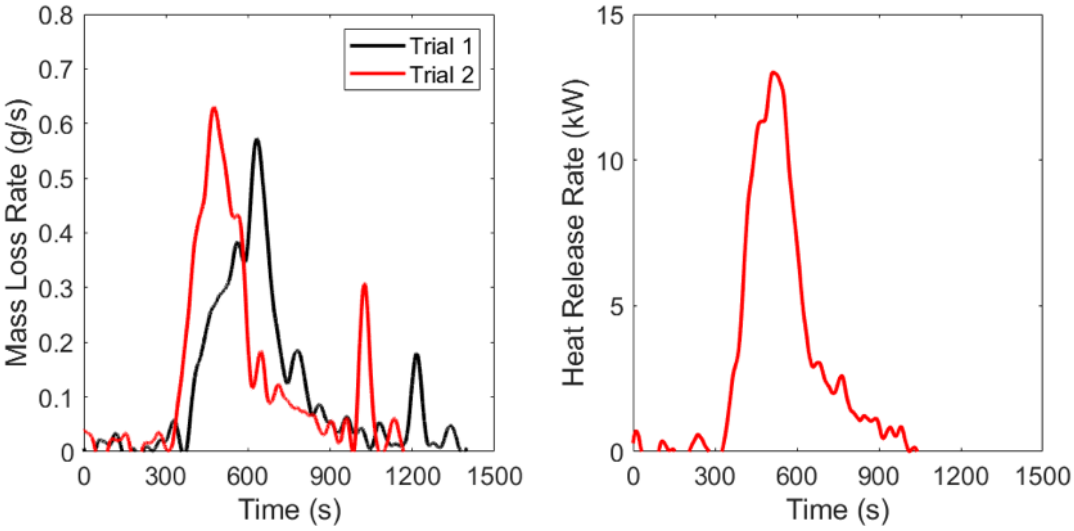

a) b)

Figure 12 Data for Configuration 1B a) mass loss rate; b) heat release rate. Note that this test was repeated due to failure of the heat release rate logging equipment. Both tests recorded mass loss rate, and this data is provided in a) for completeness

Configuration 1C – Single panel, open at the top, bottom and sides

5.6 Two tests were conducted, one on a 11.5 mm thick panel, and one on a 17.5 mm thick panel.

5.7 During the test on the 11.5 mm panel, it was observed that:

5.7.1 At around 55 s, bubbles began to form in the PVB inter-layer;

5.7.2 At 1 min 22 s, pyrolysis gas began emerging from the base of the sample;

5.7.3 By 2 min the bubbles in the inter-layer had grown in size and extent so that they were visible across most of the sample;

5.7.4 At 3 min 21 s, ignition occurred at the bottom of the sample – it appears that the pilot for the ignition may have been contact between pyrolysis gas and the radiant panel;

5.7.5 By 3 min 22 s, droplet production began;

5.7.6 At 4 min 24 s, ignition occurred at the top of the sample;

5.7.7 At around 6 min melting flowing material dripped down the testing apparatus;

5.7.8 By around 6 min 20s droplet production ceased;

5.7.9 At 17 min, flaming is localised to flamelets at corners of glass;

5.7.10 End test at 17 min 12 s.

5.8 During the test on the 11.5 mm panel, it was observed that:

5.8.1 At 2 min 14 s, bubbles began to form in the PVB inter-layer;

5.8.2 At around 2 min 50 s, pyrolysis gas began emerging from the base of the sample;

5.8.3 By 5 min, the bubbles in the inter-layer had grown in size and extent so that they were visible across most of the sample;

5.8.4 At 6 min dripping of the PVB inter-layer commenced;

5.8.5 At 8 min 19 s, ignition occurred at the bottom of the sample;

5.8.6 At 8 min 20 s, flaming droplet production began;

5.8.7 At 13 min 4 s, flaming droplet production ceased;

5.8.8 At 17 min 59s, the from pane of glass shattered;

5.8.9 At 20 min, there was localised flamelets at the top of the panel;

5.8.10 End test at 20 min.

5.9 Figure 15 shows the mass loss rate and heat release rate data for Configuration 1C.

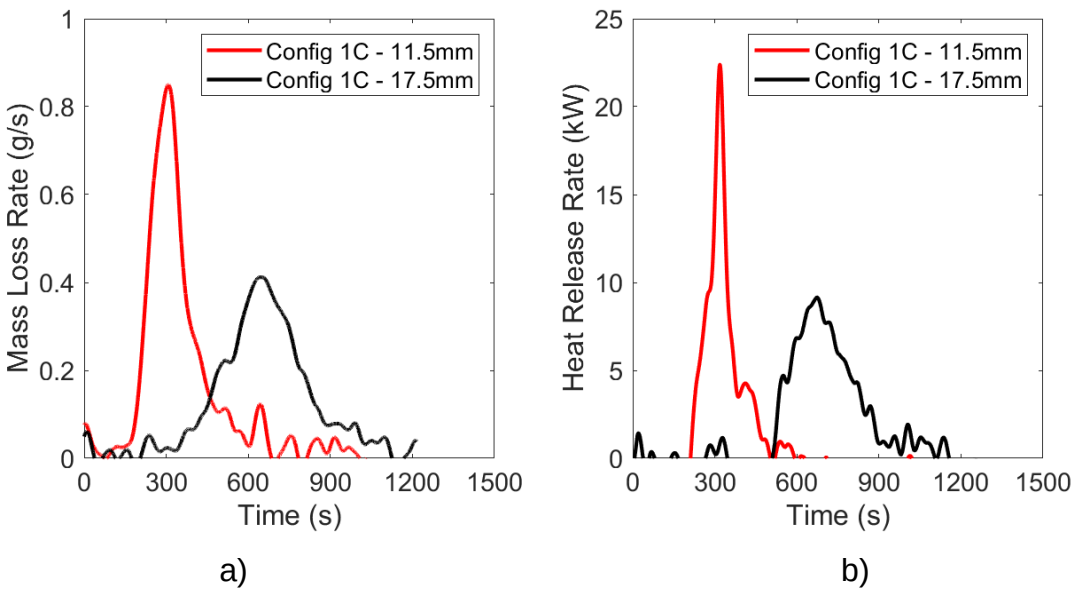

Figure 13 Data for Configuration 1C a) mass loss rate; b) heat release rate

Configuration 2A – Three stacked panels, target panel closed at bottom

5.10 Three tests were conducted on stacks where the panels were 11.5 mm thick, 17.5 mm thick, and 21.5 mm thick respectively.

5.11 During the test on the 11.5 mm panels, it was observed that:

5.11.1 At around 1 min 10 s, bubbles began to form in the PVB inter-layer of panel A;

5.11.2 By 2 min 20 s, the bubbles in the inter-layer had grown in size and extent so that they were visible across most of panel A;

5.11.3 At 2 min 23 s, the front pane of panel A shattered;

5.11.4 From 2 min 45 s, pyrolysis gas began to emerge from the top of panel A;

5.11.5 At 3 min 39 s, ignition occurred at the top of panel A;

5.11.6 At 20 min, test was terminated.

5.12 During the test on the 17.5 mm panels, it was observed that:

5.12.1 At around 2 min 20 s, bubbles began to form in the PVB inter-layer of panel A;

5.12.2 At around 2 min 38 s, bubbles began to form in the PVB inter-layer in panel B;

5.12.3 By 3 min the bubbles in the inter-layer had grown in size and extent so that they were visible across most of panel A;

5.12.4 At 3 min 19 s pyrolysis gas started to emerge from the top of panel A;

5.12.5 At 4 min 5 s the front pane of panel A shattered;

5.12.6 At 5 min 12 s, the ignition occurred at the top of panel A;

5.12.7 Between around 5 min 20 s and 9 min flaming became established and grew on the glass surface of panel A;

5.12.8 At around 8 min and 30 s intermittent flaming reached the top of panel C;

5.12.9 At around 12 min melted PVB was visible on the front of the glass between panels B and C;

5.12.10 By around 22 mins, the intermittent flaming region had reduced in height to below the top of panel B.

5.12.11 At 30 minutes, test was terminated.

5.13 During the test on the 21.5 mm panels, it was observed that:

5.13.1 At around 2 min 30 s, bubbles began to form in the PVB inter-layer of panel A;

5.13.2 By 5 min the bubbles in the inter-layer had grown in size and extent so that they were visible across most of panel A;

5.13.3 At 5 min 9 s the front pane of panel A shattered;

5.13.4 At 5 min 15 s pyrolysis gas started to emerge from the top of panel A;

5.13.5 At 6 min 28 s, the ignition occurred at the top of panel A – however, it should be noted that this was coincident with manual re-ignition of the pilot (which had extinguished);

5.13.6 Flaming continued for until 60 minutes at which time the test was terminated.

5.14 During the test on Configuration 2A, it was observed that the PVB from panel B melted and flowed into the cavity between the two glass panes in panel A.

5.15 Figure 15 shows the mass loss rate and heat release rate data for each for each of the panel thicknesses tested in Configuration 2A.

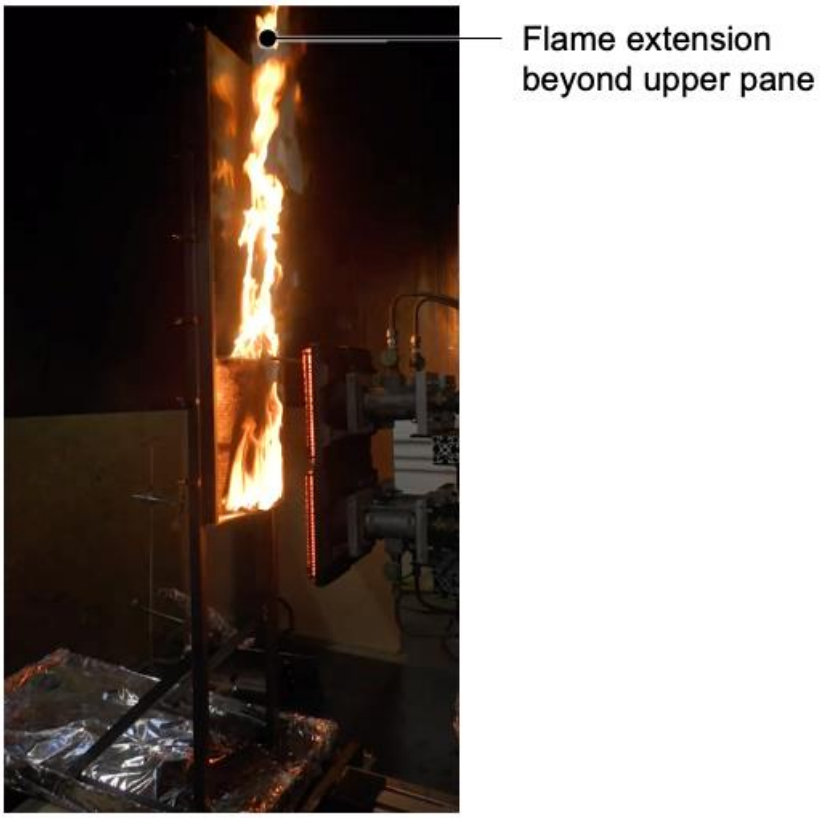

Figure 14 Flames reach top of uppermost pane

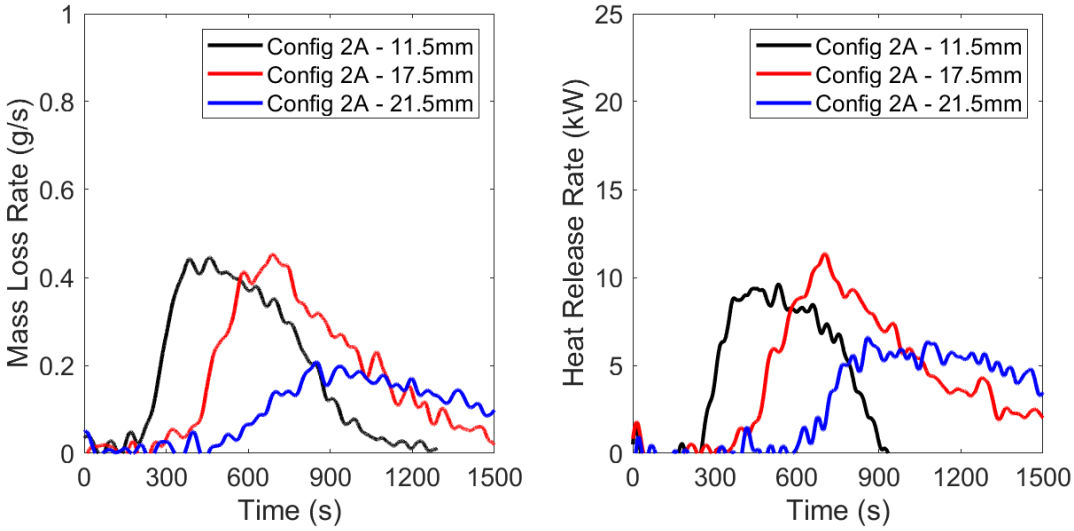

a) b)

Figure 15 Data for Configuration 2A a) mass loss rate; b) heat release rate

Configuration 2B – Three stacked panels, each panel closed at bottom

5.16 During the test it was observed that:

5.16.1 At around 2 min, 5 s bubbles began to form in the PVB inter-layer;

5.16.2 At around 2 min 51 s, the front pane of panel A shattered;

5.16.3 By 3 min the bubbles in the inter-layer had grown in size and extent so that they were visible across most of Panel A;

5.16.4 At 6 min 18 s ignition occurred at the top of Panel A;

5.16.5 By 6 min 30 s, flames were present across most of the top of Panel A;

5.16.6 By 12 min, intermittent flaming was present at the top of Panel C;

5.16.7 At 30 min, end test.

5.17 Panels B and C were photographed and weighed after removal from the apparatus – this is shown in Figure 16.

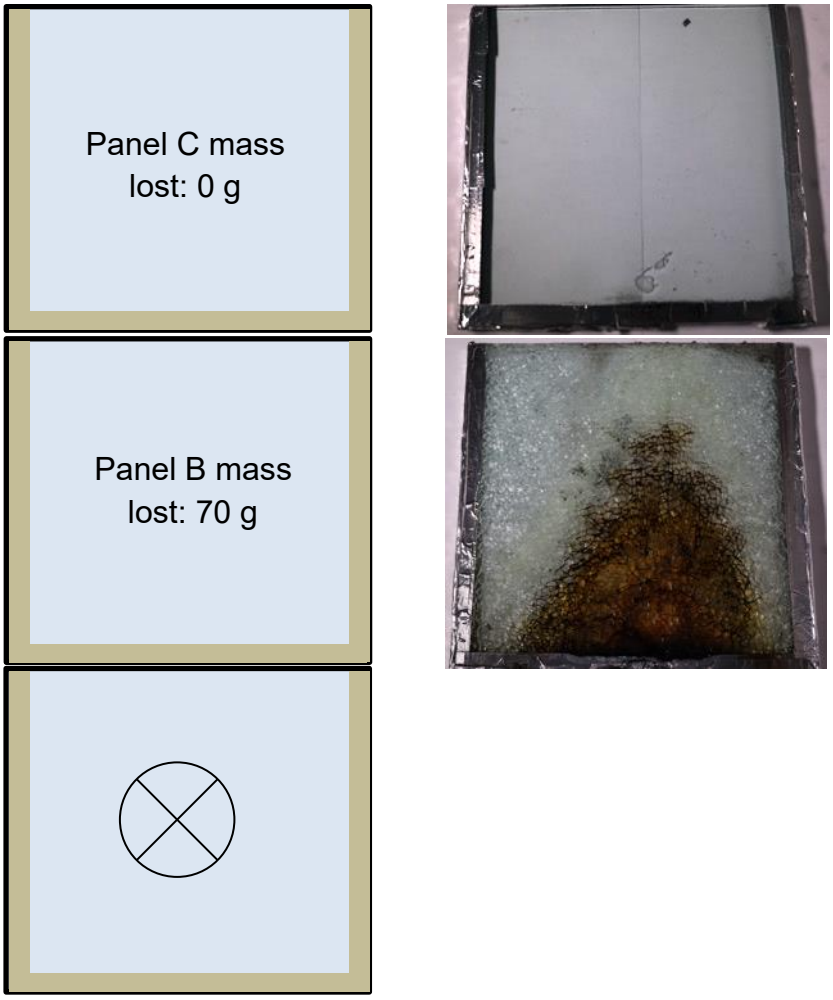

Figure 16 Damage to upper two panels

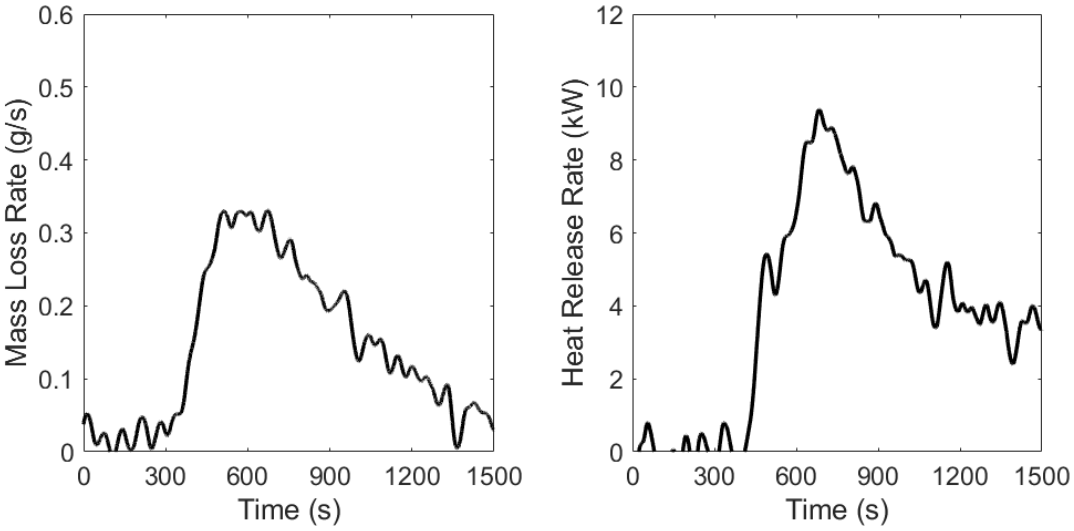

a) b)

Figure 17 Data for Configuration 2B a) mass loss rate; b) heat release rate

Configuration 3 – Single large pane, closed at bottom

5.18 During the test it was observed that:

5.18.1 At around 1 min 30 s, bubbles began to form in the PVB inter-layer;

5.18.2 By 4 the bubbles in the inter-layer had grown in size and extent so that they were visible across most of the lower third of the sample;

5.18.3 At 4 min 49 s, the front pane of glass shattered;

5.18.4 At 5 min 47 s, ignition occurred and the flame attached to the front surface of the glass;

5.18.5 By 10 min, the top of the intermittent flame was observed to reach the top of the frame;

5.18.6 By 20 min, flaming was localised to the region around the radiant panel array.

5.18.7 At 38 min, end test.

5.19 At the end of the test, the damaged pane was removed and photographed (Figure 18)

Figure 18 Damage to pane (note isometric view)

Figure 19 Image of Configuration 3, at 10 min

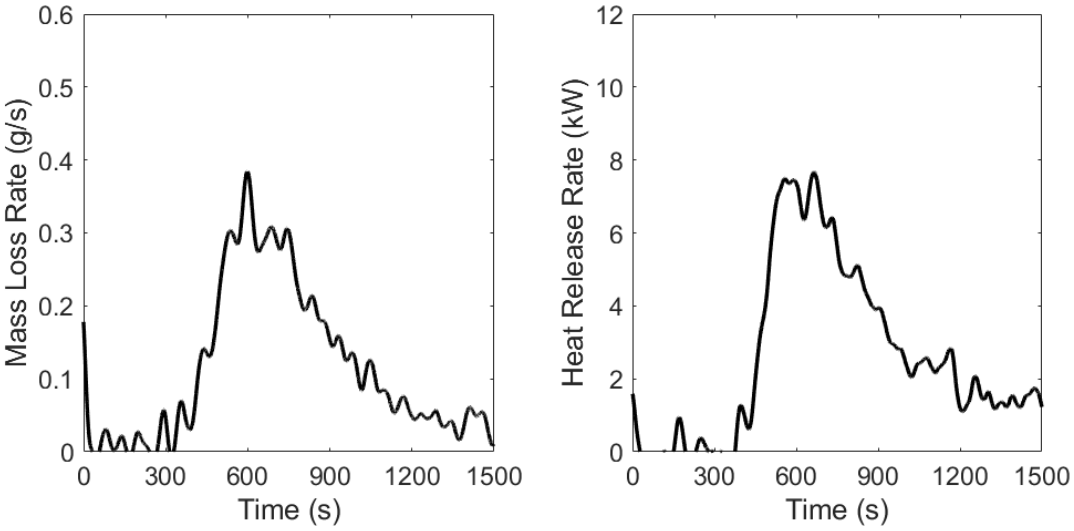

a) b)

Figure 20 Data for Configuration 3 a) mass loss rate; b) heat release rate

Configuration 2A and 3 – Heated on Panel B

5.20 Configuration 2A where Panel B was heated was comprised of 21.5 mm thick glass. During this test, there was an error with one of four the radiant panels between 1 min 40 s and 2 min 40 s. During this period the overall heat flux received by the test specimen would have been reduced.

5.21 During this test, it was observed that:

5.21.1 At around 3 min, bubbles began to form in the PVB inter-layer;

5.21.2 At around 4 min 37s, pyrolysis gas began to emerge from the top of Panel B;

5.21.3 By 5 min the bubbles in the inter-layer had grown in size and extent so that they were visible across most of Panel B;

5.21.4 At 5 min 16 s ignition occurred at the top of Panel B;

5.21.5 Between 6 min 30 s and 8 min 50 s dripping burning polymer was visible on the front of Panel B;

5.21.6 At 8 min 7 s, ignition occurred at the base of Panel B;

5.21.7 Between 11 min 14 s and the end of test, dripping polymer was visible on both glass surfaces, it did not ignite;

5.21.8 Flameout at 35 min;

5.21.9 At 45 min, end test.

5.22 During the test on Configuration 3, where it was heated in the central region, it was observed that:

5.22.1 From around 2 min, bubbles began to form in the PVB inter-layer;

5.22.2 At 5 min 23 s, the front glass pane shattered;

5.22.3 At 6 min 10 s, ignition occurred;

5.22.4 Between 7 min and 8 min, the burning area increased;

5.22.5 Between 10 min and 11 min, flowing burning polymer was observed on the right side of the panel;

5.22.6 By 35 min, burning was localised to flamelets in the heated region;

5.22.7 At 35 min, end test.

5.23 Figure 21 shows the damaged panels after the tests, and Figure 22 shows the data that was recorded during the tests.

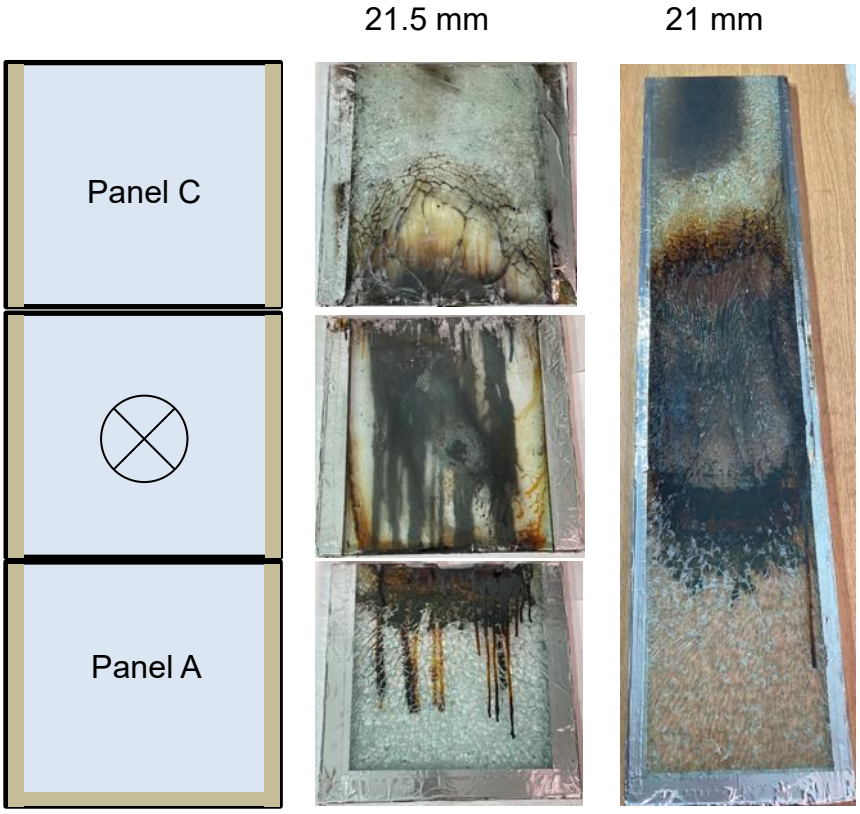

Figure 21 Panels after heating in the central region

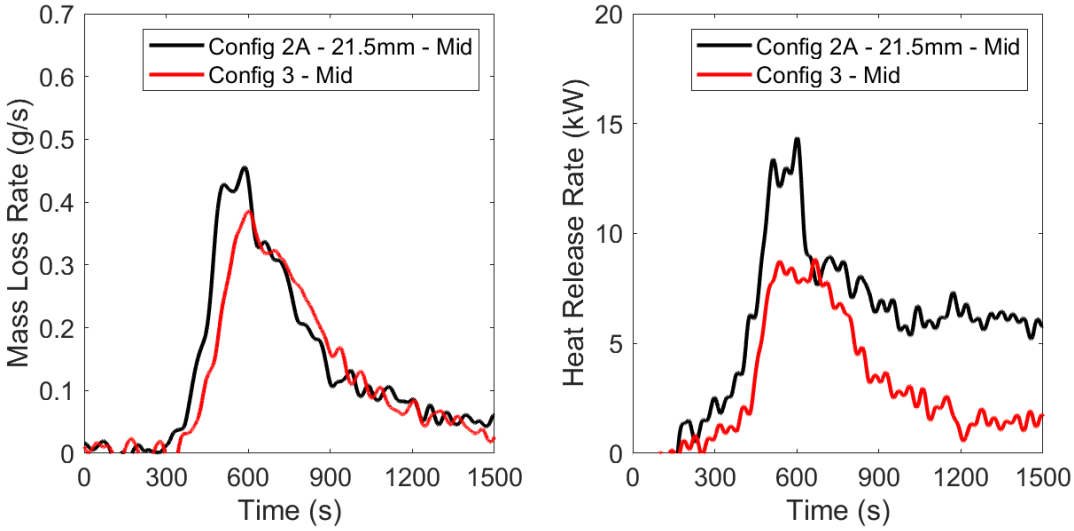

Figure 22 Data for Configuration 2A and 3 when heated in the middle a) mass loss rate, and b) heat release rate

APPENDIX C3:
Balcony fire demonstration test methodology and matrix

Authors: M Spearpoint[1], K Chotzoglou[2], I Rickard[1]

[1]OFR, [2]Efectis

Contents

C3-1. Introduction 1
C3-2. Terraces 3
C3-3. Balcony demonstration test options 5
C3-3.1 Balcony design parameters 5
C3-3.2 Assessment of performance 7
C3-4. Proposed test matrix 9
C3-4.1 Variables 9
C3-4.2 Rig design 15
C3-5. Combustible decking 18
C3-5.1 Classification 18
C3-5.2 Common use 18
C3-5.3 Recommendation 19
C3-6. Laminated glass balustrade 20
C3-7. Balcony fire load 22
C3-7.1 Calculation method 22
C3-7.2 Fire Load #1 24
C3-7.3 Fire Load #2 26
C3-7.4 Other fire load options 27
C3-7.5 Conclusion 28
C3-8. Measurements 30
C3-8.1 Ambient conditions 30
C3-8.2 Heat release rate 30
C3-8.3 Mass loss of fuel 30
C3-8.4 Heat flux measurements 30
C3-8.4.1 Heat Flux measured around the crib 30
C3-8.4.2 Heat Flux measured on the façade 31
C3-8.4.3 Heat Flux measured under the balconies 32
C3-8.5 Temperatures 32
C3-8.6 Video recordings 33
C3-9. New Zealand prescriptive requirements for balconies 34
C3-10. References 35

Figures

Figure C3-1 Masonry wall construction 15
Figure C3-2 Proposed three-storey balcony structure tied to the masonry wall 16
Figure C3-3 Proposed modification to create a ‘window’ to represent a fire originating from an adjoining room 17
Figure C3-4 Balcony balustrade glass fixing methods 20
Figure C3-5 General arrangement of a crib 22
Figure C3-6 Calculated HRR for Fire Load #1 including empty balconies 25
Figure C3-7 Calculated HRR for Fire Load #1 excluding empty balconies 25
Figure C3-8 Calculated HRR for Fire Load #2 including empty balconies 26
Figure C3-9 Calculated HRR for Fire Load #2 excluding empty balconies 27
Figure C3-10 Calculated HRR for XPS crib excluding empty balconies 28
Figure C3-11 Balcony configuration with radiant flux instrumentation layout, crib located on the ground floor 31
Figure C3-12 Balcony configuration with thermocouple layout, crib located on the ground floor 32
Figure C3-13 Figure 3.21 from C/AS2 34

C3-1. Introduction

As part of the on-going research on behalf of the Building Safety Regulator (BSR) within the Health and Safety Executive, previous work has completed a scoping study to identify key fire safety issues and establish the current state of knowledge concerning balconies, spandrels, and laminated glass (**Appendix A/B**). This earlier work investigated the historical background and reviewed the current provisions in Approved Document B (and their effectiveness) where the findings have been used to inform the work described herein.

The next step in the project is to develop further evidence through research to inform future policy options. BSR has asked that the research be taken forward, for the following specific points:

- **Balconies**: Generate further understanding on storey-to-storey fire spread via balconies considering both the construction and movable content. This research should generate knowledge on fire exposure conditions for balcony structures and establish the real fire performance of fire stopping and common detailing for balcony connections/junctions. Whilst the focus of the research will be on private/shared balconies, any relevant findings should also be considered in view of common/deck access balconies and terraces. Finally, examine the regulatory approach in New Zealand which is thought to provide practical measures to mitigate balcony fire spread,
- **Laminated glass**: Conduct further research on the fire behaviour of laminated glass with focus on the potential for spread in the context of curtain walling and balcony balustrades. This work will build-on the previous work undertaken by OFR [1], the experiments carried out as part of this research project, and also the work commissioned on behalf of the Scottish Building Standards (SBS) Division. In addition, after establishing the fire behaviour of laminated glass, consider the need for further knowledge on the impact of fixing arrangements. The fixing arrangement work will need to be discussed with BSR prior to commencement, and
- **Spandrels**: Propose research on the underlying performance requirements for external storey-to-storey fire spread with a focus on fire plume projection, impingement, and re-entry (i.e., independent of the contribution of combustible external wall material). The proposal will need to consider the fundamental role of the spandrel zone in not presenting a weak link for storey-to-storey fire spread and to what extent it delays such spread. This will require that common/representative fire stopping and connection details be established. The proposal should review and comment on the real fire performance in view of current standard fire stopping test methods and classifications. Thie proposal will need to work with the external wall systems (EWS) workstream to feed in knowledge to this related parallel project. The work on spandrels should look to establish a reference baseline for performance and fire spread timelines upon which further research involving wall materials might be evaluated as part of the EWS work.

At this stage, four distinct work items have been identified to address the above research points, namely:

- A balcony fuel load survey, which is covered in **Appendix C1**,
- A series of small-scale laminated glass experiments which is reported in **Appendix C2**,
- Development of the spandrel proposal which could be carried out in conjunction with the EWS project, which is given in **Appendix C6**, and
- Full-scale balcony demonstration tests, discussed herein.

The objectives of this document are to:

- Consider which elements of terraces (distinct from balconies) should be addressed in the next workstreams,
- Outline the range of test variables that could be investigated in the full-scale balcony demonstration tests so that these can be discussed and agreed with BSR,
- Introduce the design of the rig that could be used to carry out the full-scale balcony demonstration tests which also aligns to the current plans for the EWS workstream, and
- Summarise the prescriptive requirement for balconies in the New Zealand Acceptable Solutions, as previously requested by BSR.

Following a recent series of commercial tests undertaken at the Efectis laboratory a large masonry wall construction has become available. This wall provides an opportunity to undertake an assessment of fire spread between balconies without the need to construct a new rig. The configuration of the masonry wall and balcony structure is discussed further in Section C3-4.2.

In addition, a recent fire at Hallam Court, Croydon has illustrated the potential for a balcony balustrade consisting of combustible solid materials (likely to have been high-pressure laminate, HPL) to contribute to the upward spread of fire between storeys. BSR has expressed an interest in further examining this incident. This project presents an opportunity to carry out such an investigation by including a similar balcony balustrade as part of a large-scale demonstration test.

C3-2. Terraces

The 2020 publication of BS 8579 [2] makes a specific distinction between terraces and balconies. As noted in **Appendix A/B**, the standard deals with types of balconies and terraces giving information regarding those, as well as definitions. The definition of a balcony is given as:

> *"3.2 Balcony: Accessible external amenity platform above ground level exterior to and with direct access from a building*
>
> *NOTE 1 A balcony is formed above an external space that is not a habitable room. See 3.9 for the definition of terrace.*
>
> *NOTE 2 A balcony is not regarded or designed as storage space.*
>
> *NOTE 3 For the purposes of fire, a balcony is not a roof."*

This definition must therefore be read jointly with the definition of terraces, which states:

> *"3.9 terrace: external accessible surface above an internal space above ground level exterior to and with direct access from a building to occupants for purposes other than exclusively maintenance*
>
> *NOTE 1 A terrace is a roof for the purposes of fire and waterproofing. Additionally, for fire purposes, a terrace can also perform the function of a floor.*
>
> *NOTE 2 Certain spaces might incorporate features of both a balcony and terrace."*

These two definitions therefore illustrate that the difference between a terrace and a balcony is that an internal space is provided underneath a terrace, i.e., the terrace also acts as a roof. When compared to a roof, from a construction standpoint, and specifically when considering fire resistance (REI), the internal space beneath a terrace would be treated similarly to that of any other space below a roof. The main difference when compared to a roof would be that any fire load introduced by the building users could be located on the terrace which could therefore get ignited in the event of a fire starting underneath the terrace (where typically the separation would not be fire rated). However, this would be similar to a situation where a fire started underneath a balcony. The only difference being that the fire development may differ as a fire starting within an enclosed space (i.e., underneath a terrace) would have different ventilation conditions when compared to a fire starting on an open balcony. The impact of this parameter could be investigated by examining the opening percentage of balconies.

From an occupant usage perspective there is no reason to think that the fire load on a terrace would be any different to a balcony. Thus, when considering the fire load on a terrace, and the impact of a fire on a terrace in relation to external walls and balconies in proximity, then the distinction between the two is much less important. Similarly, the construction of areas of an external wall would unlikely be any different whether they are adjacent to a balcony or a terrace, notwithstanding these areas may differ from other parts

of the external wall. Therefore, in the proposed research set out in this document no further consideration will be made on the fire resistance performance of terraces beyond those recommendations currently made for a roof or floor. With respect to external fire spread, no distinction will be made between balconies and terraces (hereafter simply referred to as ‘balconies’) regarding the potential fire load and the provision of balustrades.

C3-3. Balcony demonstration test options

C3-3.1 Balcony design parameters

This document sets out the various options for the full-scale balcony demonstration tests. The objective of this report is to present the options to decide which should be explored and prioritise those which are selected for further investigation. The selection of any tests will need to consider to what extent they represent

- A reasonable (or absolute) worst case,
- Past construction practices,
- Likely current (and future) construction practices,

and whether all these need to be examined as part of this project.

In designing the demonstration tests there will need to be consideration of how many balconies should be present, how they should be constructed and what geometry to use (both the size of an individual balcony but also how they should be arranged). As additional parameters are introduced, the number of tests will also increase and therefore it is impossible to investigate every combination given the resources available. Decisions will have to be made on what parameters should be varied and what will have to be kept constant.

Options to consider are as follows:

- **Combustibility:** The structure of a balcony can be constructed of some proportion of combustible and non-combustible materials (e.g., wood vs. concrete) in which the spectrum could extend between it being wholly combustible or non-combustible. Where a balcony is constructed with combustible materials there is the option to protect those elements by encapsulating them in a non-combustible lining or similar.
- **Open floors**: The effect of openings in the floor of a balcony could allow for burning items to fall to a lower level or allow easier ignition of items on balconies above through flame impingement or by the heating from hot fire gases. In the case of the falling hazard this could be a means to initiate fire, for example via carelessly discarded smoking materials, hot coals from a barbeque, or similar; or as a means of fire spread by dripping flaming materials or similar. The extent of the openings in terms of percentage and configuration (e.g., slats or grating) would need to be determined, but an upper boundary of a typical percentage opening used in design would likely provide the most challenging scenario.
- **Combustible floors**: Although the balcony structure might be non-combustible it is possible that the floor may be allowed to be constructed and/or covered with a combustible material to add a decorative effect, provide a less slippery surface, etc. A combustible flooring (e.g., wood, composite material, synthetic grass) material may

add to the severity of a balcony fire or provide an easily ignitable surface that results in vertical fire spread to upper floors.

- **Balustrade construction**: The construction of the balustrade may affect the dynamics of a balcony fire:
    - Like floors, combustible materials (and of specific interest in this research, laminated glass) could increase the severity, but the magnitude of the increase should be investigated. In addition, whether fire on a balcony below could spread upwards; and whether burning items from the fire load introduced by the residents, from burning droplets generated by combustible balustrades, etc. could more easily fall to lower levels and contribute to downward fire spread.
    - The extent to which the balustrade presents an opening may affect how wind interacts with a fire. The percentage of opening to outside could also impact the fire dynamics; current common practice suggests that balconies should have at least 50% opening to be considered as open. As noted in **Appendix A/B** where this value has come from is presently unknown.
    - Adjoining balconies can also be separated with a solid or perforated partition similar to a balustrade. Typically, these separations are not fire-rated and could even be made of combustible material. Therefore, a fire could spread laterally from one balcony to another depending on how combustible materials are arranged on the balconies.
- **Balcony size**: Balconies come in a range of sizes depending on their use. Shared balconies and those intended for access will likely be larger than those for private, individual use. Within these categories the sizes will vary. The tests will need to consider whether a single size should be used for the balconies in a given test, and also whether the same size should be used throughout. The maximum size of the balcony will be restricted by the experimental set up. In addition, the shape of the balcony could be varied, although the expectation is that a rectangular footprint will be used as this appears to be typical for most buildings.
- **Stacking geometry**: Balconies can be stacked uniformly, or the arrangement could be complex. Not every storey of a building might have a balcony. Even where balconies have a constant footprint size, the stacking may mean a balcony is offset from its nearest neighbour. Where the footprint size of balconies varies, the stacking arrangement will also contribute to the stacking complexity.
- **Balcony arrangement**: Balconies may be projecting or recessed, where recessed present several benefits over projecting balconies because they are enclosed on three sides. However, they may end-up enclosed and so effectively become an internal space.
- **Structural performance**: For a balcony to resist normal service loads (e.g., occupants, contents, wind) plus its own self-weight it will have its own inherent structural performance. The fire resistance of a balcony provides a measure of how it might be expected to perform in terms of its stability in the event of a fire. However, it is not clear what the fire resistance of a balcony might be when considering its

inherent structural performance. Furthermore, it is not clear what severity of fire the balcony should be exposed to so as to assess its structural fire performance, and what are the exposed surfaces (severity of fire below and above) and boundary conditions (e.g. unexposed surface, connection with the building structure) to be applied on its structure. The fire load survey will help to inform this aspect, and the research might want to consider whether the structural fire performance of a balcony should be expected to perform over and above its inherent capability in response to the risk. Therefore, design fire scenarios and an appropriate design fire will need to be identified.

- **Fire stopping**: Where the objective is to mitigate storey-to-storey fire spread via the balcony then the fire stopping at the junction between the balcony and external wall could be critical. The specification of the fire stopping can present design challenges in detailing. Various solutions are available and therefore there will need to be some consideration on which should be investigated when planning the tests. Currently, from experience, the space is packed with mineral wool which should be dense enough to achieve the required level of fire resistance. However, this solution is often not a tested detail although this does not necessarily mean it does not perform adequately.
- **Thermal breaks** used to improve the thermal efficiency of a building and limit thermal bridges via the balcony connections to the main building structure can be made of combustible material and therefore could contribute to the spread of fire from one floor to another or could contribute to structural failure of the balcony connections to the main building structure.
- **Ignition location**: There is potential for balcony configurations to either promote or hinder storey-to-storey fire spread externally. Depending on the ignition location in demonstration tests, the potential for fire spread both between balconies and between apartments with balconies could be assessed. Ignition of a moveable fire load may occur on the balcony or alternatively the fire may be within a room adjoining the balcony which then leads to an external flame through a door or window. This flame would likely impinge on any balcony above the originating room and may also ignite any moveable fire loads either on the balcony above or the balcony adjoining the originating room.

C3-3.2 Assessment of performance

While the variables to investigate and experimental setup can be agreed so that the work can progress, it is important to note that currently there is not a clearly defined performance goal for balconies with respect to vertical fire spread. Clause B4.(1) of the Building Regulations states:

> *The external walls of the building shall adequately resist the spread of fire over the walls and from one building to another having regard to the height, use and position of the building.*

However, this only refers to ‘external walls’ whereas balconies are treated as an 'attachment’ which, as already emphasised above, includes aspects that are not always applicable to walls.

It is proposed that the balcony demonstration test results be initially ranked in terms of best performance to worst performance, with the worst performance being that which shows the shortest delay to storey-to-storey fire spread or to structural failure. Following this and based on the outcomes of the spandrel zone experiments which have the possibility to be carried out as part of the EWS project, the acceptability of the performance of the balcony configurations could be considered. To definitively define an adequate performance for balconies prior to understanding the performance achieved by conventional external wall systems which do not feature balconies is considered inappropriate at this stage. However, as an initial fire safety approach, it seems reasonable to postulate a performance objective of: the balcony should not promote more rapid fire spread than might be expected of a building without balconies. Furthermore, a projecting balcony should not exhibit unacceptable structural failure which could impact on external fire spread and those people in and around the building.

C3-4. Proposed test matrix

C3-4.1 Variables

As detailed above, there is a considerable number of potential variables that could be examined not just in relation to the construction of balconies but also their arrangement on the façade of a building along with the interaction with the EWS. In proposing a series of large-scale tests consideration is needed on the practicality of constructing balconies and conducting the fires. Experimental facilities are limited by the available resources (space, personnel), instrumentation, health and safety concerns, etc.

The objective of the proposed demonstration tests is to compare the fire performance of different balcony configurations to assess whether fire spread occurs and, if so, which configurations exhibit a better performance. This should enable some form of relative performance ranking to be created. The proposed tests aim to represent reasonable worst cases, along with current and probable future construction practices. However, the influence of an EWS is not included in the proposal, partly as this would add another variable for which there are many types of EWS construction that could be investigated, and also there is the separate EWS project that may include an opportunity to further investigate this aspect. Therefore, it is proposed that the EWS for these tests be non-combustible throughout.

This section presents a set of possible scenarios that could be examined through the use of demonstration tests. There are 36 proposed scenarios which are derived from four relevant variables:

- Floor configuration and combustibility,
- Fire load, and
- Balustrade.

The above are repeated across the scenarios with the modification of the variables, namely:

- Combustible or non-combustible floor, where the combustible floor is either protected or unprotected by a non-combustible lining,
- Solid or perforated floor, where the perforated floor is at a maximum typical permeability,
- No movable fire load or design fire, and
- Balustrade consisting of
    - Solid non-combustible construction,
    - Open non-combustible construction, or
    - Laminated glass using appropriate support conditions.

Given the likely resources needed to carry out each test it will not be viable to conduct every scenario. Therefore, a proposed priority has been indicated in which green means the scenario should be carried out, orange means that the scenario would provide useful additional insights and red would appear to not be particularly beneficial. Once the scope of the series of demonstration tests is agreed then further work will be needed to finalise the detailed design of the balconies including footprint, construction and balustrades. The final determination of which tests can be completed will depend on the cost of each and the time required to complete each one.

Scenario number	Balcony floor		Balustrade		Fire source	Other balconies	Comments
	Material	Form	Material	Form			
1.	Non-combustible	Solid	Non-combustible	Solid	BS 8414 crib in combustion chamber on Level 0	None	Fire has occurred in an adjoining apartment with flames extending from a window. The balcony would deflect any flames away from opening on upper levels and thus the expectation would be should storey-to-storey fire spread occur it would be slower than were the balcony not present. The test would allow for measurement of the heat flux received underneath the balcony and then an analysis of the impact on the structure and flooring. Measurement could be made to assess the likelihood that any moveable fuel load and/or combustible floor covering be ignited.
2.	Non-combustible	Solid	-	Open	BS 8414 crib in combustion chamber on Level 0	None	Essentially as per Scenario 1
3.	Non-combustible	Solid	Laminated glass	Solid	BS 8414 crib in combustion chamber on Level 0	None	Measurements of the incident flux from the internal fire could be made to the balustrade on the same level and the level above, but this could be equally done as part of Scenario 1, should that be included in the programme.
4.	Non-combustible	Solid	Non-combustible	Solid	Design fire crib on Level 0	None	This scenario would characterise the baseline condition should a fire occur on a balcony resulting from ignition of the moveable fire load. The scenario would allow for measurements of the conditions on an upper balcony (e.g., heat flux, temperature).
5.	Non-combustible	Solid	-	Open	Design fire crib on Level 0	Design fire cribs on Level 1 and Level 2	The scenario would allow an assessment of the likelihood of fire spread between movable fire loads on upper levels.
6.	Non-combustible	Solid	Laminated glass	Solid	Design fire crib on Level 1	Design fire cribs on Level 0 and Level 2	The scenario would allow for the assessment of any contribution to potential upward and downward fire spread of a laminated glass balustrade.
7.	Non-combustible	Perforated	Non-combustible	Solid	BS 8414 crib in combustion chamber on Level 0	None	Depending on the extent of floor perforation, this scenario would be somewhere between having a solid floor (Scenario 1) and no balcony (i.e., an ordinary external wall).
8.	Non-combustible	Perforated	-	Open	BS 8414 crib in combustion chamber on Level 0	None	Essentially as per Scenario 7.
9.	Non-combustible	Perforated	Laminated glass	Solid	BS 8414 crib in combustion chamber on Level 0	None	Essentially as per Scenario 7.

Scenario number	Balcony floor		Balustrade		Fire source	Other balconies	Comments
	Material	Form	Material	Form			
10.	Non-combustible	Perforated	Non-combustible	Solid	Design fire crib on Level 0	Design fire cribs on Level 1 and Level 2	Similar to several other proposed scenarios.
11.	Non-combustible	Perforated	-	Open	Design fire crib on Level 1	Design fire cribs on Level 0 and Level 2	The scenario would allow an assessment of the likelihood of fire spread between movable fire loads on both upper and lower levels. Compared with Scenario 5 this appears to be preferable as Scenario 5 only examines upper spread.
12.	Non-combustible	Perforated	Laminated glass	Solid	Design fire crib on Level 0	Design fire cribs on Level 1 and Level 2	Similar to several other proposed scenarios.
13.	Combustible	Solid	Non-combustible	Solid	BS 8414 crib in combustion chamber on Level 0	None	This scenario represents a case of what might be seen as a balcony that could be part of a lower-rise building, and excludes the effect of introducing a moveable fire load. Measurement could be made to assess the likelihood that any moveable fuel load be ignited, or moveable fire loads could be placed on the balconies.
14.	Combustible	Solid	-	Open	BS 8414 crib in combustion chamber on Level 0	None	Essentially as per Scenario 13.
15.	Combustible	Solid	Laminated glass	Solid	BS 8414 crib in combustion chamber on Level 0	None	Essentially as per Scenario 13.
16.	Combustible	Solid	Non-combustible	Solid	Design fire crib on Level 1	Design fire cribs on Level 0 and Level 2	Essentially as per Scenario 18.
17.	Combustible	Solid	-	Open	Design fire crib on Level 1	Design fire cribs on Level 0 and Level 2	Essentially as per Scenario 18.
18.	Combustible	Solid	Laminated glass	Solid	Design fire crib on Level 1	Design fire cribs on Level 0 and Level 2	This scenario would provide a comparison between using a combustible and non-combustible floor as per Scenario 6.
19.	Combustible	Perforated	Non-combustible	Solid	BS 8414 crib in combustion chamber on Level 0	None	Little difference between this scenario and Scenario 7.
20.	Combustible	Perforated	-	Open	BS 8414 crib in combustion chamber on Level 0	None	Little difference between this scenario and Scenario 8.

Scenario number	Balcony floor		Balustrade		Fire source	Other balconies	Comments
	Material	Form	Material	Form			
21.	Combustible	Perforated	Laminated glass	Solid	BS 8414 crib in combustion chamber on Level 0	None	Little difference between this scenario and Scenario 9.
22.	Combustible	Perforated	Non-combustible	Solid	Design fire crib on Level 1	Design fire cribs on Level 0 and Level 2	Almost a 'worst-case' in which a fire starts on a balcony but Scenario 24 appears preferable.
23.	Combustible	Perforated	-	Open	Design fire crib on Level 1	Design fire cribs on Level 0 and Level 2	Almost a 'worst-case' in which a fire starts on a balcony but Scenario 24 appears preferable.
24.	Combustible	Perforated	Laminated glass	Solid	Design fire crib on Level 1	Design fire cribs on Level 0 and Level 2	The scenario represents a likely worst-case configuration in which a fire starts on a balcony.
25.	Protected combustible	Solid	Non-combustible	Solid	Design fire crib on Level 0	None	Essentially as per Scenario 28.
26.	Protected combustible	Solid	-	Open	BS 8414 crib in combustion chamber on Level 0	None	This scenario would assess the effectiveness of the encapsulation separate from any balustrade and fire load.
27.	Protected combustible	Solid	Laminated glass	Solid	Design fire crib on Level 0	None	Assuming the laminated glass balustrade performs as expected then this scenario should perform similar to Scenario 25 and thus similar to other scenarios.
28.	Protected combustible	Solid	Non-combustible	Solid	Design fire crib on Level 0	None	Assuming the encapsulation performs as intended then this scenario is equivalent to Scenario 4.
29.	Protected combustible	Solid	-	Open	BS 8414 crib in combustion chamber on Level 0	Design fire cribs on all three levels	This scenario tests the performance of protecting the combustible floor but allowing for a challenging arrangement of balustrade and moveable fire load. It would also be a useful scenario to assess an open balustrade configuration through measurements.
30.	Protected combustible	Solid	Laminated glass	Solid	Design fire crib on Level 1	Design fire cribs on Level 0 and Level 2	Assuming the encapsulation performs as intended then this scenario is equivalent to Scenario 6.
31.	Protected combustible	Perforated	Non-combustible	Solid	BS 8414 crib in combustion chamber on Level 0	Design fire cribs on all three levels	Given the intention is to encapsulate the combustible floor with a non-combustible lining then it is unlikely this solution would be combined with a perforated floor.
32.	Protected combustible	Perforated	-	Open	BS 8414 crib in combustion chamber on Level 0	Design fire cribs on all three levels	As per the comment given for Scenario 31.

Scenario number	Balcony floor		Balustrade		Fire source	Other balconies	Comments
	Material	Form	Material	Form			
33.	Protected combustible	Perforated	Laminated glass	Solid	BS 8414 crib in combustion chamber on Level 0	Design fire cribs on all three levels	As per the comment given for Scenario 31.
34.	Protected combustible	Perforated	Non-combustible	Solid	Design fire crib on Level 1	Design fire cribs on Level 0 and Level 2	As per the comment given for Scenario 31.
35.	Protected combustible	Perforated	-	Open	Design fire crib on Level 1	Design fire cribs on Level 0 and Level 2	As per the comment given for Scenario 31.
36.	Protected combustible	Perforated	Laminated glass	Solid	Design fire crib on Level 1	Design fire cribs on Level 0 and Level 2	As per the comment given for Scenario 31.

C3-4.2 Rig design

As introduced in Section C3-1, Efectis have available a 10 m wide, 6 m tall masonry wall (Figure C3-1) under the calorimeter. The wall includes a frame of steel sections and support framing elements (not shown).

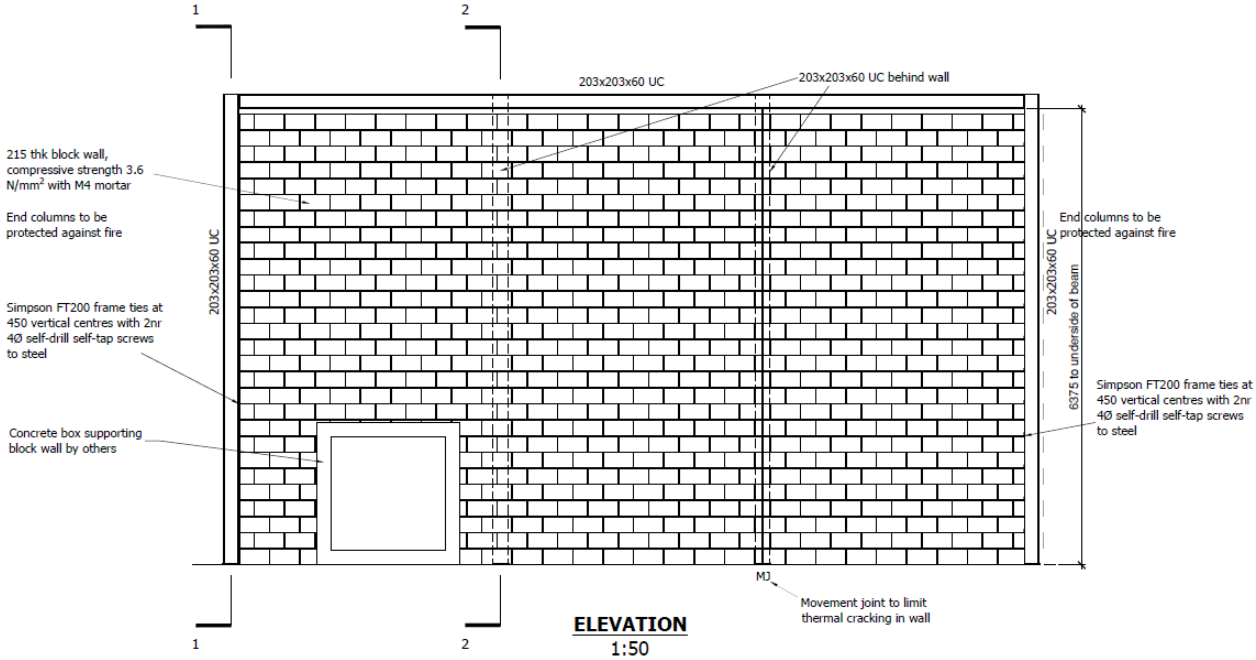

Figure C3-1 Masonry wall construction.

The balcony structure will consist of 152 × 152 × 23 mm steel uprights with 150 × 75 mm channel horizontal members (Figure C3-2). The structure will be tied back to the wall. The floors will have an open mesh floor upon which a combustible or non-combustible decking can be placed. The balustrade handrails will be adjustable to allow the placement laminated glass panels or other systems. A handrail will be installed on the ground floor ‘balcony’ as well.

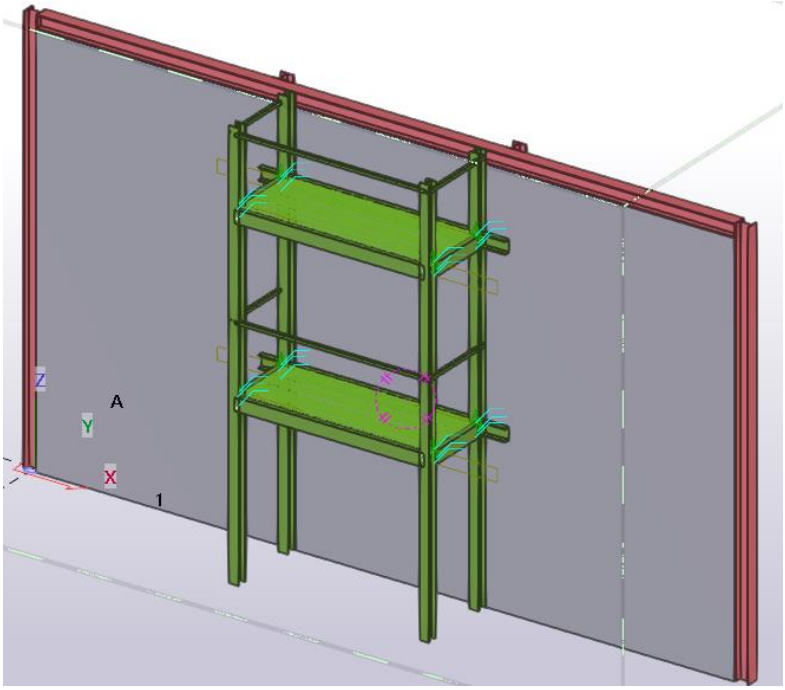

Figure C3-2 Proposed three-storey balcony structure tied to the masonry wall

The exact type, number and location of instrumentation will need to be finalised once the scope of the experiments has been agreed. However, it is highly likely that gas temperatures, solid temperatures, heat fluxes along with visual records will be necessary. The proposal is to measure the mass loss rate of the fuel source and the heat release rate via oxygen consumption calorimetry. More details on the proposed instrumentation as given in Section C3-8.

Where the proposed tests are to be used to provide results across several of the BSR projects then additional instrumentation is likely to be appropriate. This may include measurement of the properties already listed above but at more locations and/or to a greater fidelity but also to measure parameters that are not directly relevant to the assessment of fires and balconies. For example, as part of the Smoke and Toxicity project, measurements of smoke obscuration, toxic gas species and oxygen reduction might be desirable. Care will be needed to ensure that by expanding the scope of the measurements beyond the specific project objectives does not unduly compromise the outcome.

The first phase of assessment will need to consider the impact of a fire starting in the moveable fire load on a balcony or a fire originating in an adjoining room. The outcome of this assessment will indicate which situation may be more onerous and therefore which should be used to complete the tests proposed in the matrix. It is therefore currently proposed that the masonry wall be modified to have a concrete box similar to that shown in Figure C3-1 placed under the first-floor balcony and a BS 8414 crib be used to represent a fire in an adjoining room (Figure C3-3). One advantage of this arrangement is that heat fluxes to walls in the BS 8414 test are already known from work carried out as part of the EWS project and so this will allow a comparison to be made when a balcony is located above the opening.

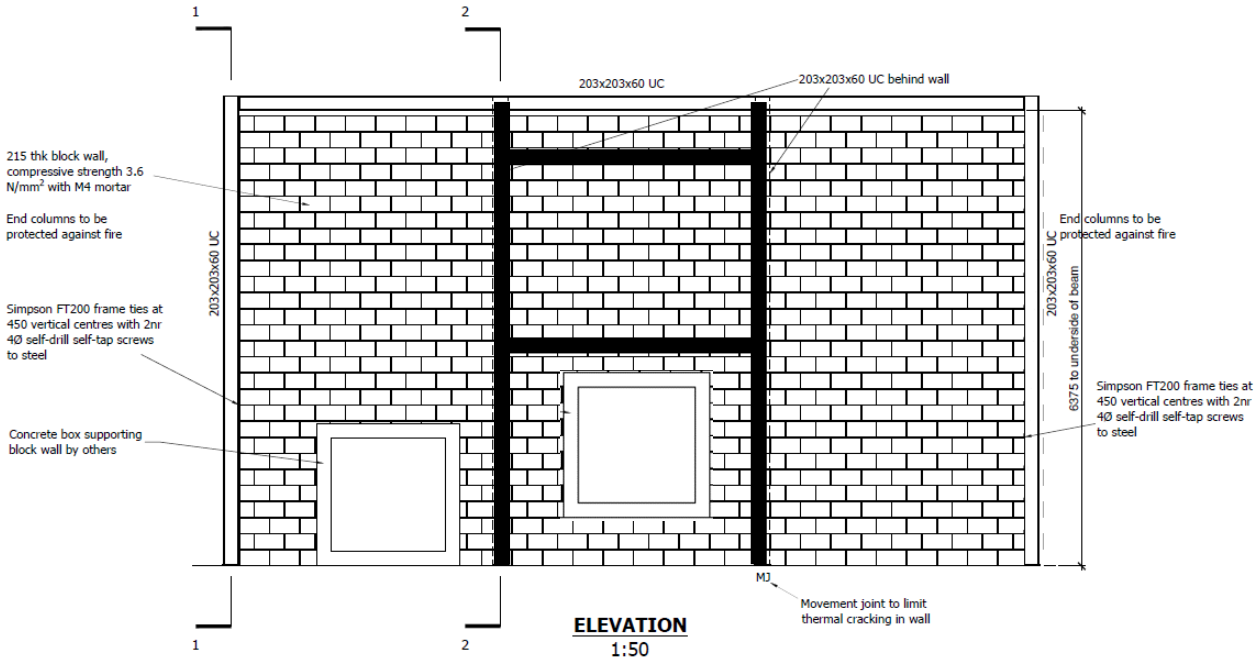

Figure C3-3 Proposed modification to create a 'window' to represent a fire originating from an adjoining room

The exact distance of the top of the 'window' below the balcony floor above is to be finalised but it will likely be somewhere between 200 mm and 300 mm to represent a reasonable worst case in which the top of the window is closer to the underside of the balcony. In the work of Murad et al. [3] the distance of this 'spandrel zone' was 213 mm. It might be practical for this exact distance to be related to the removal of the blockwork and positioning of the box.

C3-5. Combustible decking

C3-5.1 Classification

Balcony decking is available in different materials from a range of sources. In some cases, decking boards are made of a single material, such as wood. However, there are various manufacturers that supply some form of composite board which may include materials such as wood fibre, plastics and minerals – some of which may be recycled. However, often it is difficult to easily find out the exact composition of a particular composite board.

Composite decking has been implicated in some recent fires of specific interest to government. The Bolton Cube fire included plastic imitation-timber decking planks. The 140 mm wide × 30 mm thick planks were set at 146 mm to 149 mm centres with gaps ranging from approximately 6 mm to 9 mm between planks. No further information on the formulation or fire performance of the decking is available. The fire at Samuel Garside House, Barking is also reported to have included 25 mm thick composite decking planks on the balconies. Again, no further information on the planks is available.

Decking products come with different Euroclass ratings ranging from class A to as low as class E. Where decking is solid timber then this can be taken to reach class D without further testing. Treating the timber can result in products achieving class C or class B. Composite decking will have different classes depending on the product. For example, the Alfresco Floors[*] 'mineral composite' boards are advertised as being class A1. In contrast NeoTimber[†] composite decking is said to be class Cfl-S1, noting that the supplier states "*The Grenfell Fire and other major events have highlighted the importance of choosing the right buildings materials. For this reason, we only ever sell balcony composite decking where low-rise developments are specified. This is because our composite is "Cfl-S1" (EN 13501-1) fire-rated, ultimately meaning it is not suitable for high-rise developments.*" A patio decking material available from NATURinFORM[‡] in Germany has a class E certificate from ift Rosenheim GmbH. In some instances (for example Kedel[§]) the supplier appears to not mention fire performance anywhere on their website.

C3-5.2 Common use

Given the type of balcony decking available on the market it is useful to determine what types of materials are commonly used in practice. Discussions have taken place with design team members at OFR and also a member of DCCH (who are part of the 'Real Fires' project consortium) regarding the prevalence of different balcony decking types when considering new building design, existing buildings that have been assessed against

[*] alfrescofloors.com/zerodeck/
[†] neotimber.com/decking/inspiration/applications/balcony-composite-decking/
[‡] www.naturinform.com/en/
[§] www.kedel.co.uk/decking-recycled-plastic.html

PAS 9980, and where buildings have been subject to legal proceedings. Each of these are discussed below.

Design projects: There is an OFR project in London where the deck covering is polyurethane resin & mineral board (RMB) from Millboard (https://millboard.co.uk/). The manufacturer's data states that the decking board achieves a class Bfl-s1 classification. However, there are concerns that the actual fire performance might be worse if the boards are spaced apart at a greater distance. It has been suggested by the design team that it might be useful to conduct tests to understand how these boards burn and if molten droplets occur, potentially leading to fire spread both downwards and upwards.

In another project the balcony consists of concrete with class B phenolic insulation on the underside and timber decking boards. Others have suggested that Ecodeck products might have been used in some cases, although no details regarding specific projects were available. The supplier provided the following classifications of their products: Heritage board achieves a class D rating, Signature board achieves a class E rating, and Aluminium is classified as class A2. There was no mention of composite boards with a class E classification being encountered in a project. Even if they were installed, more focus is placed on what covers the underside of the balconies.

PAS 9980 reports: In the context of PAS projects involving combustible balconies, timber is the predominant choice of material, being favoured in over 80% of cases. Composite balconies, on the other hand, are relatively uncommon due to their higher cost. Where timber deck boards have been used as a floor covering sometimes the supporting joists are also timber, but more frequently, only the floor covering is made of timber. Given the leaching problem with most FR treatment and the horizontal orientation of the decking leading to water likely lying on it for longer it is generally just assumed timber is untreated as it is unlikely the treatment would last as long as with cladding. In these cases, a class D classification is assumed for the timber deck boards.

The PAS reports have a significant emphasis is placed on how balconies are managed. The potential fuel load of items like furniture, heaters, and e-scooters is considered a greater risk than the limited fire load contained in the deck boards alone.

Legal claims: According to DCCH there has not been a case they have worked on where the classification of the decking was known, largely because there were no restrictions so it would not form part of a claim. Where it has formed part of a claim it has been timber and deemed ‘combustible’ but there has not been a recommendation to have it tested as the defence is that it was not restricted at the time.

C3-5.3 Recommendation

Given the above findings it is recommended that the decking of a combustible balcony floor given in the matrix in Section C3-4.1 be formed of 25 – 30 mm thick untreated timber to class D. This would give a reasonably conservative assessment of the impact of the decking that could be used on actual balconies.

C3-6. Laminated glass balustrade

Following the small-scale laminated glass bench-scale experiments described in **Appendix C2**, the following recommendations were made regarding the design and construction of the balustrades for the full-scale experiments:

- That only PVB inter-layer needs to be assessed for the balustrades as this will give the more onerous conditions. If the impact of dripping is of specific interest, then the use of SGP inter-layer should be considered.
- Having the laminated glass panels configured with spider or spigot fixing methods such as (Figure C3-4) would expose the bottom edge which may induce dripping of the inter-layer. Should any potential dripping need to be mitigated than a channel may be a viable option. It is recommended that either a spider or spigot fixing be used in discussion with the project Expert Review Panel (ERP) members on which would be the most representative of common practice.
- For the panel thickness it would appear this is not a critical factor although using thinner panels may result in a higher peak heat release rate. It is recommended that the thinnest panel that is typically used for balcony balustrades be used in the proposed experiments.
- That the laminated glass panels should be allowed to break on their own accord (should they end up doing so) and there is no need to consider shattering panes prior to the fire. This would represent the normal course of events in real fires.

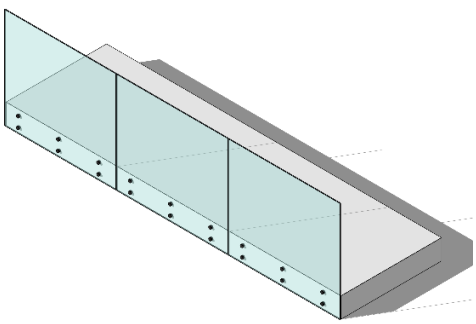

(a) Structural standoff

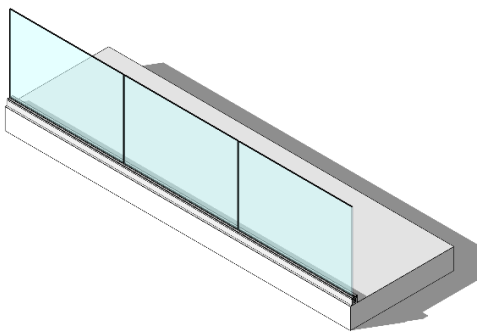

(b) Channel

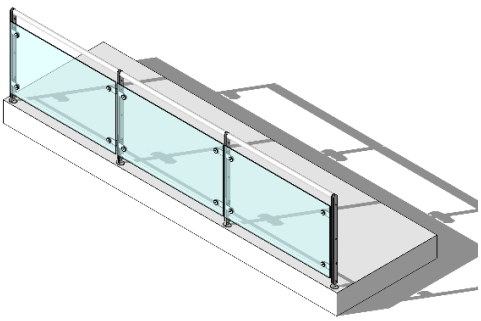

(e) Spider

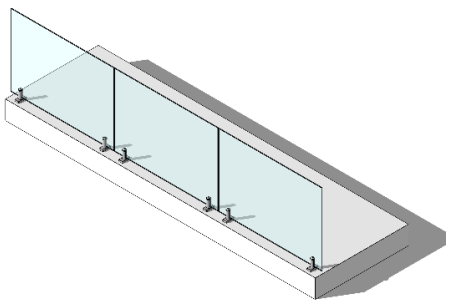

(d) Spigot

Figure C3-4 Balcony balustrade glass fixing methods

Feedback from **Appendix C2** from some members of the ERP raised some discussion regarding the fixing arrangement and also the glass type to use. Regarding the fixing arrangement it was felt that the channel would be the most common of the four mentioned above.

For the glass type it was suggested that members of the Society of Façade Engineering Technical Committee prefer that toughened glass be avoided completely if the design allowed for this. This is due to the risk of nickel sulphide (NiS) failures in toughened glass which would require the glass to be replaced. Instead, the glass would typically be two plies of heat strengthened glass, with an SGP interlayer. This raised a question on given the bench-scale experiments used toughened glass then how might heat strengthened glass perform under similar circumstances. However, other members of the ERP said that heat strengthened glass is virtually never used in balustrading, due to the required barrier loadings and deflection criteria that must be satisfied. Using toughened glasses allows the use of thinner and lighter laminates that meet the current regulatory requirements. Heat strengthened laminated glass would require thicker panels to obtain similar compliance and subsequently require supporting structure sufficient to support the increased weight. This normally means that the everything gets bigger and much less practical and buildable.

Furthermore, when considering NiS related failures an ERP member said that there are very few cases which have led to catastrophic and even rarer fatal incidents on buildings. Due to its lower strength, using heat strengthened glass will almost certainly break quicker and more regularly than fully toughened glass especially with any extreme impact or overloading etc.

It is therefore proposed that the balustrade in the full-scale experiments use toughened laminated glass with a PVB interlayer mounted in a channel to represent current construction practice. Further work could consider carrying out some bench-scale experiments using heat strengthened glass should that be deemed necessary by stakeholders.

C3-7. Balcony fire load

C3-7.1 Calculation method

A survey of fire loads on private residential balconies in England (see **Appendix C1**) found the 'typical balcony' had the following characteristics:

- Dimensions of 2.85 m wide and 1.3 m deep,
- An 80th percentile fire load energy density of 110 MJ/m^2 including empty balconies or around 180 MJ/m^2 if empty balconies are included,
- Wood / plastic material ratio of 40% to 60% by mass,
- Medium fire growth rate, and
- An 80th percentile peak rate of heat release of 173 kW/m^2 including empty balconies or around 310 kW/m^2 if empty balconies are included.

The most practical method to represent this fire load in the experiments is to use a crib arrangement (Figure C3-5) that can best represent these characteristics.

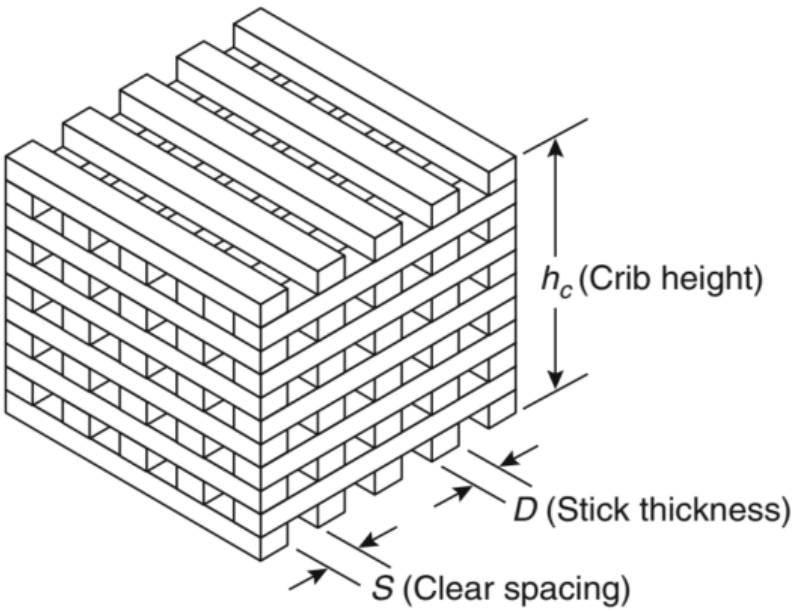

Figure C3-5 General arrangement of a crib, taken from Babrauskas [4]

The SFPE Handbook [4] presents a calculation method to determine the mass burning rate of a crib using the following equations.

For fuel surface control:

$$\dot{m} = \frac{4}{D} m_o v_p \left(\frac{m}{m_o}\right)^{1/2}$$

with

$$m = m_o - \sum_{i}^{t} \dot{m}_i(t_i)\,\Delta t$$

For crib porosity control:

$$\dot{m} = 4.4 \times 10^{-4} \left(\frac{S}{h_c}\right)\left(\frac{m_o}{D}\right)$$

For the case of a centre-ignited crib, time $t < t_0$

$$\dot{m} = 0.0254 m_o \frac{v_p t^2}{n^2 D}$$

where

$$t_0 = 15.7n$$

The SFPE method assumes the crib is constructed of a single material which affects the regression velocity, v_p. Values for v_p are given for wood, PMMA, thermosetting polyester and rigid PU foam. Given the balcony fire load has been found to be a mixture of wood and plastic it is proposed that one option for the crib is to use a combination of wood and PMMA sticks. In such case, the value for v_p will be a mass weighted average of the values given in the SFPE Handbook.

When determining the fire growth rate, the method considers that ignition of the crib is from the centre or is ‘simultaneous’. However, using these ignition locations allows for a relatively rapid fire spread. Igniting a crib at an edge or corner will likely give a slower fire development however the SFPE method does not address these options. One approach proposed herein is to assume that where a crib is ignited at an edge then the growth rate is halved and where it is ignited at a corner then the rate is reduced by one quarter. Similarly, if two edges are ignited simultaneously then the growth rate is the same as a centre ignition, etc. This fractional approach has been applied in recent work by Spearpoint et al. [5] with some success although the cribs used were fairly small and only two arrangements were investigated.

To calculate the heat release rate of the crib, the mass burning rate is multiplied by an appropriate heat of combustion. Where a mixture of fuels is used then a mass weighted average is applied. For wood a calorific value of 12,000 kJ/kg is applied (as per SFPE Handbook [4]) and for PMMA a calorific value of 24,900 kJ/kg [6] is used. When calculating

material masses a density of 640 kg/m^3 is assumed for wood (Yellow pine, Drysdale [6]) and 1190 kg/m^3 for PMMA, again from Drysdale.

C3-7.2 Fire Load #1

For the case of the survey results that included empty balconies the crib would consist of 4 layers of wood and 3 layers of PMMA with a stick cross-section D of 12 mm and a length of 1.2 m. There would be 9 sticks per layer (n) giving a stick spacing of 136.5 mm and total of 63 sticks (36 wood and 27 PMMA). The stick volume is

$$V = LD^2$$

$$V = 1.2 \times 0.012^2 = 1.73 \times 10^{-4} \text{ m}^3$$

The mass of wood is

$$m_{o,wood} = nV\rho$$

$$m_{o,wood} = 36 \times 1.73 \times 10^{-4} \times 640 = 4.0 \text{ kg}$$

and the mass of PMMA is

$$m_{o,PMMA} = 27 \times 1.73 \times 10^{-4} \times 1190 = 5.5 \text{ kg}$$

Therefore, the total mass of the crib m_o is 9.5 kg and mass ratio of wood to PMMA is 42% to 58%.

The total energy content of the wood and PMMA is

$$Q_{wood} = m_{o,wood} \times \Delta H_{c,wood} = 2.0 \times 12000 = 47.8 \text{ MJ}$$

and

$$Q_{PMMA} = m_{o,PMMA} \times \Delta H_{c,PMMA} = 5.6 \times 24900 = 138.2 \text{ MJ}$$

The total energy content of the crib Q is 186 MJ and given the crib is 1.2 × 1.2 m then this equates to a fire load energy density of 129 MJ/m^2 compared with the desired value of 110 MJ/m^2. Figure C3-6 shows the calculated HRR curve using the SFPE Handbook equations but assuming a corner ignition. The growth up to 141 s (02:21) is between Medium and Fast. The instantaneous peak HRR is 1407 kW equating to a peak HRRPUA of 977 kW/m^2, i.e., around 5.6 times greater than the desired value of 173 kW/m^2 but the calculation suggests the HRR will linearly decay after the peak.

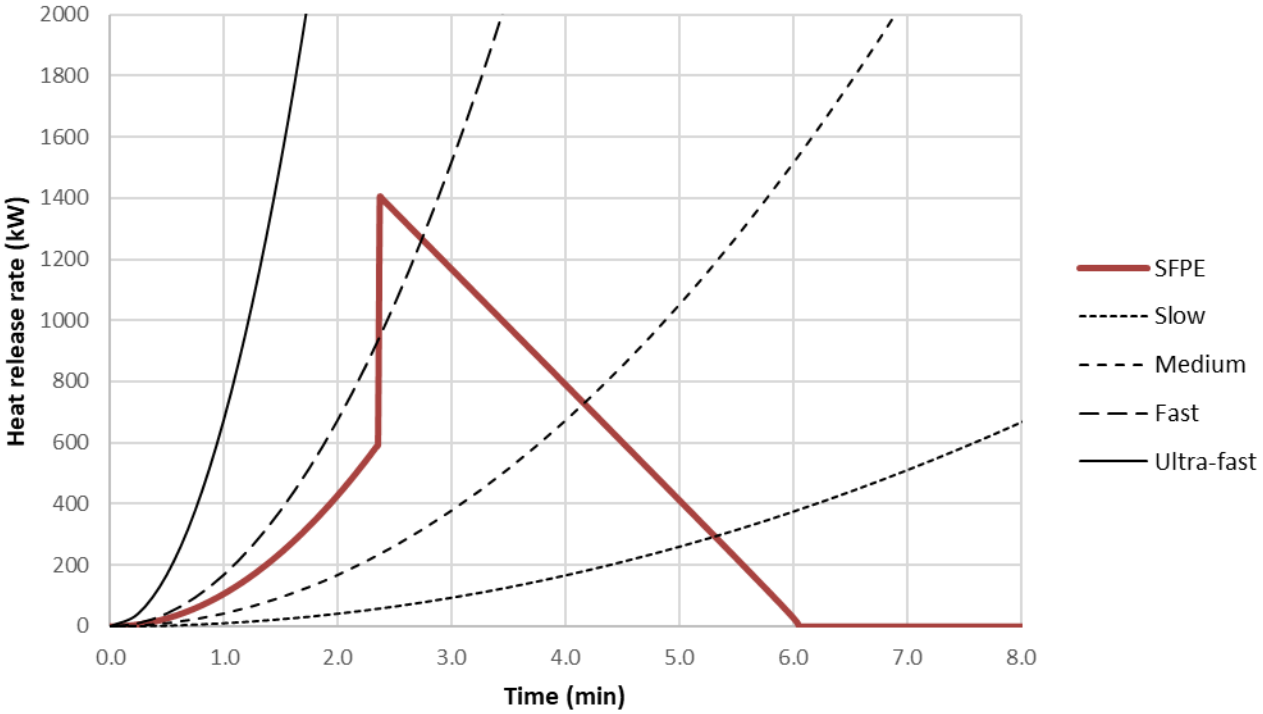

Figure C3-6 Calculated HRR for Fire Load #1 including empty balconies, using the method in the SFPE Handbook

Repeating the same procedure as above but using the survey results for balconies that only included a moveable fire load requires the FLED to be 180 MJ/m^2. By increasing the number of sticks per layers from 9 to 13 gives a 42% to 58% wood to plastic ratio, with a FLED of 187 MJ/m^2 and an instantaneous peak HRR of 1949 kW. However, as shown in Figure C3-7, the time to the peak HRR is expected to be at 205 s (03:15) compared with 141 s previously.

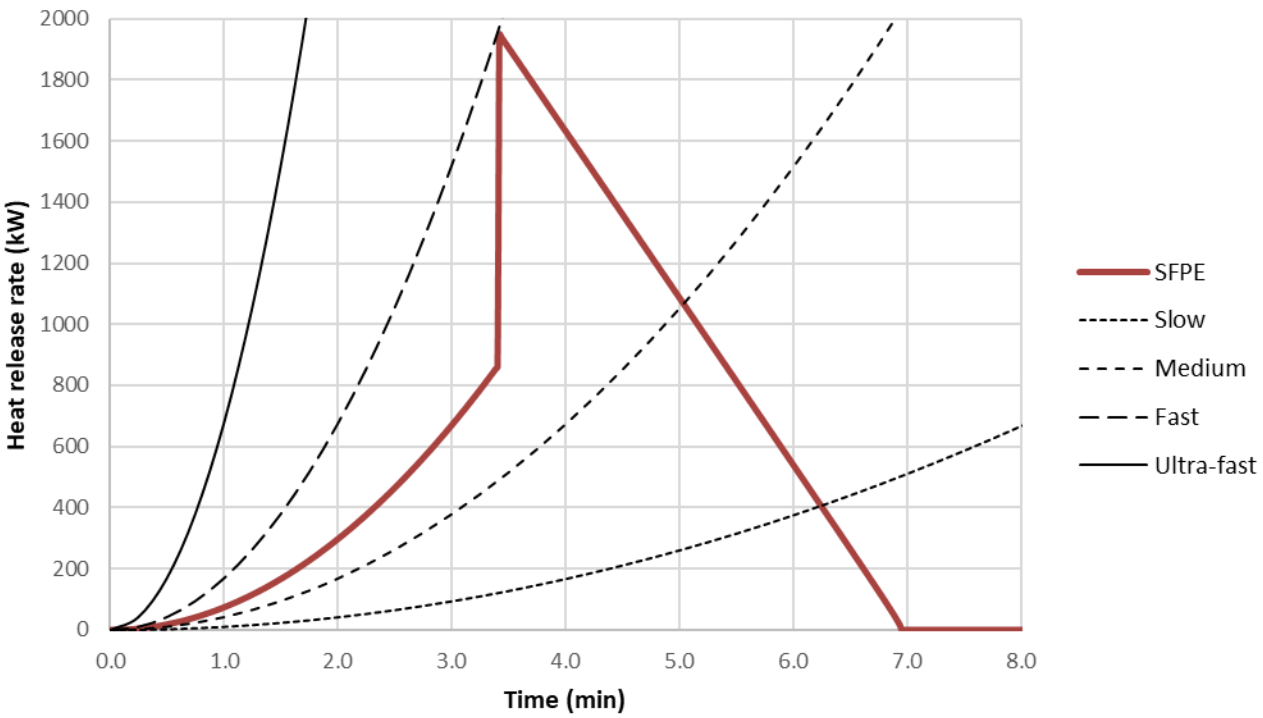

Figure C3-7 Calculated HRR for Fire Load #1 excluding empty balconies, using the method in the SFPE Handbook

C3-7.3 Fire Load #2

Instead of mixing the crib materials an alternative is to construct the crib of a single type. The regression velocity values will result in slower growth where wood is used compared with PMMA. Fire Load #2 would be a crib of 8 layers of wood with a stick cross-section D of 12 mm and a length of 1.2 m. For the case including empty balconies there would be 16 sticks per layer (n) giving a stick spacing of 67.2 mm and a total of 128 sticks. The total energy content of the crib Q is 170 MJ equating to a fire load energy density of 118 MJ/m^2. Figure C3-8 shows the calculated HRR curve using the SFPE Handbook equations but assuming a corner ignition. The growth up to 251 s (04:11) is Medium, the instantaneous peak HRR is 1435 kW equating to a peak HRRPUA of 996 kW/m^2.

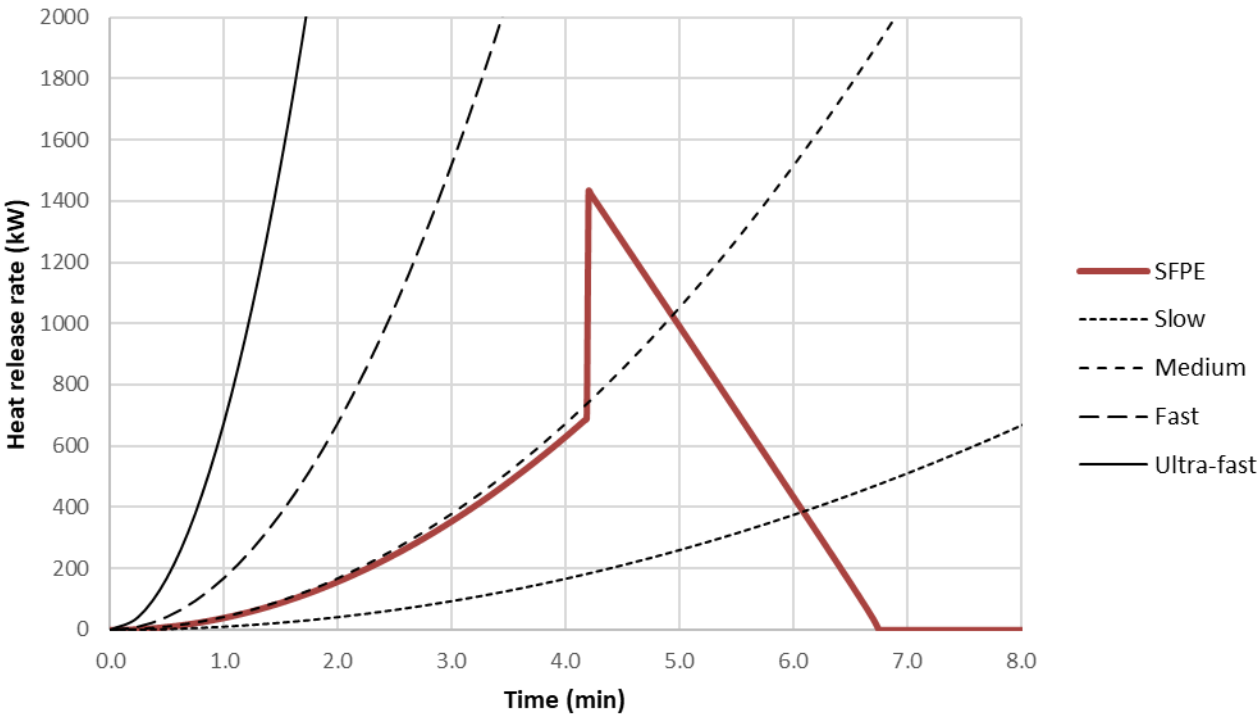

Figure C3-8 Calculated HRR for Fire Load #2 including empty balconies, using the method in the SFPE Handbook

In order to get the FLED for the survey results excluding empty balconies the number of layers can be increased to 10 with 19 sticks per layer giving 175 MJ/m^2. A peak value of 2024 kW is obtained at 300 s (05:00) as shown in Figure C3-9.

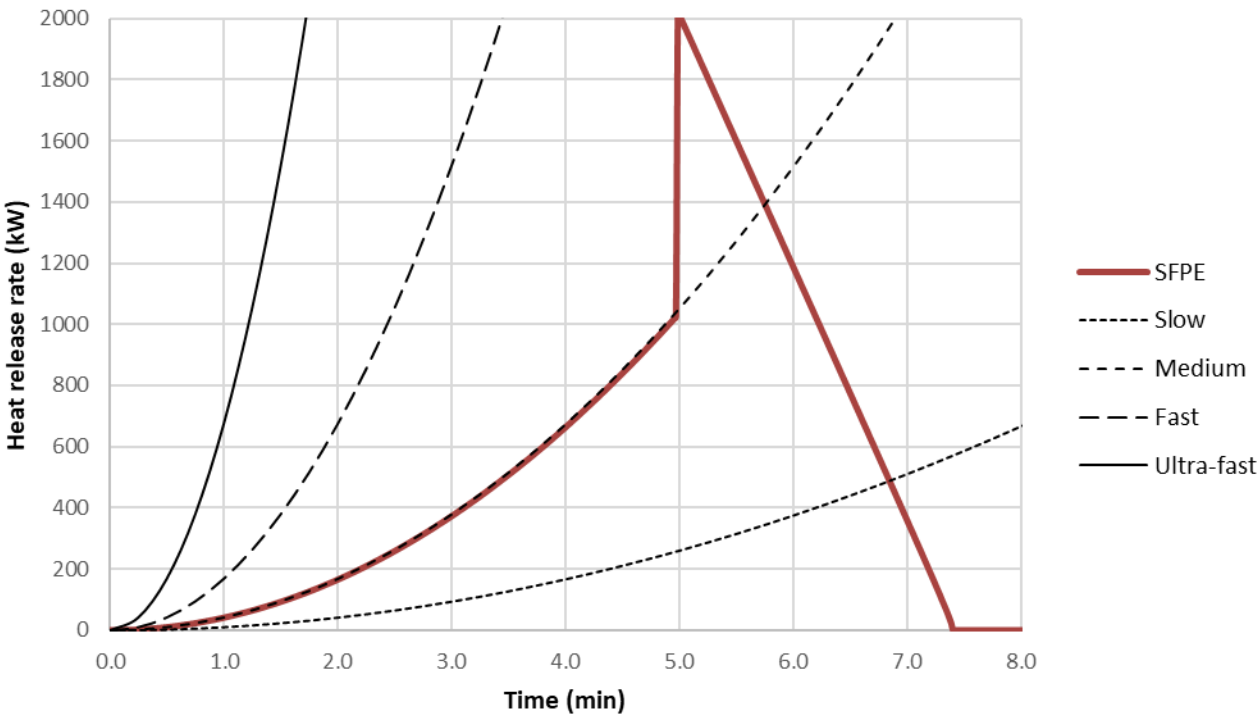

Figure C3-9 Calculated HRR for Fire Load #2 excluding empty balconies, using the method in the SFPE Handbook

C3-7.4 Other fire load options

Following on from the work carried out as part of the Smoke and Toxicity research consideration has been made on whether other materials such as polyisocyanurate insulation foam (PIR), phenolic foam and extruded polystyrene insulation (XPS).

However, preliminary calculations show that to get the appropriate ratio of wood to plastic mass (for example) 14 wood sticks to 405 XPS sticks are needed assuming the material densities are 640 kg/m^3 and 30 kg/m^3 respectively. A crib calculation of just XPS sticks only peaks at ~180 kW (Figure C3-10) with a FLED of 20 MJ/m^2 which is significantly way below the target FLED of at least 110 MJ/m^2 or up to 180 MJ/m^2.

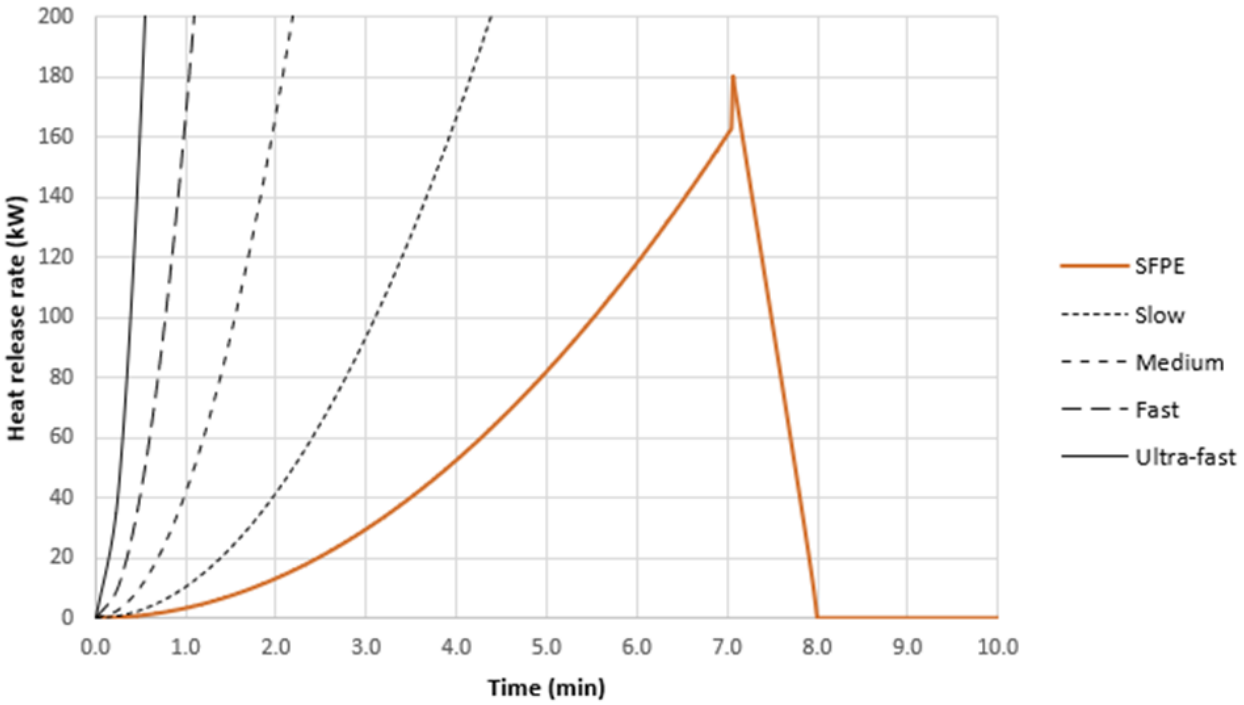

Figure C3-10 Calculated HRR for XPS crib excluding empty balconies, using the method in the SFPE Handbook

Additional calculations have been carried out using PVC as the plastic content of the cribs and it would appear this might provide a viable alternative to PMMA. A free burn test using PVC as an alternative to PMMA will be carried out. A comparison between the two tests will be made to decide which wood / plastic combination should be used thereafter.

Preliminary results suggest the PVC / wood crib rather than the PMMA / wood crib may provide reliable burning conditions. However, the results also suggest that the crib may be too low, and the footprint be too large to achieve a sufficiently representative balcony fire in terms of flame height and peak heat release rate. Consideration is being made to reduce the crib footprint but retain the same mass by halving the stick lengths and thus doubling the crib height.

C3-7.5 Conclusion

Two potential crib configurations are proposed for the representation of the 80th percentile moveable fire load on a balcony. The configurations account for the survey sample that included empty balconies or only those that had a moveable fire load present. Specifying a crib to give the desired FLED, growth rate and mixture of materials has required a modified version of the calculation given in the SFPE Handbook. As already noted, the use of the fractional reduction for ignition position and the mixing of crib materials are not within the SFPE Handbook calculation and thus care is needed. Further work outside of this report is ongoing to assess the modified method.

It is possible to obtain a FLED that closely matches the result from the balcony fire load study, however the predicted fire growth is likely to be faster than a standard Medium curve when considering the mixed-material configuration. In addition, both crib arrangements

result in peak HRRPUA at least five times larger than the desired value although according to the calculations this peak only occurs for an instant.

It is noted that the stick density of the Fire Load #1 crib configuration requires only seven layers of sticks with a spacing of 136.5 mm which may mean in practice it will be difficult to get inter-stick fire spread. Preliminary experiments will be conducted on the proposed cribs on a load cell and under an oxygen consumption calorimeter to assess their burning characteristics.

C3-8. Measurements

This section provides a description of the measurement equipment and locations of the instrumentation which are proposed to be used in the large-scale balcony experiments.

C3-8.1 Ambient conditions

The ambient conditions prior testing will be measured and recorded; temperature, humidity and air velocity. The ambient temperature prior to testing will be recorded using an ambient thermometer located at a distance of between 1 m and 3 m horizontally away from the unexposed face, and between 1 m and 3 m above the ground. This measurement should be performed not later than 5 min before the commencement of each test. The humidity will be recorded not later than 5 min before the commencement of each test using a hygrometer. The air velocity in front of the exposed façade and balconies will be taken prior commencement of each experiment. Measurements will be taken using an anemometer located at a distance of 1 m horizontally away from the crib source, and at each balcony's floor level.

C3-8.2 Heat release rate

The assembly is to be placed under a 9 m × 9 m oxygen depletion system exhaust hood for measuring the heat release rate. Hence, measurements of CO, CO_2, O_2 and smoke produced during the combustion will be collected in the hood.

C3-8.3 Mass loss of fuel

In order to measure the mass loss of the crib, a weighing load cell platform with an accuracy of ± 1 % of total load of the crib will be used to measure continuously the mass loss of the crib throughout the fuel source combustion period. The scale will be located centrally on the ground floor or first floor balcony of the rig depending on the specific experiment. The scale will be protected with a silicate panel or similar. The weighing data will be continuously recorded every 1-3 s.

C3-8.4 Heat flux measurements

Measurements of heat flux will be taken using both plate thermometers (PT) and Gardon Gauges (GG) for comparison (Figure C3-11). The PTs will be designed according to EN 1363-1 and oriented so that their metal side faces towards the point of measurement.

C3-8.4.1 Heat Flux measured around the crib

Three PTs and three 1.5 mm diameter Inconel thermocouples will be positioned at a distance of 1 m from the front side of the crib and 1 m from each side. Their location

vertically will be at mid-height of each floor level; 1350 mm above each floor level. The PT located in front of the crib will be placed next to a GG heat flux meter for comparison purposes.

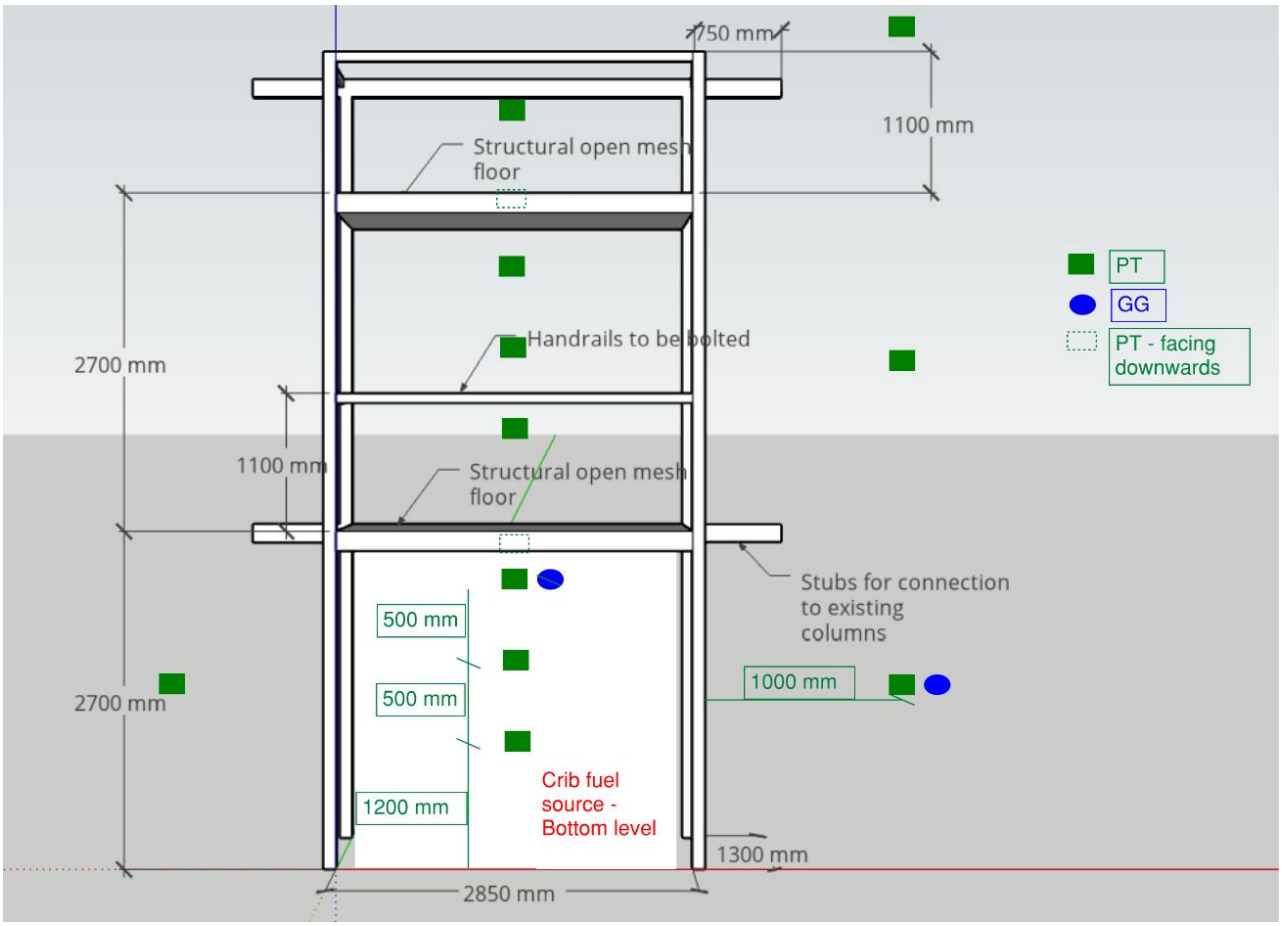

Figure C3-11 Balcony configuration with radiant flux instrumentation layout, crib located on the ground floor

C3-8.4.2 Heat Flux measured on the façade

On the surface of the bottom balcony level, on the centre line, three PTs and three 1.5 mm diameter Inconel thermocouples will be installed. The first plate thermometer will be placed at 1200 mm from the floor level, where the other two will be installed at a distance of 500 mm and 1000 mm above the first one. The PT located at 1000 mm above the first one shall be next to a GG heat flux meter for comparison purposes. The same sensors will be used on the middle level but only the bottom PT to be used on the upper level.

In addition, two PTs will be installed at 1m from each side of the balcony on the bottom level. The PT located in the right-hand side shall be next to a GG heat flux meter for comparison purposes. Considering the expected symmetry of flames impinging on the façade, PTs will be installed only on the right-hand side from the balconies on the two upper levels; 1000 mm on the side and 1350 mm above the floor level.

C3-8.4.3 Heat Flux measured under the balconies

Under the ceiling of the two balconies, two PTs shall be placed on the central axis facing downwards. They will be located at 450 mm and 900 mm from the exposed face of the façade.

C3-8.5 Temperatures

Temperature measurements of hot gases and flames will be performed using thermocouples (TCs) on the centreline above the front handrails on each balcony (Figure C3-12). Three TCs will be located at 500 mm, 1000 mm and 1500 mm above the handrails on each balcony level. In addition, another three TCs will be placed at 500 mm distance horizontally from the centreline at the same heights. Considering the expected symmetry of flames impinged on the façade, on the two upper levels, only the horizontal axis TCs on one side along will be used.

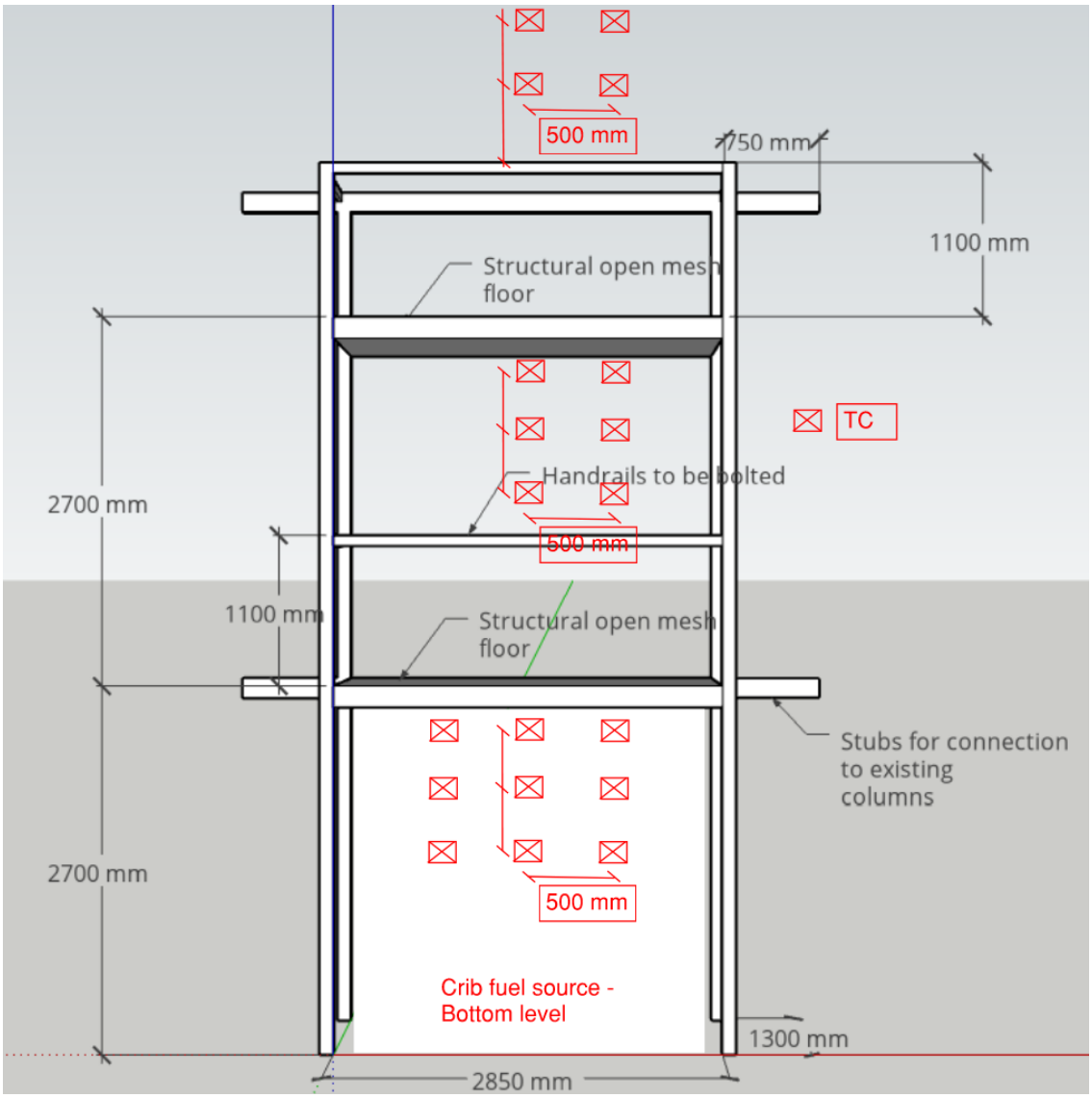

Figure C3-12 Balcony configuration with thermocouple layout, crib located on the ground floor

It is unclear whether measuring the temperature of any solid elements in the balcony or the façade will be particularly useful. This is open for further discussion.

C3-8.6 Video recordings

Cameras will be placed facing the front, the side and at a 45 degree angle in front of the façade to record the experiments and enable post-experiment analysis on the flame characteristics.

C3-9. New Zealand prescriptive requirements for balconies

The New Zealand building regulatory system for fire safety includes a prescriptive set of 'deemed-to-satisfy' requirements in addition to the ability to meet the regulations using a Verification Method, or through specific design. The prescriptive requirements are set out in C/AS2 [7], and in relation to balconies this document contains several clauses specific to means of escape and construction.

Clause 3.11.5 b) on separation by fire rated construction states:

> "*If the escape route is a balcony with a single direction of escape, and the vertical distance between the underside of the balcony and the closest unprotected area in the external wall below is less than 5.0 m* […], *balcony barriers shall:*
>
> *(i) have no openings, and*
> *(ii) for risk group SI be protected with a material having a Group Number of 1, and*
> (iii) *for all other risk groups (SM, CA, WB, WS and VP) achieve a Group Number no greater than 2*".

The Clause 3.11.6 on ventilation openings states:

> "*The open area of a balcony or bridge shall be no less than 50% of the balcony floor area, and shall be evenly distributed along the open sides and any approach ramp (see Figure 3.21). Where an escape route on a balcony is served by an open stairway, similar ventilation shall be provided on the stairway. Open sides shall not be enclosed, except that a fixed open grille may be used if it provides the required free air space.*"

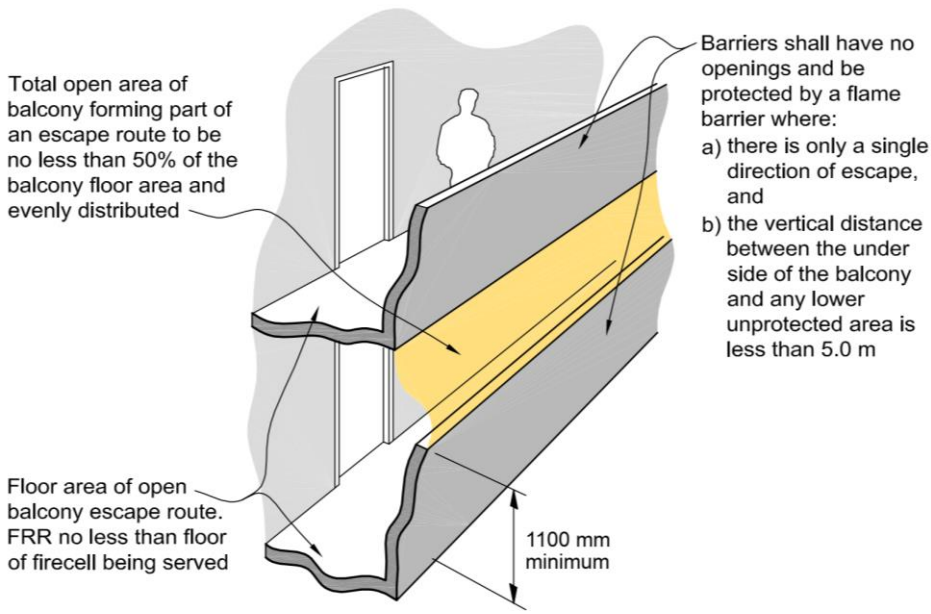

Figure C3-13 Figure 3.21 from C/AS2 [7]

C3-10. References

[1] I. Rickard, M. Spearpoint, and S. Lay, ‘The performance of laminated glazing subjected to constant heat fluxes related to building fires’, *Fire and Materials*, vol. 45, no. 2, pp. 283–295, 2020, doi: 10.1002/fam.2939.

[2] BSI, ‘BS 8579:2020 - Guide to the design of balconies and terraces’, BSI, London, 2020.

[3] C. Murad, H. Doshi, and R. Ramakrishnan, ‘Impact of insulated concrete curb on concrete balcony slab’, *Procedia Engineering*, vol. 118, pp. 1030–1037, Jan. 2015, doi: 10.1016/j.proeng.2015.08.545.

[4] V. Babrauskas, ‘Burning rates’, in *SFPE Handbook of Fire Protection Engineering*, Springer, 1995.

[5] M. Spearpoint, C. Hopkin, Y. Muhammad, and W. Makant, ‘Replicating the activation time of electronically controlled watermist system nozzles in B-RISK’, *Fire Safety Journal*, vol. 130, p. 103592, Jun. 2022, doi: 10.1016/j.firesaf.2022.103592.

[6] D. Drysdale, *An Introduction to Fire Dynamics*, Third Edition. John Wiley & Sons, Ltd, 2011. doi: 10.1002/9781119975465.ch1.

[7] MBIE, ‘C/AS2, Acceptable Solution for Buildings other than Risk Group SH for New Zealand Building Code Clauses C1-C6 Protection from Fire, Amendment 2’, Ministry of Business, Employment and Innovation, Wellington, New Zealand, Nov. 2020.

APPENDIX C4:
Full-scale balcony fire demonstration tests

Authors: M Spearpoint[1], K Chotzoglou[2], D Hopkin[1]

Reviewer: L Bisby[3]

[1]OFR, [2]Efectis, [3]University of Edinburgh

Contents

C4-1. Introduction 1
C4-1.1 Background 1
C4-1.2 Test programme 4
C4-2. Test fuel loads 6
C4-2.1 Initiating source 6
C4-2.2 Balcony contents 7
C4-2.2.1 Crib design 1 8
C4-2.2.2 Crib design 2 10
C4-2.2.3 Crib design 3 12
C4-2.2.4 Summary 14
C4-3. Balcony design details 17
C4-3.1 Design and structure of balconies 17
C4-3.2 Moveable fire load crib 19
C4-3.3 Decking 19
C4-3.3.1 Non-combustible decking 19
C4-3.3.2 Combustible wood decking 20
C4-3.4 Balustrade 20
C4-3.4.1 Open 20
C4-3.4.2 Laminated glass 21
C4-3.4.3 High-pressure laminate (HPL) 23
C4-3.5 Soffit 24
C4-4. Instrumentation and measuring locations 26
C4-5. Observations 28
C4-5.1 Test A – Baseline 28
C4-5.2 Test B – Moveable fire load 29
C4-5.3 Test C – Exposed timber decking 30
C4-5.4 Test D – Laminated glass balustrade 31
C4-5.5 Test E – Laminated glass balustrade and moveable fire load 32
C4-5.6 Test F – Timber decking with non-combustible soffit 33
C4-5.7 Test G – Exposed timber decking and HPL balustrade 34
C4-5.8 Test H – Timber decking with non-combustible soffit and HPL balustrade 36

C4-6. Analysis 38
C4-6.1 Heat release rate 38
C4-6.2 Total energy release 40
C4-6.3 Heat flux 42
C4-6.4 Fire spread 46
C4-6.4.1 Upward 46
C4-6.4.2 Downward 48
C4-6.4.3 Lateral 50
C4-6.5 Vertical flame extension 53
C4-6.6 Non-combustible soffit panels 54
C4-6.7 Heat flux to balcony soffits 54
C4-6.8 Balcony steel temperatures 57
C4-6.9 Equivalent duration of furnace exposure to Balcony 1 steel members 60
C4-6.9.1 Equivalent cumulative radiative heat flux dose method 61
C4-6.9.2 Equivalent net heat flow method 62
C4-7. Discussion 64
C4-7.1 Acceptable fire spread rate 64
C4-7.1.1 Vertically 64
C4-7.1.2 Horizontally 65
C4-7.2 Ranking 66
C4-7.3 Implications for structural stability 68
C4-7.4 Equivalent duration of furnace exposure for steel elements and implications for structural fire resistance 70
C4-7.5 Limitations 70
C4-8. Conclusions 72
C4-9. Further work 76
C4-10. Acknowledgements 77
C4-11. References 78

Figures

Figure C4-1 Potential fire spread scenarios 4
Figure C4-2 Heat release rate of the BS 8414 crib in free burn conditions 7
Figure C4-3 Layout of Crib 1 consisting of alternate layers of PMMA and wood sticks 9
Figure C4-4 Extent of fire spread in Crib 1 after around 25 min from ignition 10

Figure C4- 5 Layout of Crib 2 consisting of alternate layers of uPVC and wood sticks 11
Figure C4-6 Crib 2 at approximately the point of peak heat release rate 12
Figure C4-7 Layout of Crib 3 consisting of alternate layers of uPVC and wood sticks 13
Figure C4-8 Crib 3 at close to the point of peak heat release rate in which flames would likely extend to an upper balcony 14
Figure C4-9 Summary of the three crib tests (a) mass loss (b) heat release rate (c) heat flux at 1 m distance, for the first 20 min after ignition 15
Figure C4-10 Calculated heat release rates of the cribs using mass loss rate and weighted heat of combustion 16
Figure C4-11 Arrangement of the combustion chamber, BS 8414 crib and the position of the moveable fire load crib 17
Figure C4-12 Primary balcony rig dimensions with steel frame elements identified 18
Figure C4-13 Photograph of the balcony rig prior to the creation of the combustion chamber 19
Figure C4-14 Examples of balustrades that are likely act as a partial obstruction (top) or could be considered open (bottom) 21
Figure C4-15 Installation of the laminated glass balustrade 23
Figure C4-16 Installation of the HPL balustrade panels 24
Figure C4-17 Photographs of the non-combustible soffit panels used in Tests E and F 25
Figure C4-18 Instrumentation plan 27
Figure C4-19 Test A at the point of peak burning at around 20:00 after ignition..... 28
Figure C4-20 Key events during Test B 29
Figure C4-21 Key events during Test C 30
Figure C4-22 Key events during Test D 31
Figure C4-23 Key events during Test E 32
Figure C4-24 Key events during Test F 33
Figure C4-25 Key events during Test G 34
Figure C4-26 Key events during Test H 36
Figure C4-27 Overall comparison of heat release rate measurements 38
Figure C4-28 Pairwise comparison of heat release rate measurements 39
Figure C4-29 Measured heat flux at the balcony edge at the indicated nominal locations . 42
Figure C4-30 Violin graph comparing measured heat flux at the balcony edge at the indicated locations for the first 20 min of each test 43
Figure C4-31 Measured heat flux at the façade wall at the indicated locations 44
Figure C4-32 Violin graph comparing measured heat flux at the façade wall at the indicated locations for the first 20 min of each test 45
Figure C4-33 Pairwise comparison of the wall heat flux at Level (i) over the first 20 min ... 46
Figure C4-34 Measured heat flux facing the left-hand side of each balcony level 51
Figure C4-35 Views of the left side of the balconies in Tests C, G and H 52

Figure C4-36 Thermocouple readings at the front balcony edge (a) Test A (b) Test D 53
Figure C4-37 Location of balcony underside PTs 55
Figure C4-38 Heat flux to undersides of Balconies 1 and 2 56
Figure C4-39 TCs to central steel beam on Balcony 1 57
Figure C4-40 Balcony 1: central steel beam temperature with time 58
Figure C4-41 Balcony 1: central steel beam temperature violin plot for the first 20 min from ignition 59
Figure C4-42 Extract from National Annex to EN 1993-1-2 – default limiting temperatures 60
Figure C4-43 Exposure energy vs. time using the cumulative radiative heat flux dose 61
Figure C4-44 Net heat flow versus time for calculation of equivalency 63
Figure C4-45 Range of FIGRA values for Tests B to H 67
Figure C4-46 Violin plot of incident heat flux to balcony soffits for each test for the time range of 10 – 30 min from crib ignition 69

Tables

Table C4-1 Summary of programme of tests 5
Table C4-2 Total energy content of the moveable fire load cribs 16
Table C4-3 Specification of laminated glass balustrade components 22
Table C4-4 Properties of the HPL panel material 23
Table C4-5 Calculated available energy content, excluding the BS 8414 crib 40
Table C4-6 Estimated and measured energy release compared to the calculated available energy content, including the BS 8414 crib 41
Table C4-7 Approximate ignition times of balcony cribs 47
Table C4-8 Approximate ignition times of timber decks 47
Table C4-9 Approximate ignition times of HPL balustrade panels 48
Table C4-10 Times at which the wall façade first achieved a heat flux of 12.6 kW/m^2 48
Table C4-11 Summary of approximate times when falling balustrade material was first observed 50
Table C4-12 Times at which a heat flux of 12.6 kW/m^2 was first achieved at the left-hand balcony locations 52
Table C4-13 Time of fire spread from Balcony 1 to Balcony 2 65
Table C4-14 Time difference between the wall and lateral heat fluxes to reach 12.6 kW/m^2 on each balcony level 66
Table C4-15 Fire spread performance ranking of tests using mean FIGRA values 67
Table C4-16 Qualitative ranking of fire spread performance of tests 68
Table C4-17 Manual performance ranking of tests and likely positions of other selected scenarios 68

C4-1. Introduction

C4-1.1 Background

This report forms part of a broader project to examine the potential fire safety impacts of the use of balconies, spandrels and laminated glass in buildings. This project provides evidence to the Building Safety Regulator (BSR) within the Health and Safety Executive (HSE) on which to consider any potential future technical changes to Approved Document B (AD B) and Regulation 7 in support of the Building Regulations in England.

This report provides the findings from the testing programme that contributes to an understanding of storey-to-storey fire spread between projected balconies located on the external wall (façade) of a building. A review of the literature related to current balcony, spandrel and laminated glass technologies that are used by industry is presented in **Appendix A/B**. Details of the balcony fire demonstration test methodology and matrix have been developed previously in **Objective C3** (see Appendix C3). In addition, the work on balcony fuel loads is discussed in **Objective C1** (see Appendix C1) and the performance of laminated glass panels in small-scale radiant panel experiments is discussed in **Objective C2** (see Appendix C2). The results from the balcony fuel load survey have also been published in the literature [1] in which some further analysis is provided. Related to this study is the multi-balcony fire that occurred at Hallam Court in Croydon on 7th June 2023 which is reported in a separate document and was produced as part of OFR's engagement in the 'Real Fires' contract.

The tests have been designed to examine fire spread in credible worst-case conditions that might result from flames projecting from a window opening (Figure C4-1). The balcony configurations are not intended to represent every possible combination of balcony and fuel characteristics as it would be impractical to investigate all variables within the constraints of the project resources.

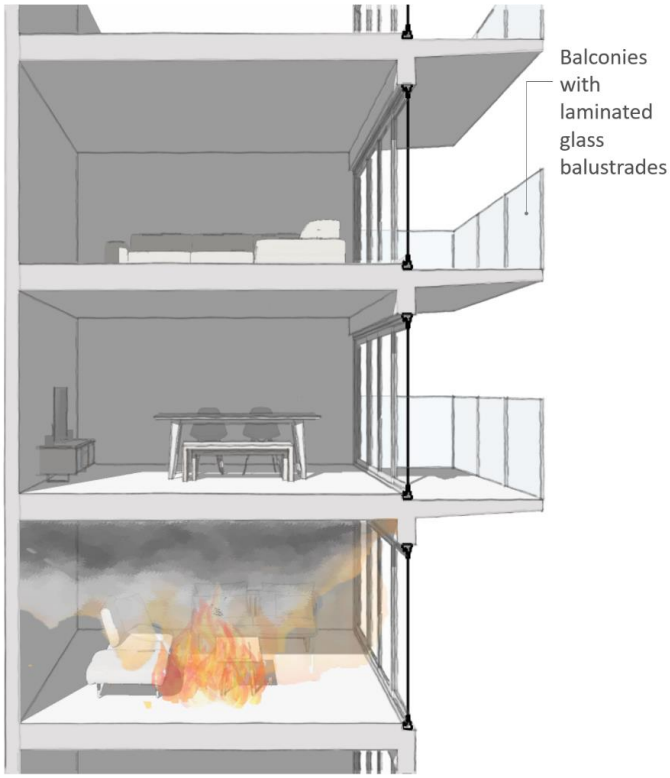	**1. Fire in a building** Fire develops within one of the enclosures inside the building.
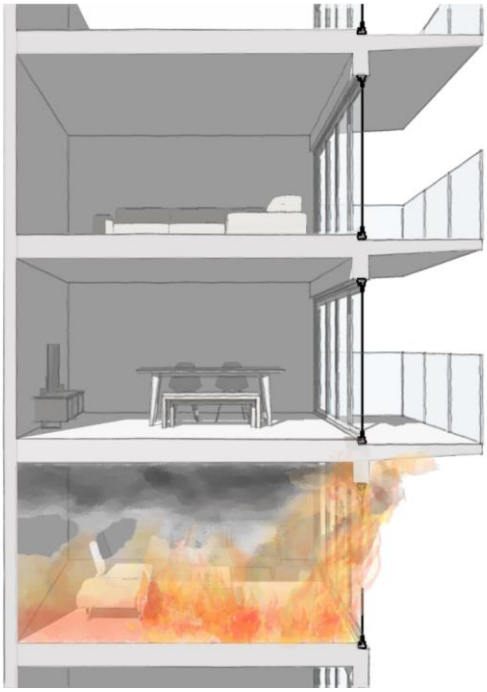	**2. Failure of external glazing** One or more external glazing elements (i.e. windows and/or doors) fails allowing flames to break out of the enclosure. Depending on the characteristics of the fire in the enclosure, the geometry of the opening, and the arrangement of the balcony, the flame extension may be limited to the underside of the balcony.

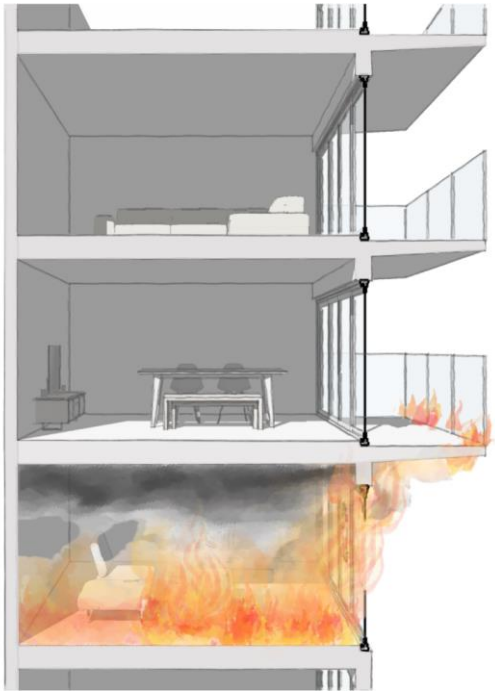	**3. Ignition of balcony elements** Flames from the enclosure fire have the potential to ignite combustible elements associated with the balcony. Combustible elements could include the balustrade, the decking material and/or the balcony contents.
	4. Fire growth and fire spread Where combustible elements associated with the balcony ignite and burn then this could lead to further fire growth on the balcony and spread to other balconies and/or compartments.

	5. Continued flame spread remote from enclosure The fire may continue to spread upwards or sideways via direct flame contact etc. Fire may also spread downwards due to burning falling and/or dripping materials.

Figure C4-1 Potential fire spread scenarios

C4-1.2 Test programme

Table C4-1 summarises the test programme that has been undertaken. The comments describe the objective of each non-standardised test in relation to the balcony floor construction, balustrade materials and the presence (or not) of fuel targets located on the balconies.

The appendices of this report have been supplied by Efectis. Each appendix shows the detailed locations of the instrumentation, photographs from the tests, and measurements recorded. Some of this information is repeated in the main body of this report and is subject to further analysis. In addition, video recordings from the front and the side of the rig were made of each test and these were used to inform the contents of this report.

Table C4-1 Summary of programme of tests

Test ID	Balcony floors	Balustrade	Fuel targets	Comments
A	Non-combustible	Open	None	Baseline test to characterise the thermal environment such as heat fluxes, etc. when only the initiating fire source was present
B	Non-combustible	Open	Cribs on each balcony	Assessment of fire spread between fuel load on each balcony
C	Exposed timber decking	Open	Cribs on each balcony	Assessment of contribution to fire spread of exposed timber decking combined with balcony fuel load
D	Non-combustible	Laminated glass	None	Assessment of contribution to fire spread of laminated glass balustrades
E	Non-combustible	Laminated glass	Cribs on each balcony	Assessment of contribution to fire spread of laminated glass balustrades combined with balcony fuel load
F	Timber decking with non-combustible soffit	Open	Cribs on each balcony	Assessment of contribution to fire spread of timber decking protected by non-combustible soffit
G	Exposed timber decking	HPL	None	Assessment of contribution to fire spread of HPL balustrades combined with exposed timber decking
H	Timber decking with non-combustible soffit	HPL	None	Assessment of contribution to fire spread of HPL balustrades combined with timber decking protected by non-combustible soffit

Note: Tests F and G have been included through BSR's 'Real fires' research programme.

C4-2. Test fuel loads

Where a building consists of balconies located next to an external wall, it is possible that fire could initiate in the balcony contents or alternatively a fire could start in an internal space and spread to the balconies (as already illustrated in Figure C4-1). Fires could also spread from balconies to internal spaces, or possibly fires could spread between spaces without involving the balconies. Of these various scenarios it is judged that a fire starting within an internal space would expose balconies to the more onerous conditions when compared to a fire that starts on a balcony. Thus, conducting the full-scale balcony tests has required that the fuel load representing the initiating fire and the fuel load on the balconies be specified. These are discussed in more detail below.

C4-2.1 Initiating source

The scenario in which a fire develops within a room where flames then project through an already open or thermally broken external glazing such as windows or balcony access doors is already essentially addressed as part of the assessment of external walls (façades) through various standardised test protocols. One of these protocols is the BS 8414 [2], [3] test which is the subject of extensive work on behalf of BSR as part of a separate ongoing research project on external wall systems (CPD 004/121/108), also being led by OFR. That work has carried out an assessment of the characteristics of the BS 8414 fire in terms of heat release rate, thermal exposure conditions, etc.

The BS 8414 fire source consists of a timber crib of alternating layers of sticks with a 50 × 50 mm cross-section, that are either 1000 or 1500 mm long, with ten sticks per layer. The first layer consists of ten 1500 mm long sticks with equal width gaps between each stick. The second layer then consists of fifteen 1000 mm long sticks laid in the opposite direction to the first layer, again with equal width gaps. The alternating layering is repeated for the remaining eighteen layers to give a completed crib of overall nominal dimensions 1000 mm wide × 1500 mm long × 1000 mm high. For the standard BS 8414 protocol the wood crib is placed into a recessed combustion chamber at the base of the wall system under test.

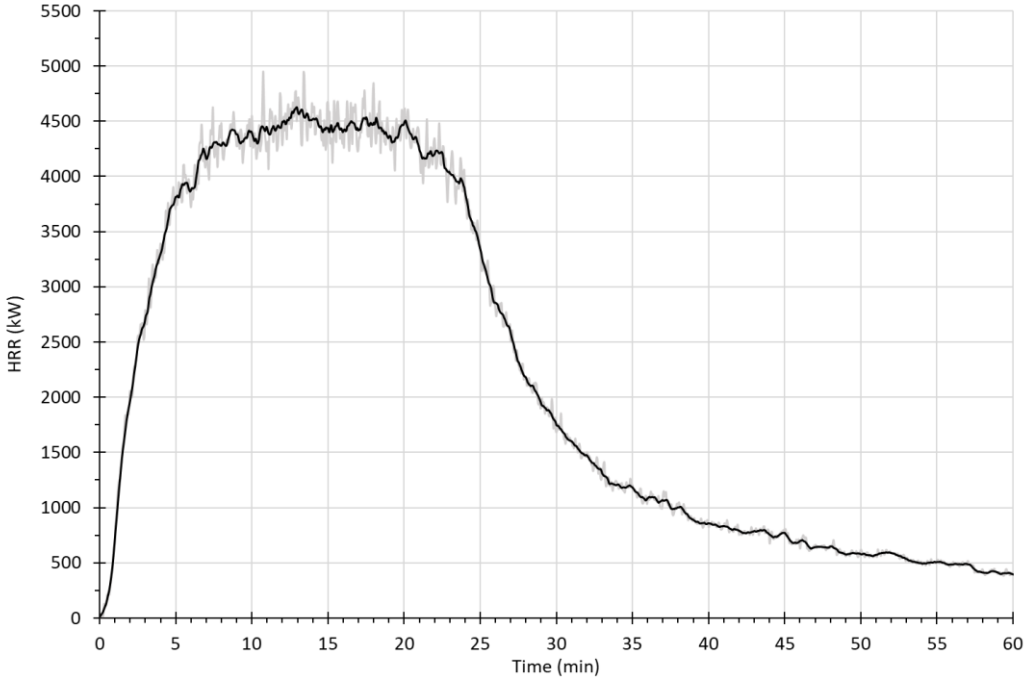

Figure C4-2 Heat release rate of the BS 8414 crib in free burn conditions, light line are the original measurements, dark line are smoothed results

Previous measurements as part of the separate external wall systems research have shown that the BS 8414 crib provides a heat release rate that reaches a peak steady state of around 4.5 MW between approximately 8 min and 20 min after ignition (Figure C4-2). The total energy released by the crib was around 8000 MJ. When the crib is placed into the combustion chamber, the heat fluxes to the façade peak at around 70 – 80 kW/m^2, ca 1.0 m above the chamber.

C4-2.2 Balcony contents

There are pros and cons of using 'real' items for the representation of the balcony contents. Clearly real items will more closely match what might be found on a balcony, noting the wide range of items identified in the balcony fuel load survey discussed in **Appendix C1**. However, using 'real' items raises several questions such as which items to use, where to place them, which to ignite and how, will all of the items eventually ignite during a test, how repeatably would the items burn. Alternatively, an idealised fuel package, such as a crib, addresses some of the previous points such as repeatability, although it would no longer closely match actual balcony contents. For the purposes of this study, it was decided to use cribs for the sake of repeatability.

The balcony fuel load survey identified a mixture of wood-based and plastic-based items on balconies. To represent this 40% to 60% mixture, the decision was made to use cribs that consisted of wood and plastic to closely match the wood-to-plastic ratio found in the survey. The survey found that, conservatively excluding empty balconies, the 80th percentile fire load energy density was 178.9 MJ/m^2, and heat release rate per unit area was estimated to be 308.9 kW/m^2 with a medium t-squared fire growth rate being reasonable. The survey also suggested that a balcony that is 2.85 m wide and 1.3 m deep would provide representative dimensions.

In specifying the crib to represent the balcony contents, the selection of stick cross-section, length and spacing had to consider the desired total energy content, and the desired peak rate of heat release. It also needed to achieve a reasonably large coverage area on the balcony and generate a flame height that would be sufficient to extend upwards to the next balcony above. Inevitably the design of the crib had to be a compromise between these factors.

As discussed below, three crib designs were investigated in terms of the plastic material and also the configuration of the crib to meet the desired fire characteristics. Relatively high-density plastic materials were selected for the cribs as low-density plastic materials would need many sticks to get the desired wood-to-plastic ratio and would also likely burn away rapidly thereby leaving only the wood sticks.

In each test the crib was placed on a non-combustible platform on a load cell to measure its mass loss from which a heat release could be calculated. The heat release rate was also directly measured via oxygen consumption calorimetry. Radiant heat flux was measured with a Gardon gauge located 1 m away from the edge of the crib adjusted to the mid-height position relative to the top of the load cell platform. Measurements recorded from the three crib tests are summarised in Section C4-2.2.4.

C4-2.2.1 Crib design 1

The initial crib design used a mixture of 3 layers of PMMA and 4 layers wood sticks (Figure C4-3), density 1190 kg/m^3 and 500 kg/m^3 respectively. The sticks were arranged in alternate layers with a stick cross-section of 12 mm and a length of 1200 mm. Each layer consisted of 9 sticks giving a spacing of 136.5 mm and a total of 63 sticks (36 sticks of wood and 27 sticks of PMMA).

The heat of combustion of the wood and PMMA were 18.5 MJ/kg and 24 MJ/kg respectively, measured with a bomb calorimeter according to ISO 1716 [4]. The calculated total energy content of the crib is 191 MJ and given the crib is 1.2 $\times$ 1.2 m then this equates to a fire load energy density (FLED) of 133 MJ/m^2 compared with the desired value of around 180 MJ/m^2. In terms of a representative balcony with an area of 2.85 $\times$ 1.30 = 3.71 m^2 this would equate to 191 / 3.71 = 52 MJ/m^2.

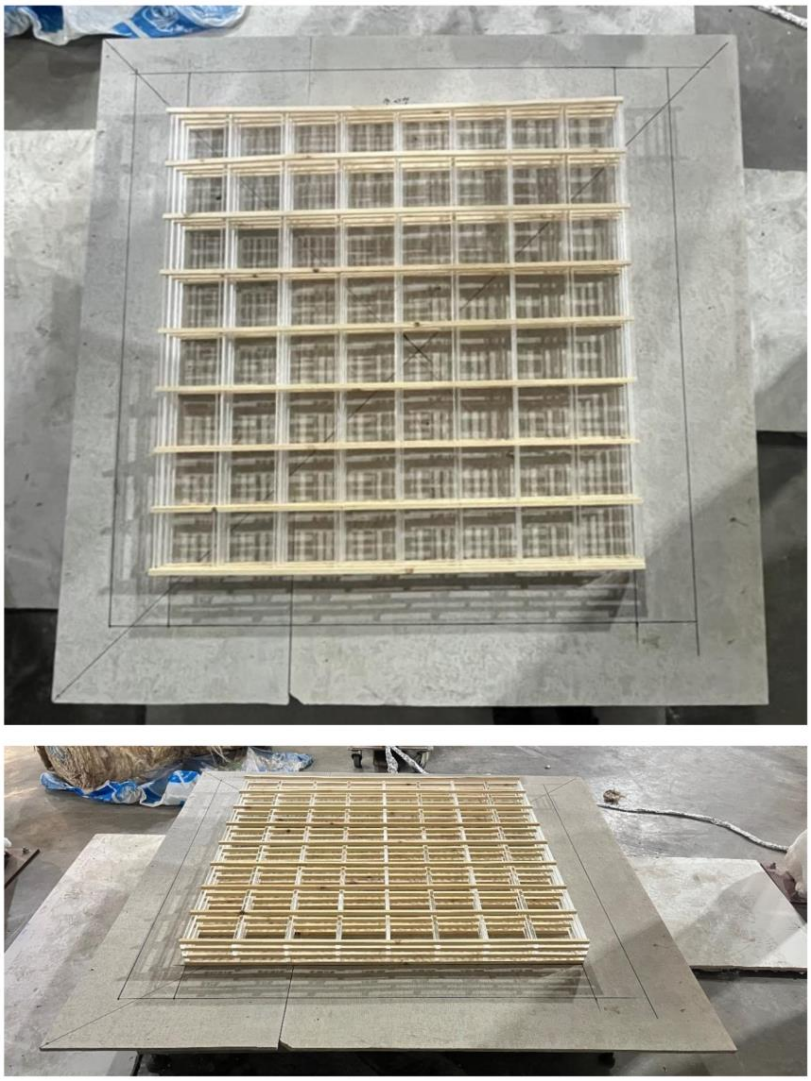

Figure C4-3 Layout of Crib 1 consisting of alternate layers of PMMA and wood sticks

The crib was ignited using cotton wool balls soaked in heptane and placed between the sticks at one end of the crib. In general, the fire spread slowly through the crib for around 40 min with the heat release rate reaching a steady state of between 59 kW and 66 kW. Figure C4-4 is a photograph of the burning of the crib at around 25:00 after ignition showing that the crib still was not fully involved and also the low flame height. A peak radiant heat flux of around 0.8 kW/m^2 was measured.

The crib configuration provided a relatively large footprint, but the rate of heat release and flame height were too low, and the burning duration too long for the purposes of the full-scale balcony fire tests. In addition, the total mass of the crib was not sufficient to represent a fuel load as determined from the balcony fuel load survey.

Figure C4-4 Extent of fire spread in Crib 1 after around 25 min from ignition

C4-2.2.2 Crib design 2

Crib 2 consisted of 4 layers of wood and 3 layers of uPVC (Figure C4- 5) with a stick cross section of 12 mm and a length of 1200 mm. Each layer consisted of 24 sticks giving a spacing of 39.7 mm and a total of 168 sticks (96 sticks of wood and 72 sticks of uPVC in alternate layers). uPVC was selected over PMMA to generate smoke and species emissions that could be used in a parallel BSR project on smoke toxicity. Further details of the smoke toxicity project are not discussed in this report.

The density of the uPVC was 1420 kg/m^3 and the heat of combustion was 19.74 MJ/kg using a bomb calorimeter according to ISO 1716. Like the calculations given for Crib 1, the total energy content is 502 MJ giving a FLED of 349 MJ/m^2 over the area of the crib or 135 MJ/m^2 over a representative balcony compared with the 80th percentile FLED of 178.9 MJ/m^2 from the balcony fuel load survey.

To allow the fire to completely involve the crib earlier than in Crib 1, it was ignited using 46 strips of low-density fibreboard of dimension 8 $\times$ 8 mm and 600 mm length soaked in 2 L of white spirit. The ignition strips were insert from both sides allowing a uniform ignition of the crib. The ignition sticks were cut at 600 mm lengths due to their thickness. To ensure the ignition of the 2 $\times$ 600 mm strips, ignition was performed from both ends to ensure a uniform burn.

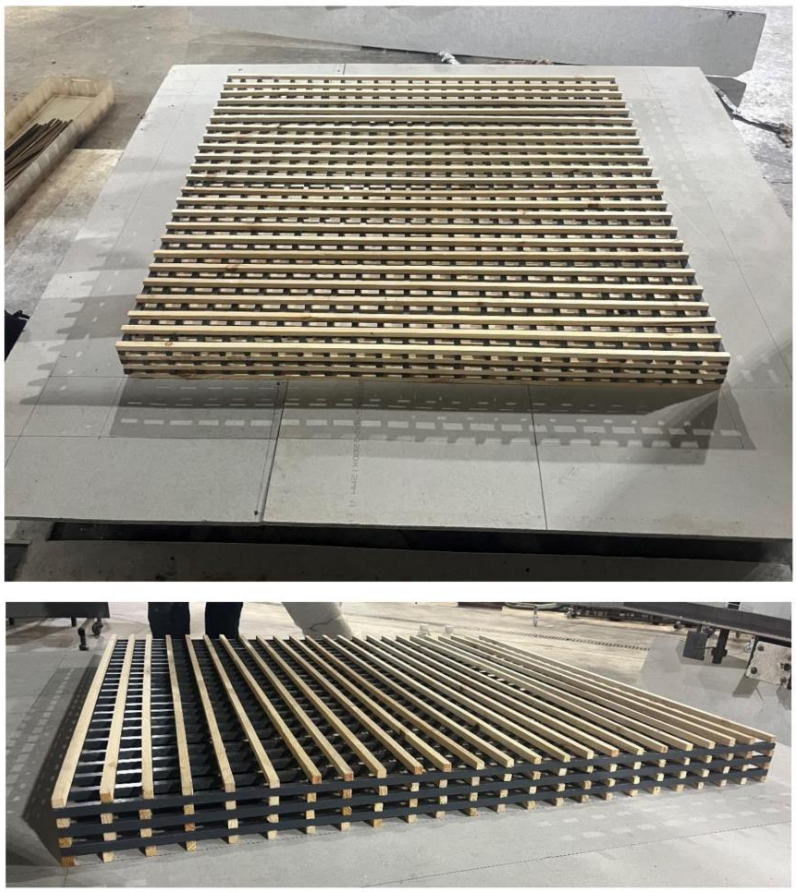

Figure C4- 5 Layout of Crib 2 consisting of alternate layers of uPVC and wood sticks

Crib 2 burned with a higher peak heat release rate of around 700 kW after 3 min which then decayed to a steady state of 200 kW by 13 min after ignition. Radiant heat flux measurements peaked at 4 kW/m^2. Crib 2 gave a fire that was deemed more representative of a balcony fire (Figure C4-6) compared to Crib 1. However, the maximum flame height was considered to be too low to impact on the underside of an upper balcony.

Figure C4-6 Crib 2 at approximately the point of peak heat release rate

C4-2.2.3 Crib design 3

Crib 3 consisted of 16 layers of wood and 15 layers of uPVC with a stick cross section of 12 mm and a length of 600 mm (Figure C4-7). Each layer consisted of 12 sticks giving a spacing of 41.45 mm and a total of 372 sticks (192 sticks of wood and 180 sticks of uPVC). For Crib 3 the total energy content is 589 MJ giving a FLED of 1,636 MJ/m^2 over the area of the crib or around 160 MJ/m^2 over a representative balcony vs the 80th percentile FLED of 178.9 MJ/m^2 from the balcony fuel load survey.

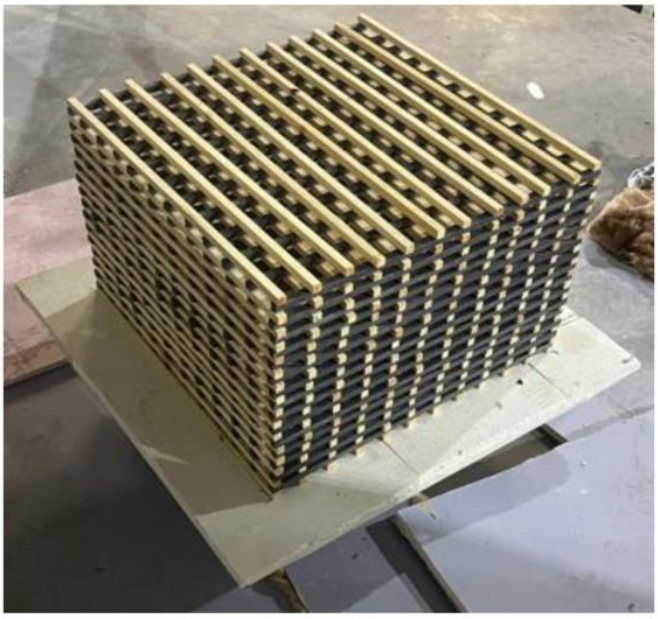

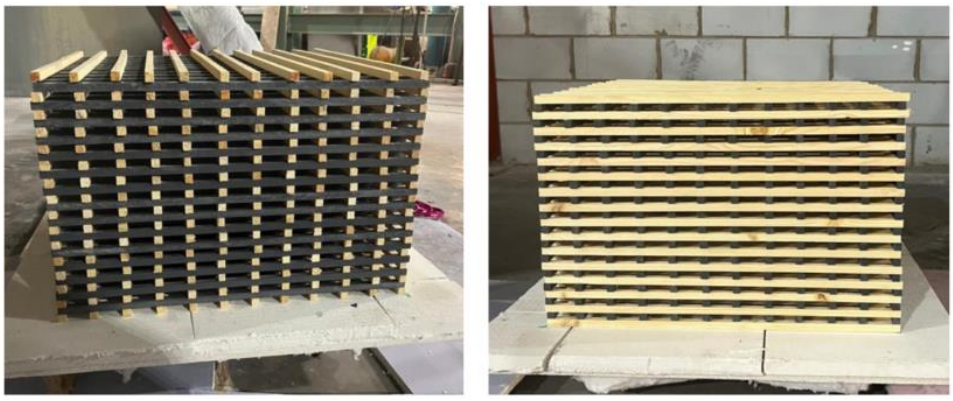

Figure C4-7 Layout of Crib 3 consisting of alternate layers of uPVC and wood sticks

The crib was ignited using 11 strips of low-density fibreboard and of dimension 8 × 8 mm and 600 mm length soaked in 1 L of white spirit. Ignition was performed from one end of the crib. In this test a peak heat release rate of 900 kW was achieved within around 4 min from ignition. The radiant heat flux reached approximately 7.5 kW/m^2 at around 8 min after ignition. As shown in Figure C4-8, the flame height extended to a point where it would likely impinge on the underside of an upper balcony.

Figure C4-8 Crib 3 at close to the point of peak heat release rate in which flames would likely extend to an upper balcony

With a representative balcony area of 3.71 m^2 then 900 / 3.71 = 243 kW/m^2 vs survey 80th percentile value of around 310 kW/m^2. However, since the fire is constrained to the crib which had an area of 0.6 m $\times$ 0.6 m = 0.36 m^2 then 900 / 0.36 is 2,500 kW/m^2.

C4-2.2.4 Summary

Figure C4-9 shows a comparison of the key measurements for the three crib designs discussed above for the first 20 min following ignition. The results illustrate the slow burning of Crib 1 that resulted in the low rate of heat release and radiant heat flux. Figure C4-9(b) compares a medium t^2 curve with the measured heat release rates. The measurements of mass loss and heat release rate for Crib 2 show that the mass had reached approximately zero at 20 min whereas the heat release rate is still showing around 200 kW. It is believed that the oxygen analyser measurements had drifted during the test hence the discrepancy.

The crib mass loss rate and material heats of combustion can be used to estimate the heat release rate as an alternative to the measured value from oxygen combustion calorimetry. Assuming the materials in the crib burn proportional to their mass then a mass weighted heats of combustion have been calculated for each crib. The heat release rate at each time step is the product of the instantaneous mass loss rate and mass weighted heat of combustion. Figure C4-10 shows the calculated heat release rate in which the curves have been smoothed using a Savitzky-Golay filter. The calculated heat release rate from Crib 1 is not very reliable because of the low mass loss rate. Compared to Figure C4-9(b) the calculated heat release rates for Cribs 2 and 3 show higher peak values, which Crib 2 exhibiting a more similar value than when measured with oxygen consumption calorimetry.

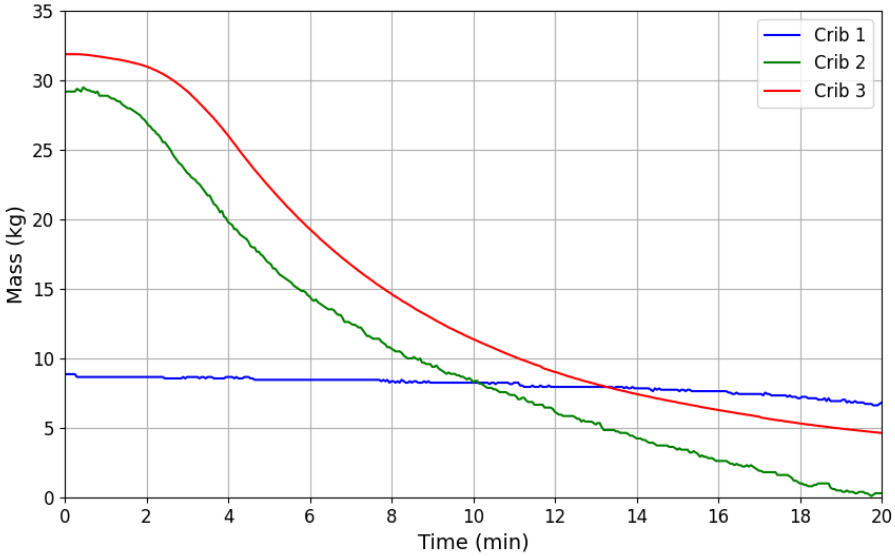

(a)

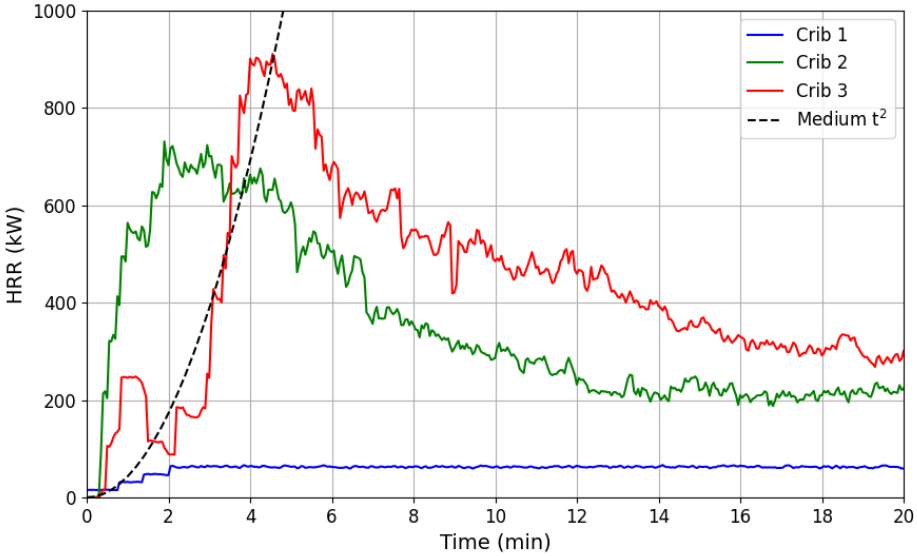

(b)

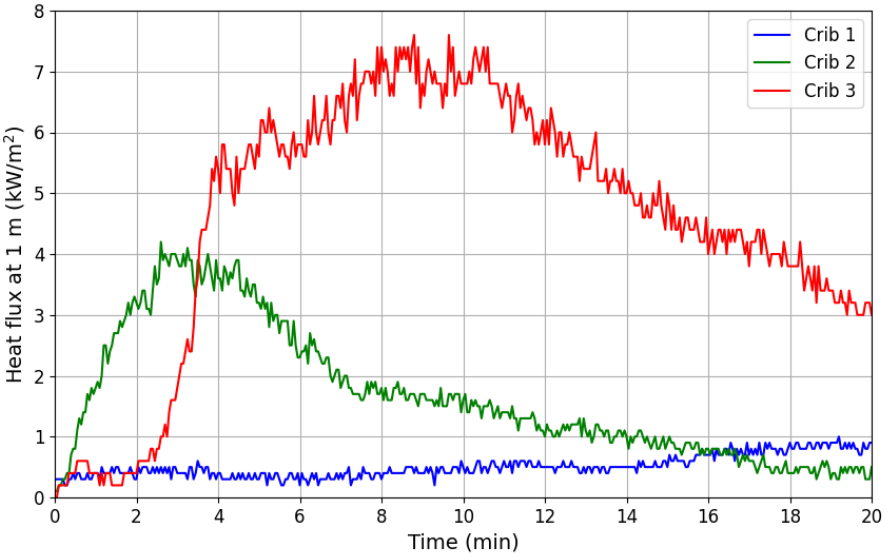

(c)

Figure C4-9 Summary of the three crib tests (a) mass loss (b) heat release rate (c) heat flux at 1 m distance, for the first 20 min after ignition

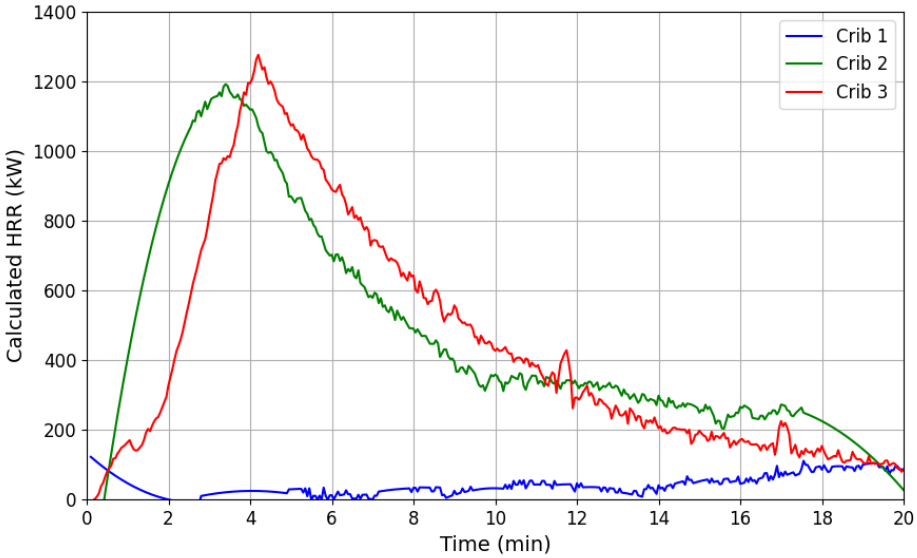

Figure C4-10 Calculated heat release rates of the cribs using mass loss rate and weighted heat of combustion

Table C4-2 shows the estimated total energy content of the three moveable fire load cribs as determined using the crib dimensions and material heats of combustion, the area under the heat release rate curves, and the calculated heat release rates using the mass loss measurements. Crib 3 data recording was terminated at 25 min, therefore the total energy estimates from the heat release rate and mass loss are under-predicted.

Table C4-2 Total energy content of the moveable fire load cribs

Crib	Calculated from crib dimensions (MJ)	Determined from HRR curve (MJ)	Determined from mass loss (MJ)
1	191	146	192
2‡	502	426	563
3	589	585†	547†

‡ Note discrepancy between HRR and mass loss; † Data recording terminated at 25 min

As a result of the above information, Crib 3 was selected to represent of the balcony contents since it provided a relatively high peak heat release rate which generated relatively tall flames. The height of the crib also meant the flames would more closely reach the next balcony level compared to Crib 1 and Crib 2. However, in terms of its footprint, Crib 3 was more compact than the other two cribs.

C4-3. Balcony design details

C4-3.1 Design and structure of balconies

Appendix C3 gives the background details to the selection of the balcony dimensions etc. The primary structure consisted of a wall with a flat front face having overall dimensions 11000 mm wide × 6375 mm high. The wall was constructed of 215 mm thick blockwork and was clad with 12 mm thick CaSi boards, directly fixed to the wall. A standard BS 8414 combustion chamber was located with the wall, made of the same 215 mm thick blockwork. The chamber had an opening of dimensions 2 m wide × 2 m high, located 250 mm off the laboratory floor. Figure C4-11 illustrates the arrangement of the combustion chamber and the location of the associated moveable fire load crib on Balcony 0 when used in a given test.

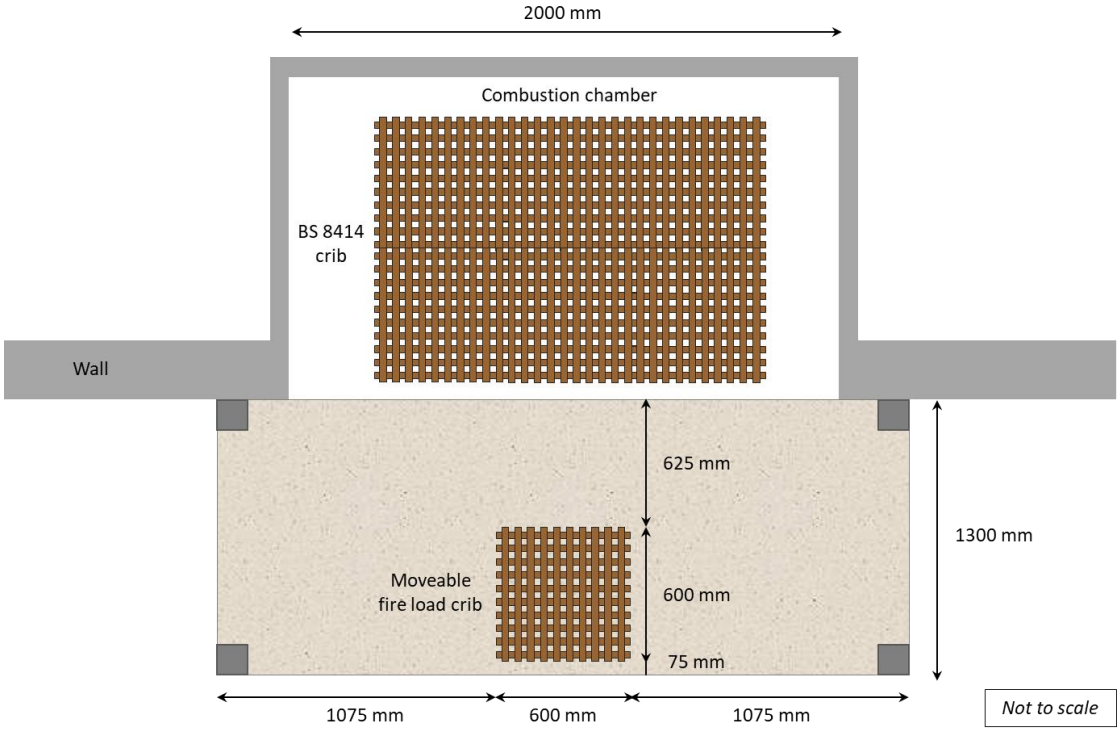

Figure C4-11 Arrangement of the combustion chamber, BS 8414 crib and the position of the moveable fire load crib

In front of the wall, a steel structure was installed to replicate two balconies above the ground floor. The structure was made of four steel universal columns of dimensions 152 mm × 152 mm × 23 mm and PFC beams of dimensions 150 mm × 75 mm × 18 mm (B1 and B2) as shown in Figure C4-12. The balcony deck at each level was nominally 2.85 m wide by 1.32 m deep and was supported by three PFC 100 mm × 50 mm × 10 mm beams (B4), one across the centre and the other two at each edge. On each balcony level (including floor) a handrail made of steel box section of dimensions 50 mm × 50 mm × 3 mm (B5 and B6) was installed at 1100 mm above the floor of the balcony. Finally, a 5 mm thick steel mesh was installed on each balcony floor having

25 mm × 25 mm square openings. The mesh allowed for different decking and protection options as explained in Section C4-3.2.

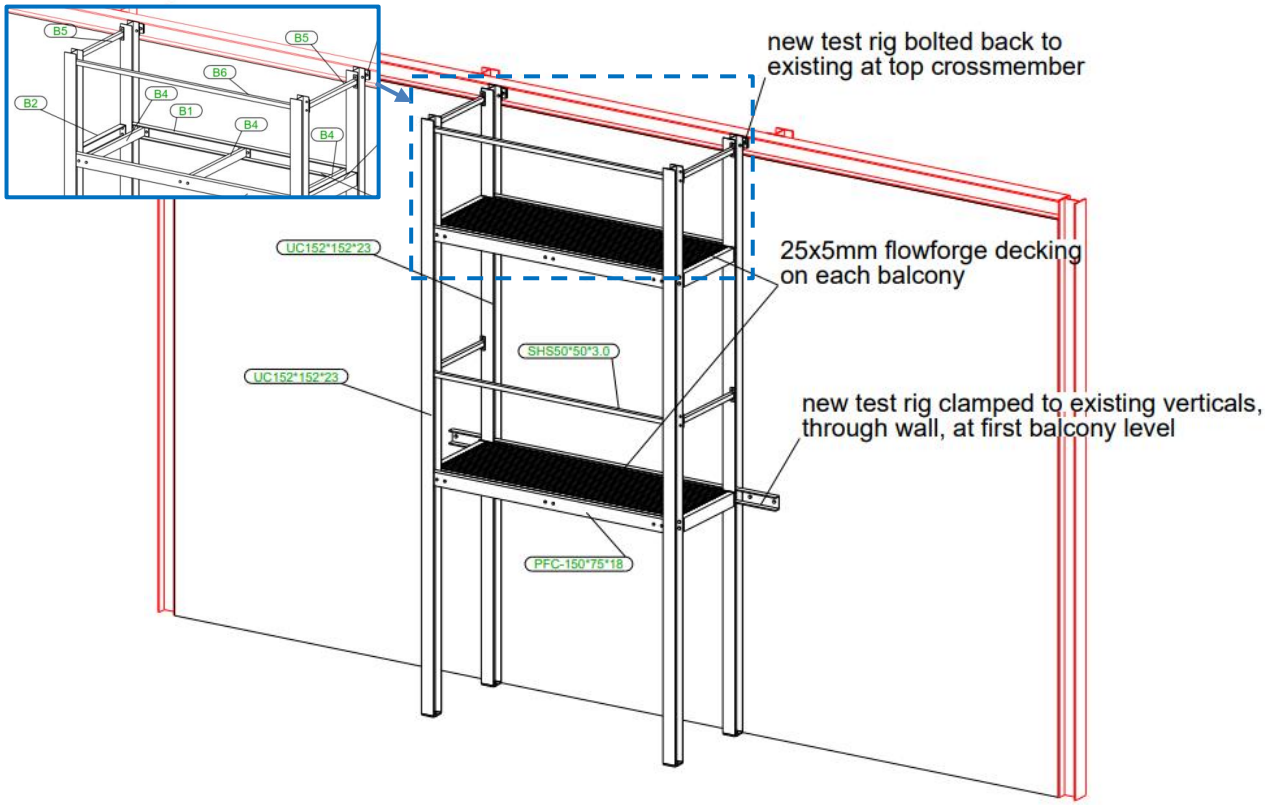

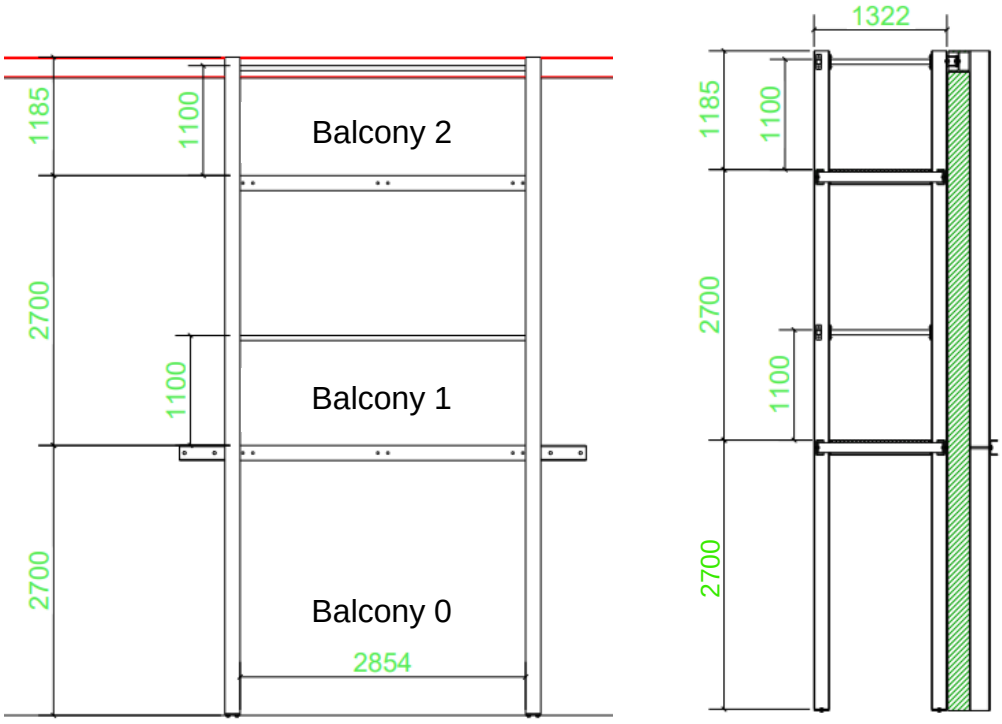

Front elevation Side elevation

Figure C4-12 Primary balcony rig dimensions with steel frame elements identified

Figure C4-13 Photograph of the balcony rig prior to the creation of the combustion chamber

C4-3.2 Moveable fire load crib

The moveable fire load represented by Crib 3 (as discussed in Section C4-2.2.3) was placed at the front edge of the balcony along the centreline (Figure C4-11). The front edge was more conservative in terms of ignition potential and represents the likelihood that people place items such as plant pots, screens on the perimeter (albeit recognising that items such as tables and chairs would likely be in the middle area)

C4-3.3 Decking

C4-3.3.1 Non-combustible decking

Most of the tests were performed with the inclusion of a solid non-combustible decking made of 20 mm thick calcium silicate (CaSi) boards of ca. 920 kg/m^3 density secured on top of the floor mesh.

C4-3.3.2 Combustible wood decking

The background to the selection of the combustible decking material has been previously discussed in **Appendix C3**. The impact of a combustible decking was investigated by using a non-fire treated wooden decking, with the boards running parallel with the face of the external wall. The decking was made of Siberian Larch, manufactured in accordance with EN 14915:2013 [5]. The decking consisted of 92 mm (wide) × 27 mm (thick) profile boards, leaving a nominal gap of 8 mm during installation between the boards. The density of the boards was 590 kg/m^3 and the reaction-to-fire classification of the boards is D-s2, d0 class as provided in Table 1 of the annex to Commission Decision 2000/147/EC with regards to Classification Without Further Testing (CWFT); see harmonised specification EN 14915:2013.

Each balcony required 13 boards, with a nominal length of 2.85 m. By estimating the heat of combustion of the wood to be 18 MJ/kg, the energy content per balcony was around 977 MJ.

C4-3.4 Balustrade

Three different types of balustrades were used during the tests: referred to as open, laminated glass and HPL. The details of each of these are specified below.

C4-3.4.1 Open

Open balustrades were used in Tests A, B, C and F. The open balustrades simulated the simplest design of having a single steel safety handrail installed on each balcony, including on the ground floor.

The open configuration did not directly represent any realistic design but was likely similar to a balustrade that would not act as an obstruction. This would not be the case where balusters are particularly close together or particularly wide. For example, the top image in Figure C4-14 might be close to forming a partial obstruction whereas the lower image is probably sufficiently open that it would have a negligible impact on the flame dynamics, heat fluxes to walls, etc.

Figure C4-14 Examples of balustrades that are likely act as a partial obstruction (top) or could be considered open (bottom), www.indiamart.com/ proddetail/mild-steel-balcony-railing-13492120430.html.

C4-3.4.2 Laminated glass

Tests D and E were performed with laminated glass balustrades. The glass panes were made of 17.52 mm thick toughened and laminated glass (1.52 mm thick PVB layer between two layers of 8 mm thick glass) with 3 mm radius corners and polished all round. The specification of the associated components used are provided in Table C4-3.

Table C4-3 Specification of laminated glass balustrade components

Item	Specification	Photo
Welding flange for 40 × 40 mm baluster post	Square Line section 40 mm × 40 mm Material: stainless steel 316	
Tube – baluster post	Square Line section 40 mm × 40 mm; cut to size Material: stainless steel 304 Colour: satin	
Glass clamp	70 mm (h) × 55 mm (w) for flat connection Material: stainless steel 304 Colour: satin	
Rubber inlay for glass clamp	For 17.52 mm thick laminated glass Material: rubber	
Hexagon socket head cap screw	M8 × 20 mm Material: stainless steel 316 As per DIN 912/ISO 4762	
Hexagon countersunk head screw	M5 × 20 mm Material: stainless steel 316 As per DIN 7991	
Handrail bracket	Straight 40 mm × 40 mm × 2 mm Material: stainless steel 316 Colour: satin	
Hexagon socket head cap screw	M10 × 40 mm Material: stainless steel 304 As per DIN 912/ISO 4762	

Each balcony had two 1,427 mm wide × 920 mm high panes on the front balustrade and one 900 mm wide × 920 mm high pane each side, see Figure C4-15. No edge capping was installed around the perimeter of the glass. The panes were fixed so there was a 50 mm high gap between the top of the balcony deck and the bottom of the glass edge. This was to allow for some potential fire spread through the gap. The lack of edging and the gap potentially allowed for easier ignition of the laminate core in the glass, and could have allowed some dripping of laminate. Discussion with industry suggest that typically on high-rise buildings the glass would be placed in a base channel and may also have capping along some or all the edges depending on the

specific application. The decision to omit any capping and to have the gap was to create a conservative scenario for the test programme.

Figure C4-15 Installation of the laminated glass balustrade

Using a PVB density of 1070 kg/m^3 taken as the upper value of Hassan et al. [6] and a measured heat combustion of 31.35 MJ/kg from **Appendix C2** gives an energy content of 218 MJ per balcony.

C4-3.4.3 High-pressure laminate (HPL)

Tests G and H were performed using HPL panels as balustrades on the balconies. The details of the panels are provided in Table C4-4.

Table C4-4 Properties of the HPL panel material

Thickness	8 mm
Panel dimensions	170 mm (width) × 1000 mm (height)
Density	≥ 1350 kg/m^3
Weight	11.2 kg/m^2
Reaction to fire as per EN 13501-1 [7]	D-s2, d0
Colour	White (RAL 9016)
CE marking	As per EN 438-7

Two layers of HPL panels were installed on each balcony balustrade, including the ground floor, secured as illustrated in Figure C4-16. The two layers were secured on each side of a top and bottom 25 mm × 25 mm steel box section rails, with the panels placed with a 10 mm gap between them and at 50 mm above the floor of the balcony. Each balcony required 52 panels and using an estimated heat of combustion of 10.08 MJ/kg from the work on the Hallam Court investigation then the energy available per balustrade was around 960 MJ.

Figure C4-16 Installation of the HPL balustrade panels

C4-3.5 Soffit

Clause 12.11, b, i of AD B [8] specifies that balconies "*Have an imperforate soffit which extends to the full area of the balcony, achieves a minimum REI 30 rating and is constructed of materials achieving class A2-s1, d0 or better*." To assess this approach, a non-combustible soffit was used to protect the timber decking on each balcony floor in the Tests F and H. The soffit was made of 100 mm thick insulated sandwich panels having a 115 kg/m^3 mineral fibre core and steel facings on each side; all materials have a reaction to fire Euroclass of at least A2-s1, d0 in accordance with the EN 13501-1 [7]. According to the manufacturer, the panels are commonly used and offer 60 min protection with regards to insulation and integrity (EI) when installed horizontally.

The panels were mounted within the metal framework on the underside of the balcony (Figure C4-17), thus the metal work was not fully protected. There was no gap between the panels and the steel parts as it was heavily insulated with mineral wool on the perimeter to cover any gaps occurred between the panel and the steel. The panels were secured using stainless steel rods/fixings to the steel mesh on top.

Figure C4-17 Photographs of the non-combustible soffit panels used in Tests E and F

C4-4. Instrumentation and measuring locations

The tests utilised several types of instruments to characterise each configuration, measuring parameters such as the heat release rate, mass loss rate, gas temperature, steel temperature and heat fluxes.

All the tests were performed under an oxygen calorimetry hood calibrated to measure heat release rates of up to 10 MW, but with a capability to go higher values subject to specific circumstances and safety considerations. Oxygen, CO and CO_2 were collected in the ducting section for calculating the heat release rate during each test.

A load cell platform with an accuracy of ±1 % of total load of the BS 8414 crib was used to measure continuously the mass loss throughout the fuel source combustion period. The scale was protected with a silicate panel. The weighing data (mass loss) was continuously saved every 3 s, however this was only available for Tests A and B as the equipment became damaged and a replacement could not be sourced during the test programme. The absence of the crib mass loss was not critical since heat release measurements were made during all the tests.

Gas temperatures were measured using K-type Inconel thermocouples, having a diameter of 1.5 mm. The thermocouples have a standard calibration uncertainty of ±2.2 °C or ±0.75% (whichever is greater). The same Inconel type thermocouples were used in measuring steel temperature of the centre beam of the lower balcony. They were installed in the bottom flange of the channel (C) section.

Additionally, incident heat flux was estimated from the plate thermometers (PTs) measurements and Gardon gauges. The PTs were prepared in accordance with Häggkvist et al. [9], consisting of a steel plate of 100 mm × 100 mm dimensions, an insulator pad and an Inconel thermocouple. The PTs were placed in several locations, such as in front of the crib, on the wall of the facade, under the balcony facing downwards and on the handrails.

Two water-cooled Schmidt-Boelter heat flux sensors were used during the tests in locations as given in each configuration; either in the front of the crib, on the side on the wall or on the edge of the balcony. The sensors were of 0 – 100 kW/m^2 range and calibrated by the manufacturer.

The exact locations of the measuring equipment for each test are provided in the Appendices. However, a general plan of the locations is given in Figure C4-18. All tests were allowed to burn for at least 60 min by which time the BS 8414 crib had generally been consumed.

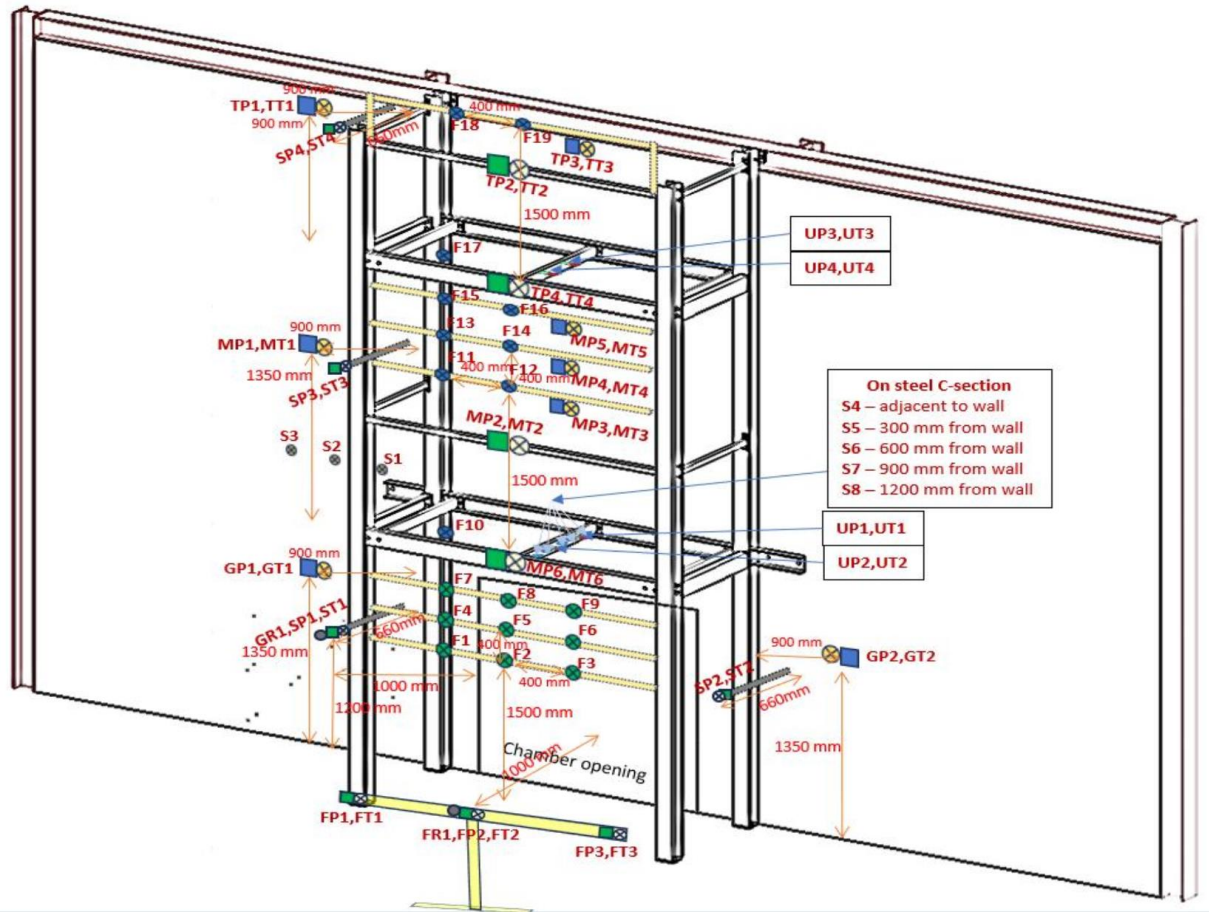

Plate TC on exposed face

Inconel TC on exposed face

Inconel TC on wall

Plate TC on wall

Heat flux meter

2x Plate TC's underside the Balcony floor – At 450 mm and 900 mm from the wall

2x Inconel TC's underside the Balcony floor – At 450 mm and 900 mm from the wall

3m long TC facing outwards, extends out by 50 mm

TC on the steel C-section
S4 – exposed edge of wall
S5 – 300mm away from the wall
S6 – 600mm away from the wall
S7 – 900mm away from the wall
S8 – 1200mm away from the wall

3m long TC facing the crib, extends out by 50 mm

Nomenclature:
The first word of each acronym is to identify their position:
G - Ground floor
S – Side edge to the chamber opening
M – Middle floor
T – Top floor
F – Front facing Inconels
The second word denotes the instrument:
Fluxmeter (R), Plate TC (P), Inconel (T)

Figure C4-18 Instrumentation plan

C4-5. Observations

C4-5.1 Test A – Baseline

Test A consisted of non-combustible solid balcony decks, having an open balustrade, and not having any moveable fire load cribs. The test formed a baseline case to characterise the heat release rate, heat fluxes, etc. when only the BS 8414 crib was burning within the combustion chamber. Figure C4-19 shows the extent of flaming at the point of peak burning of the BS 8414 crib at around 20:00 after ignition.

Figure C4-19 Test A at the point of peak burning at around 20:00 after ignition

C4-5.2 Test B – Moveable fire load

The objective of Test B was to examine how the presence of the moveable fire load cribs might lead to fire spread between balcony levels. As with Test A, the balcony decks were covered with non-combustible board and the balustrade left open. Moveable fire load cribs were placed on every deck level, 75 cm from the front edge, and a crib also placed on the floor in line with the deck located cribs.

02:20 – Balcony 1 crib ignites

15:35 – Balcony 0 crib ignites

20:00 – Impact of Balcony 0 crib fire on flame dynamics

Figure C4-20 Key events during Test B

Figure C4-20 shows the approximate times at which key events during Test B were observed. Of particular interest is how the burning of the crib at Balcony 0 impacted on the fire dynamics in which the flames were seen moving to the sides of the balcony whereas earlier they mainly projected to the front edge. The crib on Balcony 1 ignited after around 02:20 whereas Balcony 2 did not ignite during Test B.

C4-5.3 Test C – Exposed timber decking

Test C replaced the non-combustible balcony decks with class D timber. The moveable fire load cribs were placed as with Test B. During the test the flames penetrated timber decking rather than being projected to the front of the balcony. It appeared that the moveable fire load cribs had very little impact on the spread of fire. Figure C4-21 shows the approximate times that key events were observed during Test C.

01:20 – Balcony 1 deck ignited | 07:00 – Balcony 2 deck ignited | 16:00 – Peak burning stage

Figure C4-21 Key events during Test C

C4-5.4 Test D – Laminated glass balustrade

Test D was carried out to assess the potential contribution of having a laminated glass balustrade when isolated from any other combustible elements. The balcony decks used the non-combustible CaSi board and the moveable fire load cribs were not located on the decks. The approximate times that key events were observed during Test D are shown in Figure C4-22.

08:30 – Top edge of Balcony 1 glass burning

20:00 – Peak burning

23:43 – Balcony 1 balustrade glass on right falls away

33:00 – Burning of laminate of exposed edges and on the laboratory floor

Figure C4-22 Key events during Test D

Some burning around the edges of the laminated glass was observed. The top edge of the Balcony 1 balustrade appeared to ignite at around 08:10. Sections of the balustrade on Balcony 1 eventually fell away starting at 23:43. The fire did not spread to Balcony 2. Burning was seen on the laboratory floor from around 28:55 in two locations possibly as the result of the formation of small pool fires following the melted laminate.

C4-5.5 Test E – Laminated glass balustrade and moveable fire load

Test E was like Test D except this time the moveable fire load cribs were re-introduced to the balcony decks. Figure C4-23 shows the approximate times that key events were observed during Test E. It was difficult to see when the crib on Balcony 1 ignited because of the glass balustrade, but it was judged that this occurred at 8:03 from ignition. The crib on Balcony 0 ignited at 11:28. As with Test D, some burning around the edges of the laminated glass was observed and sections of the balustrade on Balcony 1 eventually fell away. The left section fell away at around 28:43 and then the right section at around 33:45. Similar to Test D, the fire did not spread to Balcony 2.

11:28 – Balcony 0 crib ignites

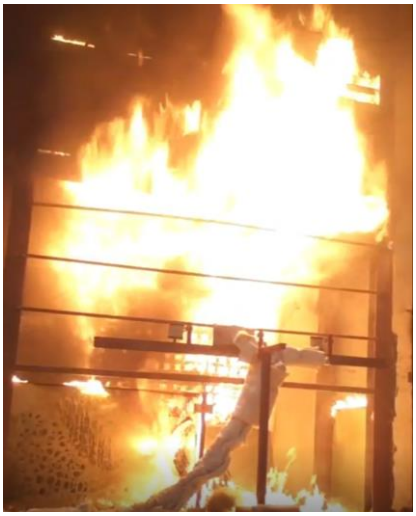

25:00 – Peak burning with flames on Balcony 0 floor and the glass edges

30:00 – Balcony 1 balustrade glass on left has fallen away

Figure C4-23 Key events during Test E

C4-5.6 Test F – Timber decking with non-combustible soffit

The purpose of Test F was to assess the effect of having a non-combustible soffit to the underside of timber decking. In this test the balustrade was left open and the moveable fire load cribs were included. The timber decking was the same as with Test C.

03:14 – Balcony 1 crib seen burning

07:50 – Balcony 1 deck seen burning

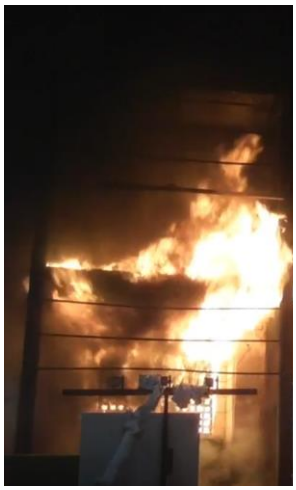

22:00 – Peak burning

26:30 – Balcony 1 soffit falls away

32:30 – Balcony 2 deck seen burning

34:17 – Balcony 2 crib seen burning

39:50 – No burning on Balcony 1 but Balcony 2 still burning

Figure C4-24 Key events during Test F

The key events observed during Test F are shown in Figure C4-24. Compared to Test C, the soffit under Balcony 1 appears to slow the time to ignition of the timber decking by around 6 min. The soffit under Balcony 1 fell away at around 26:30. The fire spread to Balcony 2 possibly via ignition of the moveable fire load crib at that level. Thereafter, the fire spread to the timber decking on Balcony 2 by which point the fire on Balcony 1 had effectively burned out.

C4-5.7 Test G – Exposed timber decking and HPL balustrade

Test G was the most challenging scenario of the programme given the balconies had exposed timber decking along with a combustible balustrade using HPL panels. The test was arranged to mimic the fire that occurred at Hallam Court, although specific details differed because of the exact test setup etc. Based on the findings from Test C, the moveable fire load cribs were not used in this test as it was expected that the fire would develop rapidly over the full height of the test rig. It turned out that this was the case, and the test was terminated after around 16 min (Figure C4-25) to prevent damage to the laboratory infrastructure.

03:04 – Fire exposure to underside and balustrade of Balcony 1

06:00 – HPL panels burning on Balcony 1

09:30 – Timber decking and HPL panels burning on Balcony 2

10:52 – Flaming HPL falling away from Balcony 1 (laboratory floor, bottom right)

13:14 – Fire continues to develop. Fallen burning HPL no longer burning

16:25 – Test terminated

Figure C4-25 Key events during Test G

Pieces of flaming HPL were observed falling from Balcony 1 starting at around 10:18 and other pieces intermittently fell away thereafter. These pieces continued to burn after falling until they burned out / self-extinguished. No pieces of HPL were seen falling away from Balcony 0 and Balcony 2 partly because the early termination of the test.

C4-5.8 Test H – Timber decking with non-combustible soffit and HPL balustrade

The final test examined the use of a non-combustible soffit in combination with timber decking and a combustible HPL balustrade. As with Test G, no moveable fire load cribs were included. Figure C4-26 shows the approximate times that key events were observed during Test H. Here the fire eventually spreads to Balcony 2 at around 30:00 through ignition of the combustible elements.

03:24 – Approximate time of ignition of Balcony 1 balustrade

11:00 – Initial peak burning

16:00 – Fire at 16 min (compare Test C and Test G at the same time)

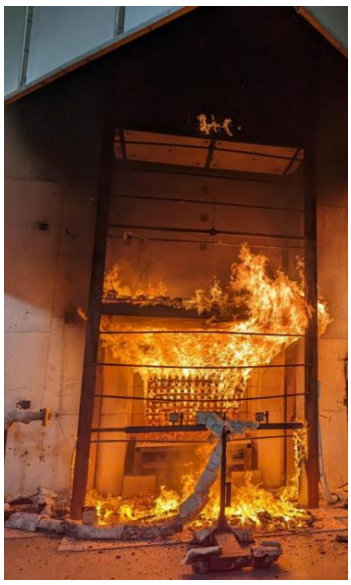

30:00 – Balcony 2 is seen burning. Right-hand soffit panel shows signs of detachment

37:00 – Balcony 2 reaches maximum burning

50:00 – Minimal burning on the balconies and combustion chamber. Right-hand soffit panel has fallen away

Figure C4-26 Key events during Test H

At 10:13 pieces of HPL started falling from the balustrade on Balcony 1, and by 21:46 complete panels were seen dropping away from the left side of the balustrade. Several of the front panels on Balcony 0 broke away in quick succession beginning at 25:31. Finally, the panels on the front of Balcony 2 also fell away from its balustrade starting at around 37:05. The right-hand soffit panel under Balcony 1 fell away at 47:36 but was already showing signs of detachment from the balcony at the front edge at around 28:00.

C4-6. Analysis

C4-6.1 Heat release rate

Figure C4-27 shows the measured heat release rate for all eight balcony tests from ignition up until 60 min except for Test G which was terminated at around 16 min. To give clarity to the analysis of the results, Figure C4-28 presents the same heat release rate measurements as a set of pairwise comparisons.

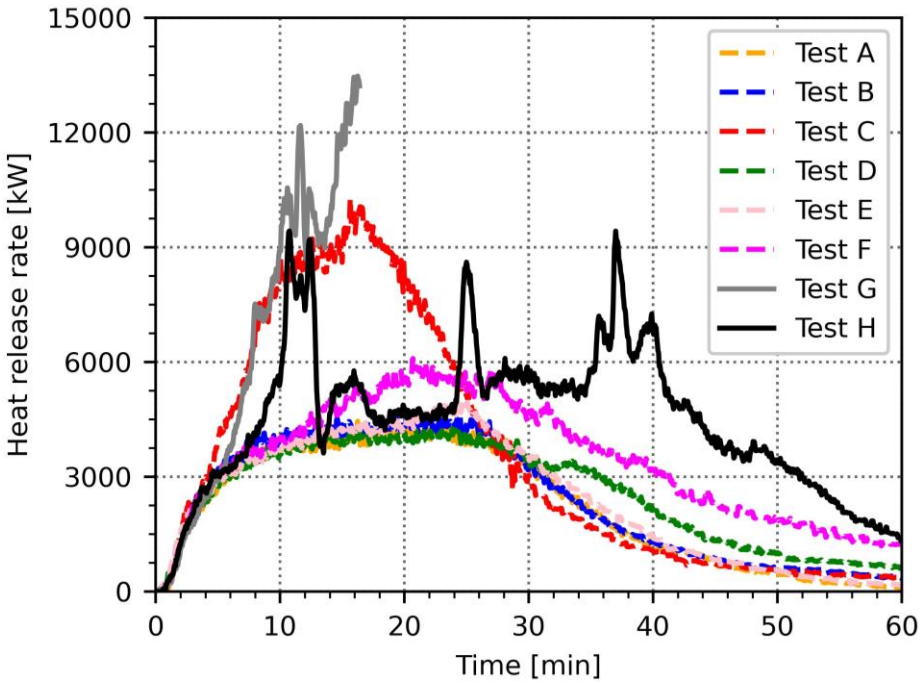

Figure C4-27 Overall comparison of heat release rate measurements

Comparing Test A against Test B shows that the moveable balcony fire load, by the addition of the cribs, had minimal impact on the heat release rate, with both tests giving a peak heat release rate of around 4.5 MW (i.e. like Figure C4-2). However, having a combustible deck that is exposed from the underside results in additional fire development as shown when Test B is compared to Test C; the peak heat release rate in Test C is ca. 10 MW.

The installation of the laminated glass balustrade, both when the moveable fire load was not present (Test A vs Test D) and when the moveable fire load was present (Test B vs Test E) had little if any impact on the heat release rate. The combustion of the glass edge laminate and any laminate that drips from balustrade would have contributed a small amount of energy to the fire but the peak heat release rates were all around 4.5 MW across all four tests.

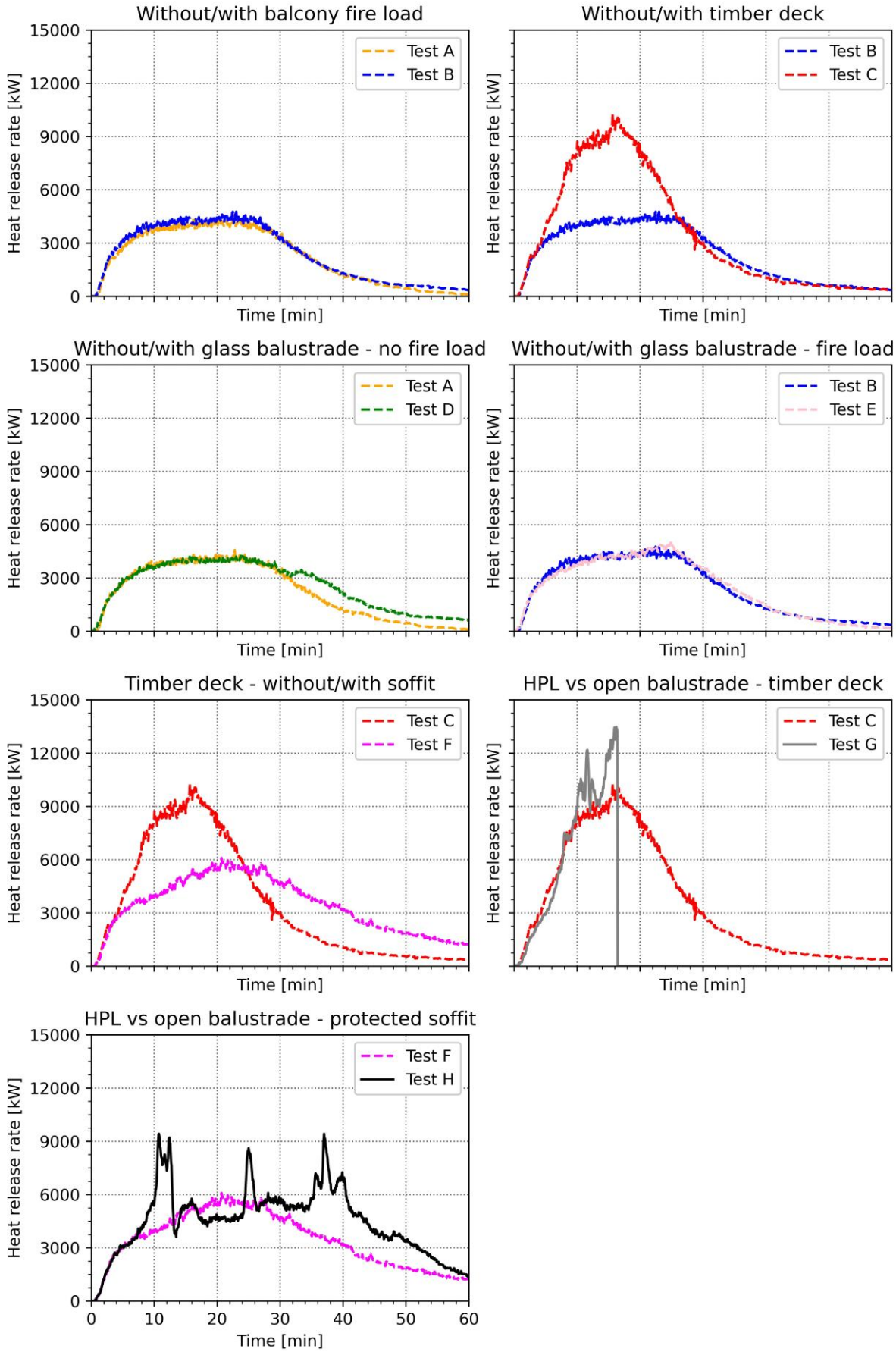

Figure C4-28 Pairwise comparison of heat release rate measurements

The effect of the HPL balustrade and combustible timber decking can been seen when Test C is compared with Test G. The rate of fire development in both cases are equivalent suggesting it is the decking that dominates this mechanism. The peak heat release reaches around 13.5 MW when the HPL is present, with the curve indicating that a higher peak of some indeterminate value was likely had the test not been terminated at around 16 min.

Finally, the addition of the non-combustible soffit with a timber decking and moveable fire load can be assessed by comparing Test C vs Test F. Similarly, the impact of the soffit with the combustible (HPL) balustrade can be seen by comparing Test F vs Test H. In the case of the timber decking, the soffit led to a reduction in the peak heat release rate from around 10 MW down to around 6 MW. With the HPL balustrade the heat release rate exhibits three peak values of around 9 MW each time because of the fire spreading to the combustible elements.

Those balcony configurations in which the HRR exhibited a significant increase beyond the contribution of the BS 8414 crib show an approximately linear growth. Balcony fires differ from enclosure fires since there are not the same heat feedback and ventilation effects taking place. Fires in room-scale enclosures often exhibit an accelerating fire growth and a transition to a fully developed regime following flashover.

C4-6.2 Total energy release

Using the estimates of energy content for the moveable fire load crib from Section C4-2.2.4, the timber decking from Section C4-3.3.2, the laminated glass Section C4-3.4.2, and the HPL panels from Section C4-3.4.3, Table C4-5 shows the calculated available energy content for each test, excluding the BS 8414 crib.

Table C4-5 Calculated available energy content, excluding the BS 8414 crib

Test	Moveable fire load cribs (MJ)	Timber decking (MJ)	Laminated glass (MJ)	HPL balustrade (MJ)	Calculated total available (MJ)
A	-	-	-	-	0
B	1,767	-	-	-	1,767
C	1,767	2,930	-	-	4,697
D	-	-	655	-	655
E	1,767	-	655	-	2,422
F	1,767	2,930	-	-	4,697
G	-	2,930	-	2,880	5,810
H	-	2,930	-	2,880	5,810

- Not used

Not all the available fuel burned depending on the extent of fire spread. Therefore, the amount of energy released is estimated from the test observations and compared to the measured results. For Tests C, F and H it is assumed all of the fuel burned, for Tests B, D and E the fire spread to Balcony 1 and also to Balcony 0, and therefore the estimated total energy release is 2/3 of the calculated total in Table C4-5 plus 8,000 MJ for the BS 8414 crib from Section C4-2.1. For Test G it has been assumed that all the fuel on Balcony 1 was consumed, plus ½ of the fuel on Balcony 2 and ½ the timber deck on Balcony 0 prior to test termination. The energy release from the BS 8414 crib is found from Figure C4-2 to be 2,335 MJ for 16 min of its burning duration. The estimates have been compared to the measured energy release in Table C4-6.

Table C4-6 Estimated and measured energy release compared to the calculated available energy content, including the BS 8414 crib

Test	Calculated total available (MJ)	Estimated from test results (MJ)	Measured (MJ)	Percentage difference between estimated and measured
A	8,000	8,000	8,061	99%
B	9,767	9,178	8,711	105%
C	12,697	12,697	12,644	100%
D	8,655	8,436	9,222	91%
E	10,422	9,615	8,750	110%
F	12,697	12,697	12,335	103%
G	13,810	5728	6,272	91%
H	13,810	13,810	16,032	86%

The estimated total energy released in each test was within ca. 15% or better than the measured values. The match is somewhat dominated by the fact that the energy release mainly comes from the BS 8414 crib in which the estimate and measured in Test A are with 1% of each other.

C4-6.3 Heat flux

Figure C4-29 shows the results from the measurement of the heat flux to the balcony edge at the indicated nominal locations above the floor of the laboratory. In addition, Figure C4-30 shows the heat flux results as a violin graph for the first 20 min of each test.

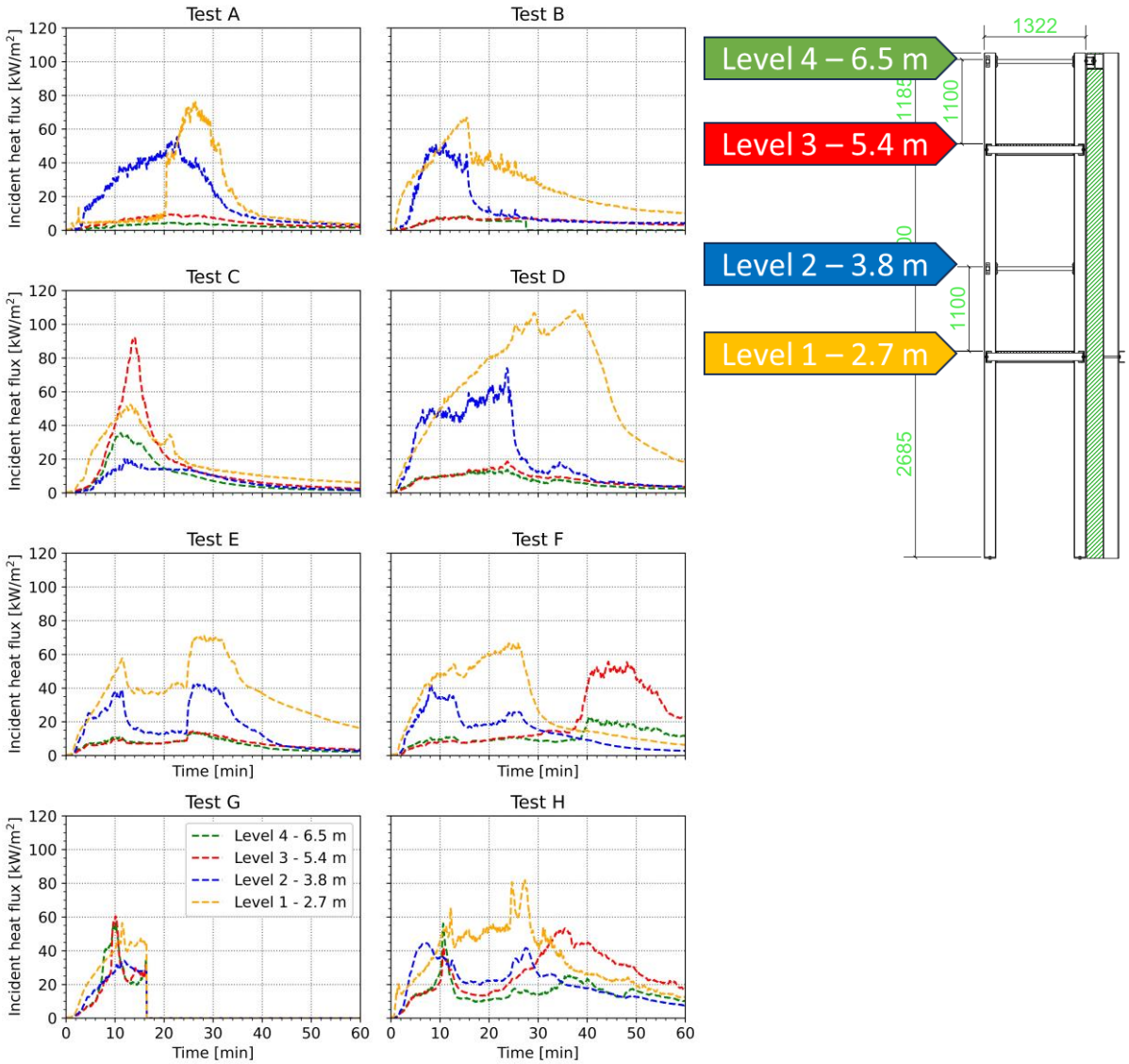

Figure C4-29 Measured heat flux at the balcony edge at the indicated nominal locations

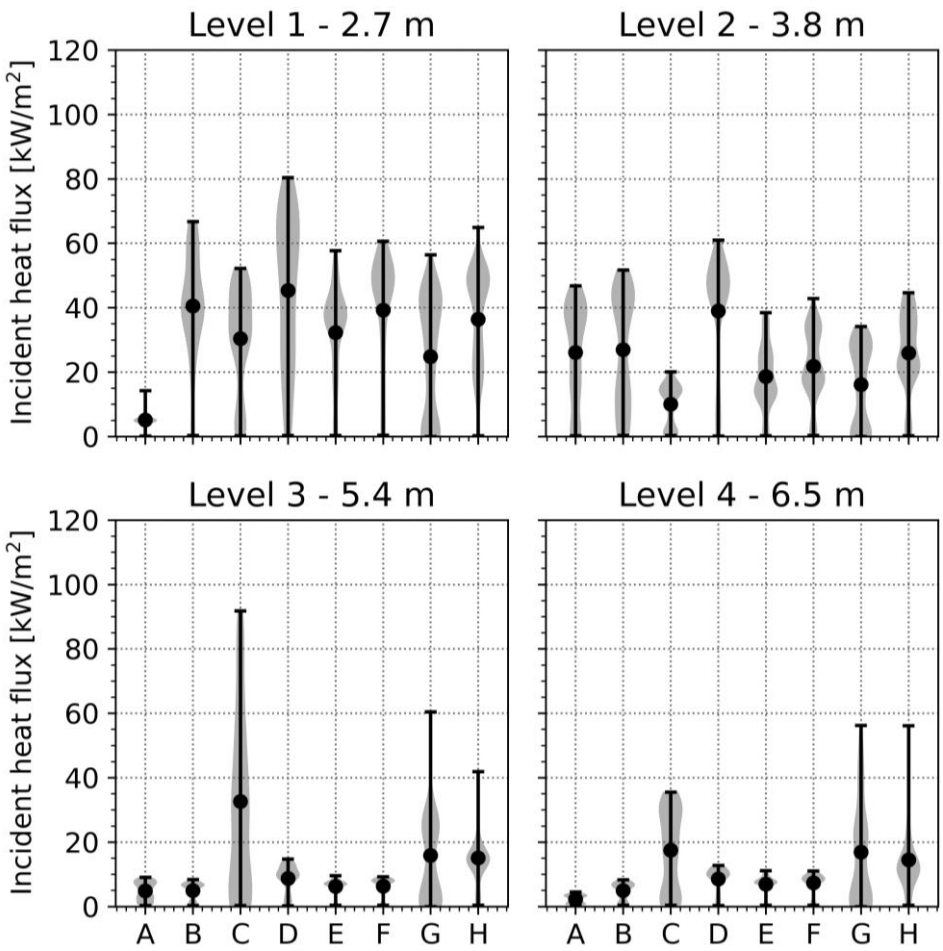

Figure C4-30 Violin graph comparing measured heat flux at the balcony edge at the indicated locations for the first 20 min of each test

Figure C4-31 shows the results from the measurement of the heat flux to the blockwork wall at the indicated nominal locations above the floor of the laboratory and
Figure C4-32 shows the heat flux results as a violin graph for the first 20 min of each test.

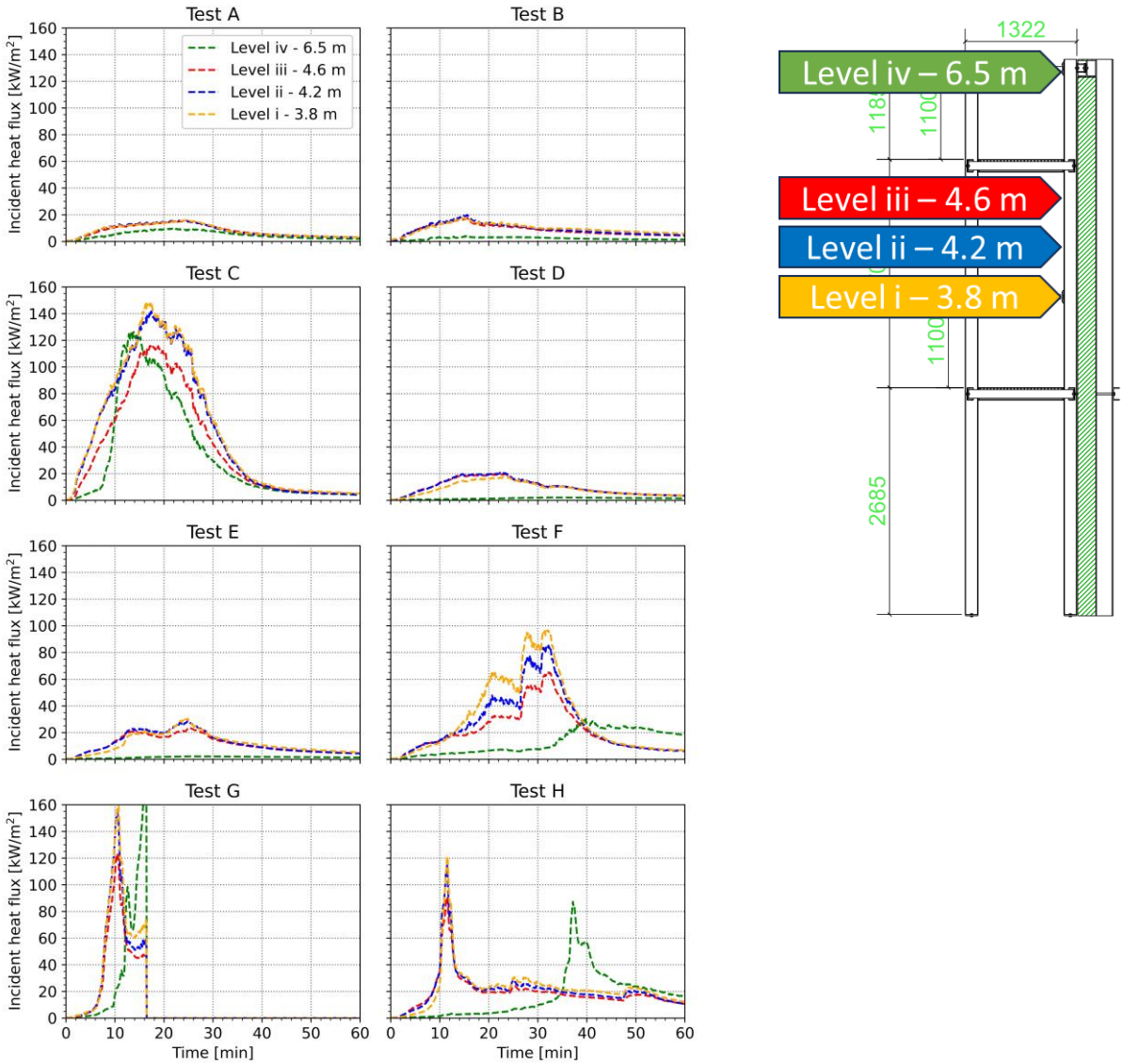

Figure C4-31 Measured heat flux at the façade wall at the indicated locations

In Test A the heat flux measurement to the balcony edge prior to around 20 min appears to be unreliable. It is likely the measurement would have been similar to the early part of the other tests as this phase was dominated by the flames from the BS 8414 crib.

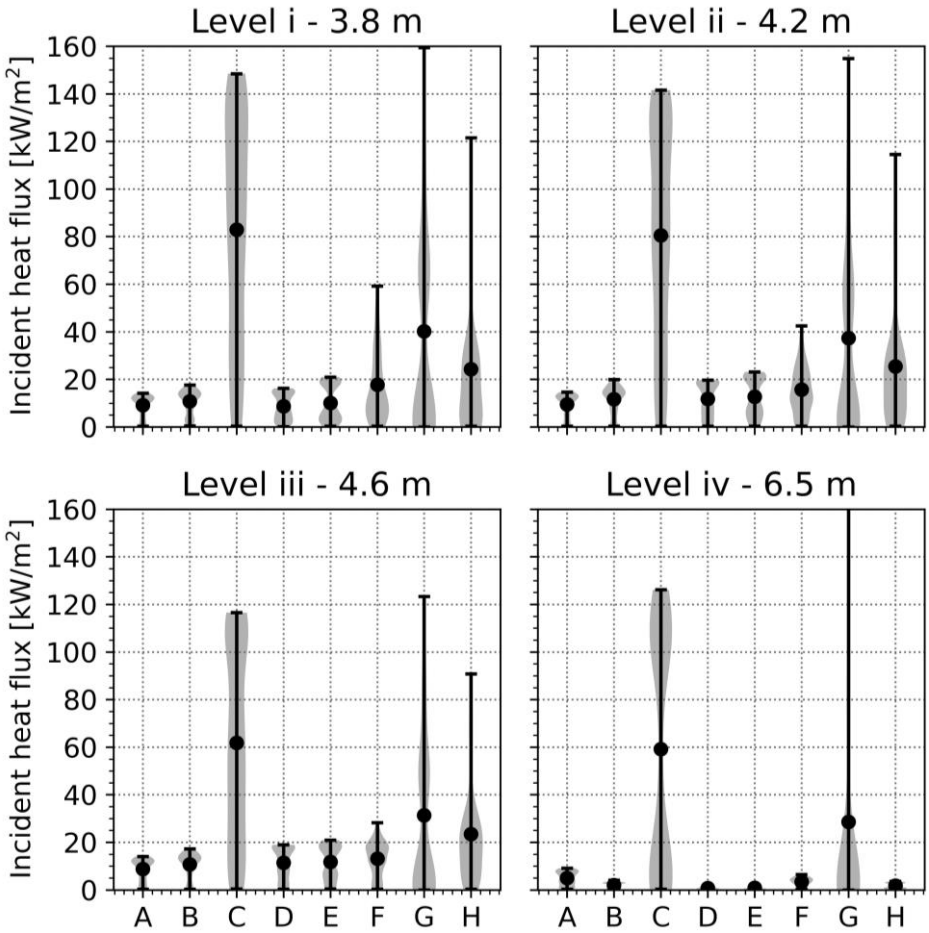

Figure C4-32 Violin graph comparing measured heat flux at the façade wall at the indicated locations for the first 20 min of each test

Comparing the heat flux to the wall façade at Level 2 in Tests A and B shows a difference in peak of around 5 kW/m^2 at 15 min. As shown in Figure C4-9(c), the measured heat flux 1 m from the crib in isolation reached around 7.5 kW/m^2 so the difference is relatively consistent given the only difference was Test B had the moveable fire load cribs whereas Test A did not. However, after around 15 min the Level 0 crib ignited which changed the dynamics of the flames. The balcony front heat fluxes appear to show this change in their measurements in Test B when compared with Test A.

Due to the flames in Test C passing through the exposed timber decking, the measured heat fluxes to the balcony edge are lower than to the façade wall. Peak heat fluxes in excess of 100 kW/m^2 (up to around 140 kW/m^2) were recorded at all four levels at the wall façade after around 12 – 18 min.

Tests D and E had the laminated glass balustrade installed in which the peak heat fluxes at Level 1 are around 60 – 80 kW/m^2 over the first 20 min. These peak heat fluxes are comparable to the highest exposure condition of 75 kW/m^2 used in small-scale laminated glass experiments discussed in **Appendix C2**.

Test F shows an increasing heat flux to the façade wall at Level (iv) starting at around 31 min which is likely attributed to the ignition of the crib on Balcony 2 and then the involvement of the timber decking thereafter (Figure C4-24). As already noted, the

measured heat flux 1 m from the crib in isolation reached around 7.5 kW/m^2. The heat flux to the façade wall in Test F peaked at around 30 kW/m^2.

Like the analysis of the heat release rate measurements, Figure C4-33 shows a pairwise comparison of the measured heat flux to the wall at Level (i) over the first 20 min of each test. Examining the Tests A, D and E show that the presence of the laminated glass balustrade has no significant effect on the measured heat flux.

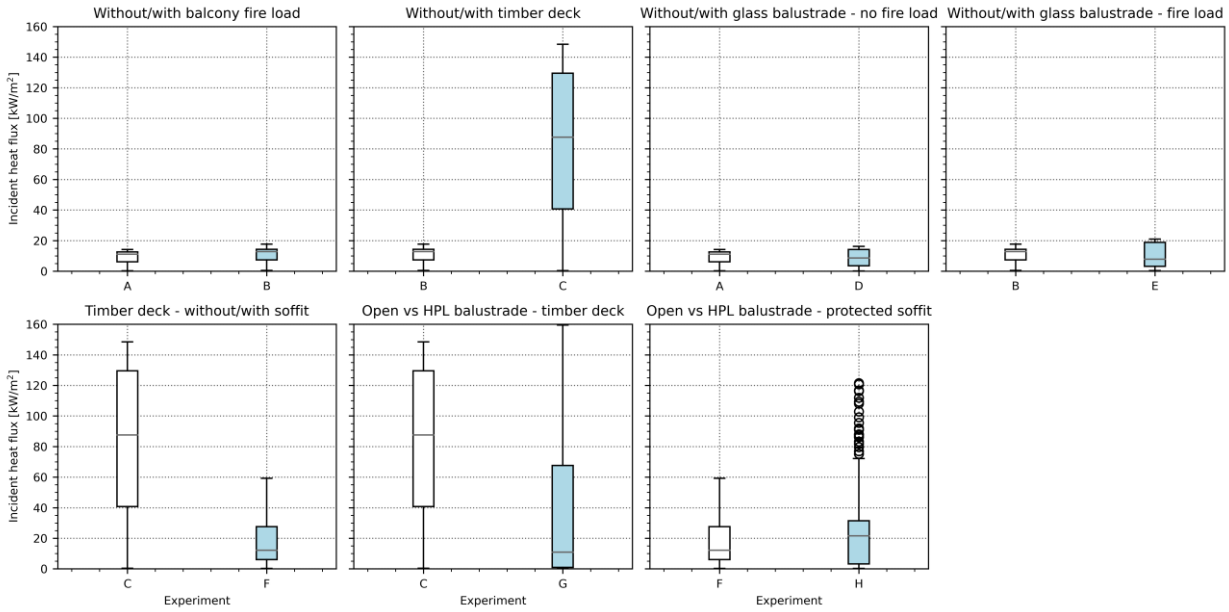

Figure C4-33 Pairwise comparison of the wall heat flux at Level (i) over the first 20 min

C4-6.4 Fire spread

Heat release rate measurements provide a way to assess fire spread since, all other things being equal, a fire that spreads will release more energy than one that does not. However, where there are individual fuel packages, mixtures of combustible materials, fuel surfaces at different orientations, etc. then heat release rate might not distinguish between unique fire spread outcomes and alternative assessment methods may be more informative.

C4-6.4.1 Upward

When considering upward fire spread between balconies there are several combustible elements present that can indicate the progress of the fire: ignition of the moveable fire load cribs, ignition of the timber decking, and ignition of the HPL balustrade panels.

Thus, one approach to assess the fire spread between balconies is to examine the four tests in which the moveable fire load was present. Test C is not particularly useful for this assessment as the fire spread was via the exposed timber decks, but the results are given for completeness. However, Tests B, E and F provide some insights and the times of ignition of the cribs on the three balcony levels are given in Table C4-7. The times are approximate as in some cases it was difficult to observe the exact time of ignition.

Table C4-7 Approximate ignition times of balcony cribs

Test	Balcony		
	0	1	2
B	15:35	02:20	NI
C	08:32	03:50	07:15
E	11:28	08:03	NI
F	13:14	03:14	34:17

NI no ignition

The times to ignition of the crib on Balcony 0 for Tests B, E and F are similar by around ±2 min. All times exceed the ignition of the cribs on Balcony 1 as the Balcony 0 cribs appear to have been ignited via non-piloted radiant energy exposure. The times to ignition of the crib on Balcony 1 in Tests B and F, in which there was an open balustrade, are similar and these times are approximately 5 min sooner than in Test E with the laminated glass balustrade. This would suggest that the presence of the laminated glass balustrade increased the time to ignition by separating the crib from the flames from below the balcony floor. Finally, the crib on Balcony 2 ignited in Test F after almost 35 min whereas it took only around 7 min in Test C.

The second fire spread mechanism is assessed in the four tests in which the timber deck was used. The underside of the timber was exposed in Tests C and G, and the non-combustible soffit was present in Tests F and H. Table C4-8 gives the approximate ignition times of the timber decks on each balcony level.

Table C4-8 Approximate ignition times of timber decks

Test	Balcony		
	0	1	2
C	13:30	01:14	07:00
F†	13:10	07:50	32:30
G	NI	05:05	09:30
H†	11:55	07:35	20:54

NI no ignition; † includes non-combustible soffit

The times to ignition of the timber deck on Balcony 0 are consistent across Tests C, G and H. Test G was terminated before the timber on Balcony 0 was able to ignite. Times to ignition for Balcony 1 are sooner when the timber was exposed compared to when the soffit was present, although the difference is only around 2½ min when Test G is considered. The difference in the ignition times at Balcony 2 is noticeable when the exposed and soffit tests are compared. When examining Tests C and G it is somewhat surprising that the ignition time of the timber decking on Balcony 1 and Balcony 2 are sooner with just the exposed timber (Test C) compared with having both exposed timber and the HPL balustrade (Test G). It might be expected having the HPL present would reduce the ignition times, however the difference may just be experimental uncertainty or the HPL shielded the timber deck from the flames at the early stages of the fire.

The third fire spread assessment is made for Tests G and H in which the HPL balustrade panels were present. Table C4-9 gives the approximate times at which the panels ignited at each balcony level based on the observations and video recordings. In each case it was the panels along the front balustrade that first ignited. The Balcony 0 HPL panels did not ignite in Test G likely due to the early termination of the test.

Table C4-9 Approximate ignition times of HPL balustrade panels

Test	Balcony		
	0	1	2
G	NI	06:03	09:12
H†	11:13	03:39	10:39

NI no ignition; † includes non-combustible soffit

An alternative approach to assessing fire spread is to consider whether a fire could ignite the façade were it combustible or spread to combustible items within the internal spaces (e.g. a window curtain). In the case of moveable items and/or combustible decking on a balcony that ignites, these could promote fire spread to the internal spaces via radiant energy and direct flame contact. Such mechanisms have been addressed above. Using the heat flux to the wall is another metric that can be used by selecting a critical heat flux, or by doing a radiant ignition calculation such as that given in PD 7974-1 [10]. As with BR 187, here a value of 12.6 kW/m^2 is used as the critical heat flux and the results are shown in Table C4-10.

Table C4-10 Times at which the wall façade first achieved a heat flux of 12.6 kW/m^2

Test	Level i	Level iv
A	14:40	NA
B	09:50	NA
C	02:05	07:45
D	13:05	NA
E	12:00	NA
F	10:05	34:00
G	06:40	09:50
H	08:50	32:55

NA Not achieved

The times given in Table C4-10 (and elsewhere in this report where times to reach a critical heat flux are given) are from the ignition of the BS 8414 crib (i.e. the start of a test) and therefore include a 1 to 1½ min in which the BS 8414 crib fire is contained within the combustion chamber.

C4-6.4.2 Downward

The above three assessments have all considered upward spread between the balconies. However, downward spread is also investigated in this study. As noted in Section C4-5, two tests that involved potential downward fire spread were Test D and

Test E in which laminated glass balustrades were installed on the balconies. In this case two downward spread mechanisms are anticipated: dripping laminate from glass that remains intact and in situ; and broken, falling glass which may have associated burning laminate. The dripping of burning laminate was observed in the small-scale laminated glass experiments reported in **Appendix C2**.

In Test D part of the glass balustrade fell away from Balcony 1 at 23:43, and this was followed by further collapse at 27:40 and then at 39:48. The observations noted flaming droplets from the collapsed glass. In Test E the balustrade glass started falling away after 29:57 with further failure at 33:45 and thereafter. Breakage and collapse of the glass on Balcony 0 was seen in Test D starting at 31:30. In Test E the glass on Balcony 0 started to show signs of failure from around 22:43 onwards, noting the crib on this level had ignited at around 08:32 and so would have likely increased the thermal exposure to the glass compared to Test D in which the cribs were not used. A summary of the initial glass failure times is given in Table C4-11.

As far as could be observed, there was no dripping of burning laminate from the unbroken glass. It is likely that the impact of the BS 8414 crib fire burned away any exposed laminate from the exposed bottom edge of the glass on Balcony 1 before it could drip downwards. No dripping laminate was noted from the bottom edge of the glass on Balcony 2. A pooling of burning material was observed on the floor of the laboratory at Balcony 0 in both tests. In Test E this was because of glass breaking and collapsing and not dripping. However, it is possible that in Test D this was due to melted laminate close to the glass that then ignited at around 29:20, although it may have also been pieces of glass than had fallen from Balcony 1 when it broke at 23:43.

The other two tests in which falling balustrade material was observed were Test G and Test H. These had the HPL panels installed. HPL was only seen falling from Balcony 1 because the test had to be terminated early. However, in Test H the balustrades on all three balconies had HPL panels falling away, and in some cases the panels were almost complete rather than just small pieces as was the case in Test G. The breaking away of the panels on the front of Balcony 1 occurred at almost the same time in both tests, with only a 5 s difference. Times that panels were first observed falling away from the balustrades are shown in Table C4-11.

Table C4-11 Summary of approximate times when falling balustrade material was first observed

Test	Balcony 0	Balcony 1	Balcony 2
D	31:30	23:43	NF
E	22:43	29:57	NF
G*	NF	10:13	NF
H	25:31	10:18	37:05

NF No falling material; * Test terminated at ca. 16 min

C4-6.4.3 Lateral

In addition to vertical upward and downward fire spread, it is also necessary to consider lateral spread from one balcony to another at the same level. In the tests the heat flux facing the left-hand side of the balconies was measured at each balcony level using plate thermometers. A Gardon gauge was also placed at Balcony 0 next to the plate thermometer to give a comparative assessment of the performance of the plate thermometers. The Balcony 0 and Balcony 1 sensors were located 1,200 mm from the associated floor, 1,000 mm from the edge of the combustions chamber and 660 mm from the wall. The Balcony 2 plate thermometer was placed 900 mm above the balcony floor. Unfortunately, no measurements were made in Test A as the instruments were accidently omitted from the setup.

Similar readings were given by the Gardon gauge (GR1) and the plate thermometer (SP1) at the Balcony 0 level. The results from Test H illustrate how the Gardon gauge is more responsive to rapid heat flux fluctuations.

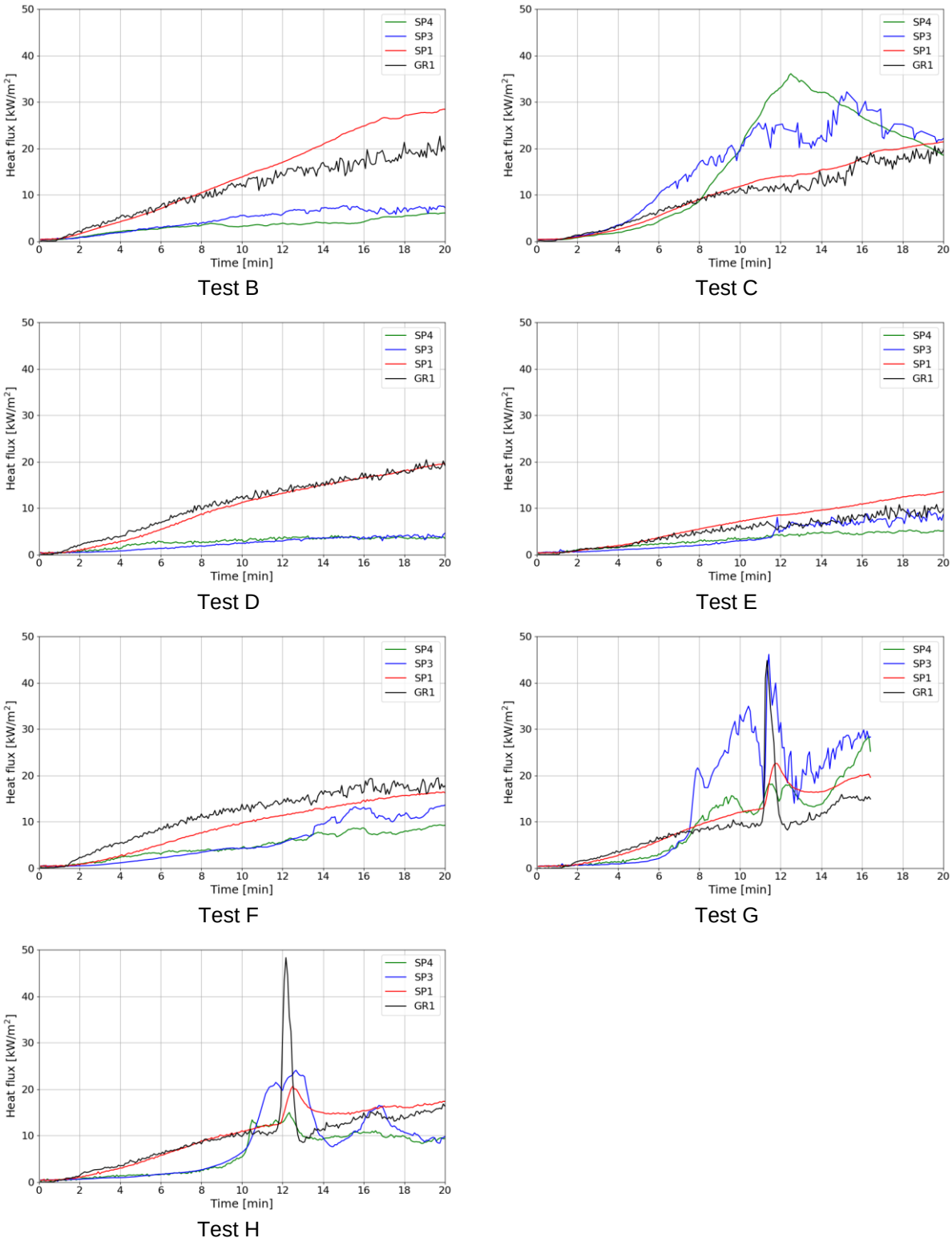

Figure C4-34 Measured heat flux facing the left-hand side of each balcony level

To assess whether lateral fire spread may have occurred, the time to a critical heat flux of 12.6 kW/m^2 (as also applied as one of the methods in Section C4-6.4.1) has been determined for each balcony level using the plate thermometer readings with the results are shown in Table C4-12. The critical heat flux was always achieved at Balcony 0 due to the radiant energy from the BS 8414 flames extending from the combustion chamber. Generally the times are similar (ca. 9 to 13 min), although Test E appears to be somewhat of an outlier.

Table C4-12 Times at which a heat flux of 12.6 kW/m^2 was first achieved at the left-hand balcony locations

Test	Balcony (Plate thermometer ID)		
	0 (SP1)	1 (SP3)	2 (SP4)
B	09:15	NA	NA
C	10:35	06:50	08:40
D	11:20	NA	NA
E	18:20	21:50	NA
F	13:35	15:20	51:25
G	10:50	07:40	08:40
H	11:55	10:45	10:30

NA Not achieved

As might be expected, the critical heat flux at Balcony 1 and Balcony 2 levels is achieved in those tests in which upward fire spread occurred. In Tests G and H, the heat flux measurements were influenced by the projection of flames from the edge of the balconies (Figure C4-35). In Test H, the time at which the critical heat flux is achieved is due to the rapid increase in measured values during the first peak burning phase (as shown in Figure C4-27) at which point a large flame is visible projecting from the left side of Balcony 1.

12:27 – Test C when plate thermometer SP4 shows peak heat flux

10:10 – Test G showing flame projection under Balcony 2 floor

12:10 – Test H showing flame projection under Balcony 1 floor

Figure C4-35 Views of the left side of the balconies in Tests C, G and H

C4-6.5 Vertical flame extension

Flame height is a function of the entrainment of air into the combustion zone. Similar to the effect of walls as discussed by Drysdale [11], even if a solid balustrade is made of non-combustible materials, its presence may cause an extension to the vertical flame height due to less air being available from the balcony side. Any vertical extension of the flame may increase the likelihood of upward fire spread between balconies if there are combustible materials located above the burning balcony.

To investigate whether there is any effect on flame height, a comparison is made between the thermocouple readings at the front of the balcony in Test A with Test D. These two tests are selected since Test A had no balustrade and Test D had the laminated glass balustrade which contributed little additional energy to the fire. From the instrumentation plan in Section C4-4, the thermocouples of interest are F8, F12, F16 and F19 (thermocouple F14 gave similar readings as F16 so are not included). Since the top edge of the balustrade on Balcony 1 in Test D ignited at around 08:10 which may then affect the temperature readings, Figure C4-36 is only extended up to 10 min after ignition of the BS 8414 crib.

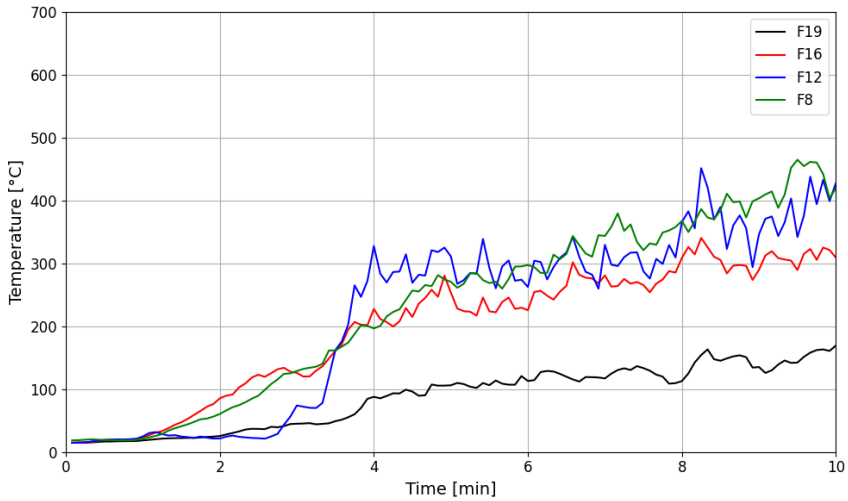

(a)

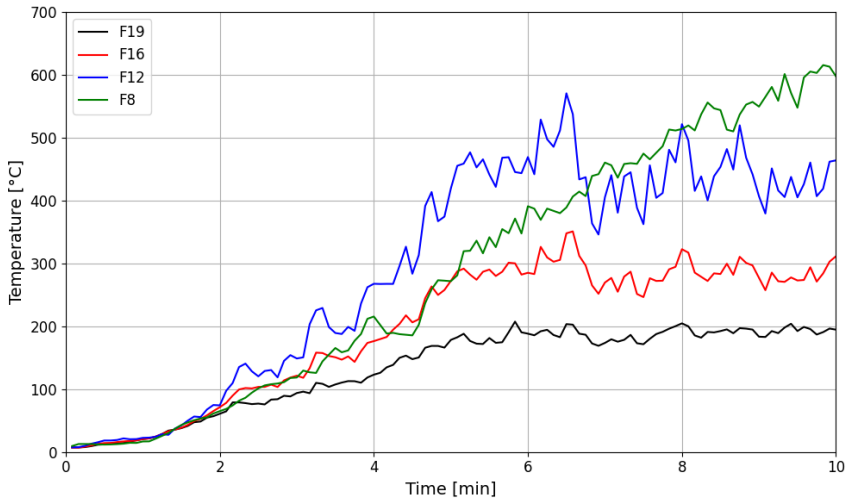

(b)

Figure C4-36 Thermocouple readings at the front balcony edge (a) Test A (b) Test D

Examining Figure C4-36 it is difficult to make any conclusive statements: the readings from thermocouple F8 below the edge of Balcony 1 are higher in Test D compared with Test A after around 03:00. However, thermocouple F12 does give higher readings from around 01:00 onwards, as do thermocouples F16 and F19 although the difference in the increase is less pronounced. On balance, the data would suggest there is some influence of the solid balustrade on the temperature profile, although it is not particularly significant and difficult to separate from the higher temperature readings given under the balcony.

C4-6.6 Non-combustible soffit panels

As noted in Section C4-3.5, the soffit solution employed in the tests reportedly achieved an EI 60 min rather than REI 30 min as given in AD B. The selection of the EI 60 min system was partly due to the availability of materials that could be mounted in a practical way to the balconies on the rig and also partly because of time pressure to complete the test programme. During Test F it was observed that one of the panels under Balcony 1 fell away at around 26:30 and although in Test H a panel under Balcony 1 did not fall away until around 47 min but was already showing signs of detachment at around 28 min.

In neither test was 60 min achieved under Balcony 1, but this result should not be construed that the performance of the panels as stated by the manufacturer is incorrect but is a reflection of the specific ad-hoc application in these tests. Although the panels achieved 60 min in a furnace, it does not mean they should achieve 60 min in real life. They may achieve a lesser time and still be adequate or they may achieve a longer time and still be inadequate. However, the findings suggest that the fire resistance (REI) of the system was less important when compared to the ad-hoc fixing arrangement that was necessary to install the panels. Thus, the results are somewhat representative of the performance of a REI 30 solution as expected if AD B was being followed since the panel system appeared to be compromised prior to 30 min in both tests.

C4-6.7 Heat flux to balcony soffits

The incident heat flux to the underside of the balconies has been estimated from plate thermometer (PT) temperatures. PTs were located on the underside of the central beam forming Balconies 1 and 2, with horizontal offsets of ca. 300 and 900 mm from the blockwork wall. Locations are shown indicatively in Figure C4-37.

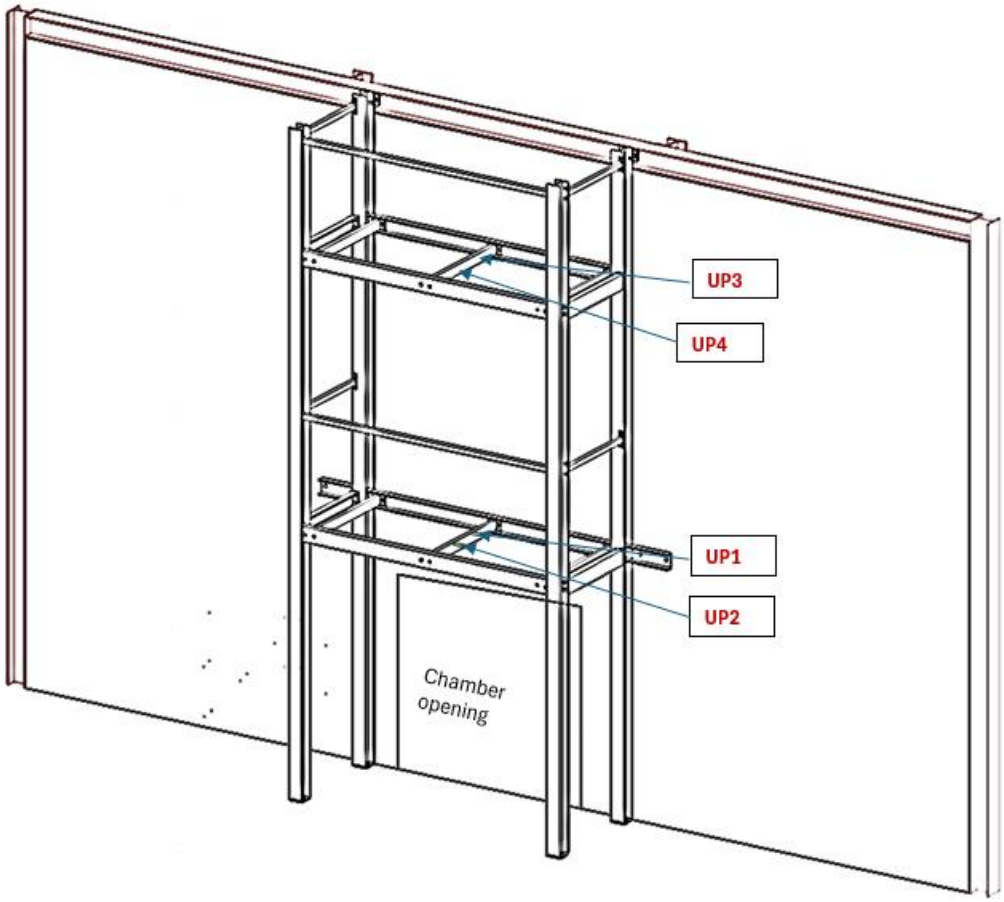

Figure C4-37 Location of balcony underside PTs

The time evolution of the estimated heat fluxes is shown in Figure C4-38. Test A gives insight into the heat flux to a balcony underside due to the crib in the combustion chamber, with peak values approaching ca. 130 kW/m^2. This could be considered indicative of the thermal exposure to a balcony from flames emanating from a fully developed fire through an opening at post-flashover.

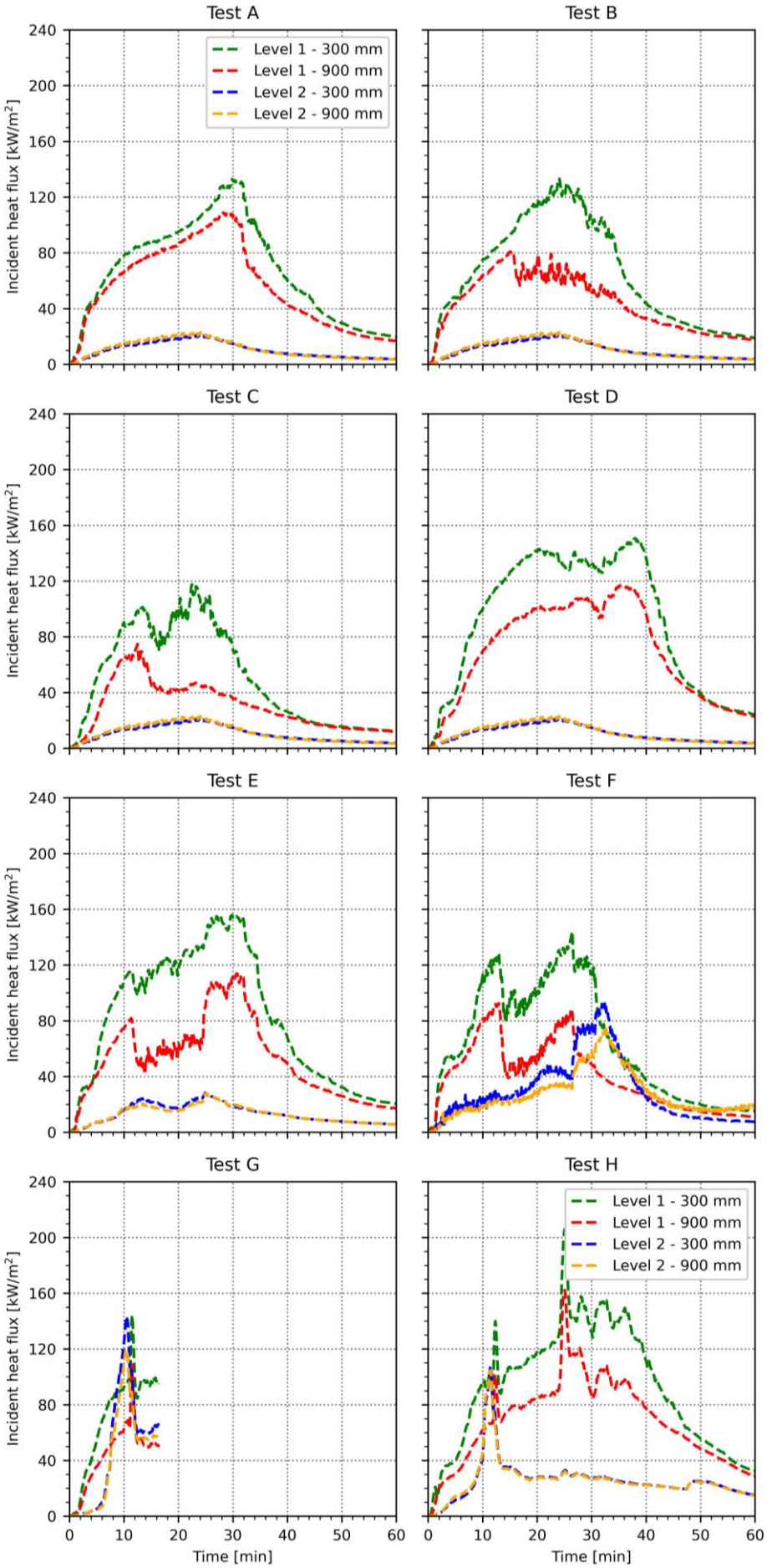

Figure C4-38 Heat flux to undersides of Balconies 1 and 2

Test B includes an indicative balcony fire load. Contrasting with Test A, it is seen that heat flux to the underside of Balcony 1 is largely insensitive to the contribution of the balcony fire load. It may be said that the presence of a balcony fire load in some manner reduced the thermal exposure the balcony soffits as burning ahead of the combustion chamber seemed to have both an influence on the plume geometry and, also, the burning efficiency of the BS 8414 crib present in the opening.

Where the thermal exposure to the underside of a balcony is highest, i.e., Balcony 1, a parameter influencing the severity of this thermal exposure appears to be the presence or otherwise of a non-combustible soffit. This serves to 'deflect' the flame and plume originating from the combustion chamber away from the blockwork wall, in the process increasing the flame depth below the soffit, resulting in higher heat flux values earlier on in the test. Similarly, cases with closed balustrades (e.g., laminated glass) tended to produce higher heat fluxes to the underside of Balcony 1 earlier in tests. It is expected that the balustrade in some manner affects the heat losses due to convection and radiation 'away' from the front of the balcony structures.

C4-6.8 Balcony steel temperatures

In each test a central beam forming Balcony 1 was instrumented with Inconel thermocouples to measure the steel temperature. This required the drilling of a small hole in the bottom flange of the channel (C) section and insertion of the TC. The measurement locations are shown in Figure C4-39. In cases where the non-combustible soffit was provided to Balcony 1, the beam bottom flange remained visible and, thus, directly exposed to fire. This is as shown previously in Figure C4-17. Time versus temperature plots for the C-section at Balcony 1 are shown in Figure C4-40.

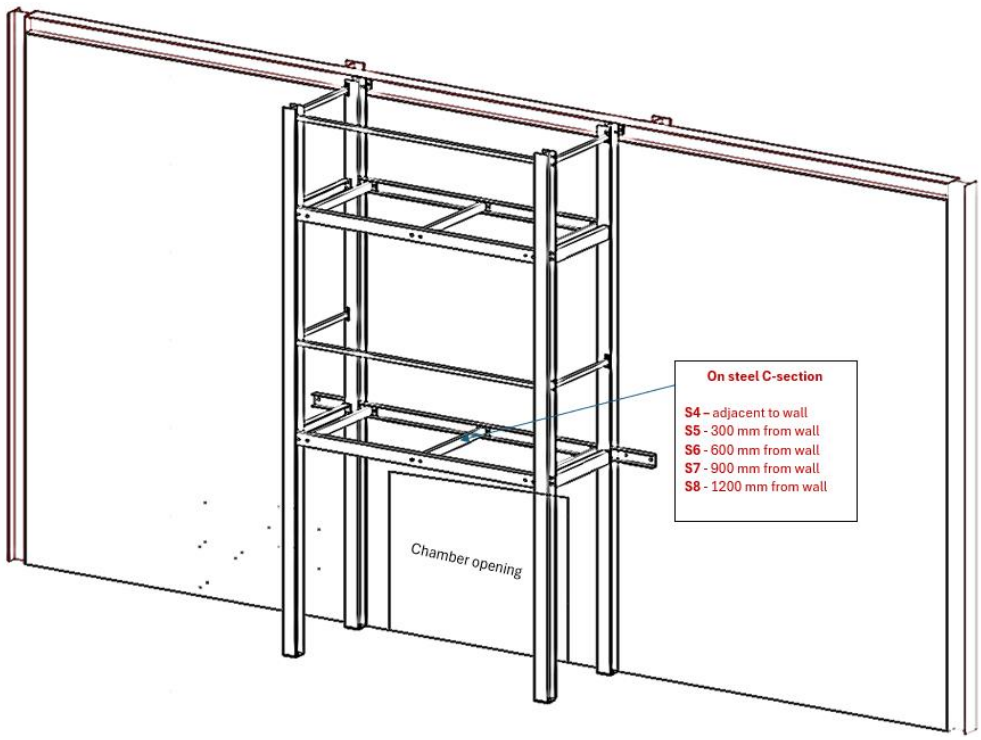

Figure C4-39 TCs to central steel beam on Balcony 1

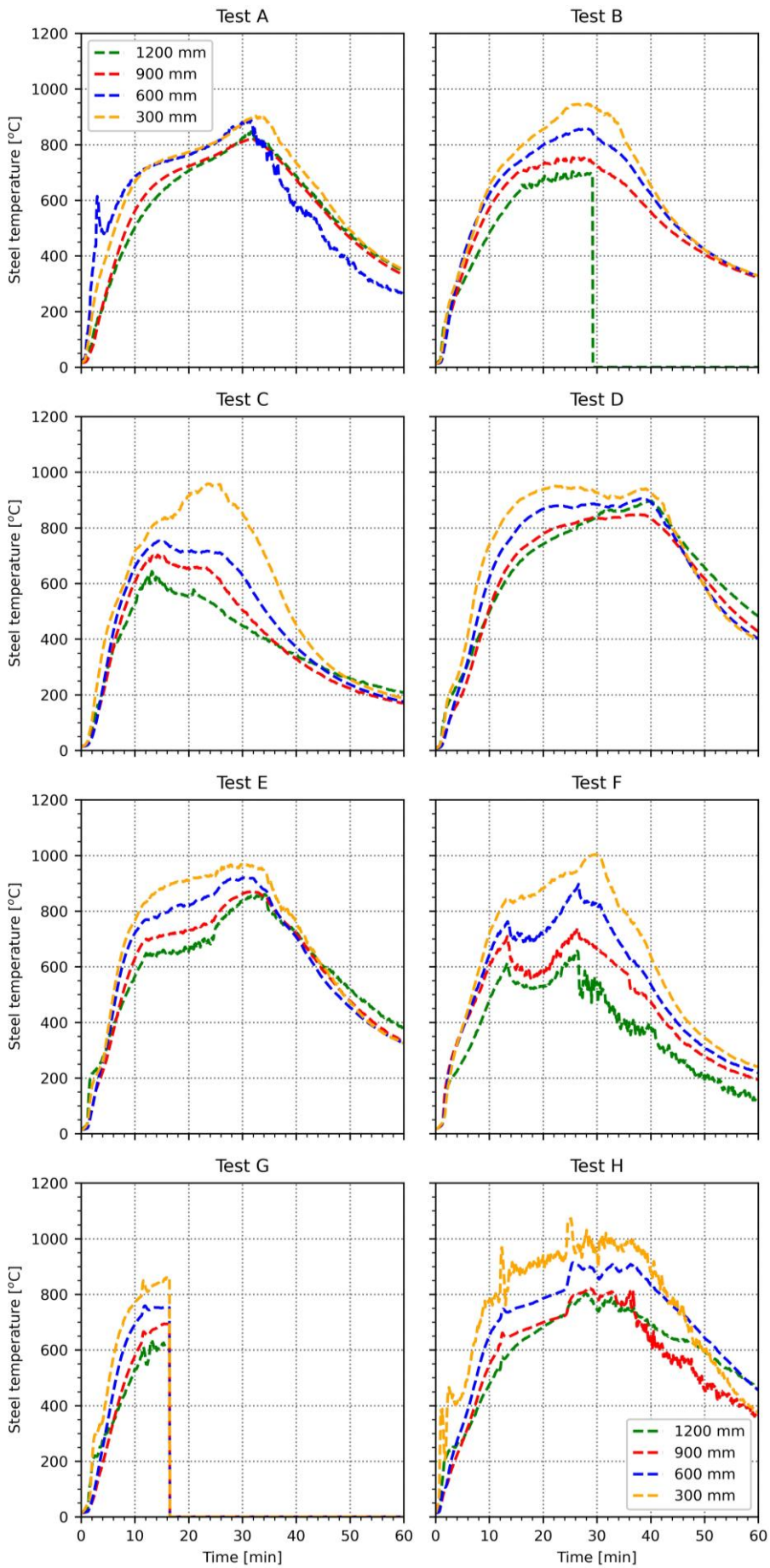

Figure C4-40 Balcony 1: central steel beam temperature with time

To compare the steel temperatures across tests, Figure C4-41 plots the range and distribution of temperatures attained by the C-section during the first 20 min from ignition. This takes the form of a violin plot, where: (i) the bar shows the range of values, (ii) the shaded region shows the distribution of values, and (iii) the dot shows the mean value. Owing to the early termination of Test G, the means, ranges and distributions are artificially low relative to the other tests.

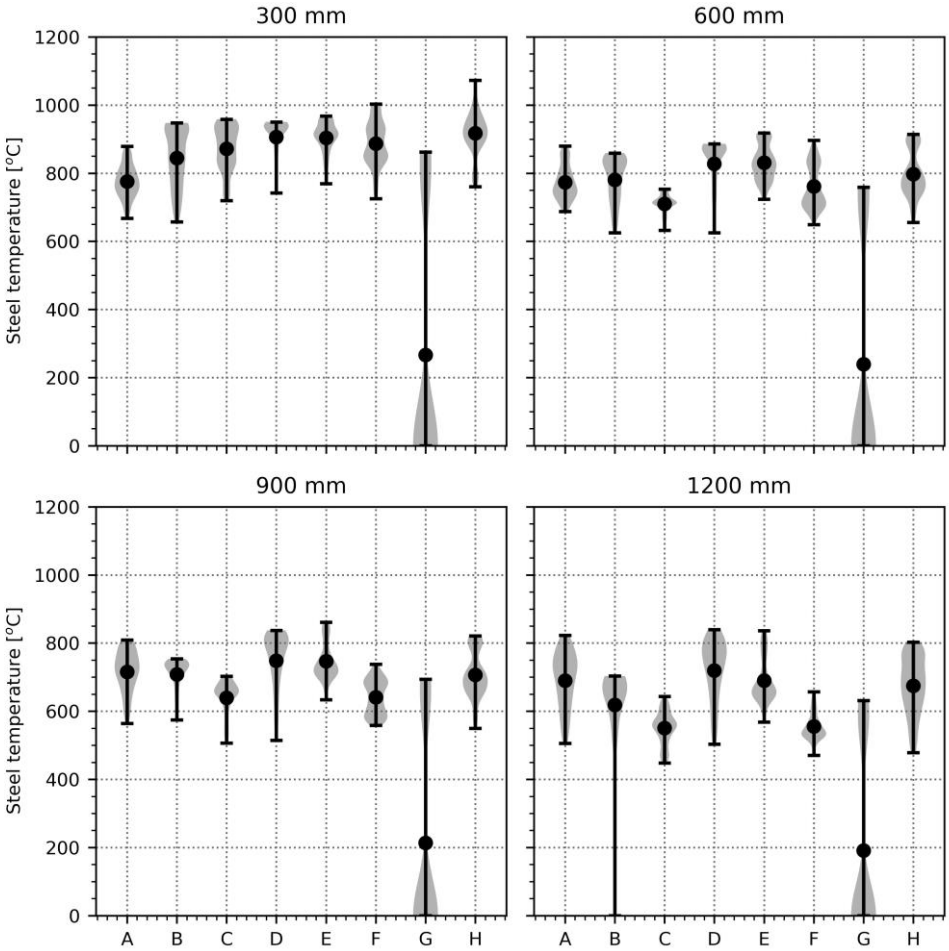

Figure C4-41 Balcony 1: central steel beam temperature violin plot for the first 20 min from ignition

It is observed that, away from the wall (i.e., ≥ 300 mm from the wall), there are no significant differences in the attained steel temperatures across tests. All peak values, however, are generally in exceedance of the typical critical temperatures associated with steel members which would suggest potential structural failure had the balconies been loaded in accordance with typical accidental loading conditions (i.e., per EN 1990 [12] and EN 1991-1-2 [13]). For reference, the National Annex to BS EN 1993-1-2 gives the limiting temperatures shown in Figure C4-42.

Description of member		Critical temperature (°C) for utilization factor μ0					
		0.7	0.6	0.5	0.4	0.3	0.2
a) Compression members:							
Non-dimensional slenderness,	$\bar{\lambda}$ = 0.4	485	526	562	598	646	694
	$\bar{\lambda}$ = 0.6	470	518	554	590	637	686
	$\bar{\lambda}$ = 0.8	451	510	546	583	627	678
	$\bar{\lambda}$ = 1.0	434	505	541	577	619	672
	$\bar{\lambda}$ = 1.2	422	502	538	573	614	668
	$\bar{\lambda}$ = 1.4	415	500	536	572	611	666
	$\bar{\lambda}$ = 1.6	411	500	535	571	610	665
b) Protected beam supporting concrete slabs or composite slabs		558	587	619	654	690	750
c) Unprotected beam supporting concrete slabs or composite slabs		594	621	650	670	717	775
d) Beam not supporting concrete slabs and members in tension		526	558	590	629	671	725

Figure C4-42 Extract from National Annex to EN 1993-1-2 – default limiting temperatures

In typical instances, the member utilisation under accidental conditions (μ_0) is in the range of 0.4 to 0.6. For a beam not supporting a concrete slab, this would give critical temperatures in the range of 558 to 629 °C. Were members to be heated above this threshold, they have the potential to undergo structural failure.

C4-6.9 Equivalent duration of furnace exposure to Balcony 1 steel members

To estimate what load-bearing fire resistance might be appropriate for balcony structures, the thermal exposure observed in the tests presented herein have been related to equivalent durations of furnace exposure, using two different time equivalency-based methods.

The first considers the incident heat flux to the C-section, establishing how the radiative component accumulates with time (the energy ‘dose’). This ‘dose’ which includes the incident heat flux during the growth, steady and decay phases of a fire is then compared to furnace exposure heating conditions [14] to establish how long it takes (the equivalent duration) to accumulate the same ‘dose’.

The second method considers the measured steel temperatures and establishes the required net-heat flux to yield such a temperature rise. Much like the incident heat flux method, this net heat flow is integrated with respect to time to establish the peak net energy flow during the tests, noting that net heat flow can be both positive (during heating) and negative (during cooling). The time taken to accumulate the same net heat flow under furnace conditions is then calculated to yield an equivalent duration of furnace exposure. Both methods and the results are expanded upon below.

C4-6.9.1 Equivalent cumulative radiative heat flux dose method

The equivalent cumulative radiative heat flux dose method is adopted within the B-RISK [15], [16] as one of the time equivalency tools for the purpose of relating physically based fire models to equivalent durations of furnace heating. In general terms, the equivalent incident heat flux dose is as below:

$$Q(t) = \int_0^t \sigma T^4 \, dt = \int_0^t \dot{q}''_{inc} \, dt$$

With $Q(t)$ the cumulative energy dose [kW] in function of time (t), σ the Stefan–Boltzmann (5.67×10^{-8} W·m^{-2}·K^{-4}) and T is the radiation source temperature [K]. Given the incident heat flux to the balcony soffit has been directly estimated in the tests from PT temperatures, this simplifies to the integral of $\dot{q}''_{inc}$, the incident heat flux [$\dot{q}''_{inc}$], with respect to time.

Under furnace conditions, the radiation source temperature (T_{iso} in K) is prescribed as [14]:

$$T_{iso} = 345 \log_{10}(8t_{iso} + 1) + 293$$

with t_{iso} the duration of furnace heating [min]. Figure C4-43 shows the range of $Q(t)$ calculated across the balcony tests in MJ via a grey shaded region. The mean value for all tests is shown as a dotted line. The accumulation of energy with time under furnace conditions is shown as a solid black line.

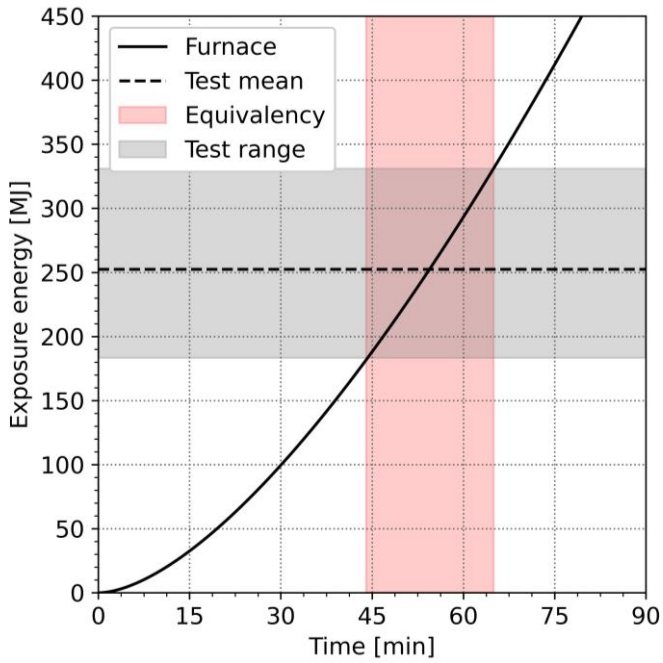

Figure C4-43 Exposure energy vs. time using the cumulative radiative heat flux dose

The range of equivalent duration of furnace exposure is then determined via the intersect of the grey shaded region and the solid black furnace curve, as shown in red. From this, it can be estimated that the balcony tests resulted in thermal exposure

conditions to the Level 1 soffit comparable to ca. 44 to 65 min of furnace exposure (mean value of ca. 55 min).

C4-6.9.2 Equivalent net heat flow method

The method presented in Section C4-6.9.1 sums the energy arriving at the surface of the steel element. However, depending on the temperature of the steel element, little may be absorbed and, thus, further raise its temperature. The energy per unit area per unit time absorbed by the structural element is the net heat flux and this absorbed energy can be used to also calculate equivalency [17]. Where the time history of the element is known, i.e., in this case through direct measurement using TCs, the energy required to bring about this temperature rise can be calculated and summed to determine the net energy flow. This net energy flow can be both positive when the element is heated and negative as it cools.

The net heat flux causing the temperature rise of the steel element has been determined using a lumped capacitance method from EN 1993-1-2 [18], where:

$$\dot{q}''_{net} = \frac{\Delta\theta_{a,t}}{k_{sh}\Delta t}\frac{c_a\rho_a}{H_p/A}$$

Where: $\theta_{a,t}$ is the temperature rise of the steel element [°C] during the time interval Δt [s], $\dot{q}''_{net}$ is the net heat flux to bring about the temperature rise during the time interval [W/m^2], k_{sh} is the correction factor for the shadow effect taken as 1.0 [-], H_p/A describes the section factor [m^{-1}], c_a is the specific heat of steel [J/kg.K] and ρ_a the density of steel [7850 kg/m^3]. In the case of the specific heat of steel, this is temperature dependant and is taken from EN 1993-1-2, Figure 3.4.

The accumulated net heat flow (E_{net} in J), is then:

$$E_{net} = \int_0^{t_{end}} \dot{q}''_{net}\ dt$$

with t_{end} reflecting the burnout time of the fire [s]. The net heat flow for Tests A to F with respect to time has been computed as shown in Figure C4-44. In the calculation of net heat flow, steel temperatures measured 600 mm from the wall are adopted as these broadly represent the mean steel temperature across the four locations where TCs were placed.

For equivalence purposes, the time temperature history of an unprotected steel element with the same section factor has been computed under furnace conditions. This is again via the lumped capacitance method in EN 1993-1-2. The incident heat flux leading to this rise is then summed and plotted in Figure C4-44 (black line). Unlike the tests presented here, the furnace time temperature continues to rise indefinitely, thus the net heat flow remains positive in all cases. However, it does begin to plateau as the steel and gas temperature converge.

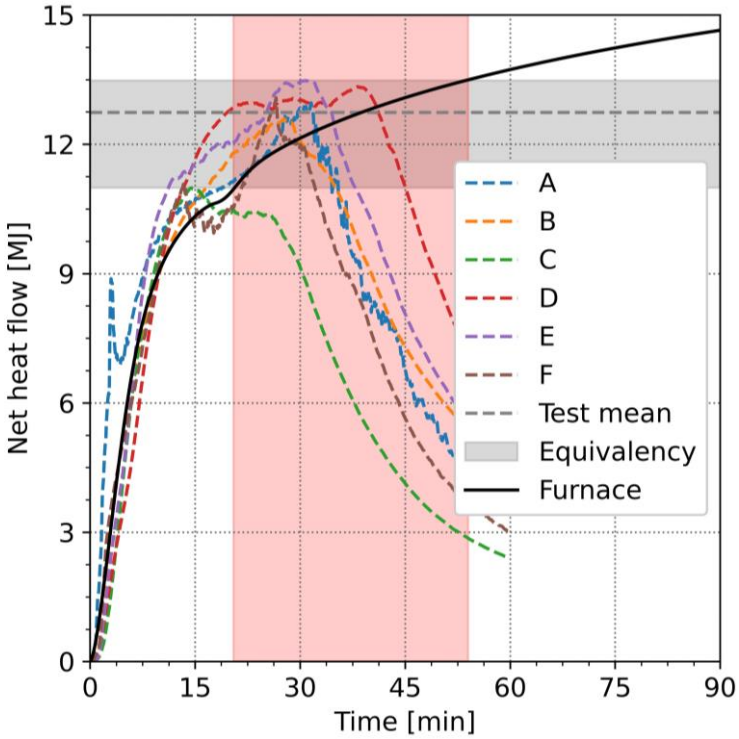

Figure C4-44 Net heat flow versus time for calculation of equivalency

When determining the time equivalence for this case, the peak heat flow in the tests is of interest as it is this that brings about the peak steel temperature before it begins to cool. The peak net heat flow values across tests A to F are represented by the grey shaded region. Where these intersect the black “furnace” curve, represents the time taken for the same net heat flow to be achieved under furnace conditions. The equivalent durations of furnace exposure are then represented by the red region. That is, based on the net heat flow during the tests, the equivalent duration of furnace exposure is between 20 to 52 min.

C4-7. Discussion

C4-7.1 Acceptable fire spread rate

C4-7.1.1 Vertically

Requirement B4(1) of schedule 1 of Building Regulations (2010) in England require that:

> *"The external walls of the building shall adequately resist the spread of fire over the walls and from one building to another, having regard to the height, use and position of the building."*

The Building Regulations do not make a specific statement in terms of fire spread between balconies and therefore it can be argued that the requirements for adequate resistance to fire spread over the external wall equally apply.

A detailed study of fire spread associated with external wall systems has been carried out as part of another research project being undertaken by OFR on behalf of the BSR. That OFR work identifies an important shift in expectations in relation to external fire spread and the envelopment of buildings that occurred as England's first Building Regulations were enacted. This moved the external wall from a feature that sought to contain fires to one that adequately delayed fire spread such that control or suppression via other means, e.g., firefighting, was plausible [19]. Fire Note 8 [19], when discussing the principles embodied in regulations discusses the experimental work of Ashton and Malhotra [20]. This experimental work observed that for an external fire to spread, it first had to develop, break through openings / external walls, and reach a severity whereby external flaming was sufficiently severe to support re-entry of the fire on the level above. Ashton and Malhotra pointed out that ignition of a combustible structure and furniture of a room immediately above a fire would not occur readily under flame attack for as long as 15 min, even when the under-window panels had no fire resistance. This 15 min duration was later adopted as an acceptance criterion by the BR 135 assessment of BS 8414 tests and appears in various international codes and standards since the initial observations by Ashton and Malhotra.

As such, 15 min has become considered by guidance to the Building Regulations as an implicit minimum delay for adequate resistance of external vertical storey-to-storey fire spread for the more common types of building situations. Within this context, it is useful to assess the results of the eight balcony fire tests presented by this study in which Section C4-6.4 has already collated findings. Where there are combustible items on the balconies it would be likely that a fire could spread from an internal space to the immediate balcony above (and also the balcony on the same level). Expecting buildings to adequately resist this spread would be unduly onerous. However, the possibility of fire to then vertically spread further would be something that has to addressed and therefore the time of fire spread from Balcony 1 to Balcony 2 from this study is of particular interest.

Section C4-6.4 examines three upward fire spread metrics; fire spread between the cribs representing the moveable fire load, fire spread between balconies with timber decks, time difference for the ignition of the HPL balustrade panels and a critical heat flux of 12.6 kW/m^2 at the wall. Table C4-13 shows the time difference for each metric when comparing Balcony 2 to Balcony 1.

Table C4-13 Time of fire spread from Balcony 1 to Balcony 2

Test	Time difference for the ignition of the moveable fire load	Time difference for the ignition of the timber deck	Time difference for the ignition of the HPL panels	Time difference to achieve a critical heat flux of 12.6 kW/m^2
A	-	-	-	NA
B	NS	-	-	NA
C	03:25	05:46	-	05:40
D	-	-	-	NA
E	NS	-	-	NA
F	31:03	24:40	-	23:55
G	-	04:25	03:09	03:10
H	-	13:19	07:00	24:05

NS No spread; NA Not achieved; - no data

The findings would suggest that Tests A, B, D and E do not result in any vertical spread between the two balconies when the available metrics are assessed. Test F provides times for three metrics where each exceed 15 min by at least around 9 min. Test H provides three metrics in which the critical heat flux time exceeds 15 min. However, the time to ignition of the timber deck and the HPL balustrade panels both fall below 15 min. Finally, Tests C and G both give times appreciably below 15 min whichever metrics are available.

C4-7.1.2 Horizontally

Not only can fire spread vertically but it also could spread horizontally to another separated balcony at the same level to one on fire or along a balcony that extends laterally across the façade such as an access balcony or similar. To assess horizontal balcony spread, Section C4-6.4.3 has identified when the measured heat flux reached a critical heat flux of 12.6 kW/m^2. To assess whether vertical or horizontal fire spread may be the dominating mechanism Table C4-14 compares the time to reach the critical heat flux on the wall behind the balcony with the time to reach the same critical flux at the lateral position. Where one or both locations did not achieve the critical value then a comparison is not possible.

Table C4-14 Time difference between the wall and lateral heat fluxes to reach 12.6 kW/m^2 on each balcony level

Test	Balcony 1	Balcony 2
B	NA	NA
C	04:45	00:55
D	NA	NA
E	09:50	NA
F	05:15	17:25
G	01:00	-01:10
H	01:55	-22:25

NA Not achieved

On Balcony 1 the wall always achieves 12.6 kW/m^2 before this critical heat flux is achieved at the lateral location which means acceptability is dictated by vertical spread. However, at Balcony 2 in Tests G and H the lateral position exceeded the critical flux sooner that at the wall. In Test G the difference is minimal but in Test H the time of lateral critical flux exceedance has a significant margin. Thus, lateral fire spread may occur sooner in Test H when compared to upward spread and acceptability may need to account for this possibility.

C4-7.2 Ranking

As noted in Section C4-6.4, heat release rate may be used as a proxy for fire spread. Thus, in order to rank the fire spread performance the approach used herein is to calculate the FIGRA range [7] for each test using the heat release data. FIGRA is a standardised method to obtain the maximum of the function of heat release versus time, i.e., the tangent from the origin to each point on the HRR(t) relationship. The heat release from the BS 8414 crib has a considerable influence on the measured heat release rate and represents the initiating fire not the fire performance of the balcony scenarios. Therefore, the FIGRA is calculated relative to the Test A baseline in which the heat release at each time step of a given test has the heat release rate from Test A subtracted. As a result, there is no FIGRA for Test A. Figure C4-45 shows the range of FIGRA values for Tests B to H in which the box elements show the mean and interquartile ranges, along with the maximum upper bound. The error bars indicate the minimum and maximum values.

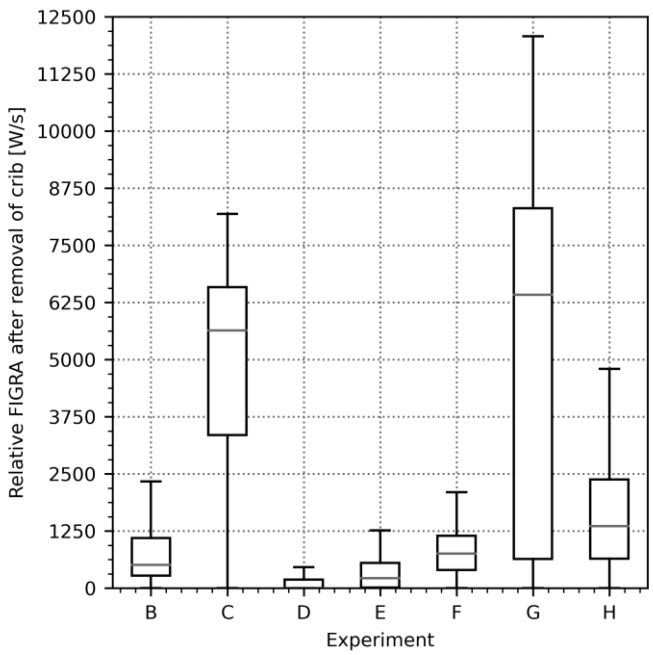

Figure C4-45 Range of FIGRA values for Tests B to H

Table C4-15 ranks the mean FIGRA values for each test in ascending order along with an assessment of the likely acceptability based on the findings discussed in Section C4-7.1.1.

Table C4-15 Fire spread performance ranking of tests using mean FIGRA values – best to worst. Colours indicate likely acceptability (green – acceptable; orange – marginal; red – unacceptable)

Test D – Non-combustible deck, laminated glass balustrade, no moveable fire load
Test E – Non-combustible deck, laminated glass balustrade, moveable fire load
Test B – Non-combustible deck, open balustrade, moveable fire load
Test F – Timber deck with soffit, open balustrade, moveable fire load
Test H – Timber deck with soffit, HPL balustrade, no moveable fire load
Test C – Timber deck, open balustrade, moveable fire load
Test G – Timber deck, HPL balustrade, no moveable fire load

A ranking based on the mean FIGRA provides an objective approach to assessing the fire spread performance but does not necessarily account for all the factors. A second approach uses a qualitative assessment of fire spread by considering not just the heat release rate but also the heat flux measurements, fire spread evaluations, etc. The outcome of this assessment is shown in Table C4-16, with a judgement of the likely acceptability of the outcome again based on Section C4-7.1.1. This qualitative ranking includes Test A and provides a slightly different rank order compared with Table C4-15.

Table C4-16 Qualitative ranking of fire spread performance of tests – best to worst. Colours indicate likely acceptability (green – acceptable; orange – marginal; red – unacceptable)

Test A – Non-combustible deck, open balustrade, no moveable fire load
Test B – Non-combustible deck, open balustrade, moveable fire load
Test D – Non-combustible deck, laminated glass balustrade, no moveable fire load
Test E – Non-combustible deck, laminated glass balustrade, moveable fire load
Test F – Timber deck with soffit, open balustrade, moveable fire load
Test H – Timber deck with soffit, HPL balustrade, no moveable fire load
Test G – Timber deck, HPL balustrade, no moveable fire load
Test C – Timber deck, open balustrade, moveable fire load

Along with ranking the tests, it is possible to use the findings to evaluate where in the ranking other balcony scenarios might fit. Table C4-17 provides an extended ranking of that given in Table C4-16 with a judgment made where selected additional scenarios might be placed in the ranking.

Table C4-17 Manual performance ranking of tests and likely positions of other selected scenarios – best to worst. Colours indicate likely acceptability (green – acceptable; orange – marginal; red – unacceptable)

Non-combustible deck, non-combustible balustrade, moveable fire load or not
Test A – Non-combustible deck, open balustrade, no moveable fire load
Test B – Non-combustible deck, open balustrade, moveable fire load
Test D – Non-combustible deck, laminated glass balustrade, no moveable fire load
Test E – Non-combustible deck, laminated glass balustrade, moveable fire load
Test F – Timber deck with soffit, open balustrade, moveable fire load
Timber deck with soffit, laminated glass balustrade, moveable fire load
Non-combustible deck, HPL balustrade, moveable fire load or not
Test H – Timber deck with soffit, HPL balustrade, no moveable fire load
Timber deck, laminated glass balustrade, moveable fire load or not
Test G – Timber deck, HPL balustrade, no moveable fire load
Test C – Timber deck, open balustrade, moveable fire load

C4-7.3 Implications for structural stability

Sections C4-6.7 to C4-6.9 have discussed the thermal exposure to the Level 1 balcony soffits, the implications for the temperatures of steel elements and what fire resistance they may need to withstand such an exposure.

The thermal exposure to steel beams forming the Level 1 balcony soffits was significant and generally in line with that expected 1 m above the combustion chamber in a

BS 8414-1/2 test, i.e., > 100 kW/m^2. Figure C4-46 plots the distribution of incident heat flux 10 to 30 min from ignition of the crib for each test. Results are shown for Level 1 and Level 2. Only the mean value for Test G is shown, due to a lack of data owing to early termination.

As has been shown previously in Figure C4-41, at Level 1 this incident heat flux leads to unprotected steel temperatures much in excess of conventional critical temperatures recommended for beams and columns, i.e., recorded steel temperatures reached up to 1000 °C. Therefore, had the balcony been subject to an expected accidental load as set out in EN 1990 [12] / EN 1991-1-1 [13], it is probable that a structural failure would have occurred.

In the consortium's view, the incident heat flux to balcony elements and the resulting implications for the realised steel element temperatures justify a need for elements forming balconies to achieve minimum levels of fire resistance. These minimum levels are discussed in Section C4-7.4.

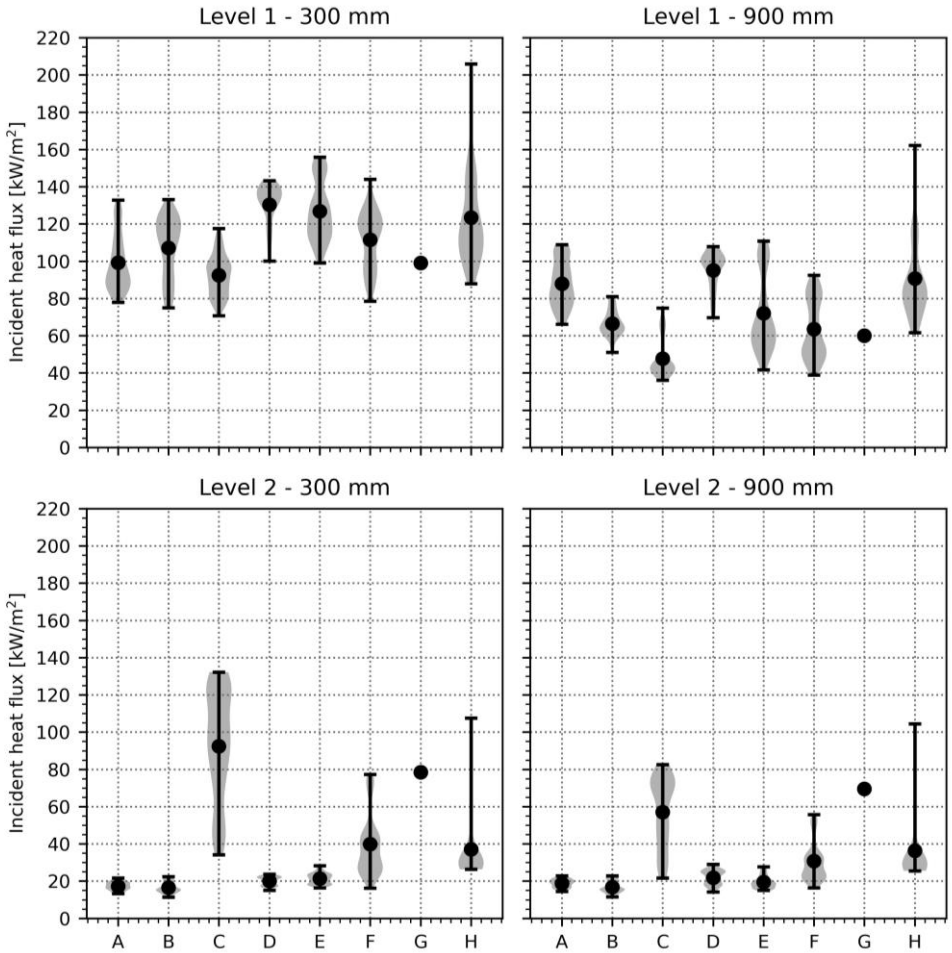

Figure C4-46 Violin plot of incident heat flux to balcony soffits for each test for the time range of 10 – 30 min from crib ignition

C4-7.4 Equivalent duration of furnace exposure for steel elements and implications for structural fire resistance

Section C4-7.3 identifies that the thermal exposure from the combustion opening in the tests was sufficient to raise unprotected steel temperatures above those typically associated with structural failure. Given the crib size and opening broadly replicate that adopted in the BS 8414-1/2 testing protocol, it is reasonable to suggest (based on evidence developed in the aforementioned supporting research contract on external wall systems) that the thermal exposure is representative of a post-flashover fire, where flames emanate from openings. Therefore, a minimum amount of fire resistance to mitigate structural failure is justified given the potential implications of balcony structural failure for those in or around a building.

Equivalency based methods provide a means of correlating realistic fire exposure (like in the tests presented herein) to the thermal exposure used for product classification purposes, i.e., furnace exposure and fire resistance ratings. Several different equivalency methods exist, as discussed in Xie et al. [21]. This study has applied two equivalency methods in Section C4-6.9 to estimate what fire resistance might be appropriate so that balcony elements can remain stable for the full duration of a fire event. This range was 44 to 65 min of furnace exposure (mean value of ca. 55 min) for the cumulative radiative heat flux method. The range reduces to 20 to 52 min (mean value of ca. 38 min) when adopting the net heat flow equivalency method. It would therefore appear that a case could be made for balcony structural elements achieving fire resistance consistent with that of internal structural elements or 60 min, whichever is the lesser. For low-rise cases, this should mitigate premature failure of the balcony elements, i.e., aligning expectations to that of the structural frame supporting the building. For higher consequence cases, the balcony elements would have a reasonable likelihood of surviving the full duration of the fire, thus aligning with the objectives underpinning the fire resistance demands for medium- and high-rise buildings [22].

C4-7.5 Limitations

The testing protocols adopted in this study exhibit several notable limitations which may lead to incomplete assessments of balcony fire safety risks in real-world applications. The limitations are the result of many factors including the available resources in terms of time and budget, what is practical within the laboratory in terms of space, equipment, safety, etc. As such, the findings in this report are informative but should not be treated as design guidance. Several of these key limitations are noted below:

Wind effects: These tests do not account for any wind effects that may enhance the burning of combustible items and may also modify the flame direction. For example, a wind may push flames toward the wall, or it may cause flames to be directed laterally to one side.

Balcony fuel load: The fuel load survey shows that the contents of balconies vary due to a range of factors that may be regional, seasonal etc. In this work the fuel load has been represented by a crib of a mix of wood and plastic that has been located at a specific location on the balcony with a fixed height.

Deck material: The tests have not considered the use combustible decking materials other than untreated timber that may be used in construction, noting that **Appendix A/B** discusses BS 8579:2020 [23] which recommends the use of A2-s1, d0 materials in all buildings over 11 m in height and in buildings of any height when balconies are stacked.

Balustrade configuration: The balustrades that used laminated glass had a selected thickness, laminate type and fixing arrangement. This represented only one of a range of thicknesses, laminate types, edge conditions and/or fixing types. The open balustrade did not contain any vertical balusters, and no work has been done to assess when a balustrade will begin to act as an obstruction to the flame etc.

Vertical arrangement: The test balconies were uniformly stacked at a 2.7 m floor-to-floor height. A floor-to-floor distance of around 3 m would represent a typical minimum inter-storey height. The shorter 2.7 m distance was partly as a result of the limited space available under the oxygen calorimetry hood but also provided onerous balcony-to-balcony fire spread conditions.

Non-combustible soffit: Although as discussed in Section C4-6.6 the non-combustible soffit system used in the tests appeared to not achieve its expected EI 60 it did not represent those used in practice to meet REI 30 given in AD B. Systems such as 2 mm thick folded aluminium sheet, or 8 mm thick fibre-cement butt-jointed panels are more typical treatments.

Balcony dimensions: The 3.76 m^2 rectangular balcony area was based on the fuel load survey given in **Appendix C1**. This is smaller than the largest typical balcony size of around 6 m^2 that might be used on buildings without needing rainwater pipes (RWP). The size of the balcony was somewhat limited by the practicalities of installing the rig in the laboratory and a larger balcony would have likely resulted in higher heat release rates when combustible elements were included which may have led to the need to terminate tests earlier. It is posited that larger balconies would have resulted in less vertical flame projection at the front / side edges depending on the balcony length and depth. In addition, the tests do not consider the window to balcony width ratio, which may have an influence on fire development. Yokoi’s seminal work [24] investigated flame characteristics from windows with and without horizontal projections.

Repeated tests: Compounding the above issues are the lack of repeated tests, which could provide more robust and reliable data. However, the available resources precluded the option to carry out more than one test for each scenario.

C4-8. Conclusions

The following conclusions are drawn from this work:

Moveable fire load: The presence of a moveable fuel load will likely impact on a balcony fire. Different material types, arrangements, etc. will likely have different effects. Combustible items could modify the airflow in and around a balcony, have the potential to be ignited, contribute to the heat release rate, and change the flame dynamics. Depending on the materials and balcony configuration, such combustible materials may also be a source of further fire spread. Upward fire spread may be enhanced by burning material, and downward fire spread could be caused by dripping and/or falling material. Combustible objects might also be one of the items that gets first ignited rather than the case of where a fire spreads from inside the building via windows or doors. Non-combustible items may have an impact on fire spread by shielding combustible materials and may also modify the airflow in and around a balcony.

Exposed timber deck: The balconies with the timber deck exposed to fire from the underside exhibited the worst fire performance of those examined. The fire rapidly spread to multiple balconies, with burning observed within around 7 min and 9 min on Balcony 2 in Tests C and G respectively. Whether having smaller gaps between the decking planks would have reduced the time to spread has not been investigated, but even if it did, it may be difficult to control the spacing during construction.

Based on the findings from the test with exposed timber deck (Test C) and the test with both the deck and combustible balustrade (Test G) it is likely that the fire performance of a balcony with an exposed timber deck will not be much different with other balustrade types (e.g. laminated glass or solid non-combustible construction). This is because the presence of the exposed timber deck appears to be the dominant factor rather than the balustrade.

Laminated glass balustrades: The tests carried out in this study used laminated glass balustrade designs that were likely to give conservative fire performance. According to discussions with industry representatives, the thickness of the glass in the tests was at the lower end of what would likely be used on high-rise balconies. It is also expected that the glass would be mounted in a channel rather than having an open gap between the balcony floor and the underside of the glass. In addition, various capping arrangements might be used depending on the specific balustrade design. Even so, the results from the tests show that the presence of laminated glass does not make a significant impact on the likelihood of upward fire spread during the initial phase of a fire (i.e. with the first 15 to 20 min) since there was no fire spread to the upper balcony (Balcony 2). The fuel load introduced by a laminated glass balustrade is likely to be small when compared to the moveable fuel load, and the balustrade may increase the time to ignition of that fuel load by separating it from the flames from below the balcony floor.

Although not observed in the full-scale balcony tests carried out in this study, it is recognised that burning laminate could drip from the glass panels which has the potential to ignite other combustible materials on the balcony on which the balustrade is installed or further down. This hazard could be mitigated through having non-perforate balconies floors and also having the glass set away from the edge of the balcony. It would appear that structural standoff balustrades would not be the best option for mitigating ignition via dripping laminate.

These tests have demonstrated that as a fire progresses it is possible that glass panels will fail which can then fall away from the balustrade. Falling glass could provide a downward fire spread mechanism if the laminate is still burning with the potential to ignite other combustible materials levels below a balcony that is on fire. The results from the tests had glass starting to fall away from the balconies local to the fire after around 22 min. Falling panels could also be an impact hazard to people in the vicinity of the balconies, but this might not be any different to other falling material hazards that occur with other balustrade systems or other façade systems.

Non-combustible soffit: Tests F and H investigated the fire performance of a non-combustible soffit on the underside of balconies with timber decking. It is noted that AD B specifies the soffit to achieve at least REI 30 although it is unclear how an R performance is likely to be achieved given the soffit in itself is not load-bearing. In this study the soffit panels were quoted as achieving EI 60 which means an exact comparison with the minimum expectations of AD B has not been possible. Test F had exposed timber decking, the moveable fire load and open balustrades showing an improved fire performance when compared to Test C. Although the fire did spread to Balcony 2 in Test F, this took over 30 min. Test H had the HPL balustrade installed where again the fire spread to Balcony 2 in around 30 min. Therefore, the provision of the soffit did slow, but not prevent, the upward fire spread.

In practice it would appear that where the balustrade is made of a combustible material (such as HPL) in combination with timber decking then installing a non-combustible soffit may not be sufficient and that replacing the balustrade with a non-combustible balustrade would be recommended. Given the observed performance of the laminated glass balustrade then replacing the combustible balustrade material with laminated glass would also appear to be a viable alternative.

Non-combustible balconies: Balconies with both a non-combustible deck and non-combustible imperforate balustrade would likely have a fire performance as good as, or better than a balcony with a non-combustible deck and open balustrade. When compared to having an open balustrade, the imperforate balustrade may reduce the heat flux to the façade and reduce the ignition likelihood of moveable fire load on the balcony, as observed when the laminated glass balustrade was installed.

Balconies with solid balustrades are likely to change the entrainment of air into the combustion zone of any nearby flames and therefore have could an impact on flame height, etc. Findings from this study are not especially conclusive, but it would appear

that the presence of the solid balustrade did not have a significant impact on the flame height at the front of the balcony.

Combustible balustrades: Some implications of having combustible balustrades are addressed in other statements in this section. The presence of a combustible balustrade provides additional energy to the fire should it ignite, and in turn can contribute to the likelihood of upward fire spread.

In addition to upward fire spread, the use of combustible balustrades may also contribute to downward spread. In Tests G and H the balustrades using HPL panels resulted in the falling away of pieces of burning material. It needs to be noted that the test balustrades consisted of HPL panels that were spaced apart to represent the Hallam Court incident. It is uncertain whether larger, single-piece panels of HPL would exhibit the same falling behaviour, but it would likely depend on factors as the width of the panels, how they form the balustrade, fixing methods, etc. Similarly, the performance of balustrades that use other combustible materials may not be the same as exhibited in this study.

It is speculated that the fire performance of a balcony with a combustible balustrade and a solid non-combustible floor would likely perform similar to (if not better than) Test H. In that test the non-combustible soffit delayed the ignition of the timber deck, but fire was still able to spread between the balconies apparently via the moveable fire load at around 30 min after ignition. One difference of having a non-combustible deck is obviously that there would not be flooring material to burn and spread fire. However, a non-combustible floor will unlikely impact on any falling material behaviour.

Lateral fire spread: The results from the tests illustrate that lateral fire spread is likely to occur on the same balcony level should a fire start inside the building and reach a fully developed phase in which flames exit an opening on the external wall and there are combustible items in close vicinity. This fire spread might occur after around 10 – 12 min from the flames extending from the opening. On higher balconies the likelihood of lateral fire spread will depend on whether the fire is able to spread vertically via the moveable fire load, combustible decking etc. In general, upward fire spread is likely to be more influential when compared to lateral spread although the test results suggest that this might not be the case for some balcony configurations that include timber decks.

Stability of balcony structures in fire: The tests have shown that the thermal assault from a situation comparable to flames emanating from a post-flashover fire is sufficient to raise unprotected steel temperatures beyond those typically associated with structural failure (critical temperature). Given this, it is the consortium’s view that a minimum fire resistance expectation should be placed on structural elements forming or supporting balconies. Using two different equivalency-based methods, it is suggested that the fire resistance of elements forming or supporting balconies should either align with the fire resistance period for the building or achieve 60 min, whichever is the lesser. For low-rise cases, this should mitigate premature failure of the balcony

elements, i.e., aligning expectations to that of the structural frame supporting the building. For higher consequence cases, the balcony elements would have a reasonable likelihood of surviving the full duration of the fire, thus aligning with the objectives underpinning the fire resistance demands for medium- and high-rise buildings.

FIGRA: The study has shown that it is possible to determine the FIGRA for the balcony fire tests using Test A as the baseline to modify the heat release data from the other tests. However, the FIGRA method was not originally designed for balcony fires. Care should therefore be exercised interpreting the FIGRA results, and this work is not advocating that this should form part of a regulatory assessment system.

C4-9. Further work

As discussed in Section C4-7.5, there are a number of limitations associated with the test programme. Therefore, there are additional areas of work that could follow on from this research, some of which are suggested below. In general, the suggestions are extensions to the tests already carried out, but could also include numerical simulations (see **Appendix C5**) and/or other analytical approaches:

- The research has only considered untreated class D timber decking but there are alternative materials available on the market that could be used to create a balcony floor. Future work could therefore investigate the fire performance of other decking materials which could be treated timber and composite materials (such as mixtures of wood fibre and recycled plastic). The work could also investigate how much the gaps between the decking material influences fire spread.
- The current work has assessed three different balustrade configurations: open, laminated glass, and HPL panels. Additional work could verify the fire performance of balconies with non-combustible balustrades such as metal panels, blockwork construction, etc. Other combustible balustrade materials such as timber could also be included. This work could be alongside the investigation of alternative decking materials.
- In this research it has been assumed that the initiating fire begins within an enclosure adjacent to a balcony. The initiating fire reaches a post-flashover, fully developed stage which leads to the exposure of balconies from flames projecting through a window or door-like opening. Further work could assess how fires that start on a balcony might perform in terms of the potential to spread a fire to another balcony level, igniting exposed timber decking, the time equivalence performance, etc.
- The current work has not considered how the balconies are attached to the building structure. In many cases the balconies are fixed to the (steel, masonry, etc) structure using pillars or other fixing methods which may be impacted by the exposure to fire. Future work could be carried out to investigate different fixing systems and how risks may be mitigated through passive fire protection methods.
- To focus on the performance of the balcony and any associated moveable fire load the building structure representation in the current work did not include any form of combustible façade or other external wall system. Further work could be undertaken to investigate combinations of balconies and different external wall systems to account for realistic building fire scenarios. OFR has internally carried out a desk-based assessment of fire incidents that have had a combination of balcony and wall systems that could be further expanded.

- In the current study the moveable fire load on the balconies has been idealised as a crib using a combination of wood and a plastic material. As noted in the Hallam Court incident, the owners of balconies may place a range of different materials and items on balconies that could impact on fire spread. For example, the use of combustible privacy screens (made of bamboo or similar materials) may be used around the perimeter of a balcony. Such practices are likely to alter the development of a fire on a balcony and therefore the likelihood of spread to other balconies. Future work could investigate the impact of different moveable fire load arrangements.
- The non-combustible soffit solution used in the study reportedly achieved EI 60 rather than REI 30 as given by AD B. Further work should investigate soffit solutions, as noted in Section C4-7.5, that match AD B's expectations.
- The laminated glass balustrade used in the tests employed a specific configuration of glass thickness, laminate type, no edge sealing, fixing hardware, and a 50 mm gap between the balcony deck and the glass panels such that further work could investigate other configurations. For example, the use of a base-channel rather than having a gap is a common balustrade configuration.

C4-10. Acknowledgements

The authors would like to thank Mr. M. McKee, Mr. G. Remy and Mr. S. Vellukkandy from Efectis for their assistance with the test programme.

C4-11. References

[1] S. Bryant, I. Rickard, and M. Spearpoint, ‘A survey of fire loads on private residential balconies in England’, *Fire Technology*, vol. 59, pp. 3415–3443, Jul. 2023, doi: 10.1007/s10694-023-01467-8.

[2] BSI, ‘BS 8414-1:2020 Fire performance of external cladding systems. Part 1: Test methods for non-loadbearing external cladding systems fixed to, and supported by, a masonry substrate’, BSI, London, 2020.

[3] BSI, ‘BS 8414-2:2020 Fire performance of external cladding systems. Part 2: Test methods for non-loadbearing external cladding systems fixed to, and supported by, a structural steel frame’, BSI, London, 2020.

[4] BSI, ‘BS EN ISO 1716:2018 Reaction to fire tests for products. Determination of the gross heat of combustion (calorific value)’, BSI, London, 2018.

[5] BSI, ‘BS EN 14915:2013+A1:2017 Solid wood panelling and cladding. Characteristics, requirements and marking’, BSI, London, 2013.

[6] M. K. Hassan *et al.*, ‘Effect of interlayer materials on fire performance of laminated glass used in high-rise building: Cone calorimeter testing’, *Fire*, vol. 6, no. 3, Art. no. 3, Mar. 2023, doi: 10.3390/fire6030084.

[7] BSI, ‘BS EN 13501-1:2018 Fire classification of construction products and building elements. Classification using data from reaction to fire tests’, BSI, London, 2018.

[8] HM Government, ‘The Building Regulations 2010, Approved Document B (Fire Safety) Volume 2: Buildings other than dwellinghouses (2019 edition incorporating 2020 and 2022 amendments)’, Dec. 2022.

[9] A. Häggkvist, J. Sjöström, and U. Wickström, ‘Using plate thermometer measurements to calculate incident heat radiation’, *Journal of Fire Sciences*, vol. 31, no. 2, pp. 166–177, Mar. 2013, doi: 10.1177/0734904112459264.

[10] BSI, ‘PD 7974-1:2019 Application of fire safety engineering principles to the design of buildings. Initiation and development of fire within the enclosure of origin (Sub-system 1)’, BSI, London, 2019.

[11] D. Drysdale, *An Introduction to Fire Dynamics*, Third Edition. John Wiley & Sons, Ltd, 2011. doi: 10.1002/9781119975465.ch1.

[12] BSI, ‘BS EN 1990:2002+A1:2005 Eurocode. Basis of structural design’, BSI Standards Publication, London, 2005.

[13] BSI, ‘BS EN 1991-1-2:2002 Eurocode 1. Actions on structures. General actions. Actions on structures exposed to fire’, British Standards Institution, London, 2002.

[14] ISO, ‘ISO 834-14:2019 Fire-resistance tests. Elements of building construction. Requirements for the testing and assessment of applied fire protection to solid steel bar’, ISO, Geneva, 2019.

[15] C. Wade, G. Baker, K. Frank, R. Harrison, and M. Spearpoint, ‘B-RISK 2016 user guide and technical manual’, Building Research Association of New Zealand, SR364, 2016.

[16] C. A. Wade, C. M. Fleischmann, M. J. Spearpoint, and A. K. Abu, ‘Revisiting normalised heat load and its application in a compartment fire model’, in *14th International Fire and Materials Conference*, S. J. Grayson, Ed., San Francisco, USA, Feb. 2015, pp. 682–697.

[17] V. K. R. Kodur, P. Pakala, and M. B. Dwaikat, ‘Energy based time equivalent approach for evaluating fire resistance of reinforced concrete beams’, *Fire Safety Journal*, vol. 45, no. 4, pp. 211–220, Jun. 2010, doi: 10.1016/j.firesaf.2010.03.002.

[18] BSI, ‘BS EN 1993-1-2:2005 Eurocode 3. Design of steel structures. General rules. Structural fire design’, BSI, London, 2005.

[19] G. J. Langdon-Thomas and M. Law, ‘Fire and the external wall’, Joint Fire Research Organisation, Boreham Wood, England, Fire Research Note 8, 1966.

[20] L. A. Ashton and H. L. Malhotra, ‘External walls of buildings - Part 1. The protection of openings against spread of fire from storey to storey’, Fire Research Station, Boreham Wood, Fire Research Note 436, 1960.

[21] P. Xie, A. Abu, and M. Spearpoint, ‘Comparison of existing time-equivalence methods and the minimum load capacity method’, in *Fire Science and Technology 2015*, K. Harada, K. Matsuyama, K. Himoto, Y. Nakamura, and K. Wakatsuki, Eds., Singapore: Springer, 2015, pp. 263–271. doi: 10.1007/978-981-10-0376-9_26.

[22] A. Law and L. Bisby, ‘The rise and rise of fire resistance’, *Fire Safety Journal*, vol. 116, p. 103188, Sep. 2020, doi: 10.1016/j.firesaf.2020.103188.

[23] BSI, ‘BS 8579:2020 - Guide to the design of balconies and terraces’, BSI, London, 2020.

[24] S. Yokoi, ‘Study on the prevention of fire spread by hot upward current’, Building Research Institute, Japan, Report 34, 1960.

Test date: 13th of November 2023

Project Nr: EUI-23-000746

Test Nr: EUI-23-CHB-000746A

1. INSTRUMENTATION LAYOUT

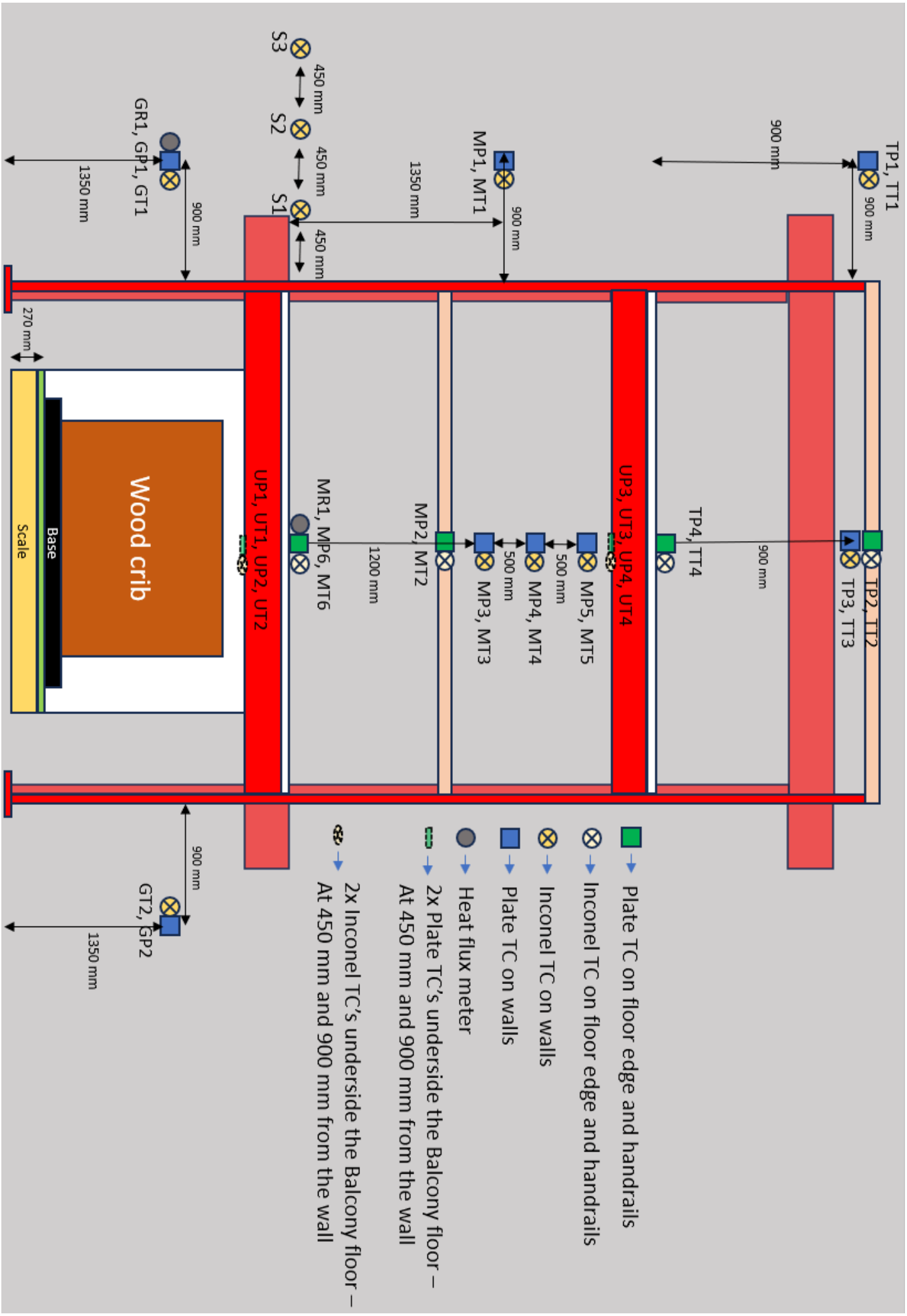

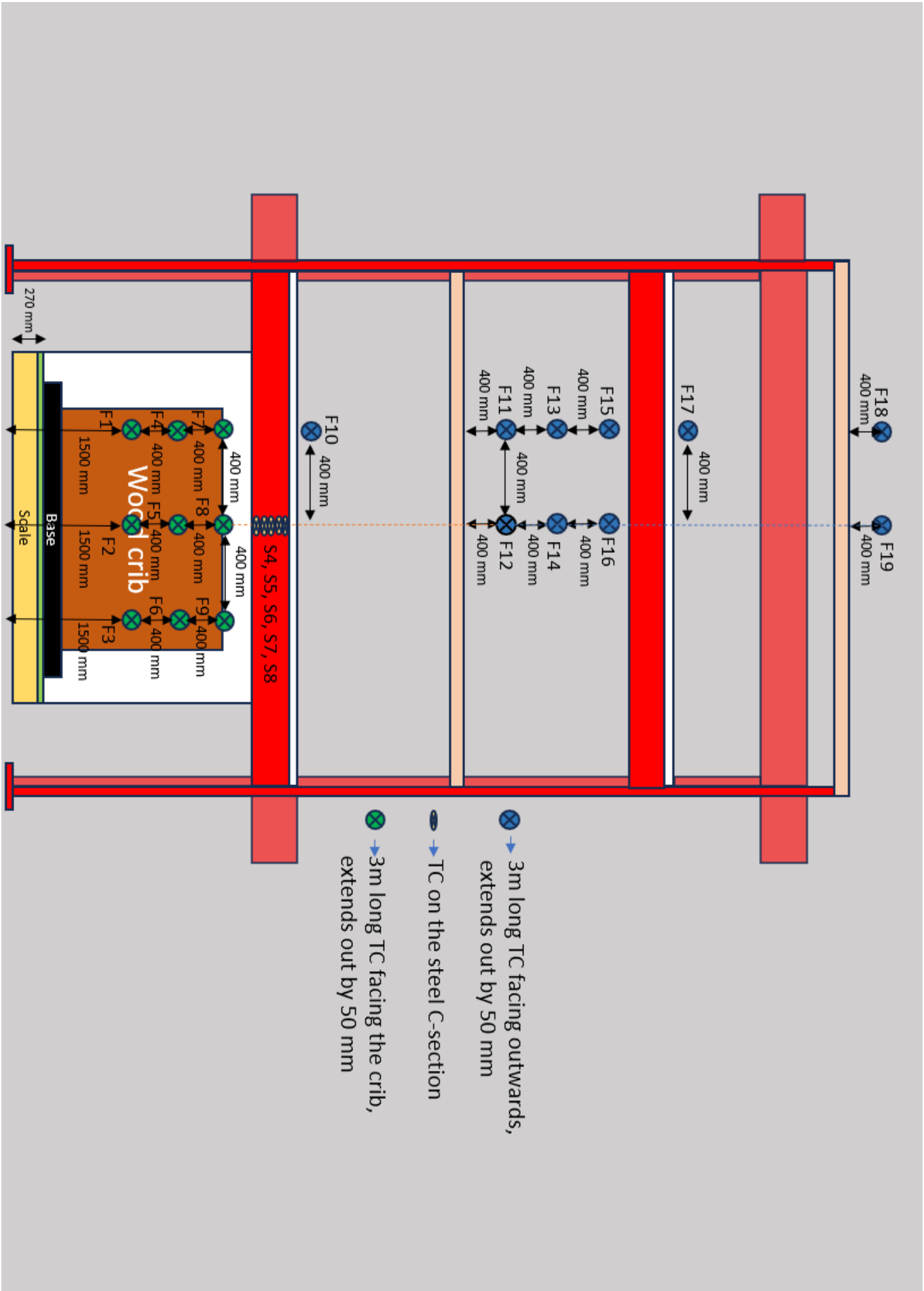
F18
400 mm
F19
400 mm
F17
400 mm
F15
400 mm
F16
400 mm
F13
400 mm
F14
400 mm
F11
400 mm
F12
400 mm
F10
400 mm
S4, S5, S6, S7, S8
400 mm
400 mm
F7
400 mm
F8
400 mm
F9
400 mm
F4
400 mm
F5
400 mm
F6
400 mm
F1
1500 mm
F2
1500 mm
F3
1500 mm
Wood crib
Base
Scale
270 mm
3m long TC facing outwards, extends out by 50 mm
TC on the steel C-section
3m long TC facing the crib, extends out by 50 mm

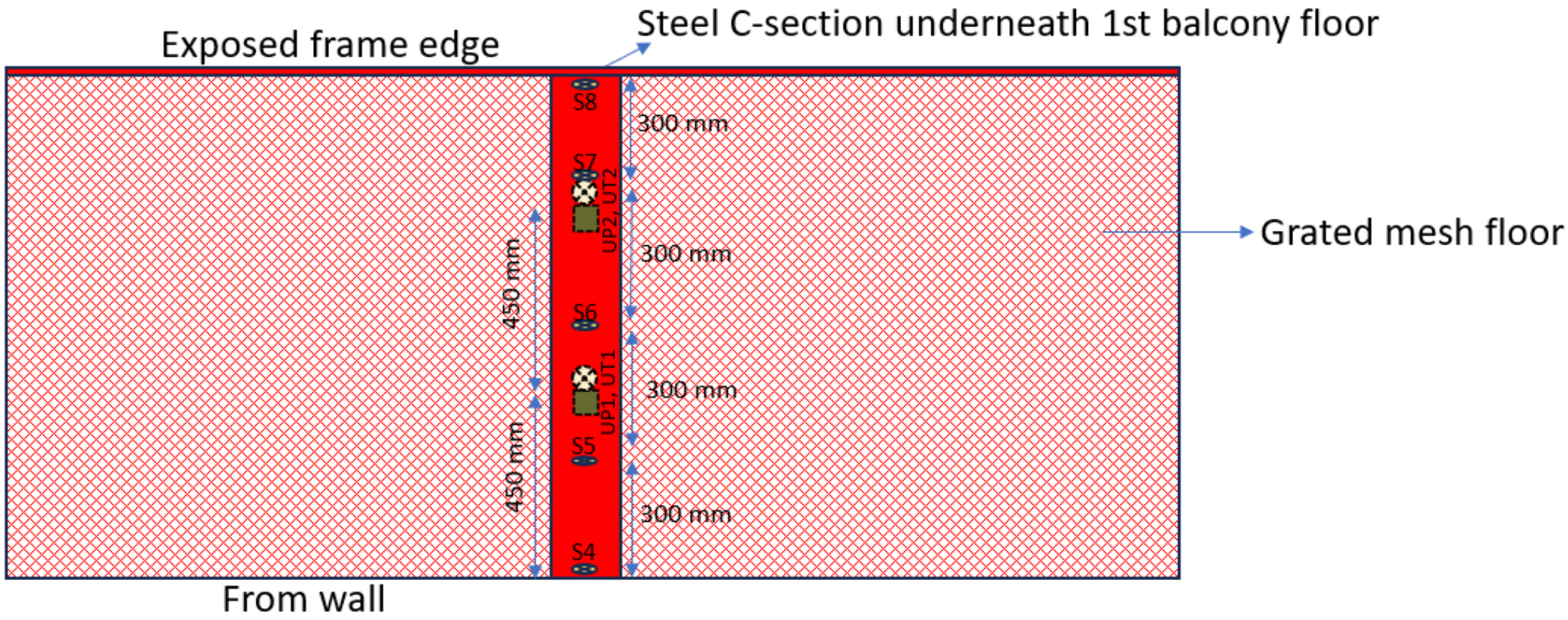

S4 – 10 mm from the wall on Steel C section to measure steel temperature
S5 – 300 mm from the wall on Steel C section to measure steel temperature
S6 – 600 mm from the wall on Steel C section to measure steel temperature
S7 – 900 mm from the wall on Steel C section to measure steel temperature
S8 – 1200 mm from the wall on Steel C section to measure steel temperature

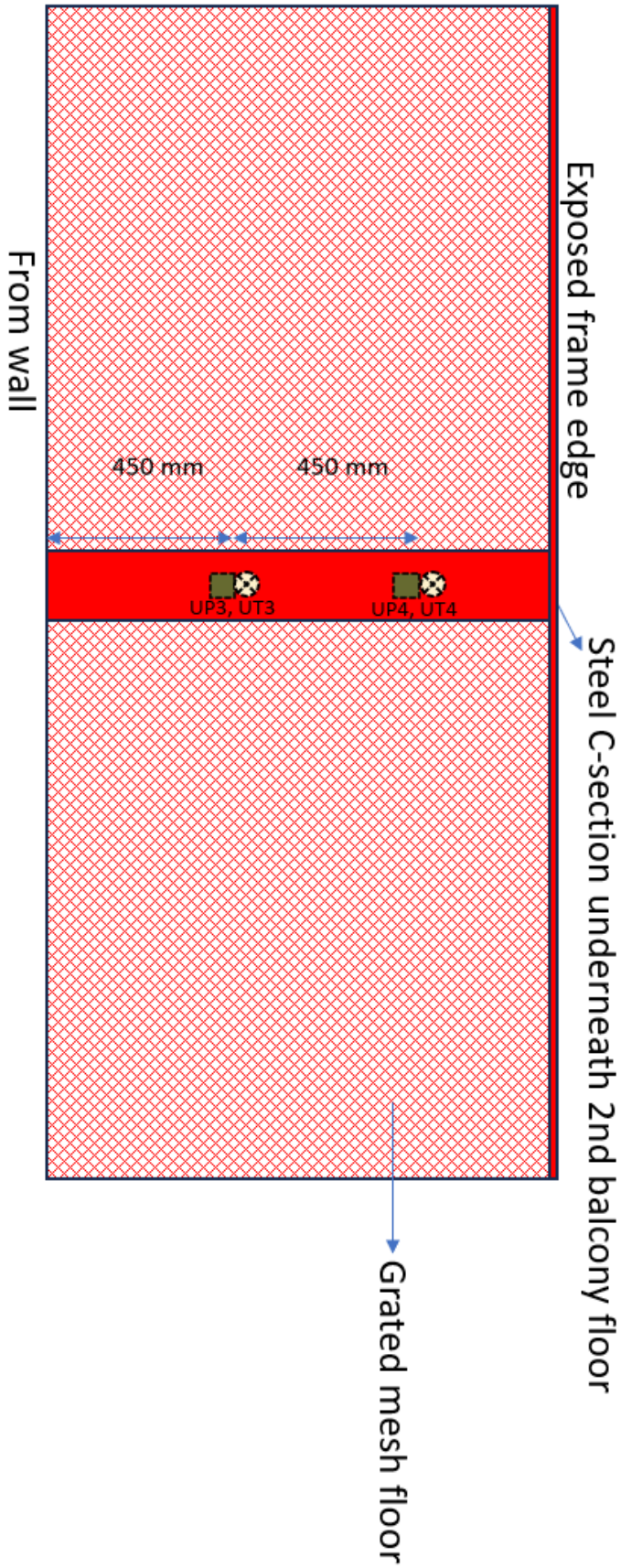
Exposed frame edge
Steel C-section underneath 2nd balcony floor
Grated mesh floor
From wall
450 mm
450 mm
UP3, UT3
UP4, UT4

Figure 1: Elevation view of the system before test.

Figure 2: The front facing Fluxmeter, Plate TC's and Inconels (placed 1m away from the crib).

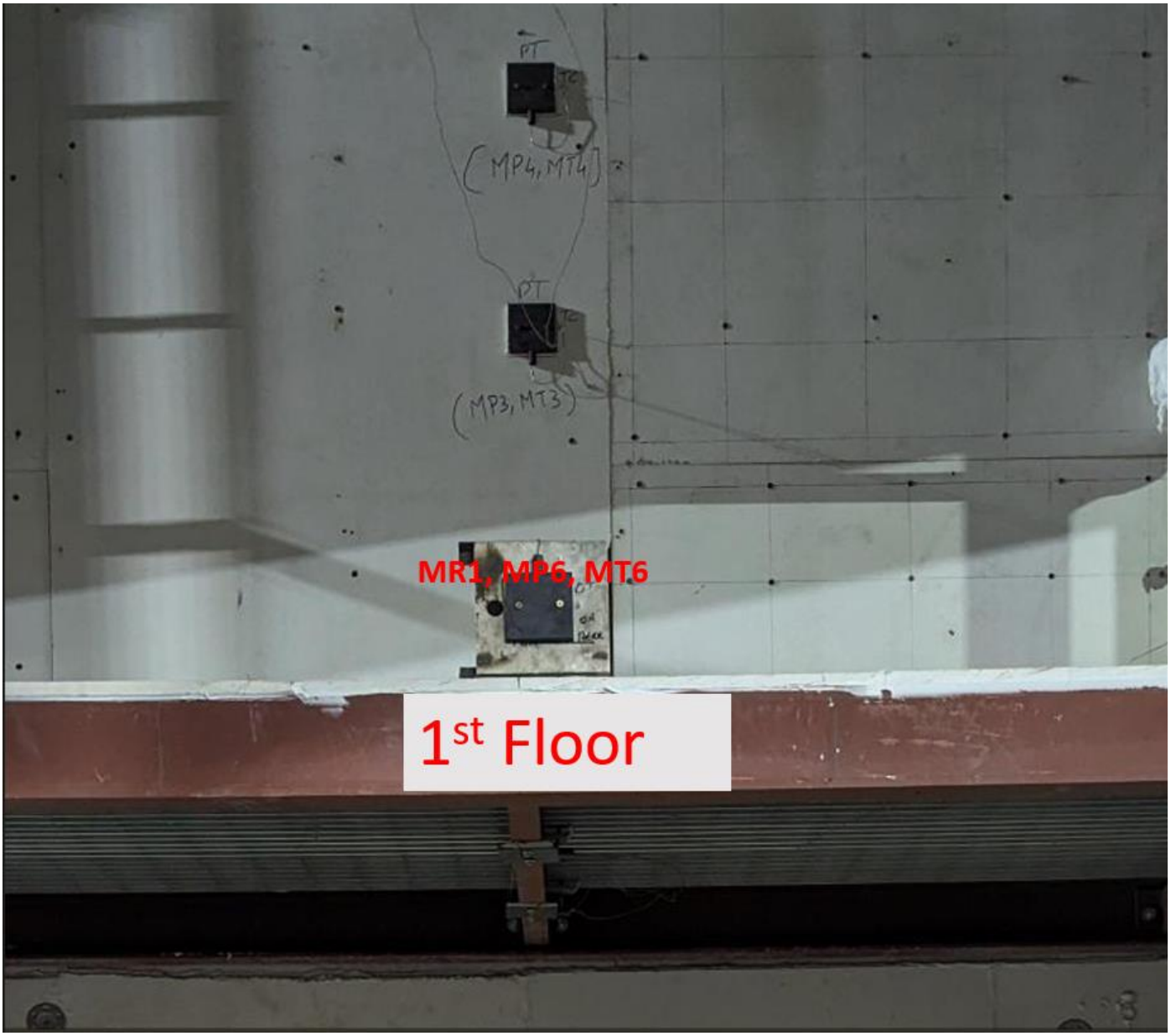

Figure 3: Representation of instrumentation on 1st floor

2. DATA RESULTS

Heat Release rate (Hood)

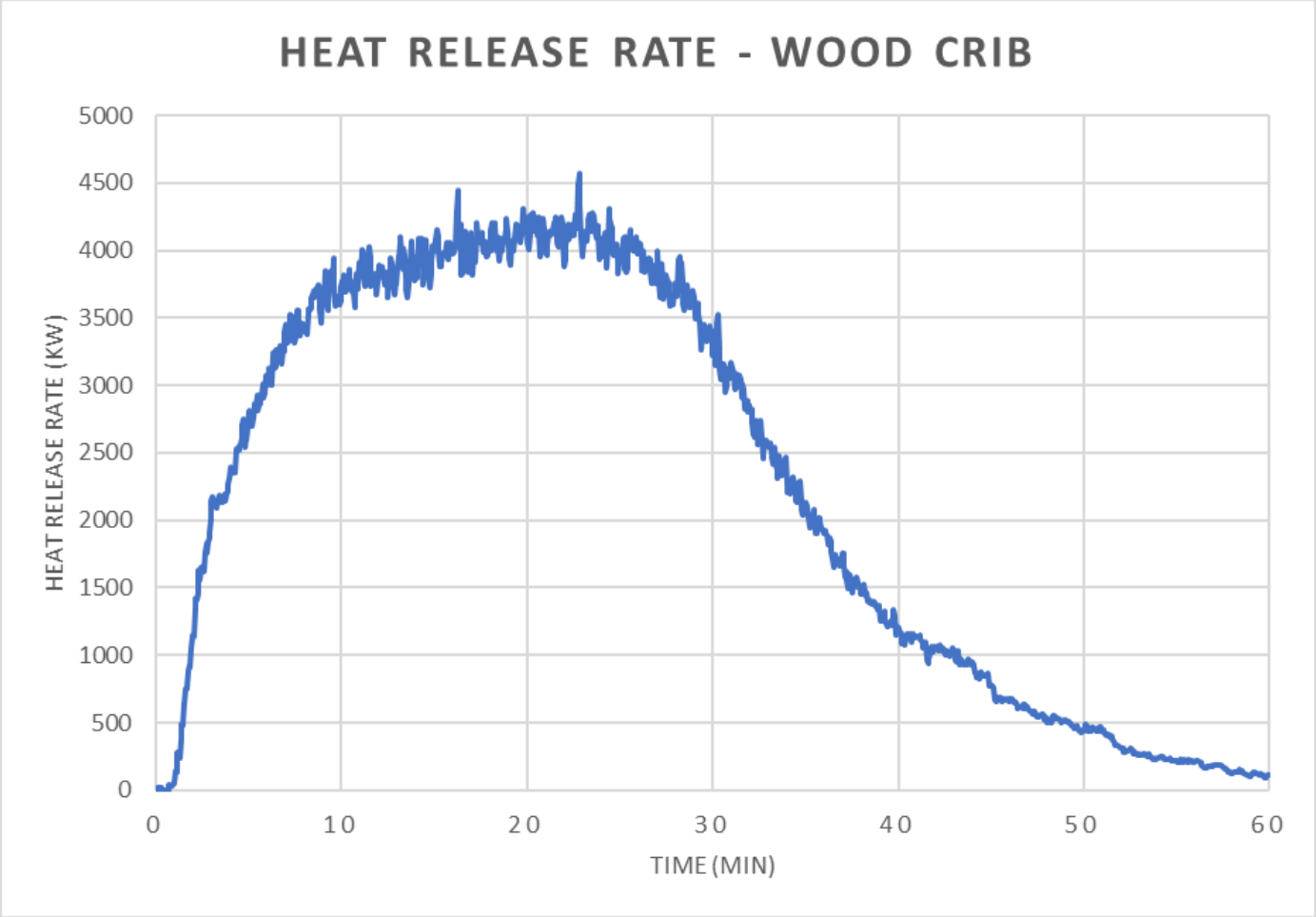

Mass loss

Radiant heat at 1m from crib

The radiant heat was measured using a Heat flux meter of range 100 kW/m²:

The heat flux meter was located at 1000 mm from the wood crib at mid-height of the wood crib.

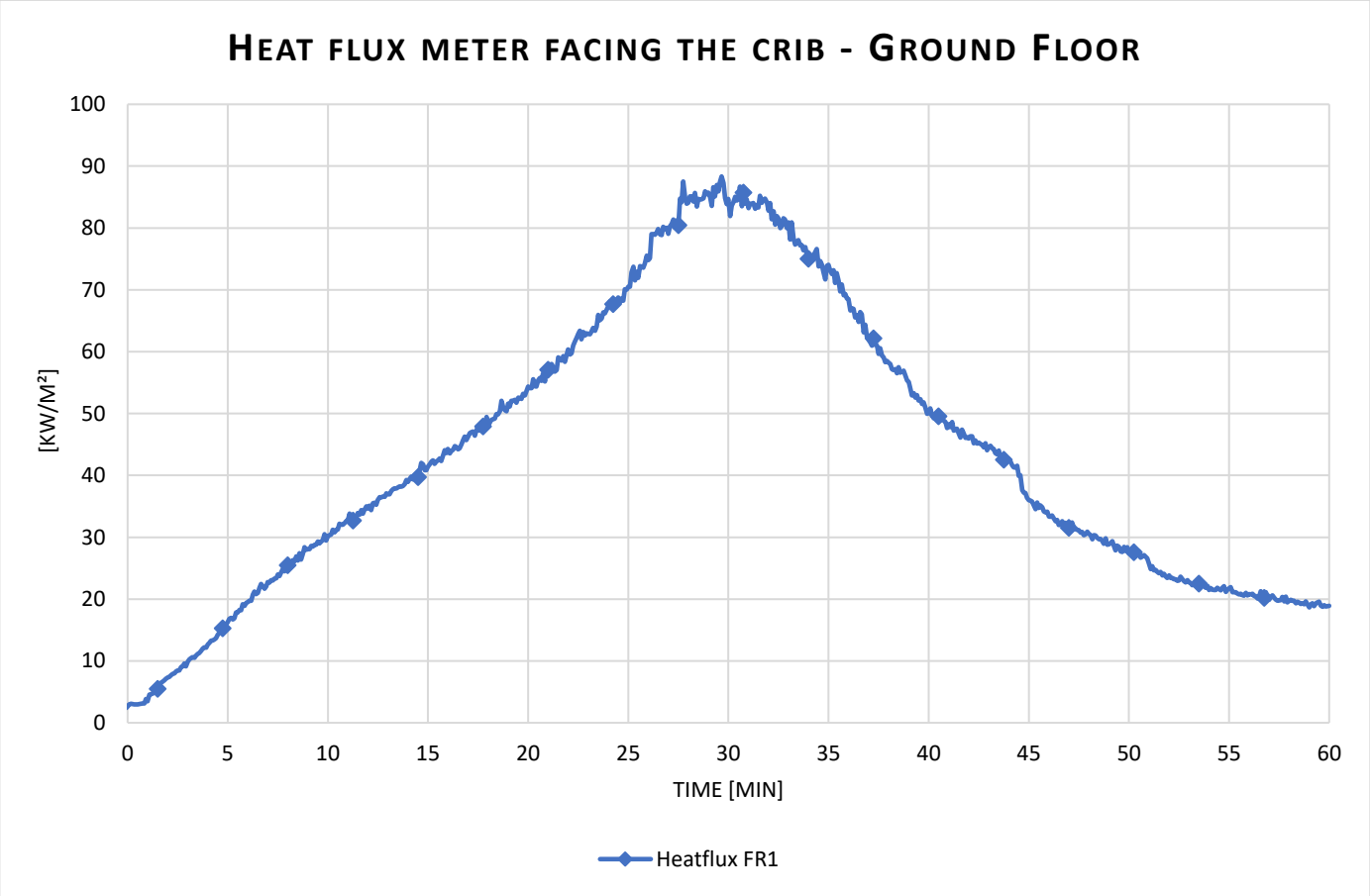

Temperature measured by plate TC's at 1m away from crib

Inconel thermocouples were placed 1m from the crib at mid height spaced by 500 mm from the centre point of the crib. The installation included 3x Inconel thermocouple and 3x plate thermocouples.

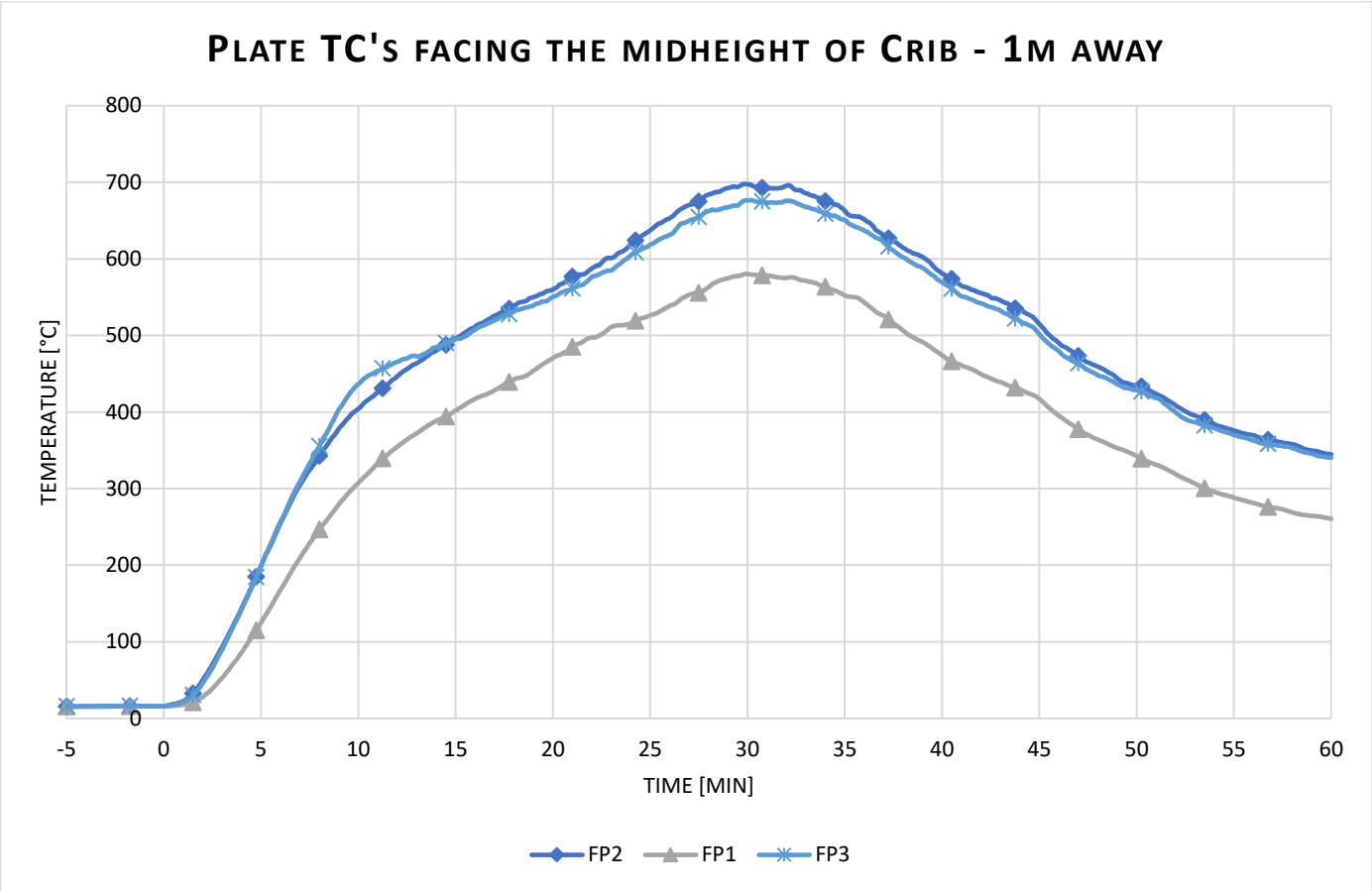

Temperature measured by Inconels at 1m away from crib

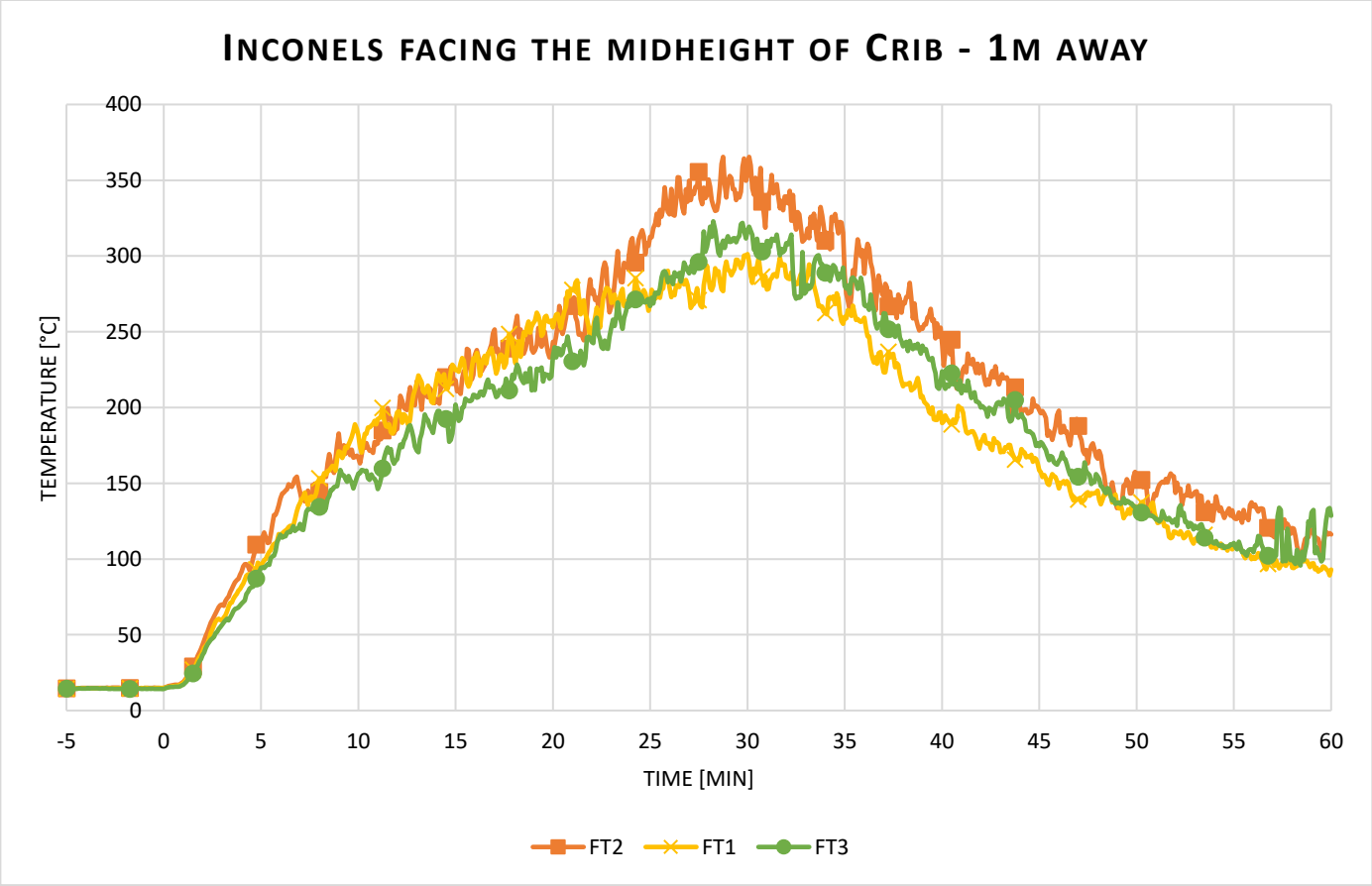

Radiant heat calculated from Plate TC

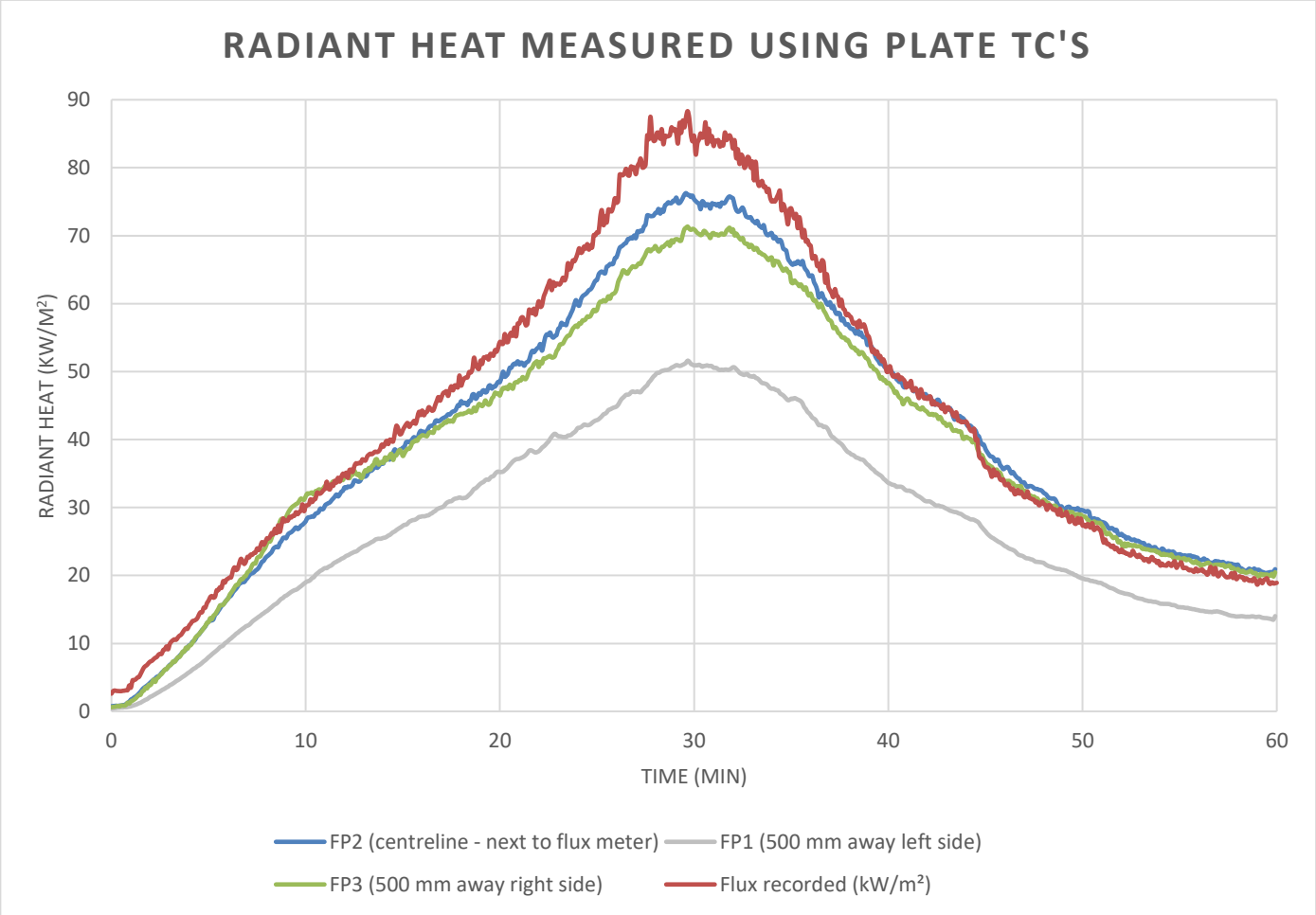

Radiant heat from the flux meter on side wall

The radiant heat was measured using a Heat flux meter of range 100 kW/m²:

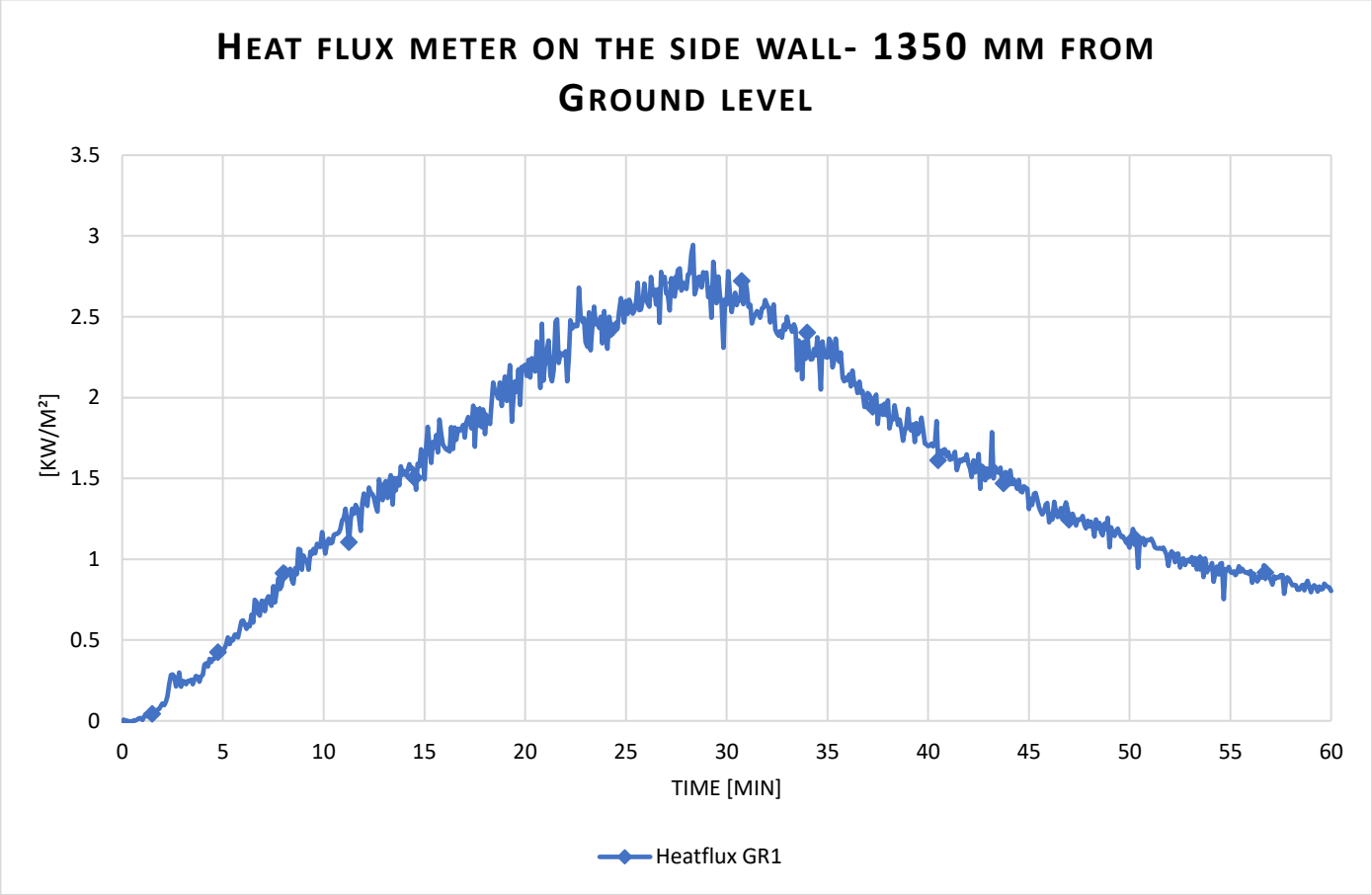

Temperature measured using plate TC's

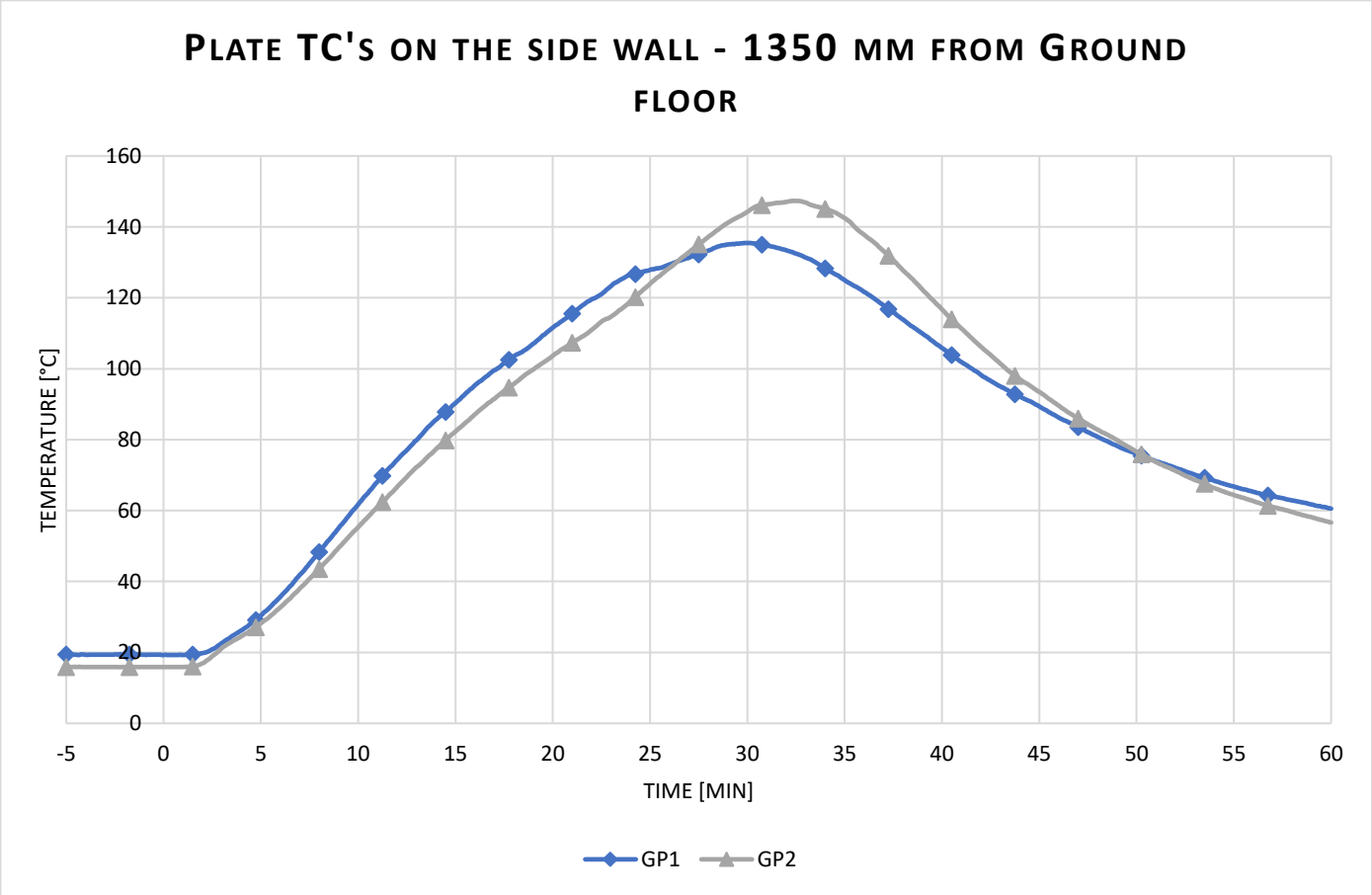

Temperature measured using Inconels

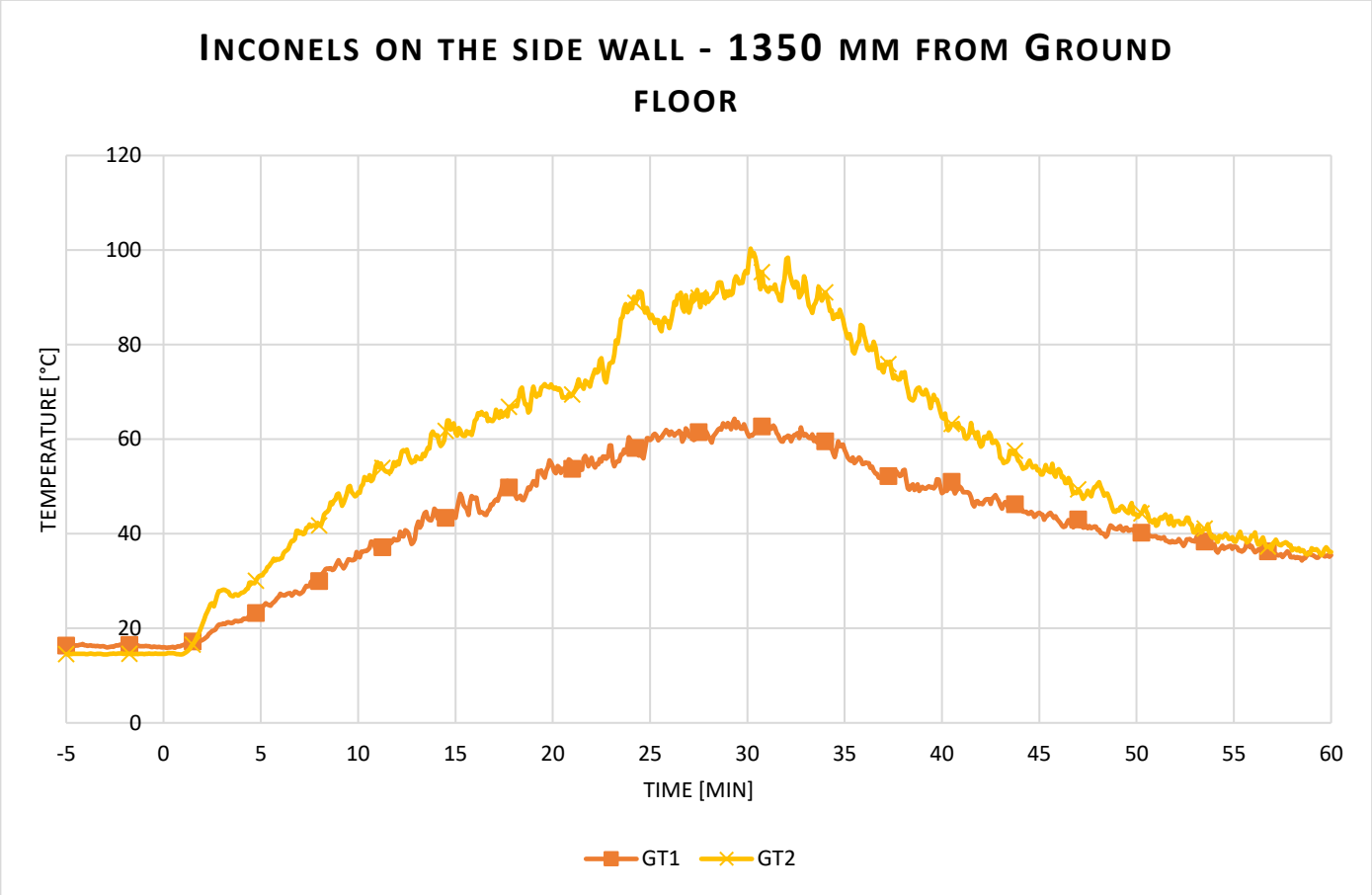

Radiant heat calculated from Plate TC

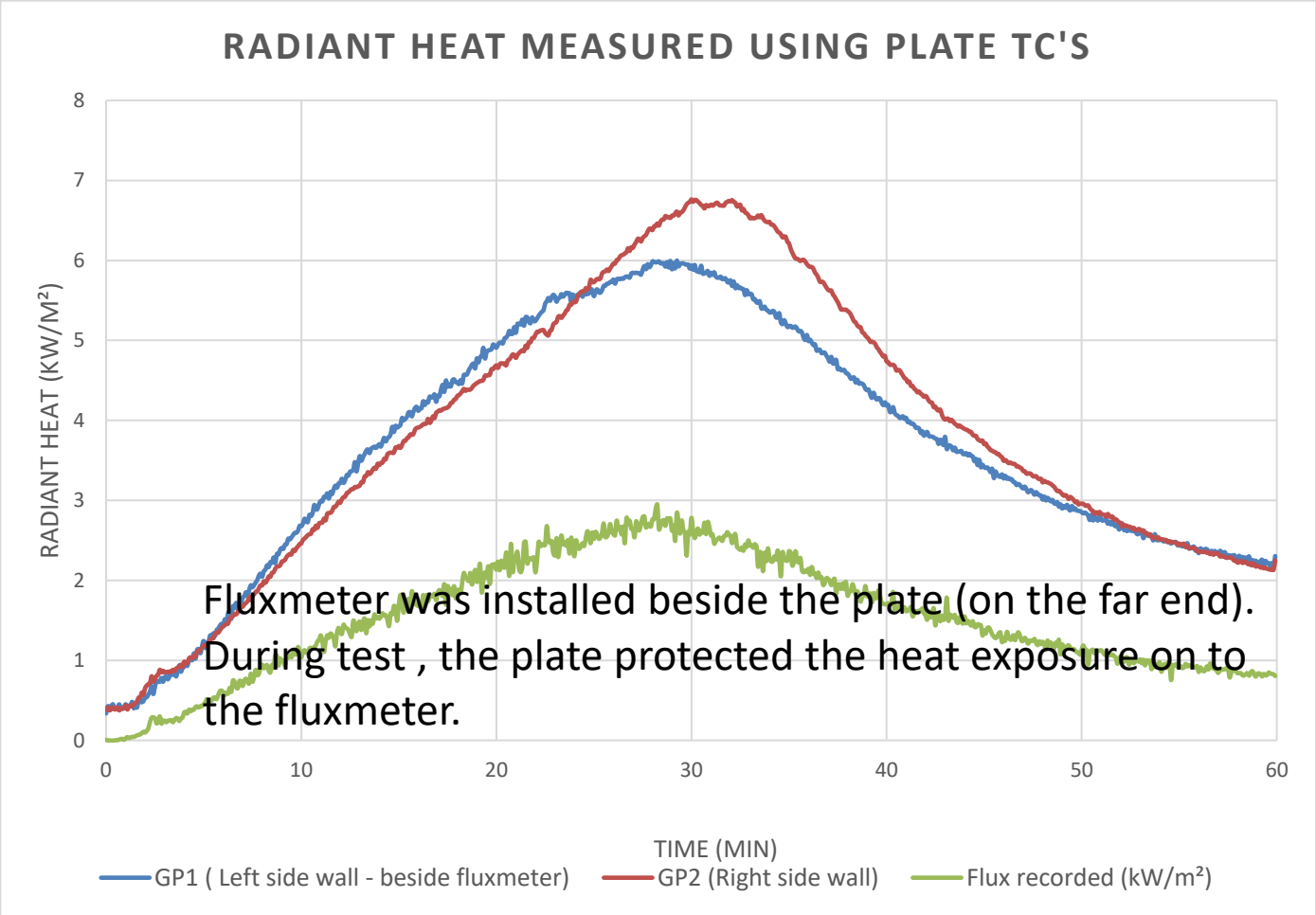

Fluxmeter was installed beside the plate (on the far end). During test , the plate protected the heat exposure on to the fluxmeter.

Temperature measured from the Plate TC's on wall at 1st floor

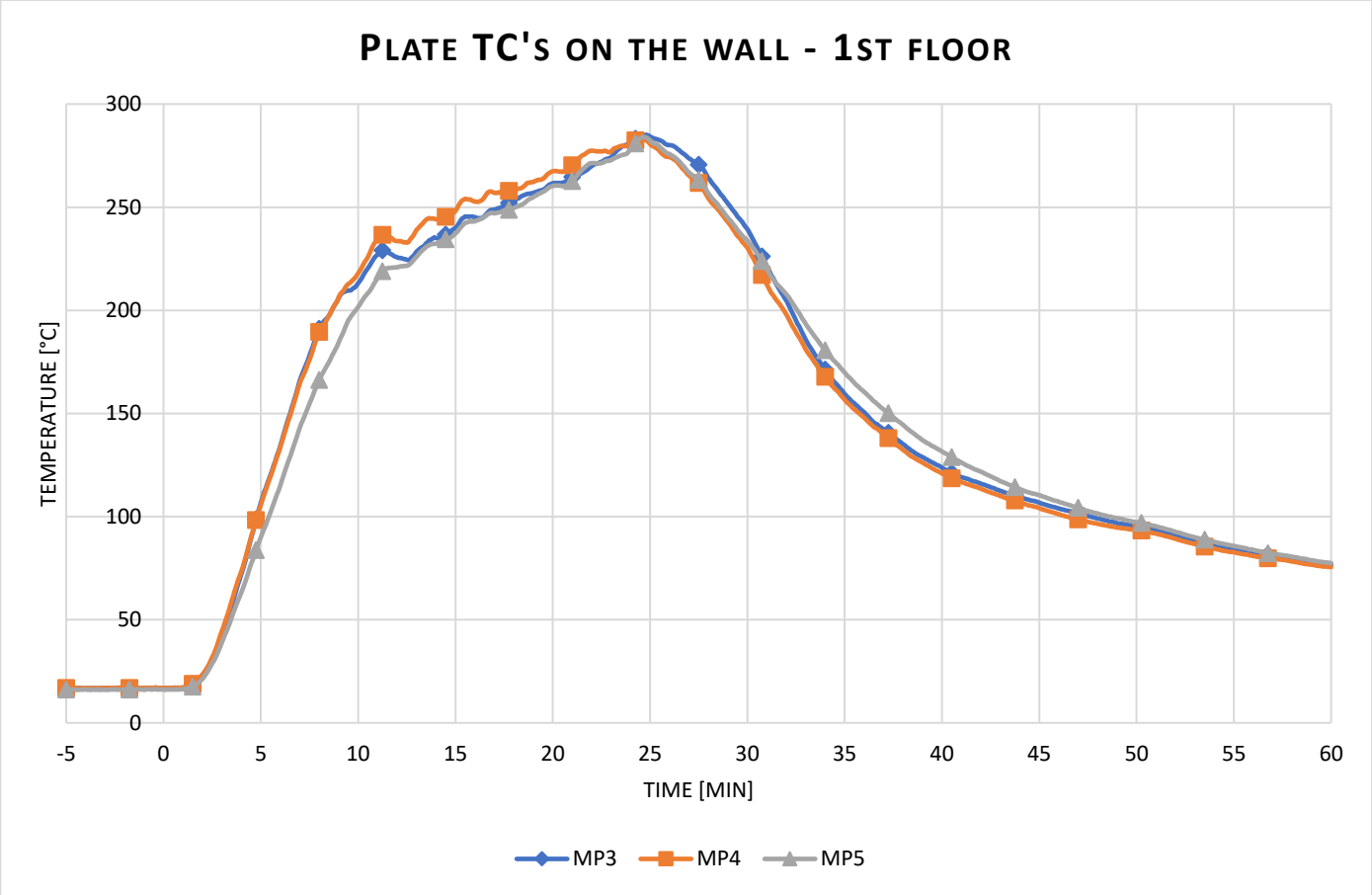

Temperature measured from the Inconels on wall at 1st floor

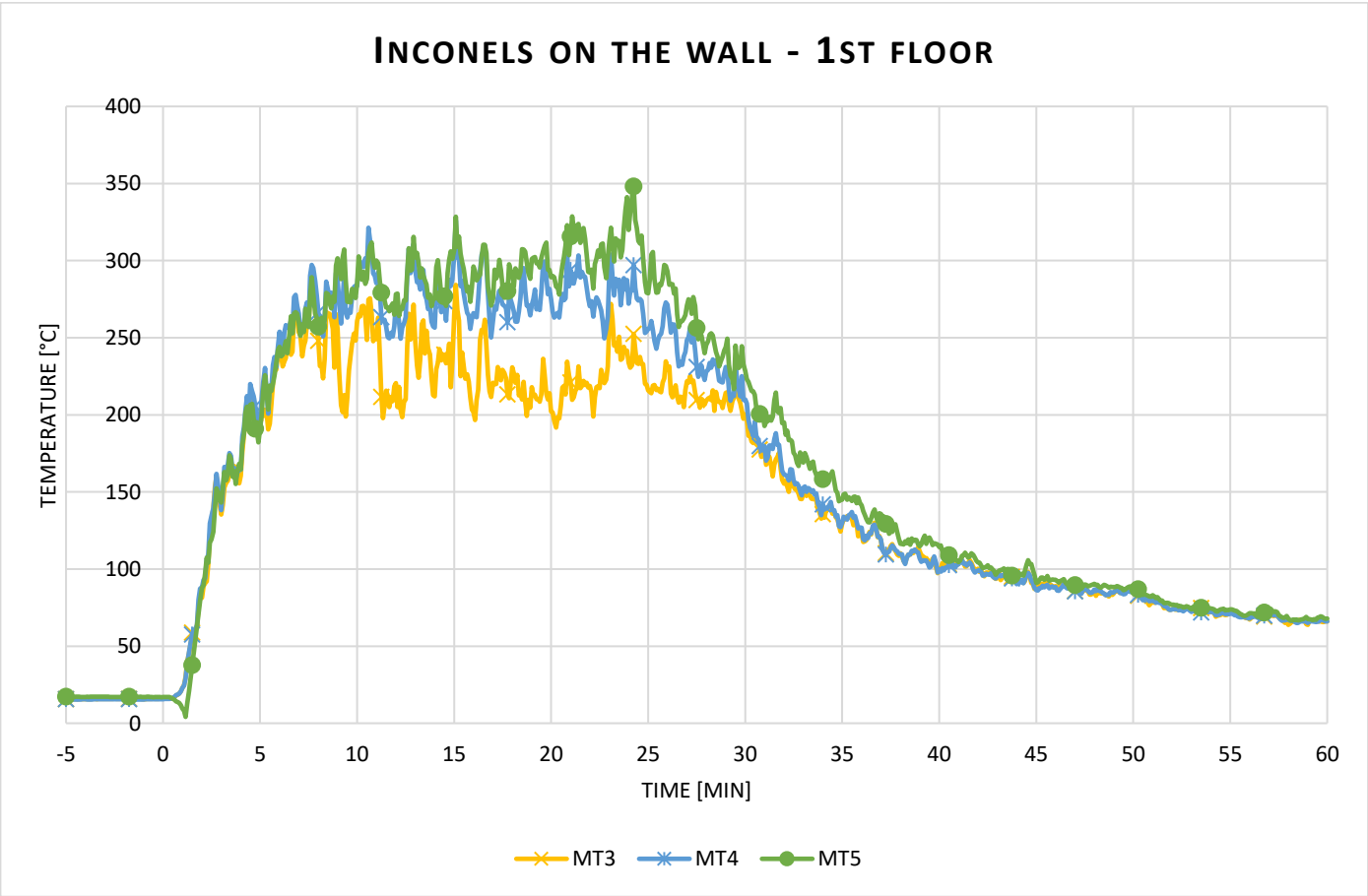

Radiant heat calculated from Plate TC

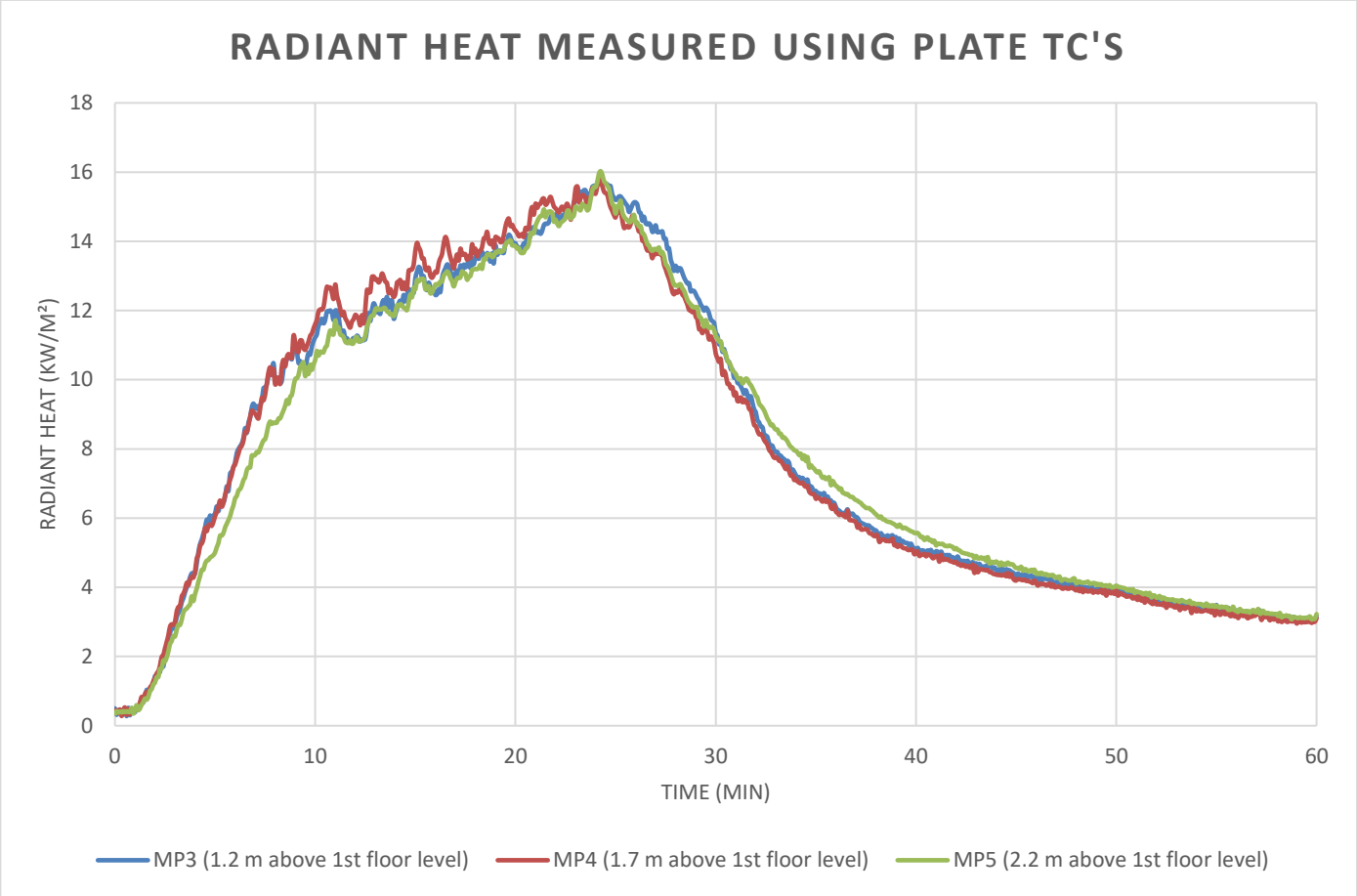

Temperature measured from Plate TC on the wall at 2nd floor

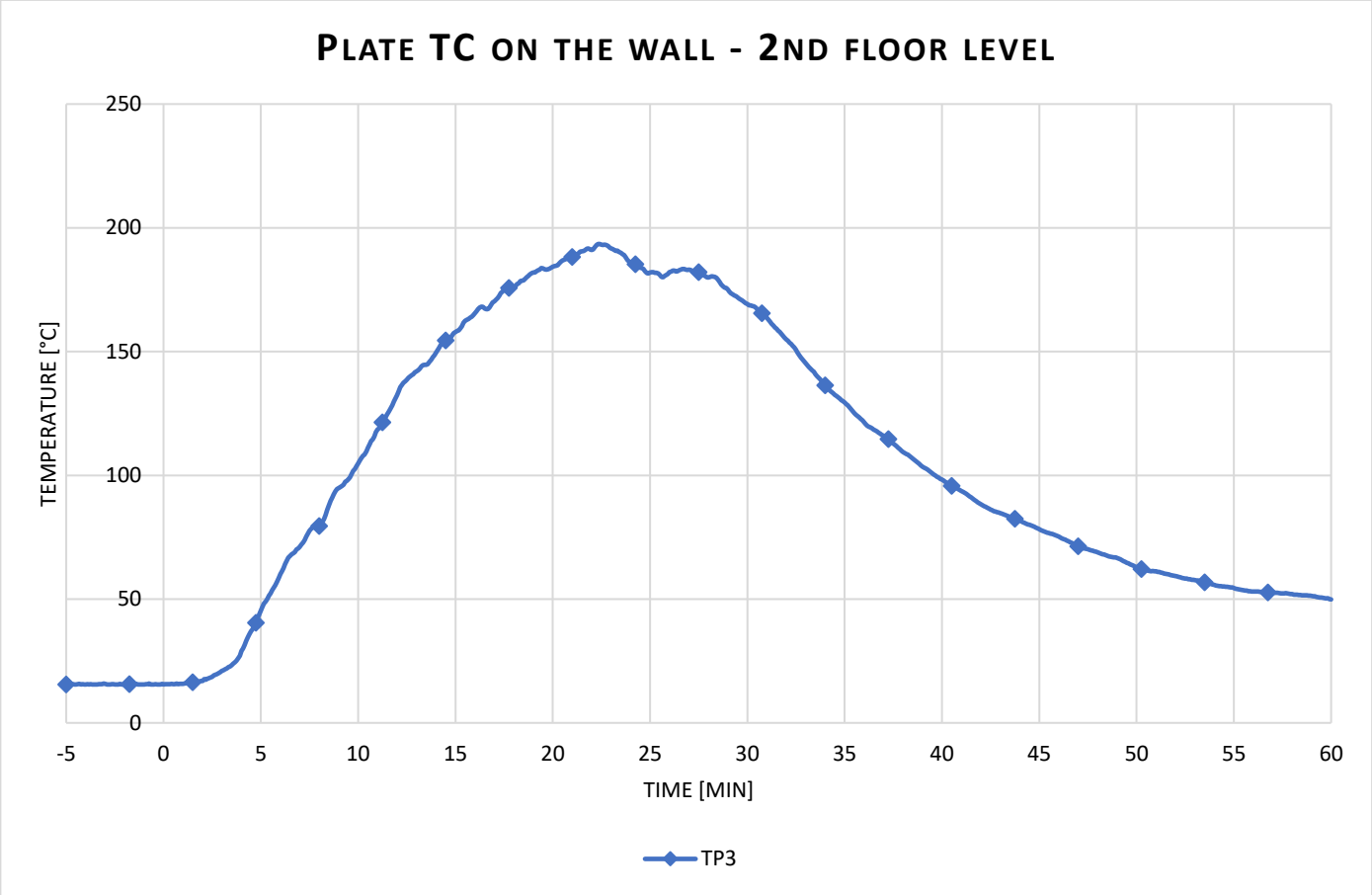

Temperature measured from Inconel on the wall at 2nd floor

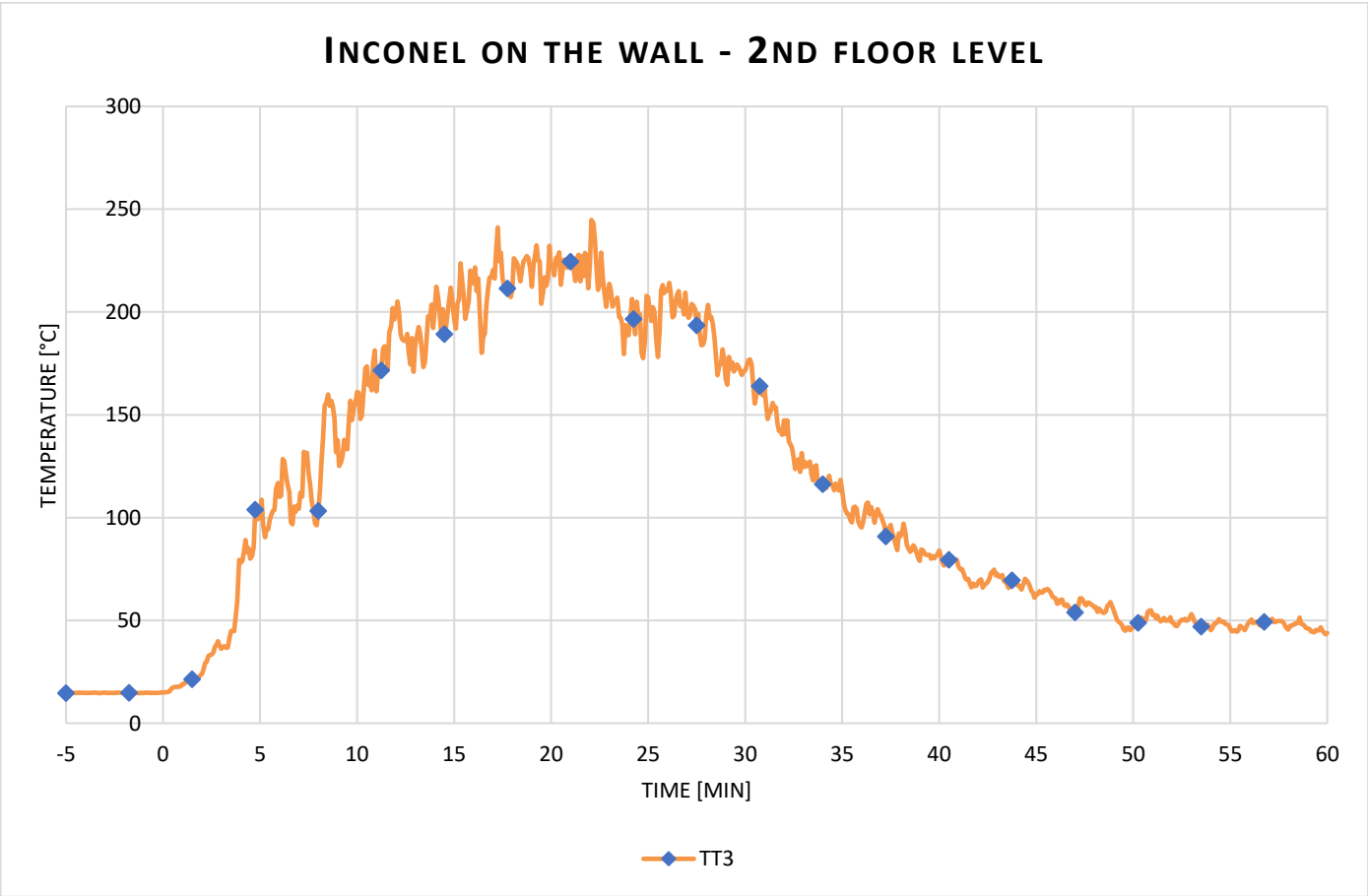

Radiant heat calculated from Plate TC

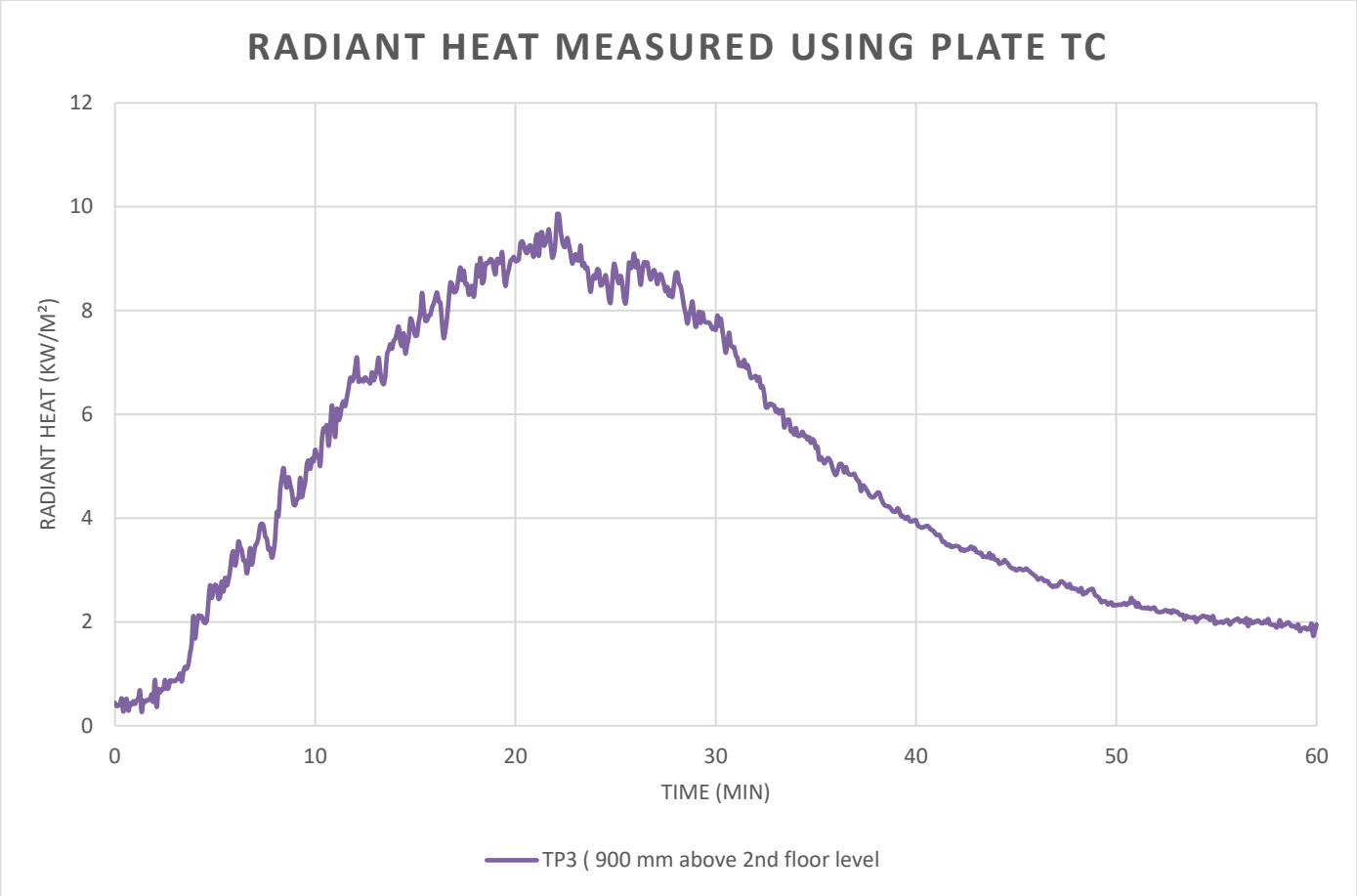

Radiant heat from the flux meter on 1st floor exposed edge

The radiant heat was measured using a Heat flux meter of range 200 kW/m².

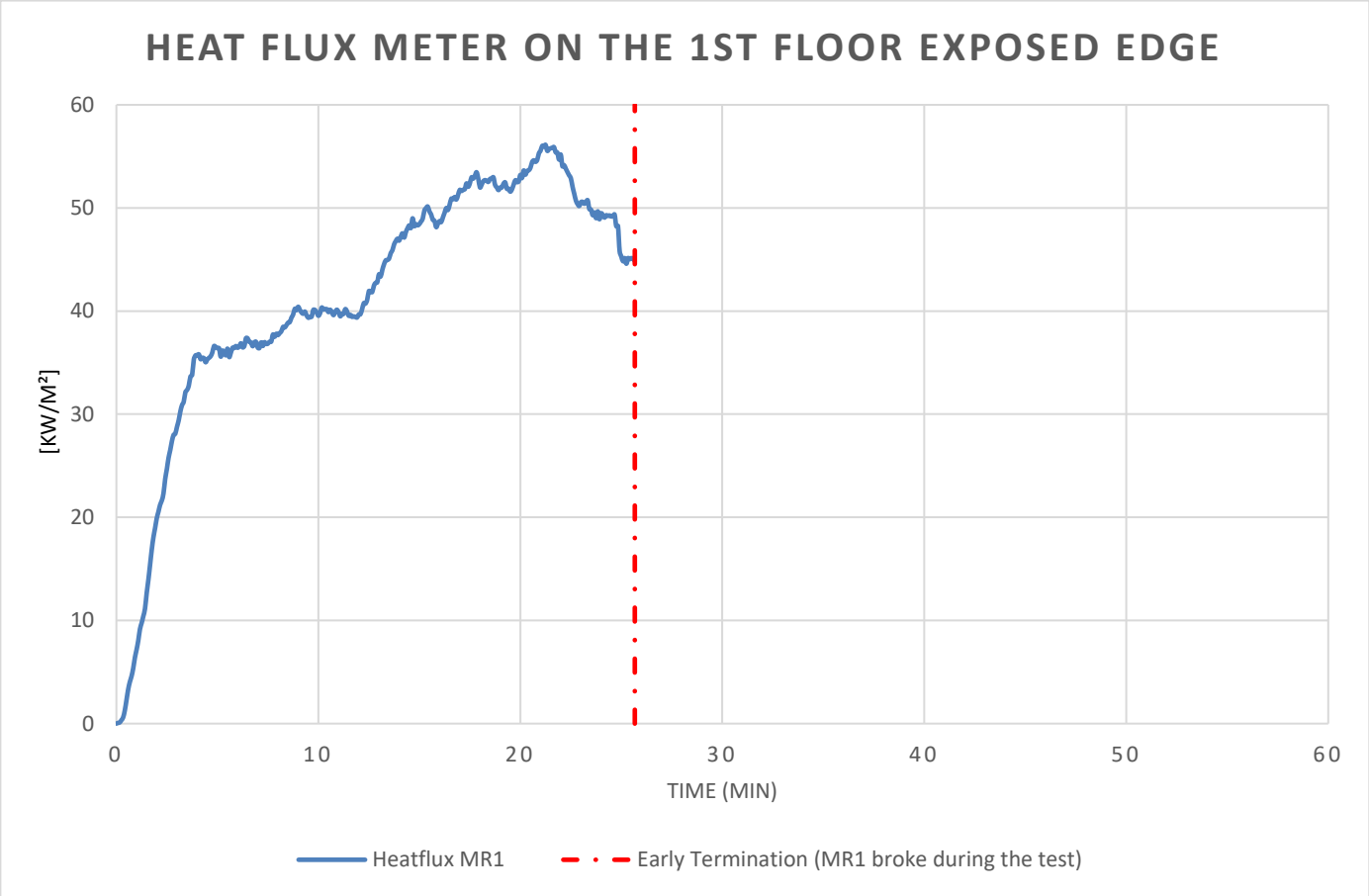

Temperature measured using plate TC 1st floor exposed edge

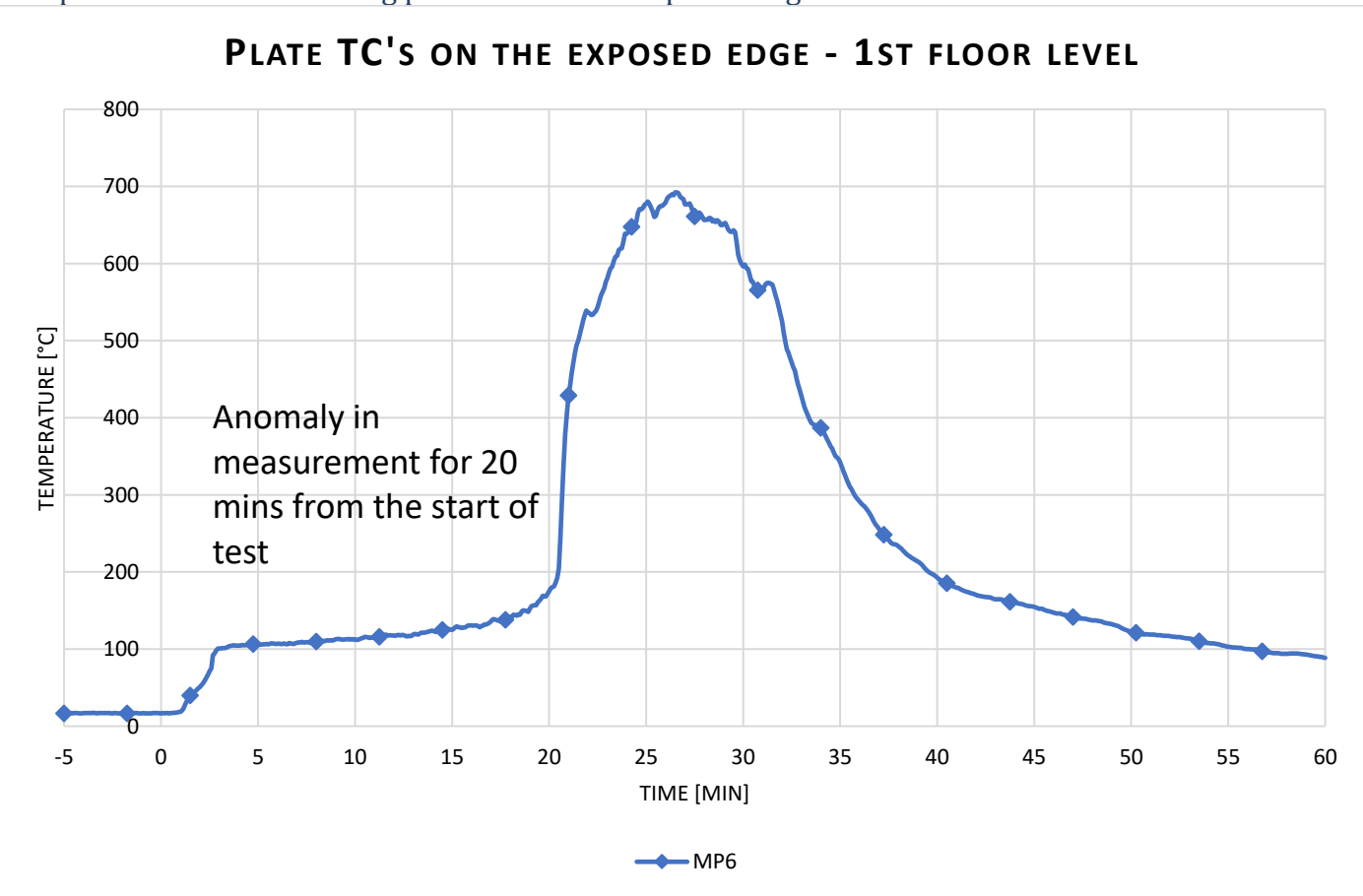

Temperature measured using plate Inconel 1st floor exposed edge

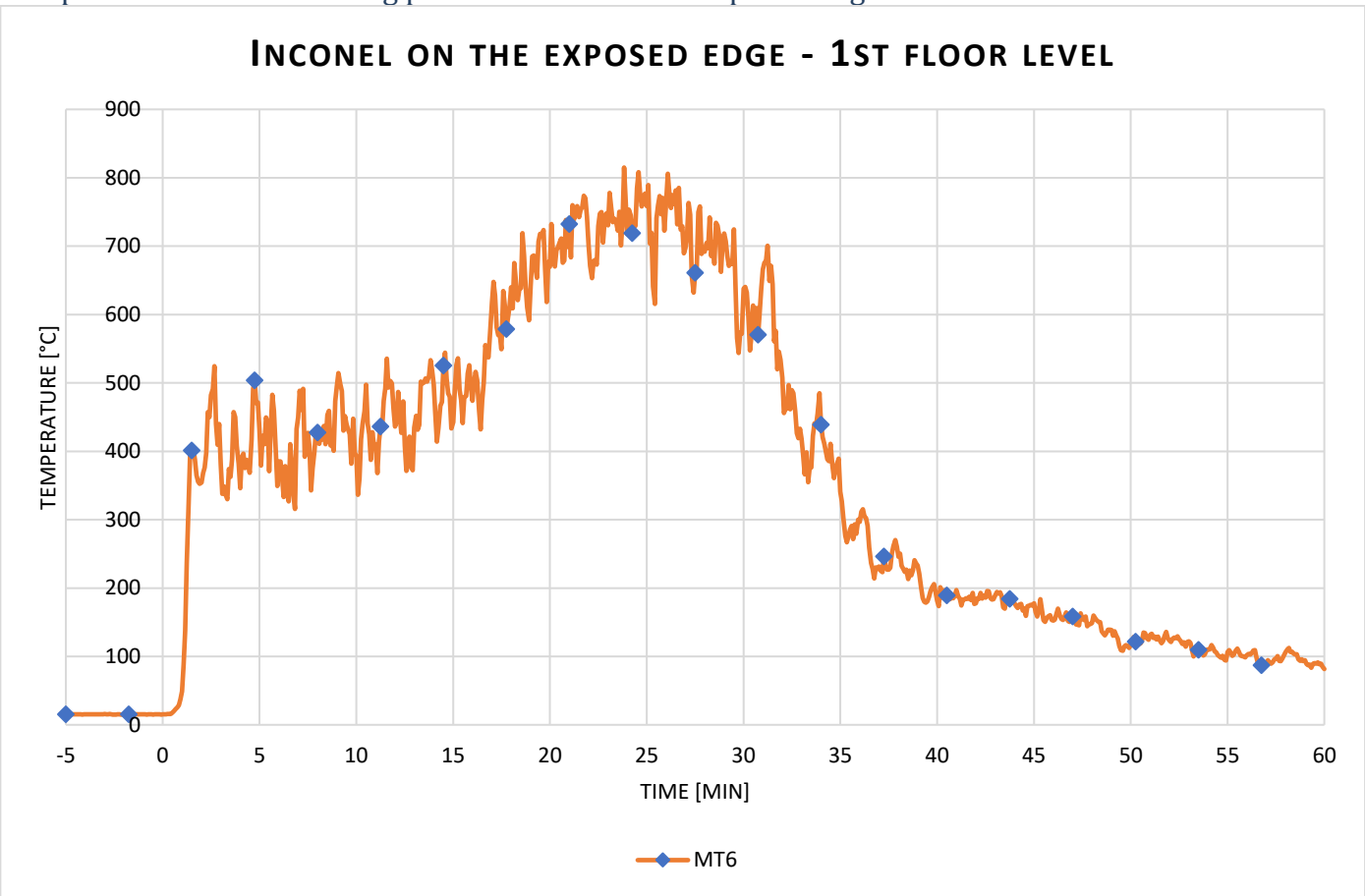

Radiant heat calculated from Plate TC

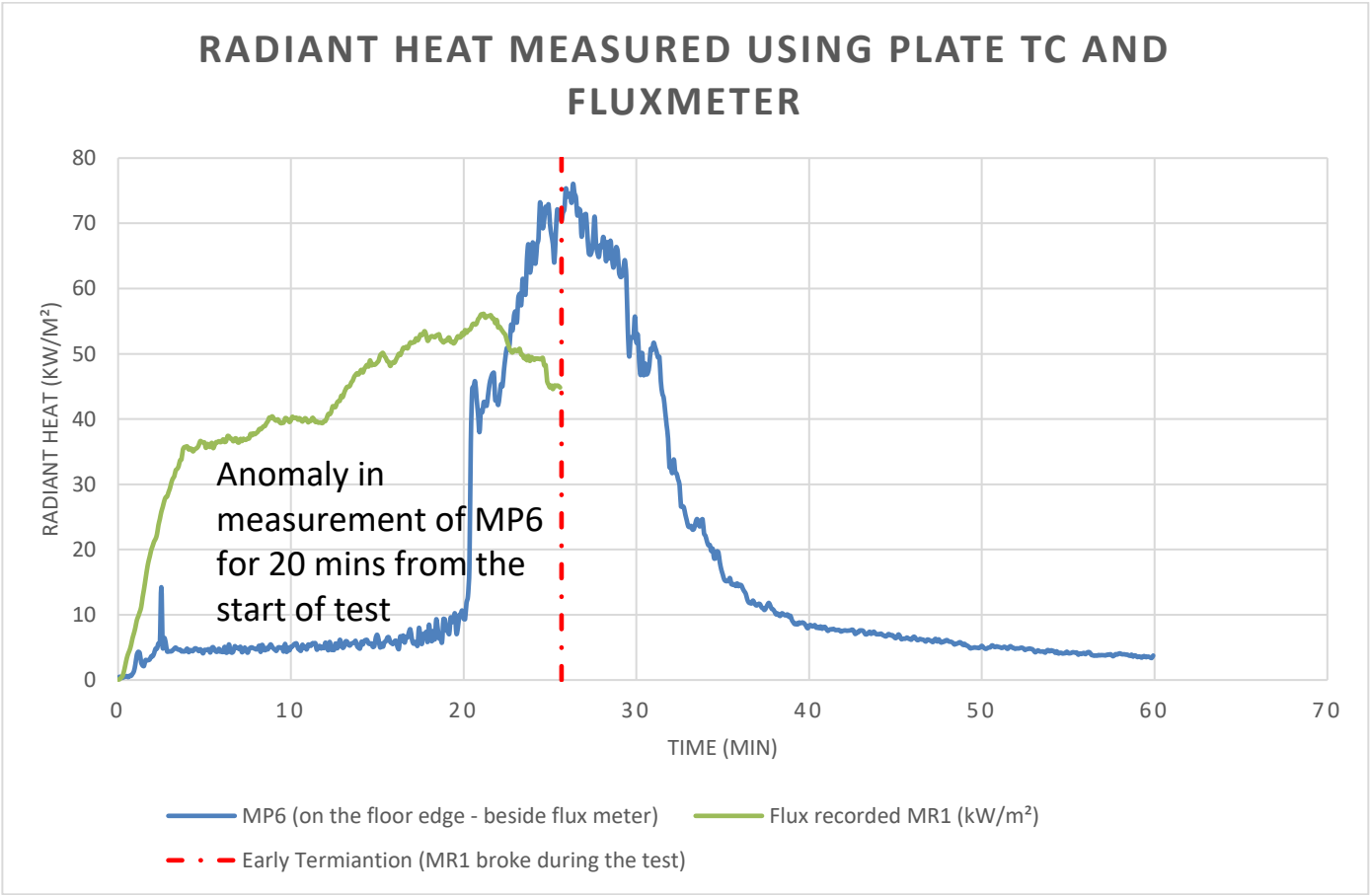

Temperature measured from the Plate TC on exposed edge at 2nd floor

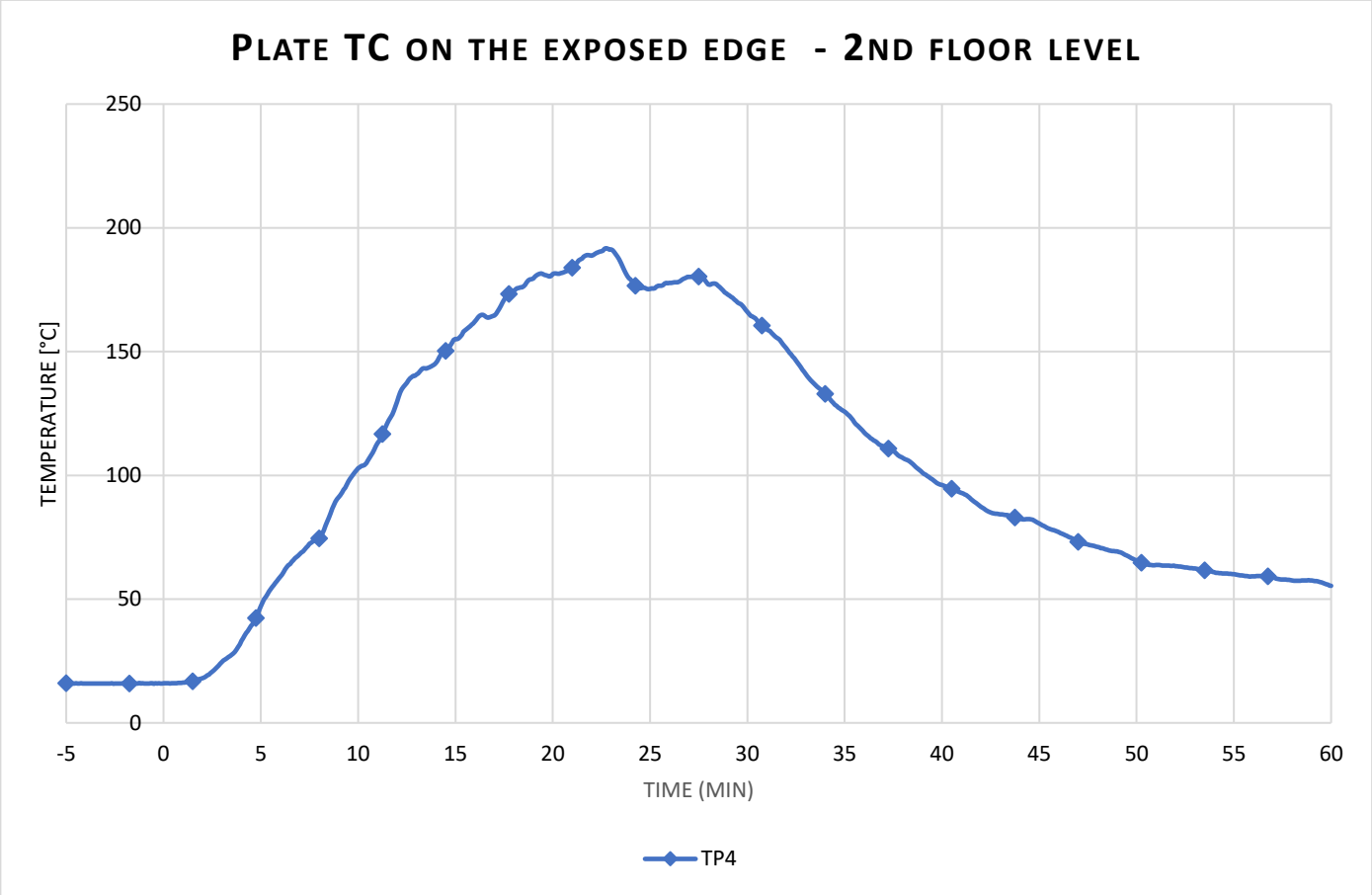

Temperature measured from the Inconel on exposed edge at 2nd floor

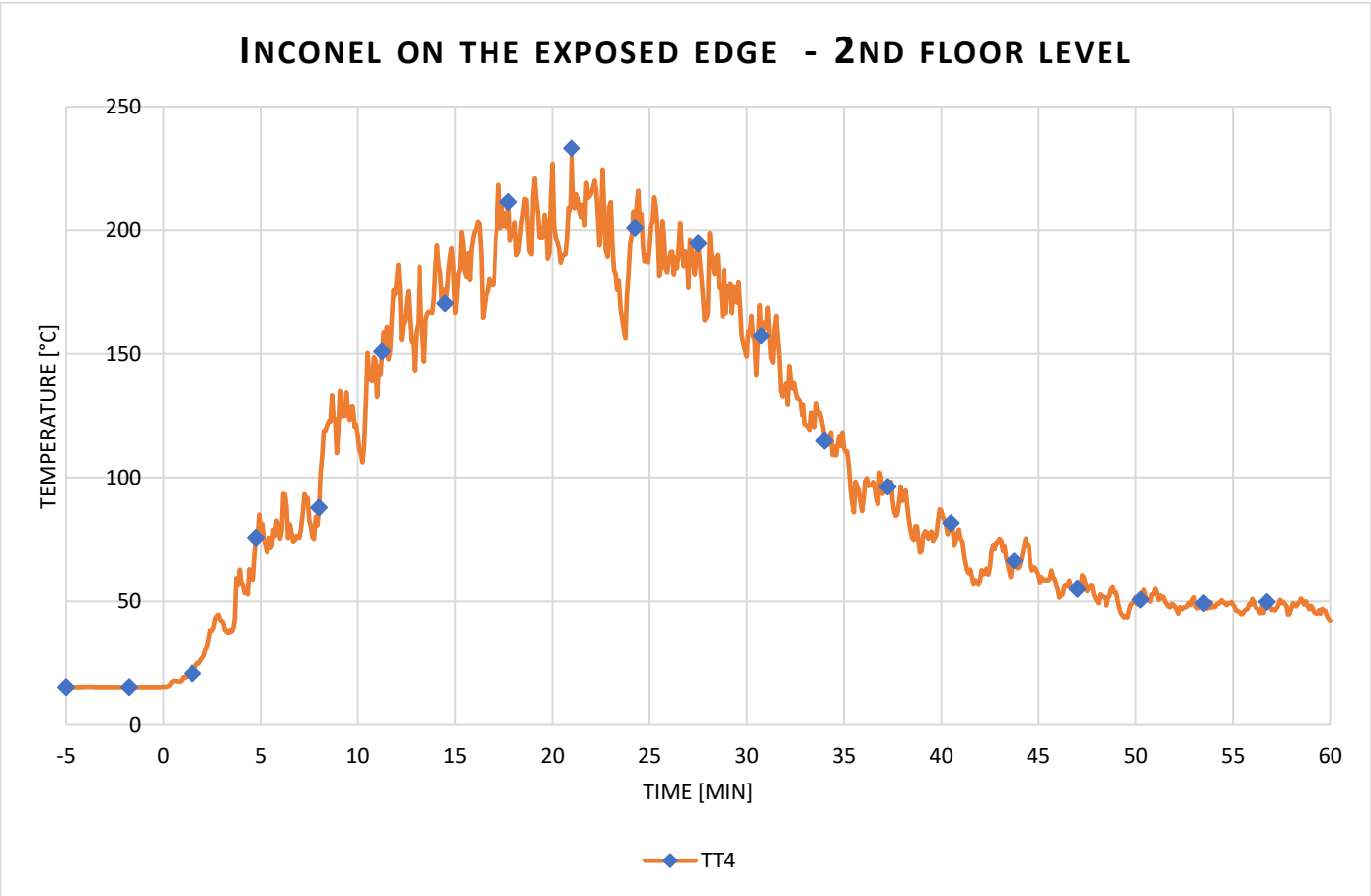

Radiant heat calculated from Plate TC

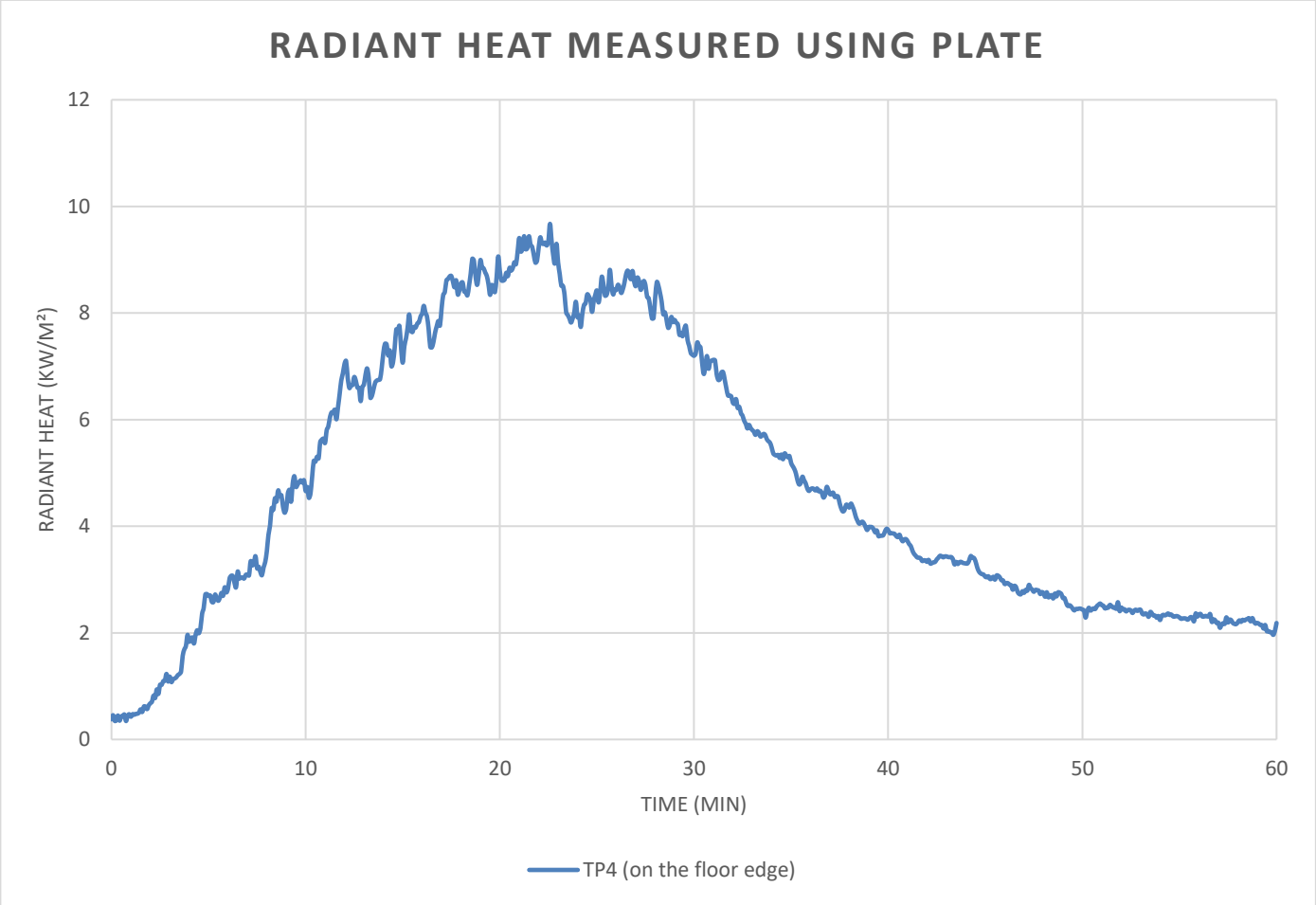

Temperature measured from the Plate TC on 1st floor handrails

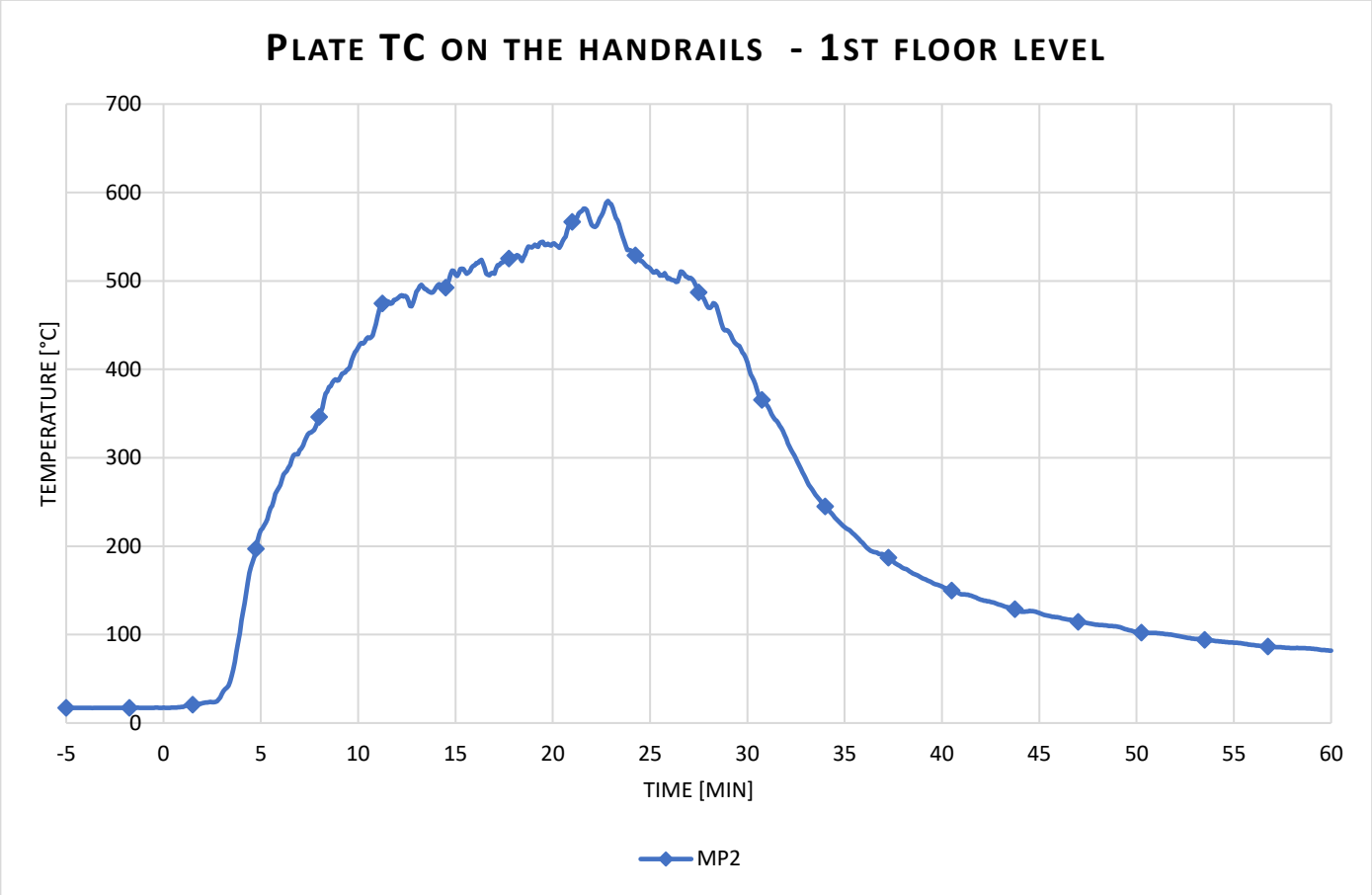

Temperature measured from the Inconel on 1st floor handrails

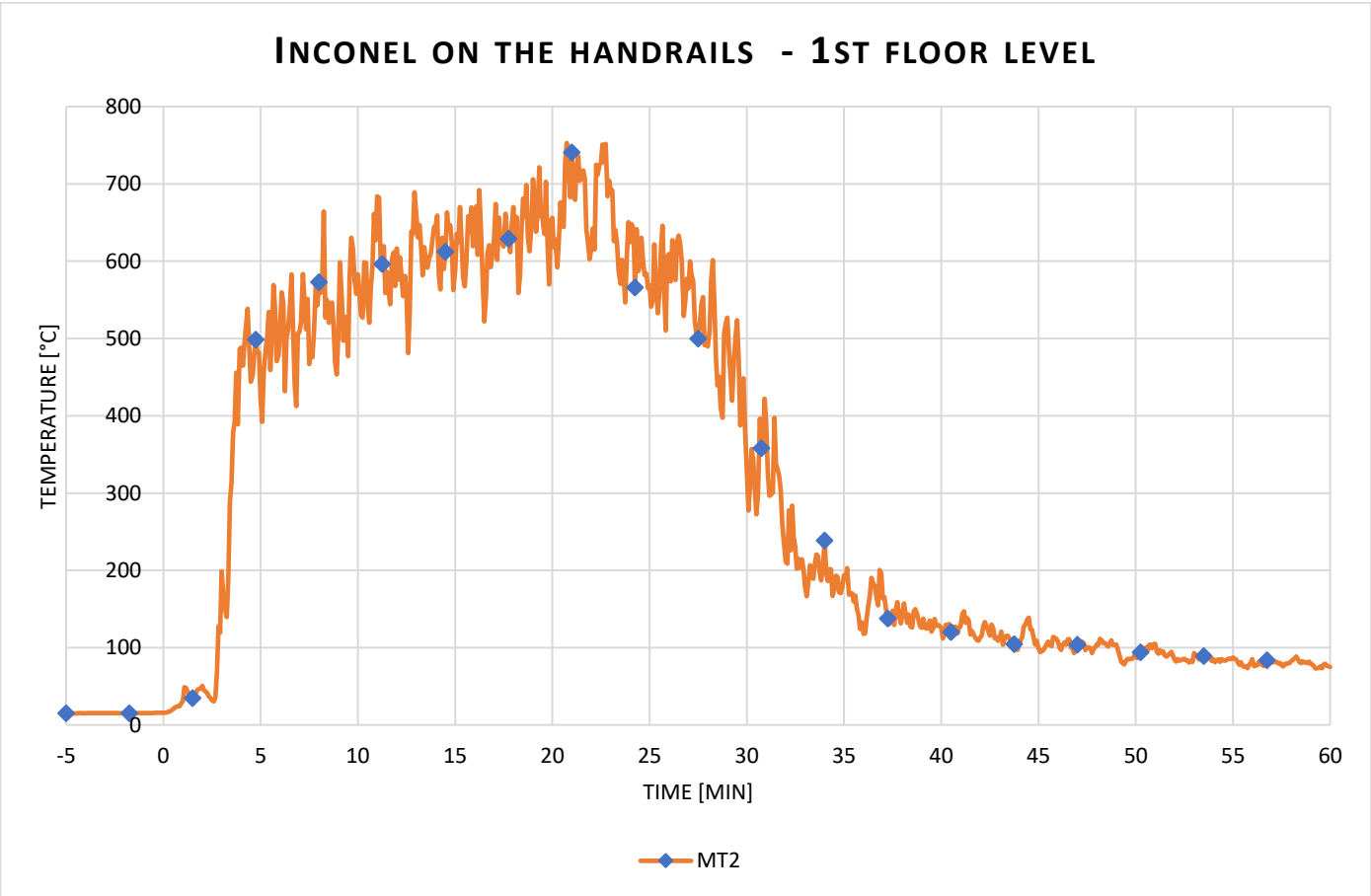

Radiant heat calculated from Plate TC

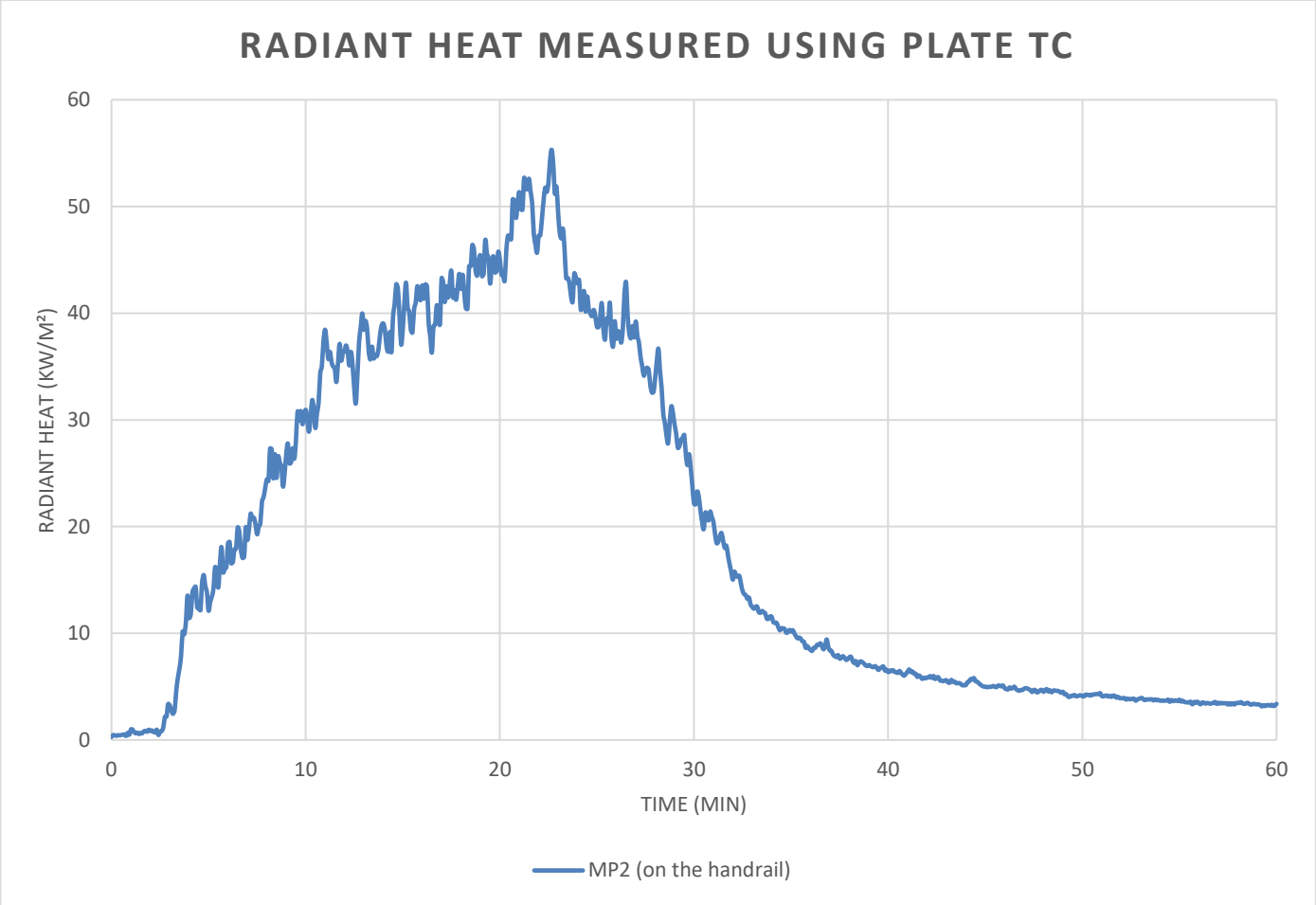

Temperature measured from the Plate TC on 2nd floor handrails

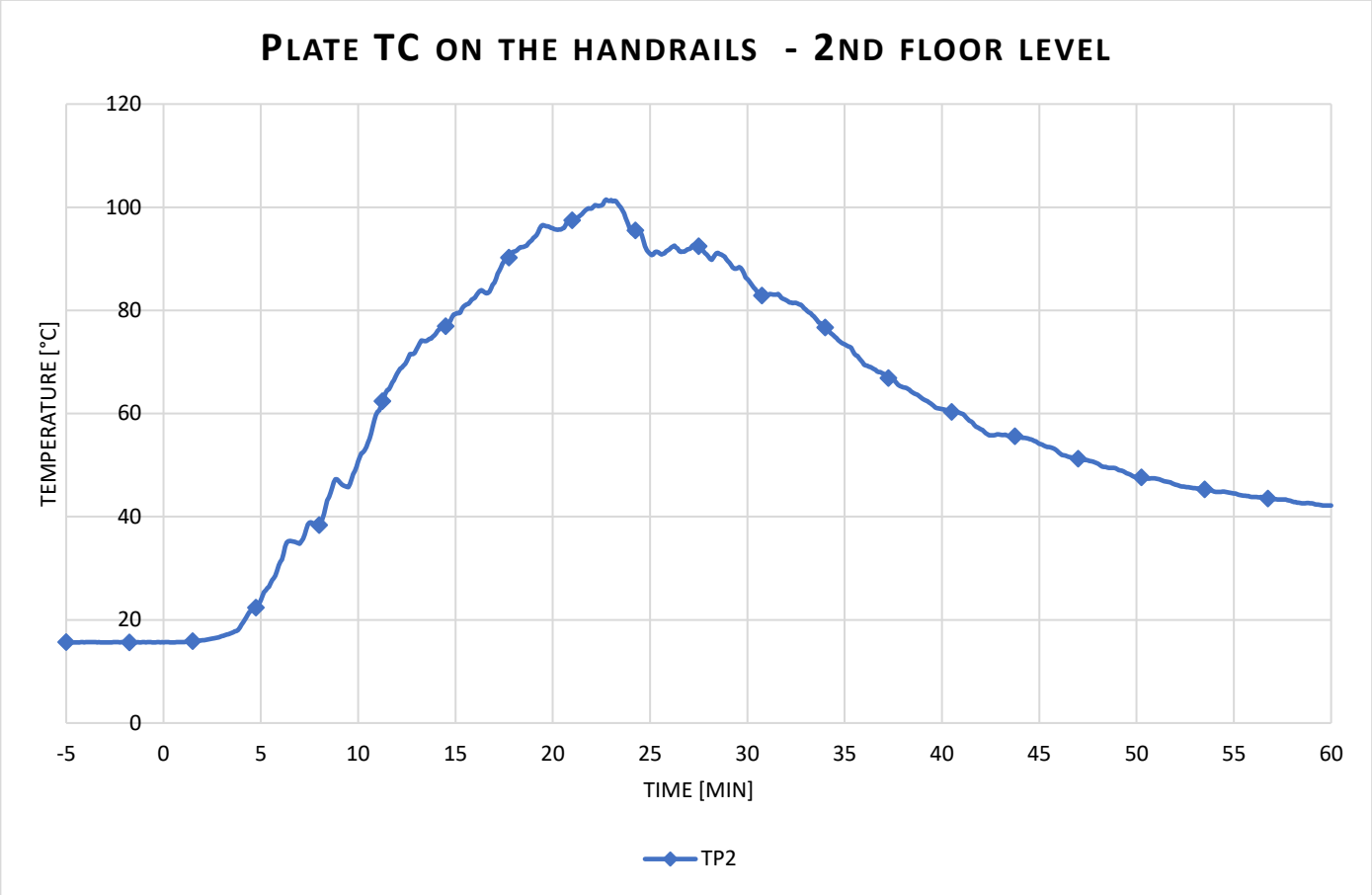

Temperature measured from the Inconel on 2nd floor handrails

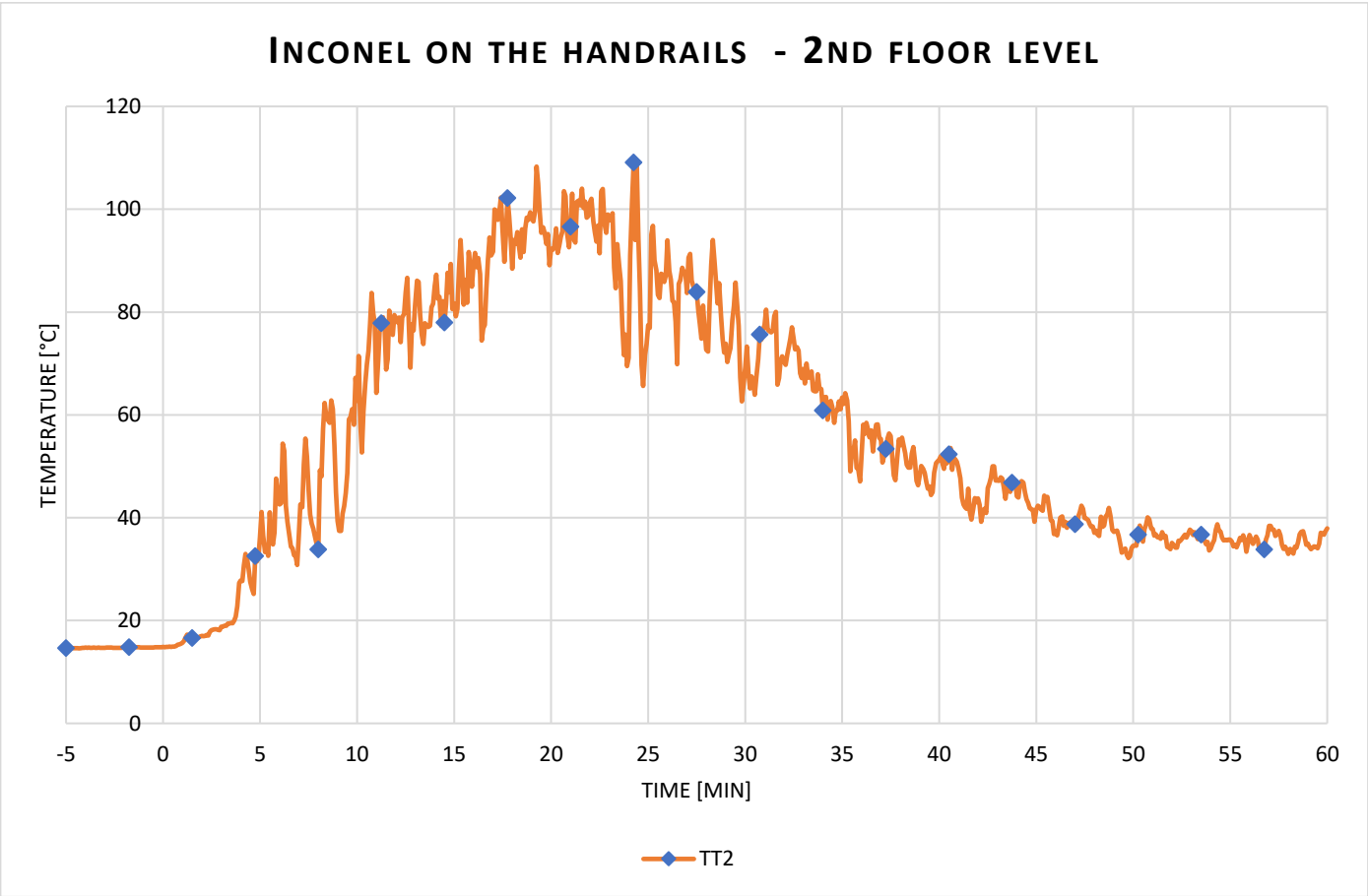

Radiant heat calculated from Plate TC

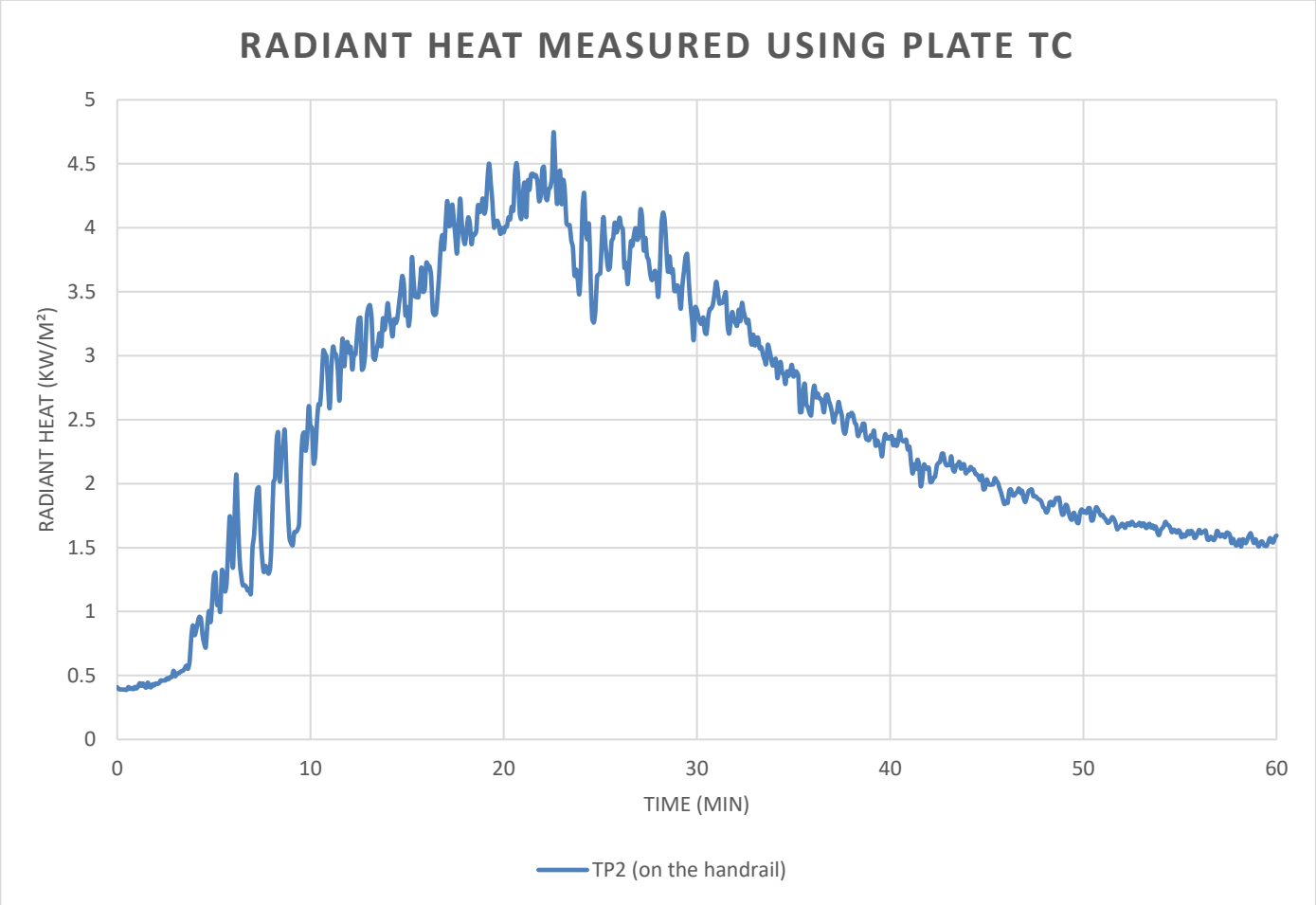

Temperature measured from the Plate TC from 1st floor sidewall

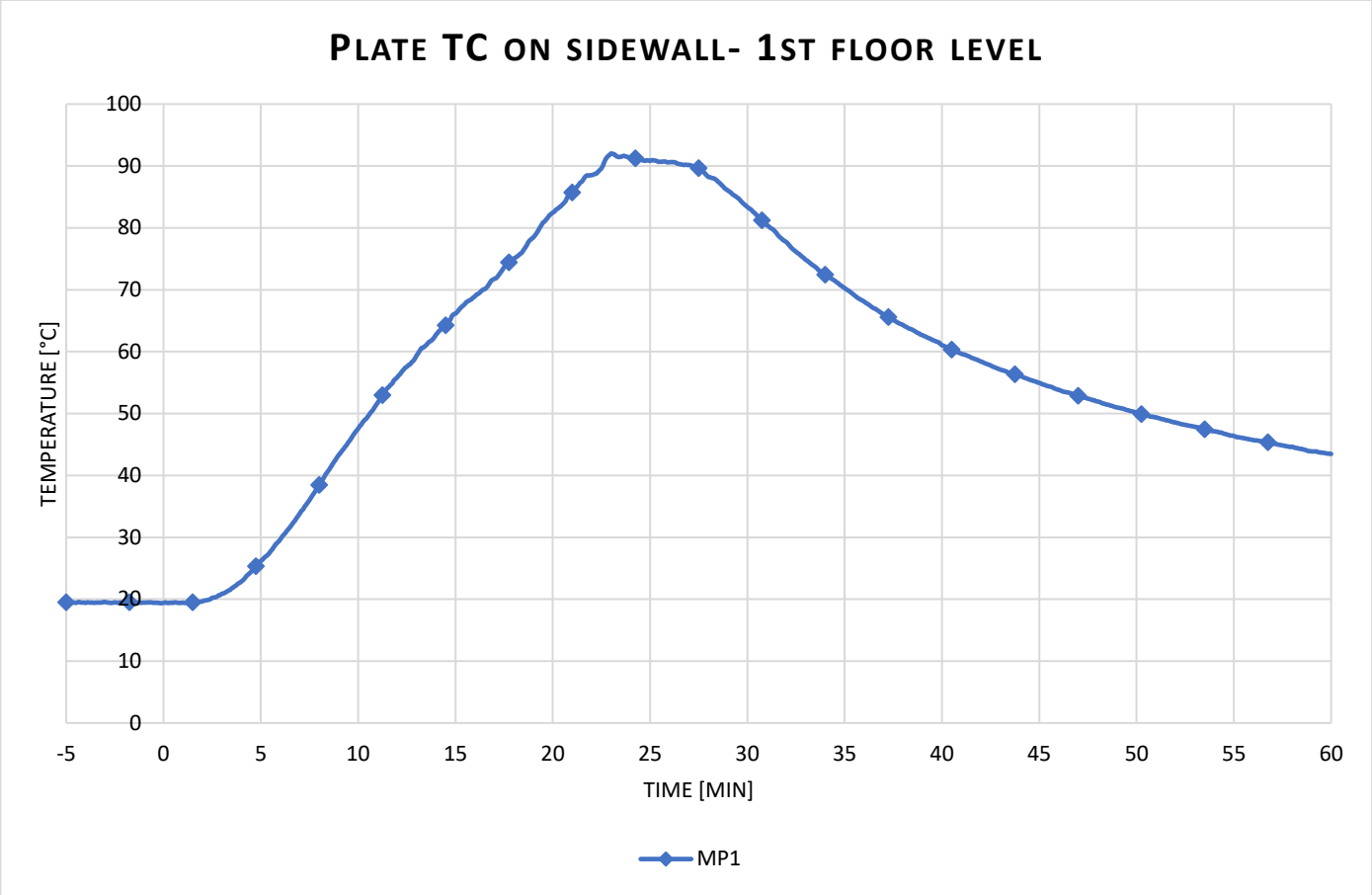

Temperature measured from the Inconel from 1st floor sidewall

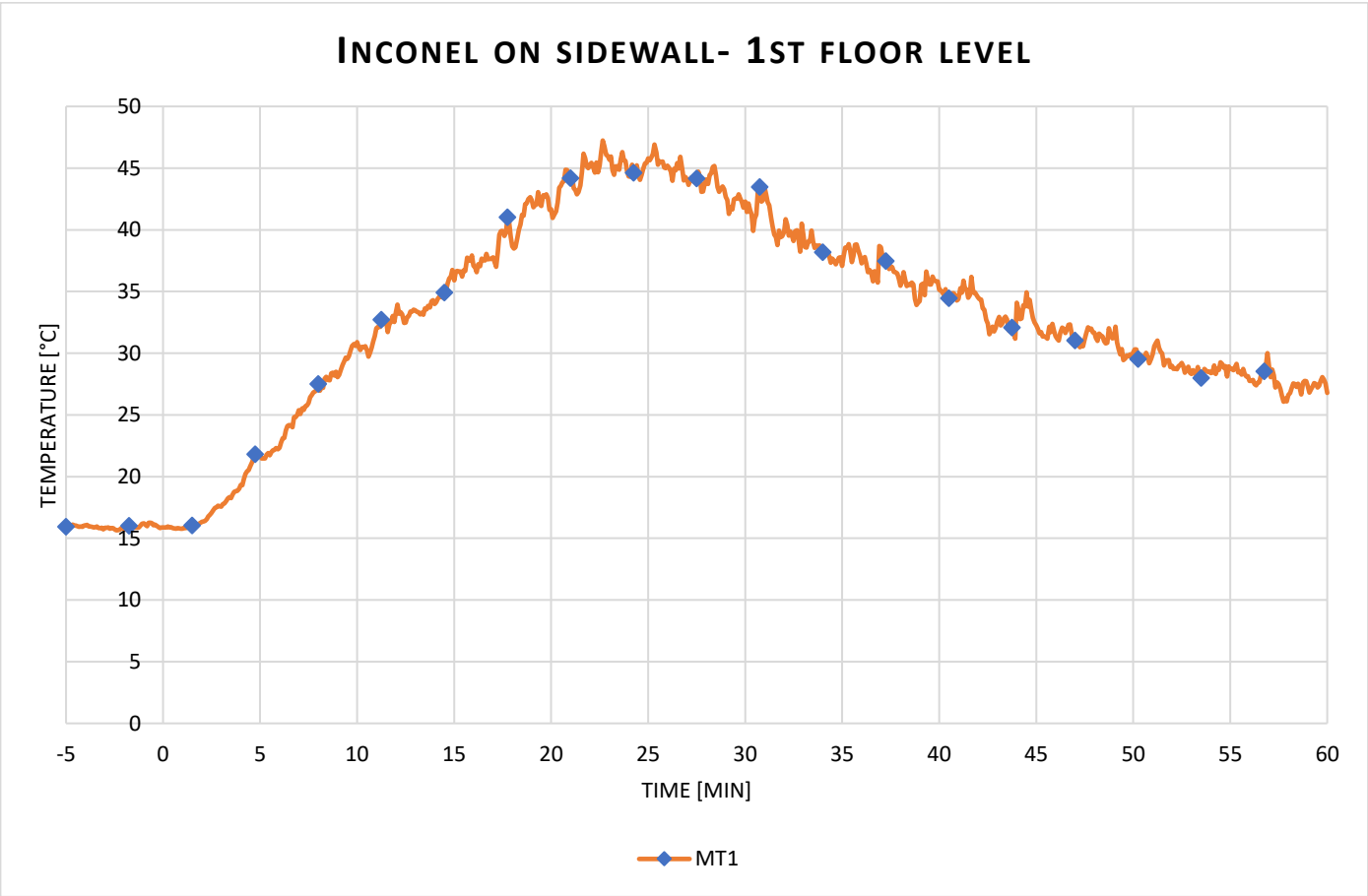

Radiant heat calculated from Plate TC

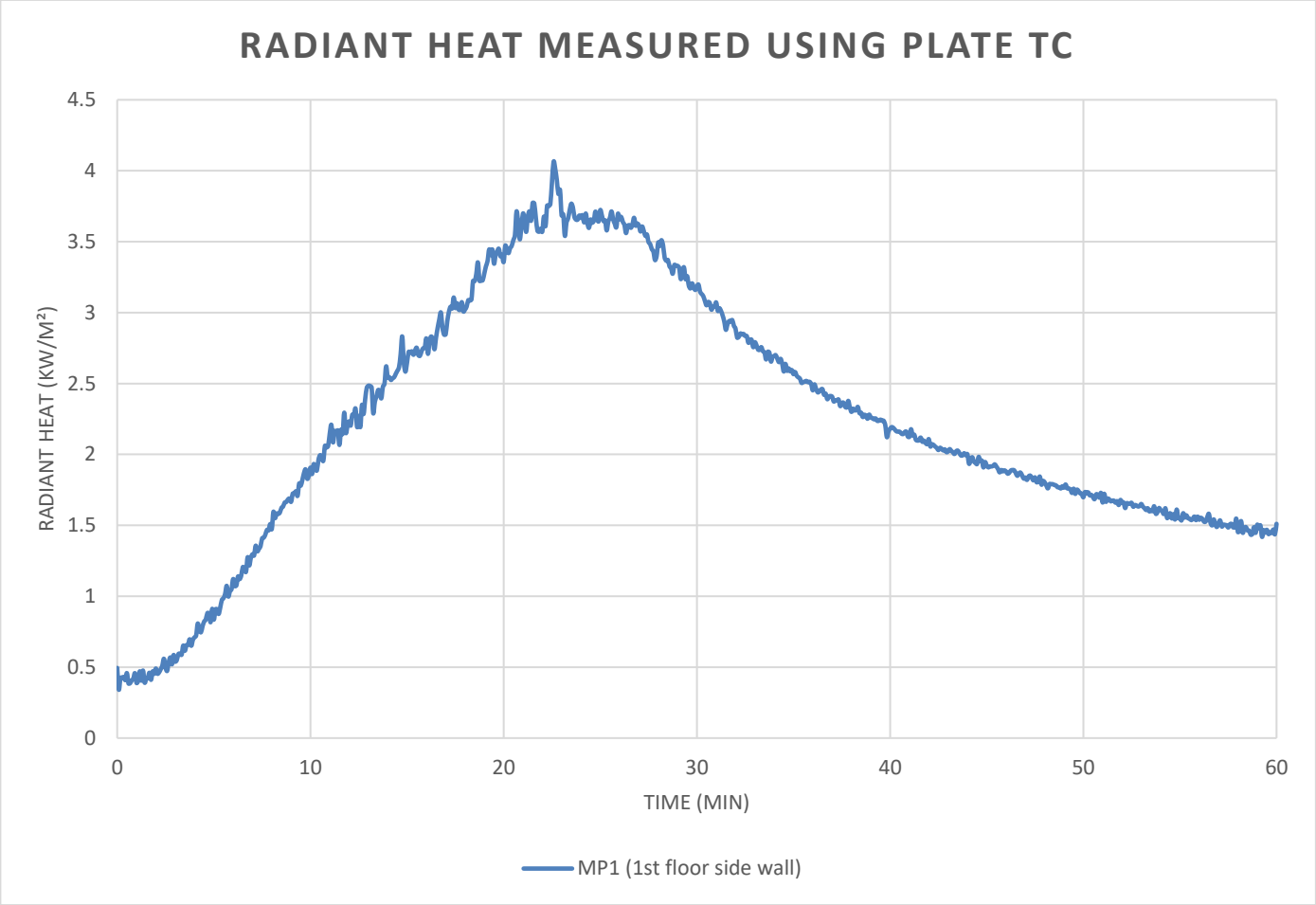

Temperature measured from the Plate TC from 2nd floor sidewall

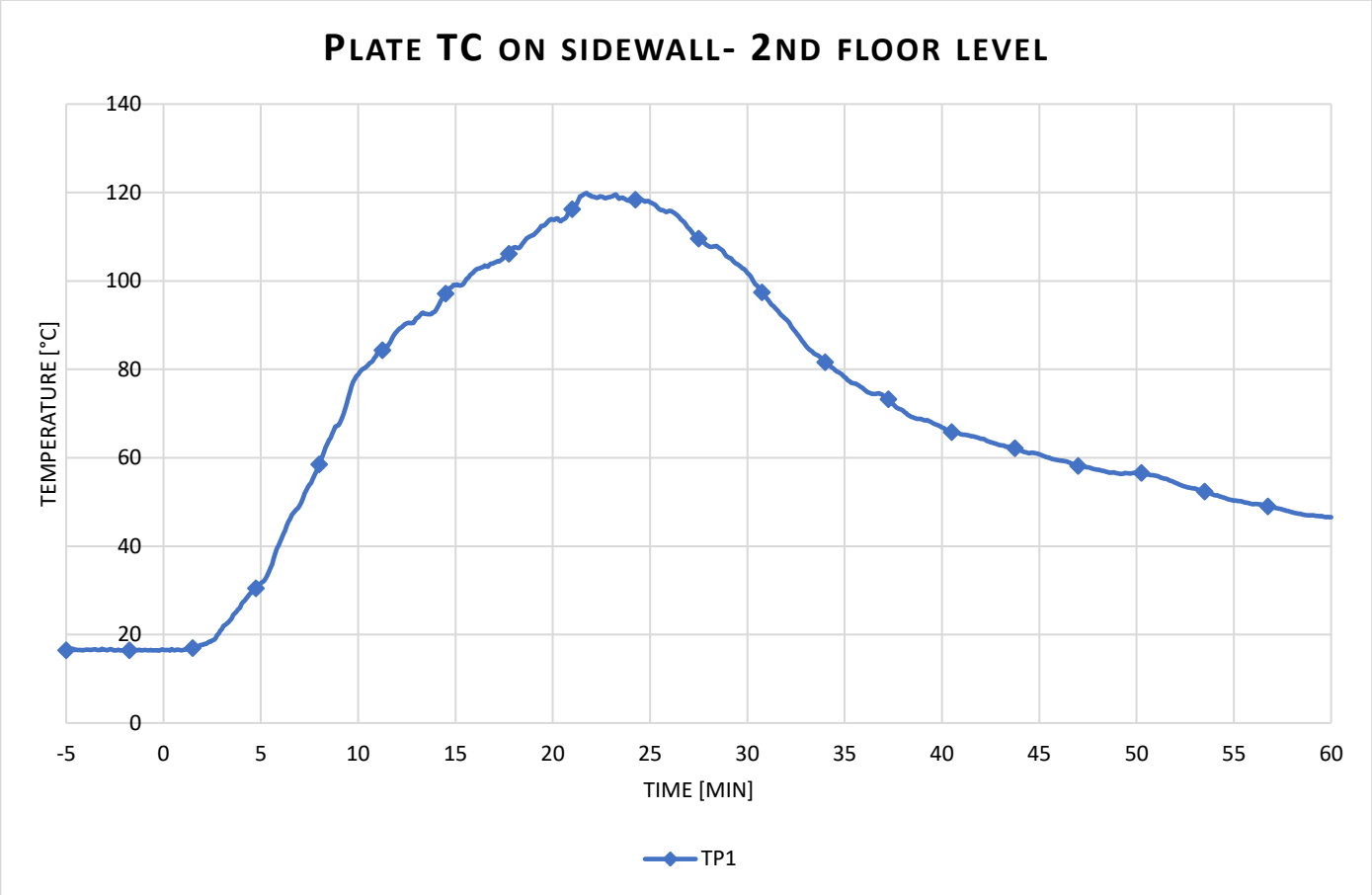

Temperature measured from the Inconel from 2nd floor sidewall

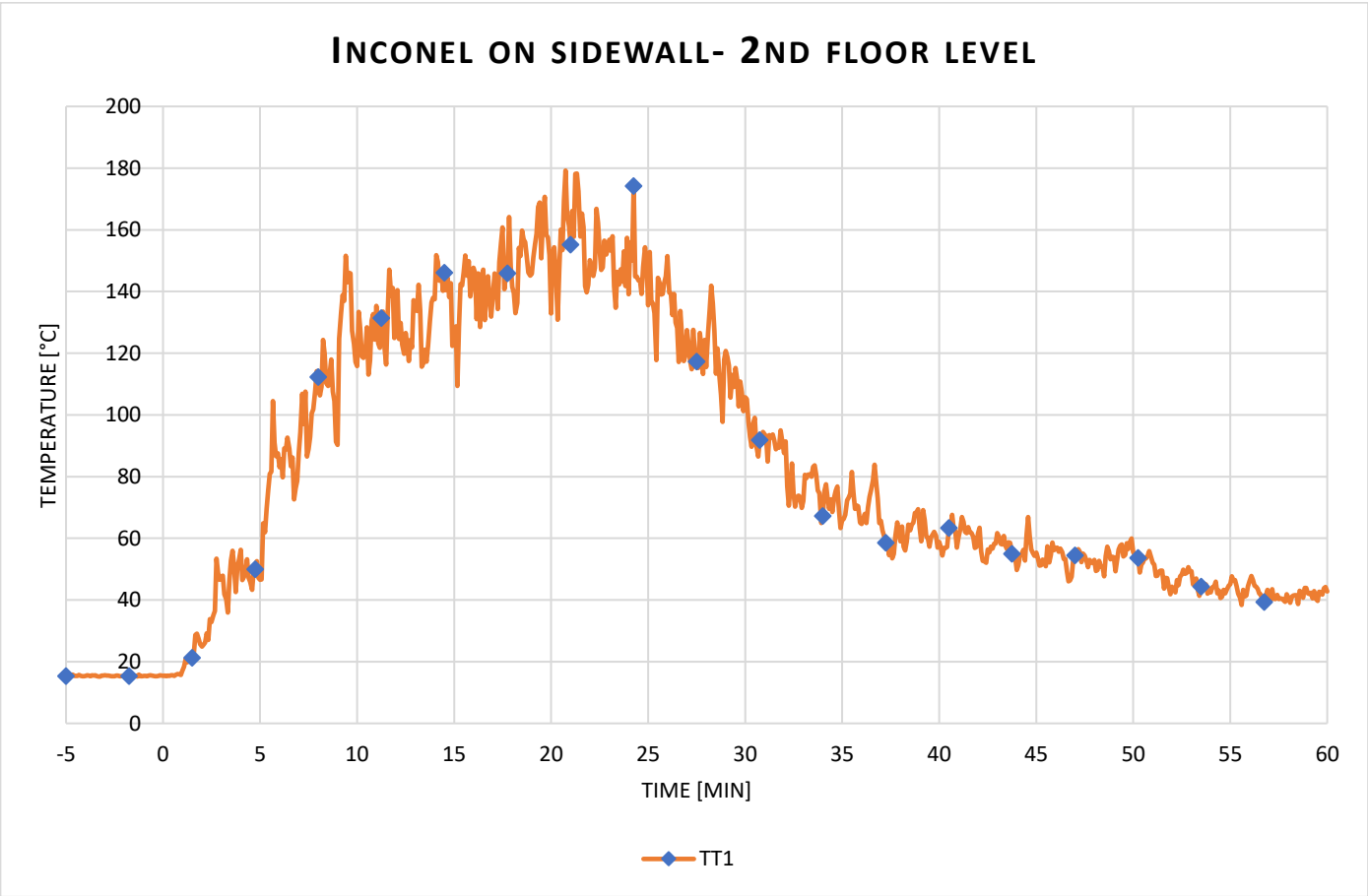

Radiant heat calculated from Plate TC

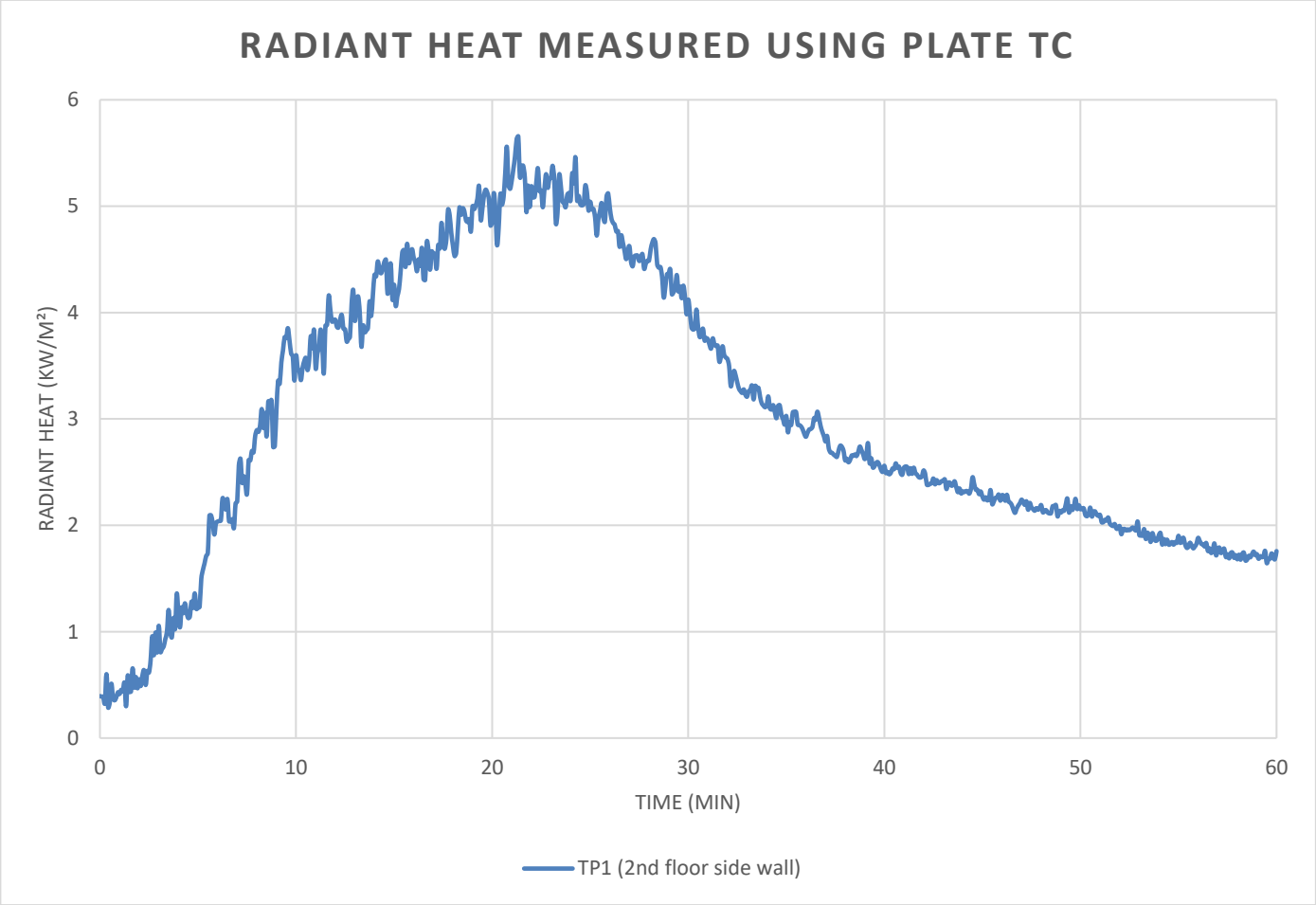

Temperature measured from the Plate TC's on the steel C-section underneath 1st floor

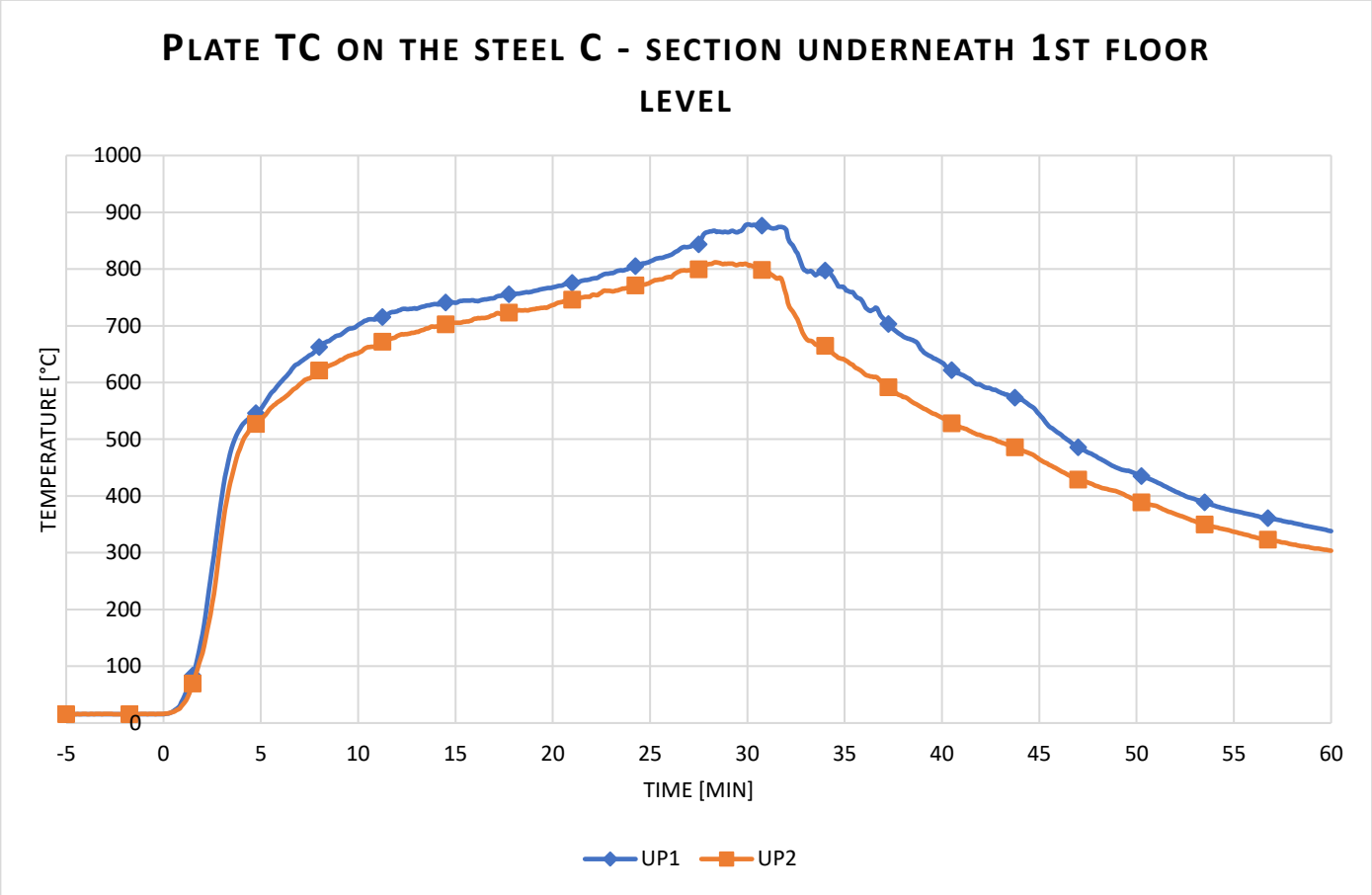

Temperature measured from the Inconels on the steel C-section underneath 1st floor

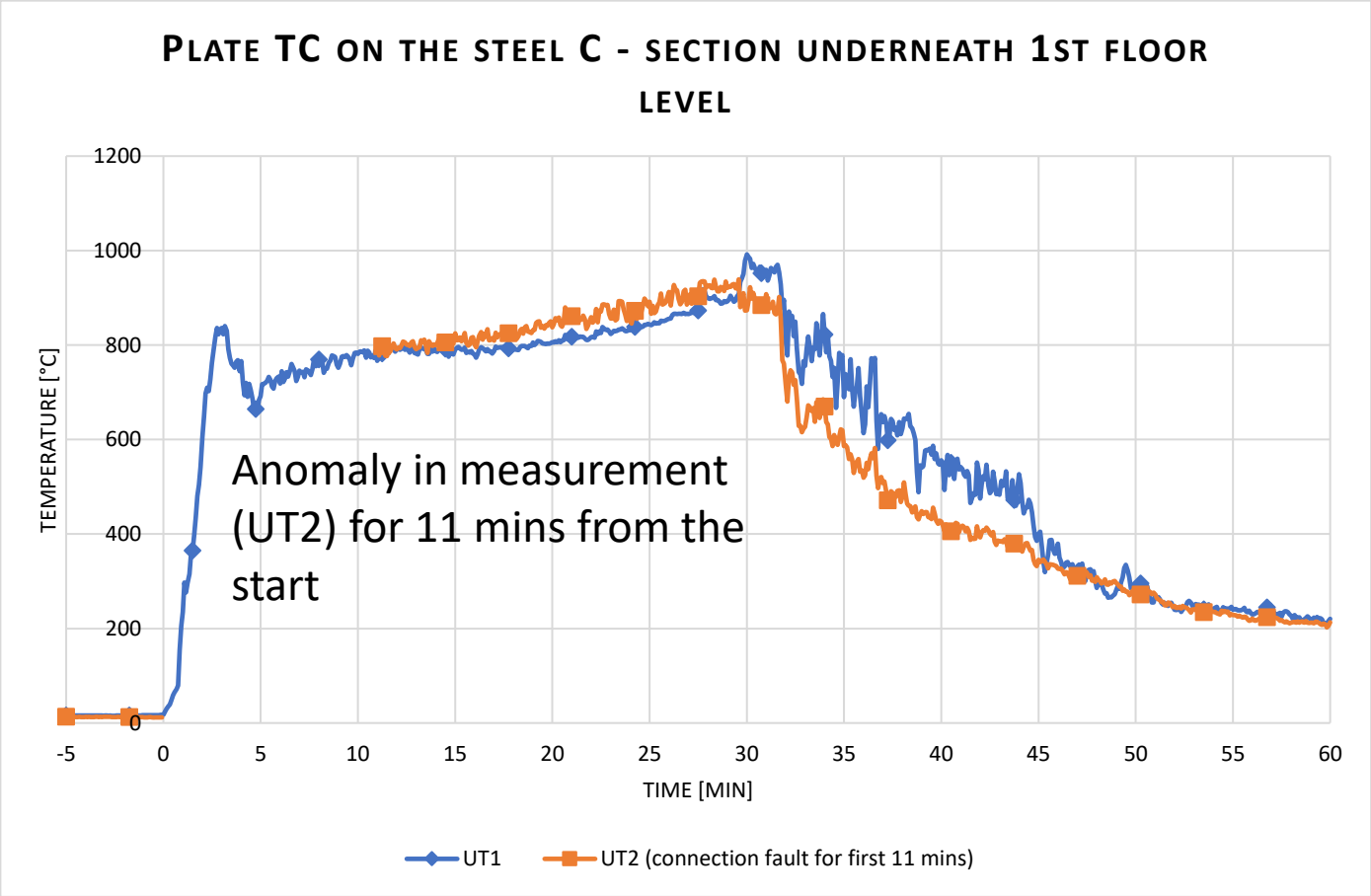

Radiant heat calculated from Plate TC

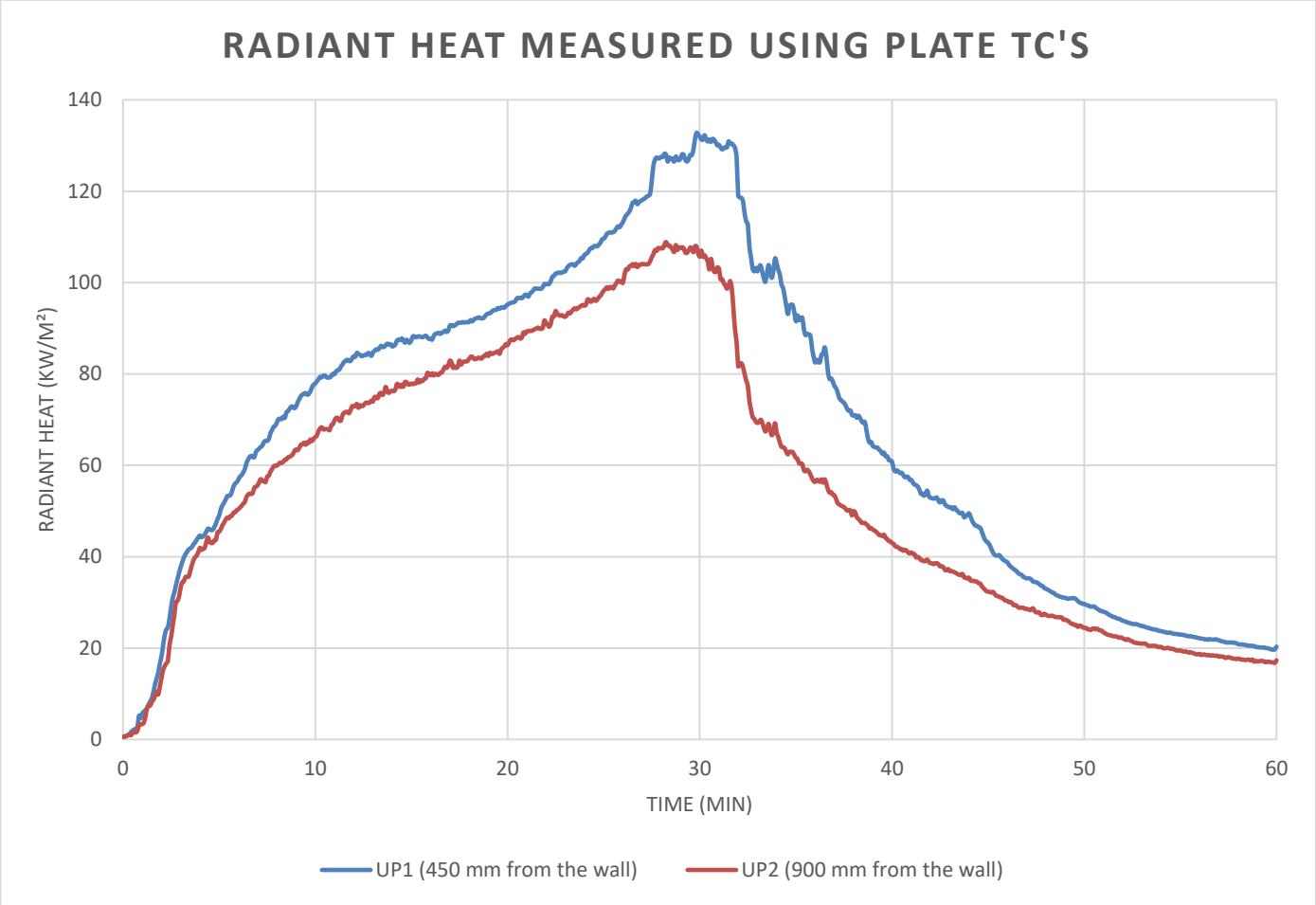

Temperature measured from the Plate TC's on the steel C-section underneath 2nd floor

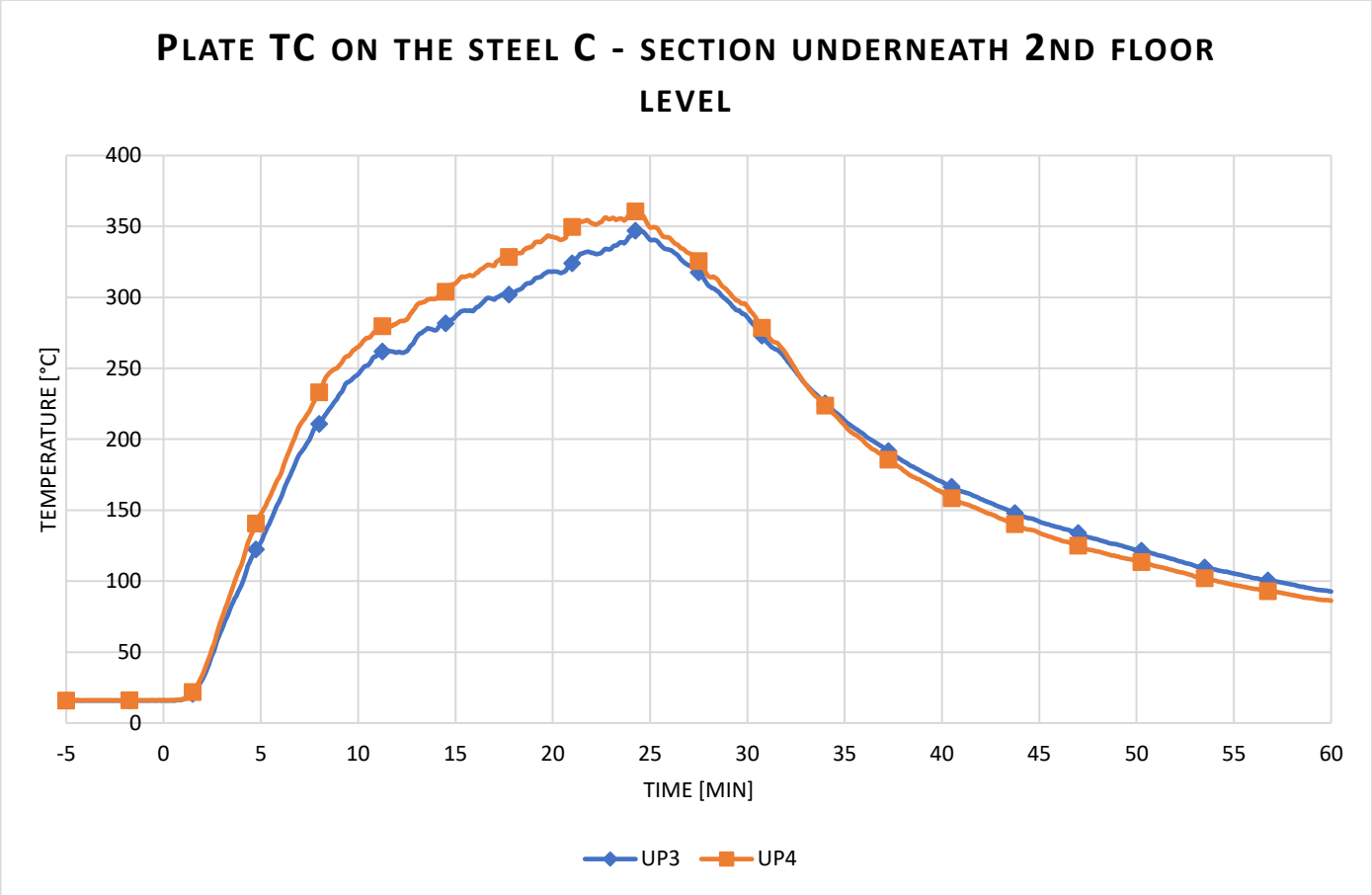

Temperature measured from the Inconels on the steel C-section underneath 1st floor

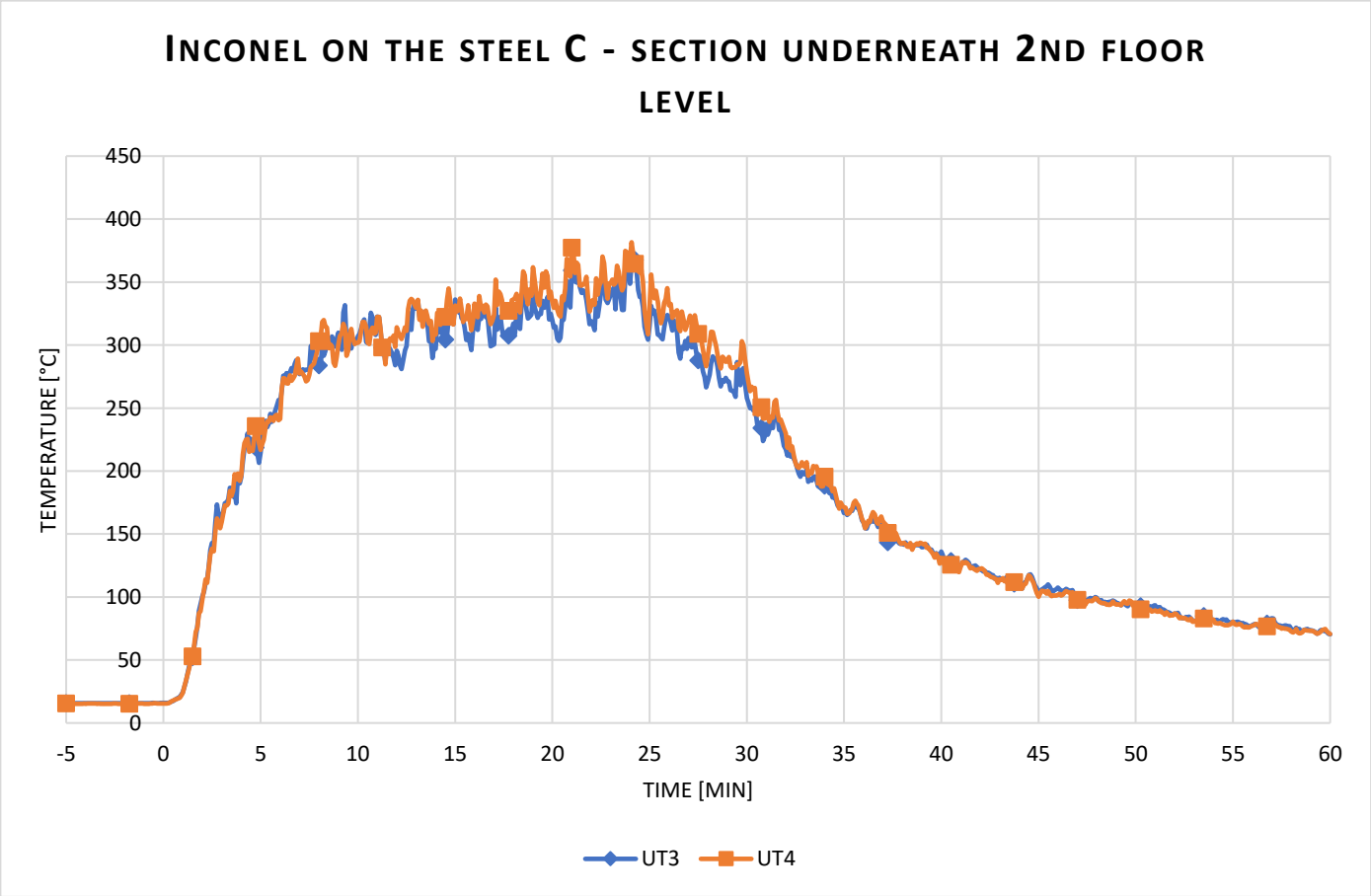

Radiant heat calculated from Plate TC's

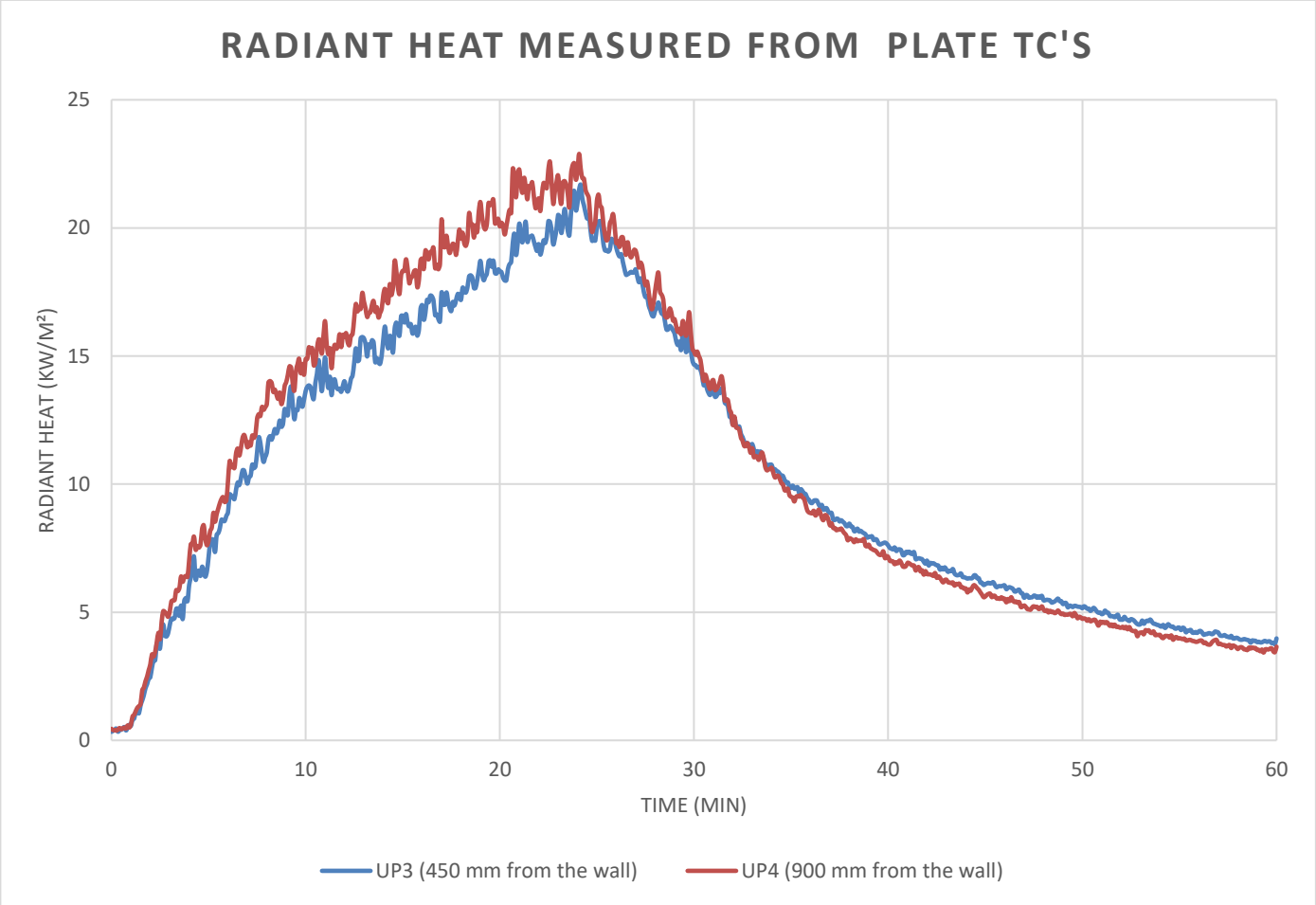

Temperature measured from the Inconels from the side wall – adjacent 1st floor level steel frame

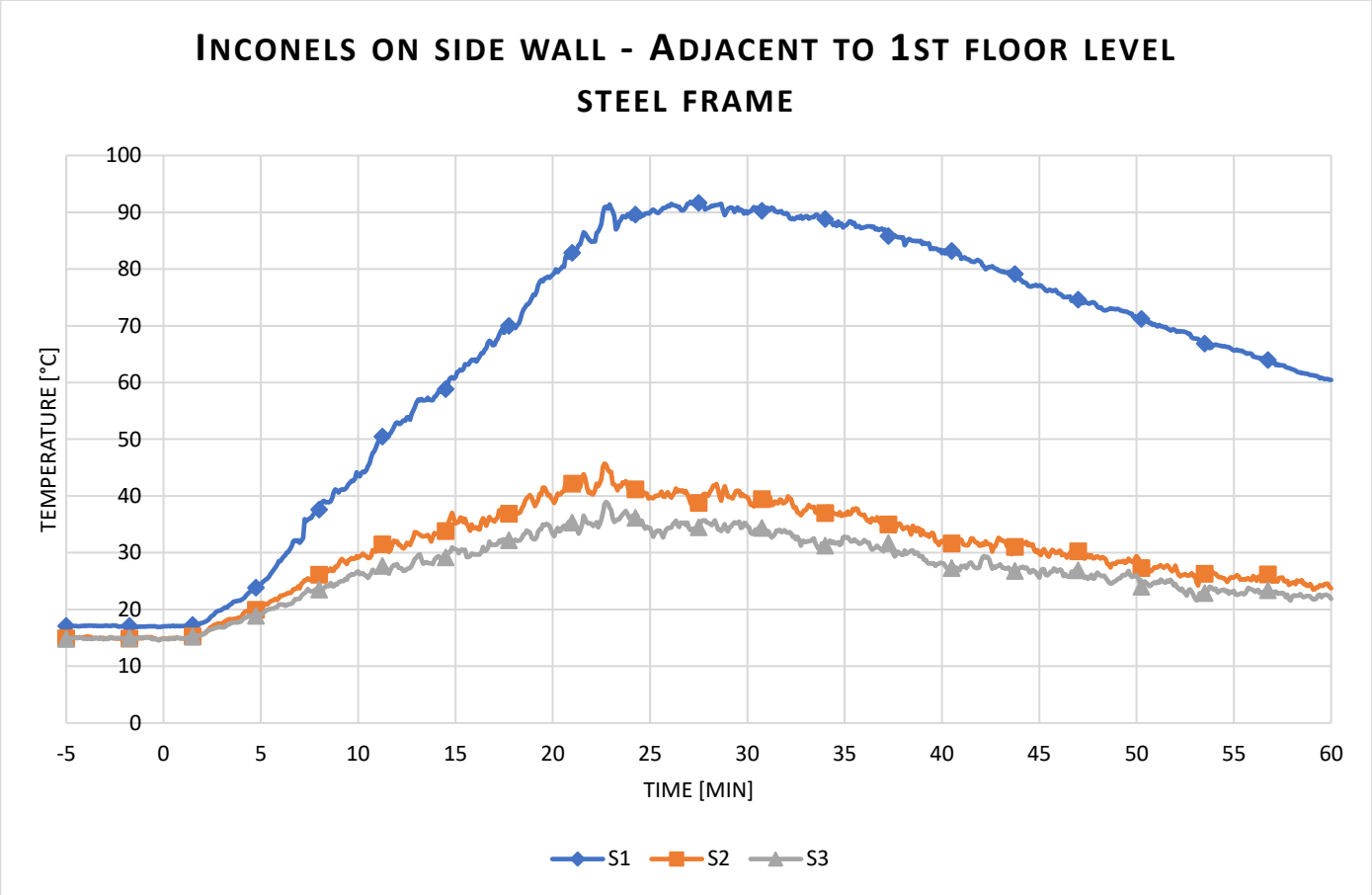

Temperature measured from the Inconels on steel C-section underneath 1st floor

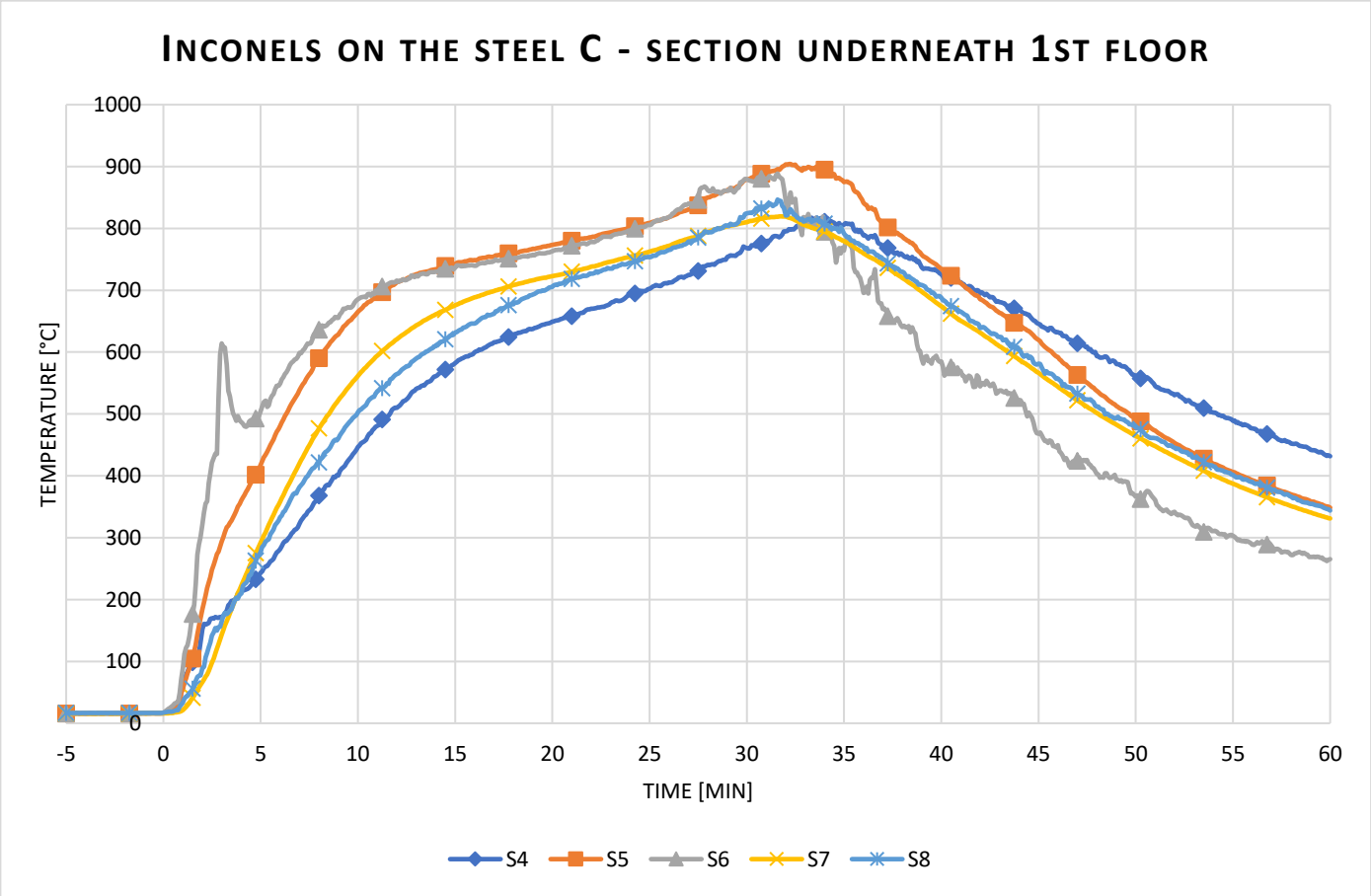

Temperature measured from the Inconels above the handrails facing the crib

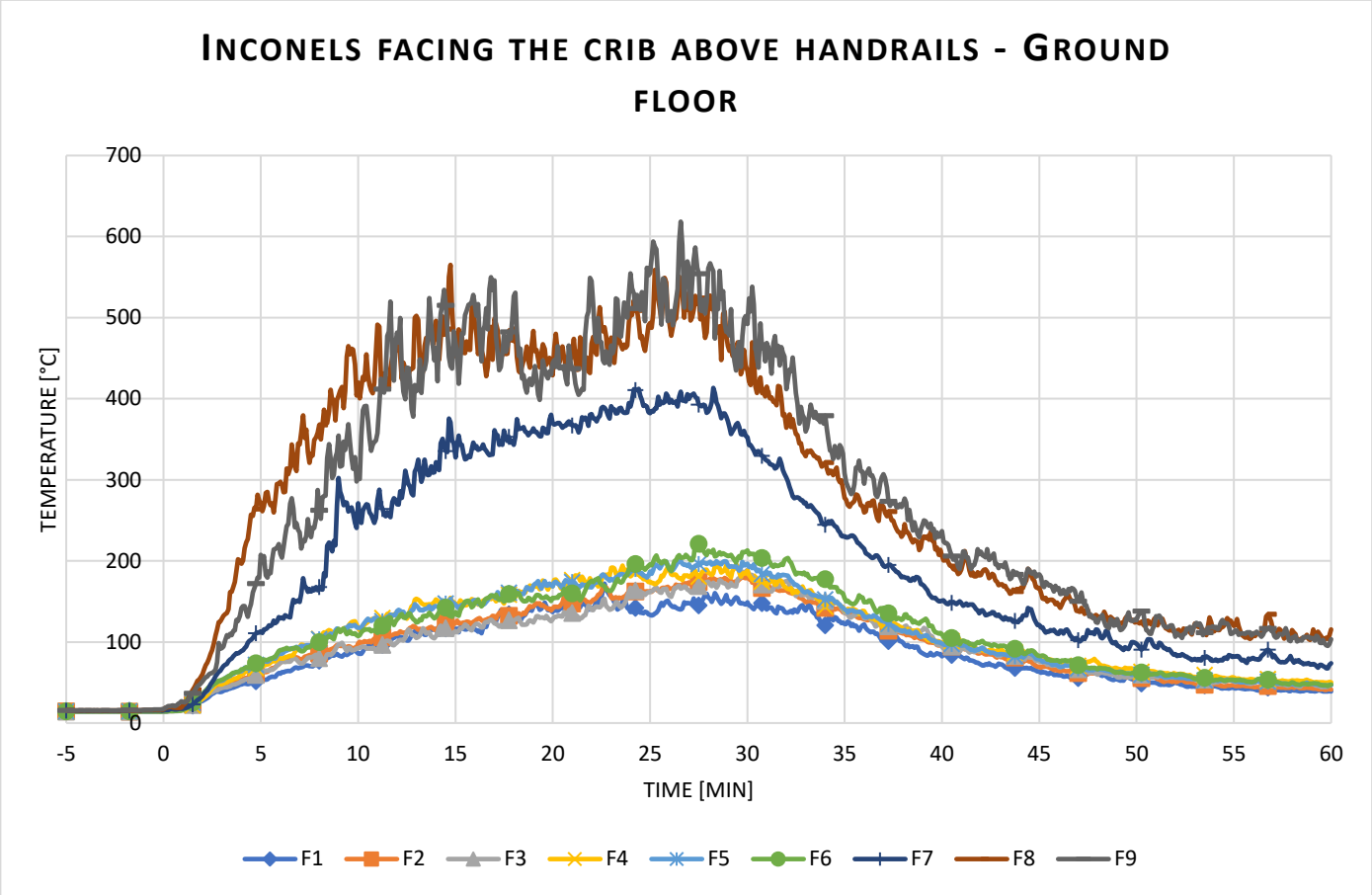

Temperature measured from the Inconels facing outwards on 1st floor on floor and above handrails

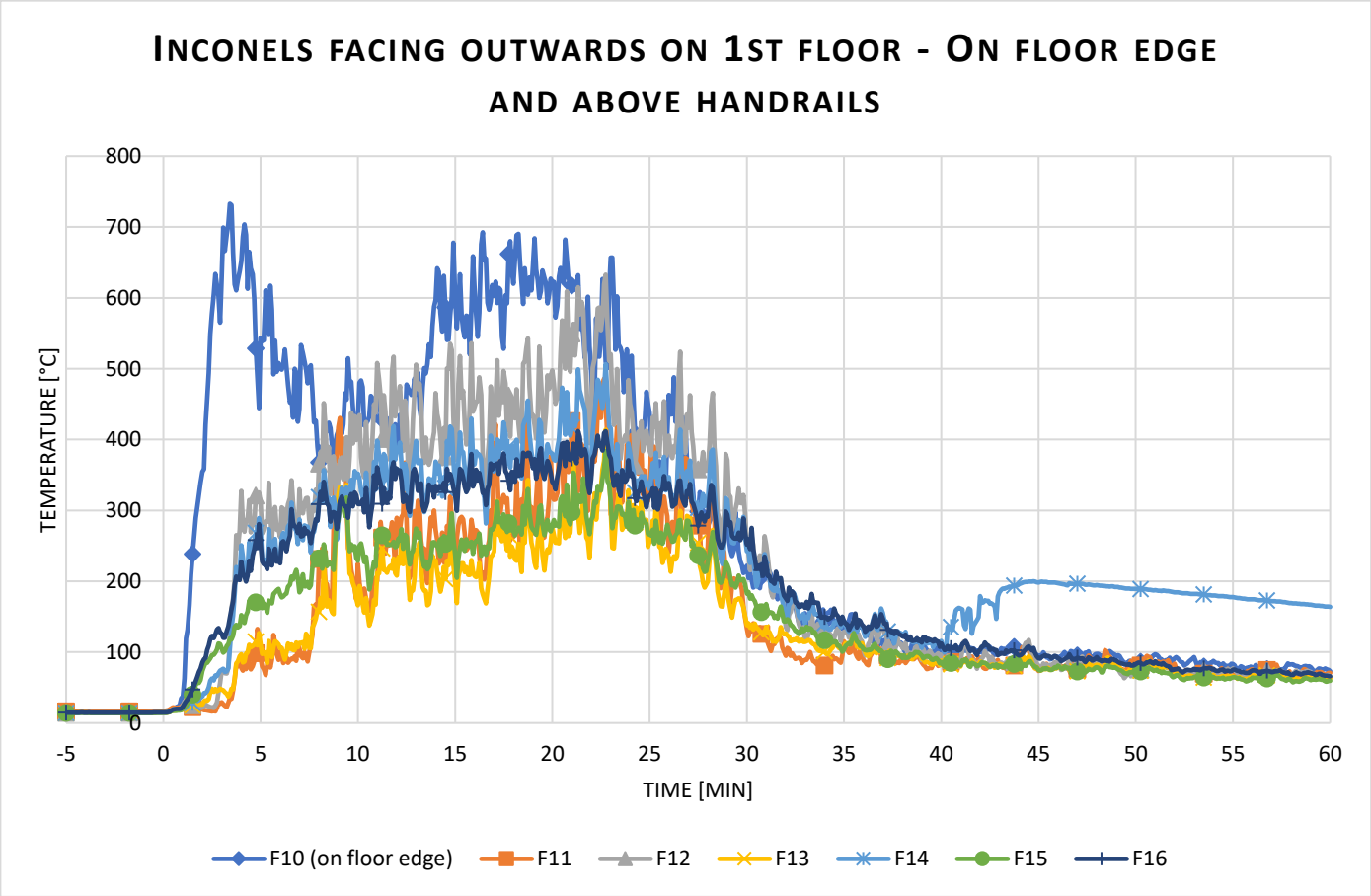

Temperature measured from the Inconels facing outwards on 2nd floor on floor and above handrails

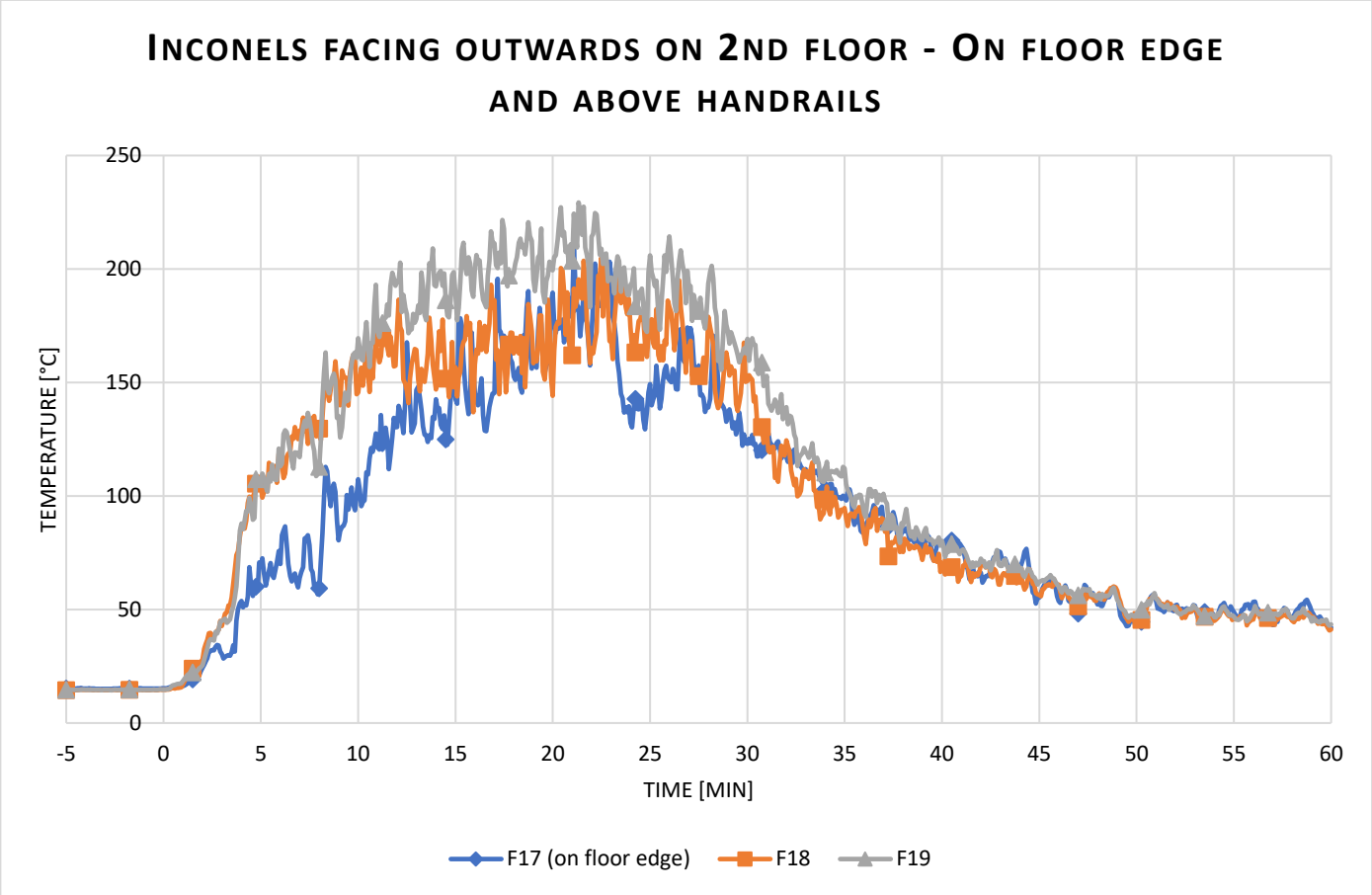

3. PICTURES TAKEN DURING THE TEST

0:06:20

00:03:56

0:20:86

S3
S2
[GR1,GT1,GP1]
G6
0:26:36

S2
S1
0:33:13

0:44:45

01:35

Test date: 27th of November 2023

Project Nr: EUI-23-000746

Test Nr: EUI-23-CHB-000746B

1. INSTRUMENTATION LAYOUT

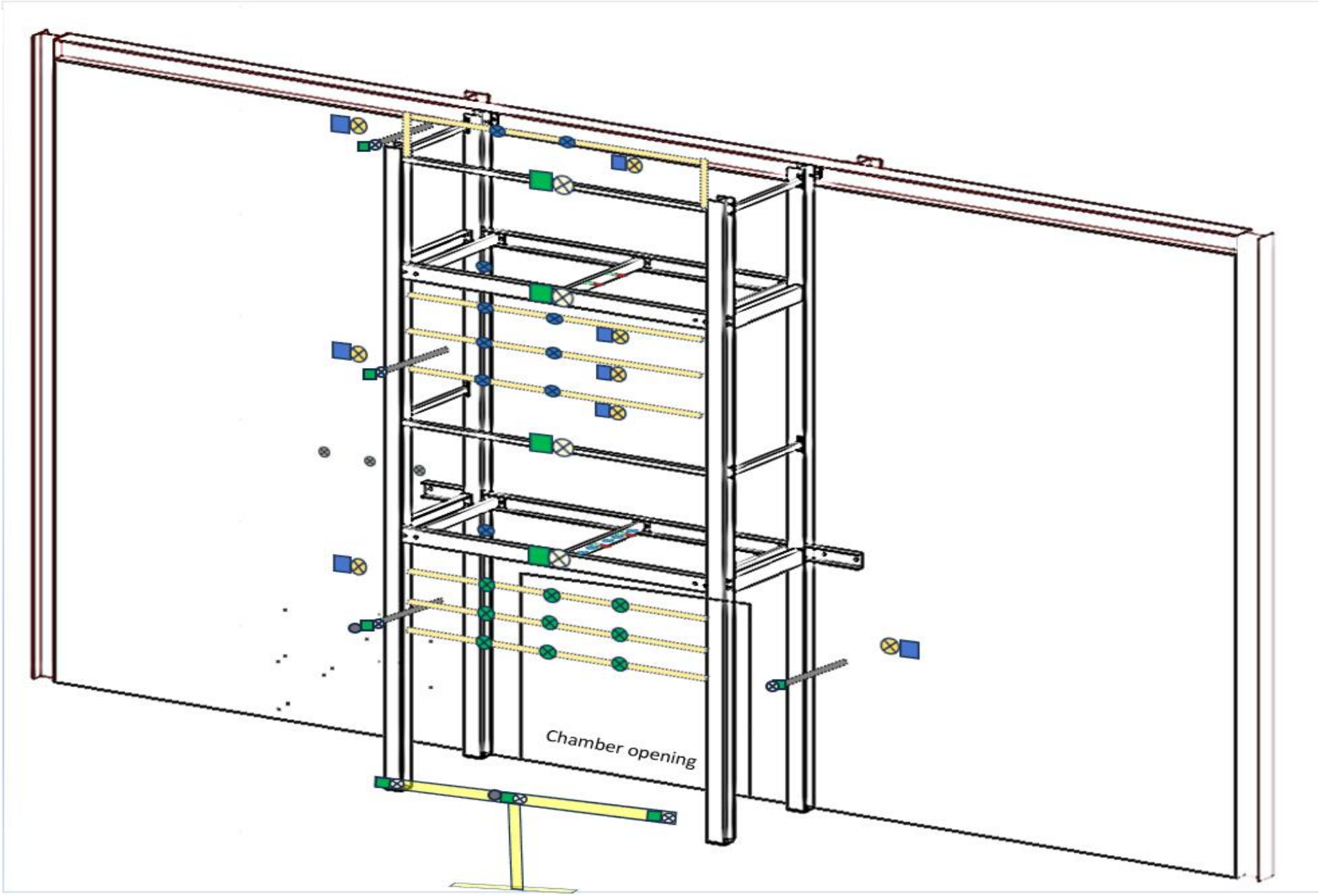

Plate TC on exposed face

Inconel TC on exposed face

Inconel TC on wall

Plate TC on wall

Heat flux meter

2x Plate TC's underside the Balcony floor –
At 450 mm and 900 mm from the wall

2x Inconel TC's underside the Balcony floor –
At 450 mm and 900 mm from the wall

3m long TC facing outwards,
extends out by 50 mm

TC on the steel C-section
S4 – exposed edge of wall
S5 – 300mm away from the wall
S6 – 600mm away from the wall
S7 – 900mm away from the wall
S8 – 1200mm away from the wall

3m long TC facing the crib,
extends out by 50 mm

Nomenclature:

The first word of each acronym is to identify the floor level:

G - Ground floor

S – Side edge to the chamber opening

M – Middle floor

T – Top floor

F – Front facing Inconels

The second word denotes the instrument:

Fluxmeter (R), Plate TC (P), Inconel (T)

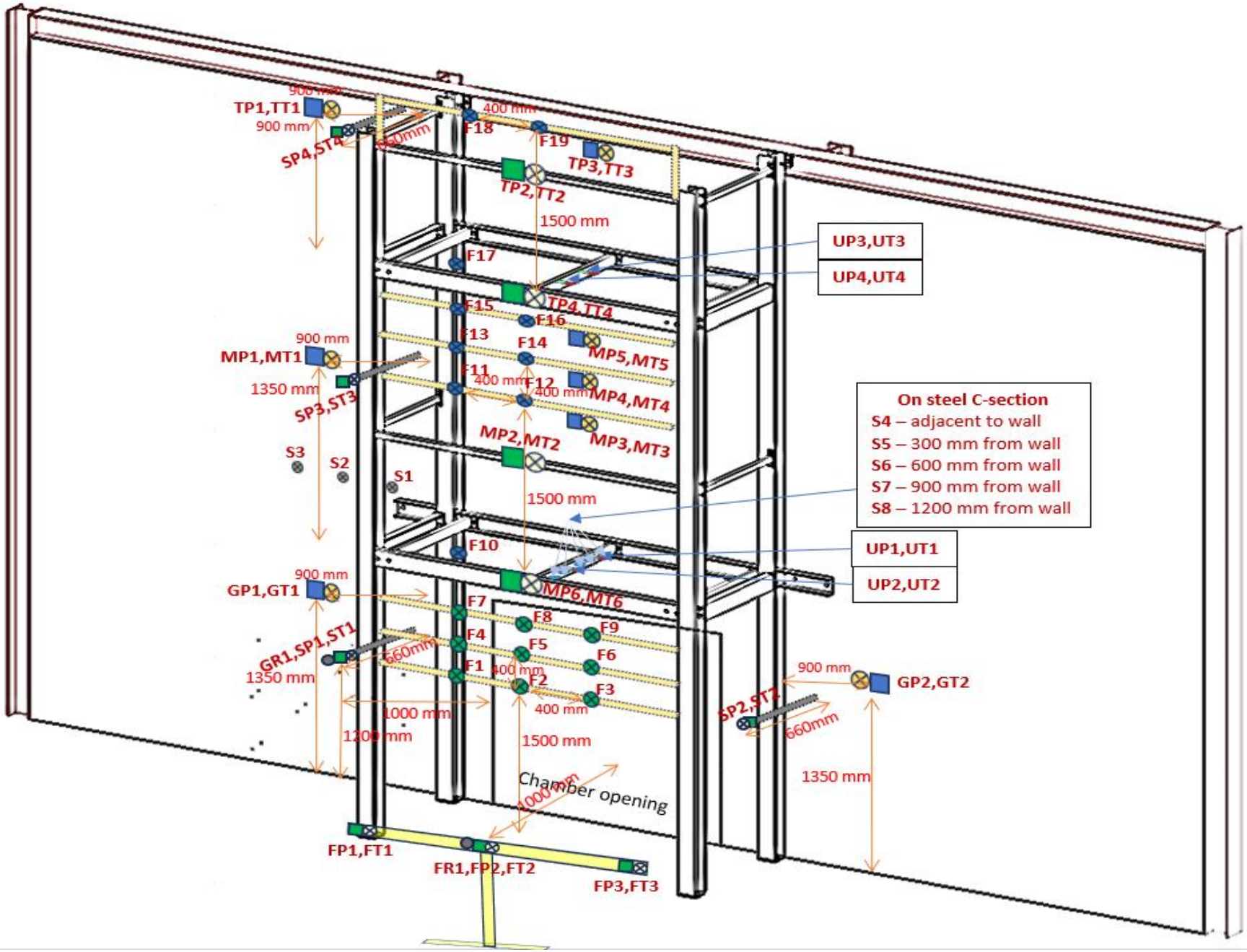
TP1,TT1
900 mm
SP4,ST4
660mm
400 mm
F18
F19
TP3,TT3
TP2,TT2
1500 mm
F17
UP3,UT3
UP4,UT4
TP4,TT4
F15
F16
F13
F14
MP5,MT5
900 mm
MP1,MT1
F11
400 mm
F12
400 mm
MP4,MT4
1350 mm
SP3,ST3
MP3,MT3
MP2,MT2
S3
S2
S1
1500 mm
On steel C-section
S4 – adjacent to wall
S5 – 300 mm from wall
S6 – 600 mm from wall
S7 – 900 mm from wall
S8 – 1200 mm from wall
F10
UP1,UT1
UP2,UT2
900 mm
GP1,GT1
MP6,MT6
F7
F8
F9
F4
F5
F6
GR1,SP1,ST1
660mm
F1
400 mm
F2
F3
1350 mm
900 mm
GP2,GT2
SP2,ST2
660mm
1000 mm
400 mm
1200 mm
1500 mm
1350 mm
Chamber opening
1000 mm
FP1,FT1
FR1,FP2,FT2
FP3,FT3

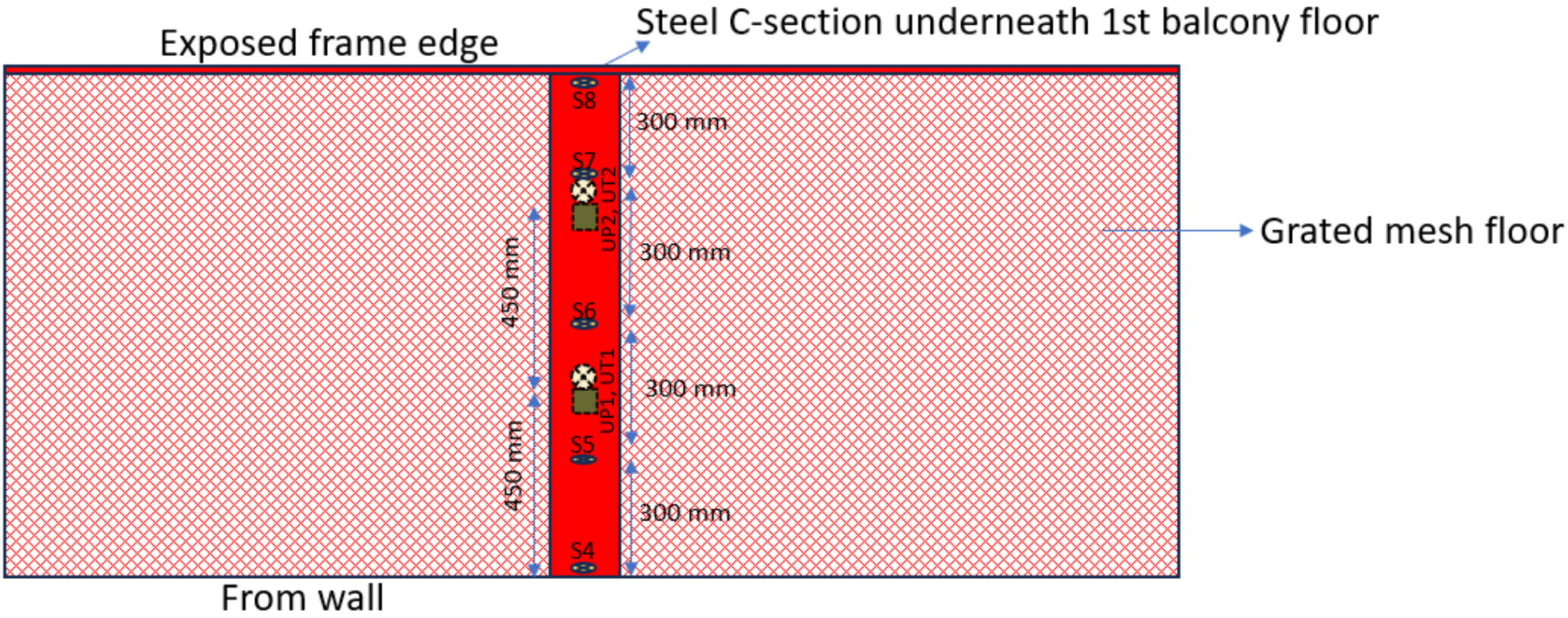

S4 – 10 mm from the wall on Steel C section to measure steel temperature
S5 – 300 mm from the wall on Steel C section to measure steel temperature
S6 – 600 mm from the wall on Steel C section to measure steel temperature
S7 – 900 mm from the wall on Steel C section to measure steel temperature
S8 – 1200 mm from the wall on Steel C section to measure steel temperature

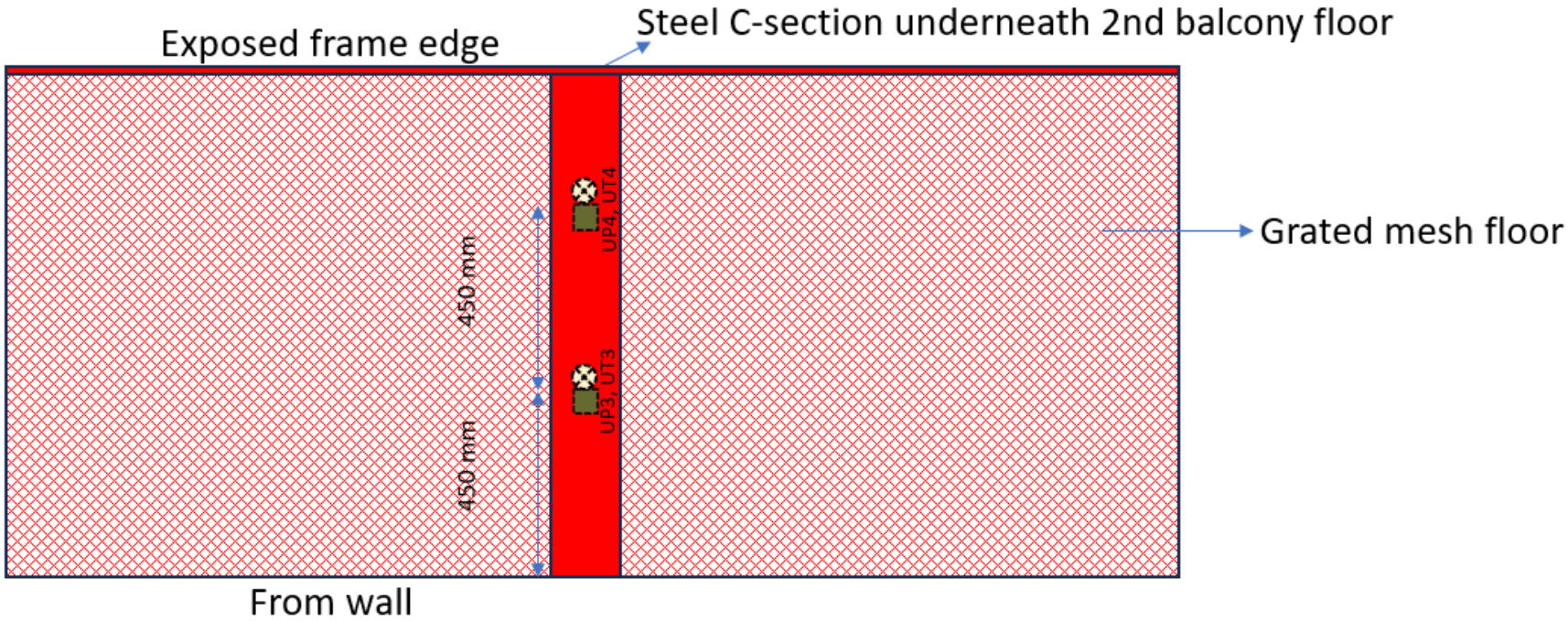
Exposed frame edge
Steel C-section underneath 2nd balcony floor
Grated mesh floor
450 mm
450 mm
UP4, UT4
UP3, UT3
From wall

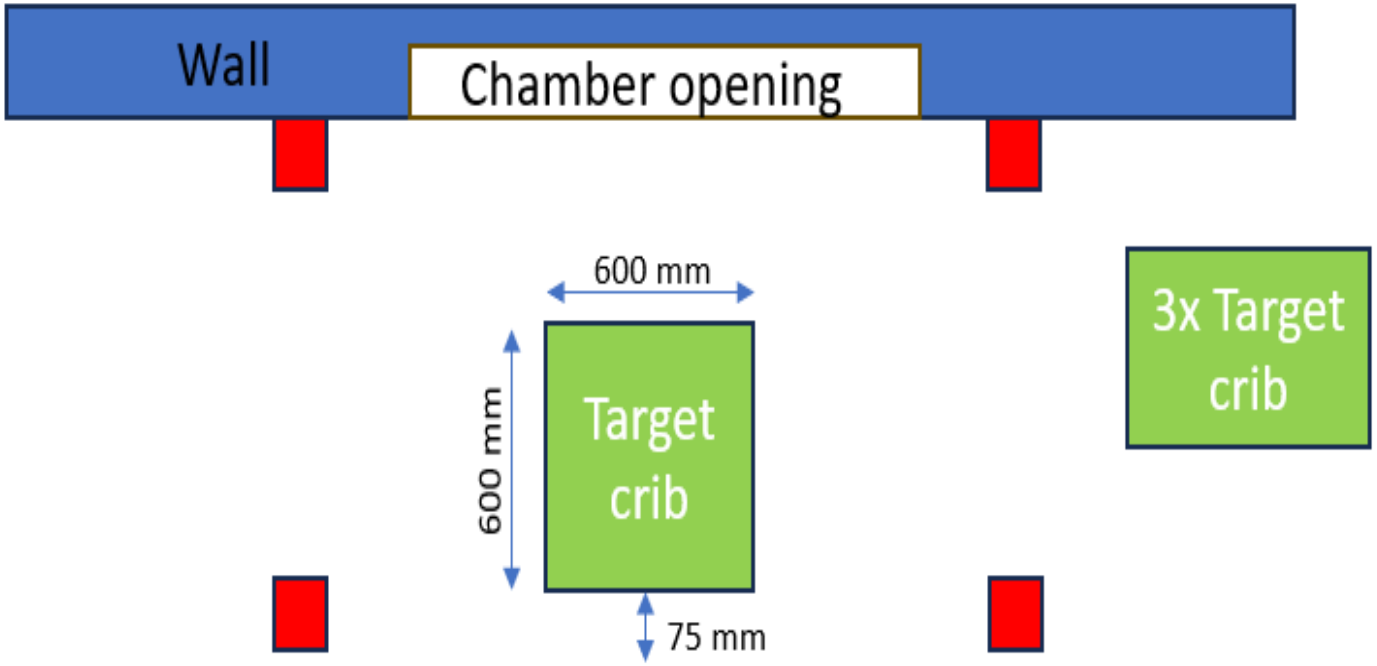

On each floor
(Ground, 1st and 2nd floor)
Installed at a distance of
75 mm
away from the exposed edge.

Figure 1: Elevation view of the system before test.

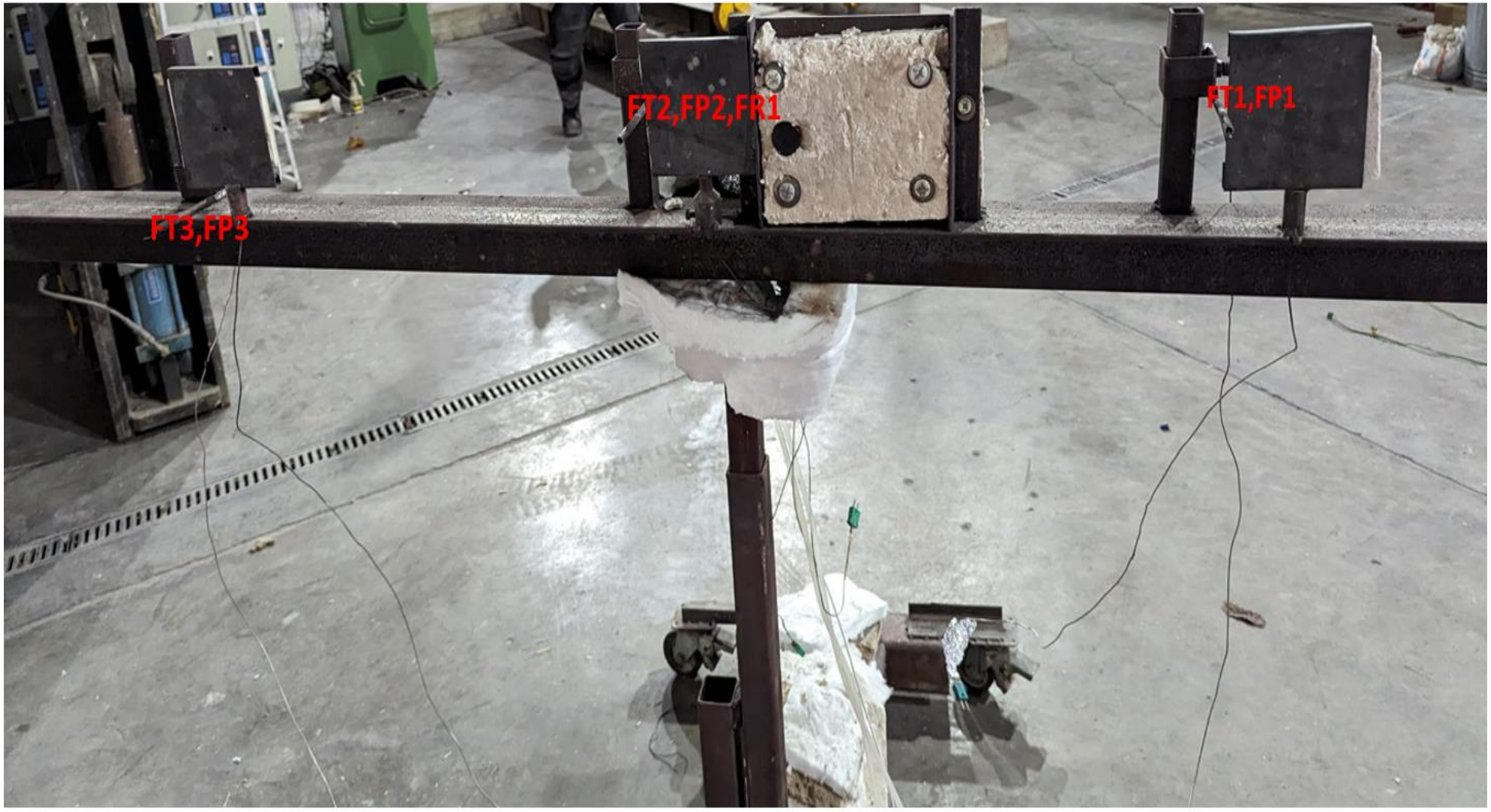

Figure 2: The front facing Fluxmeter, Plate TC's and Inconels (placed 1m away from the target crib).

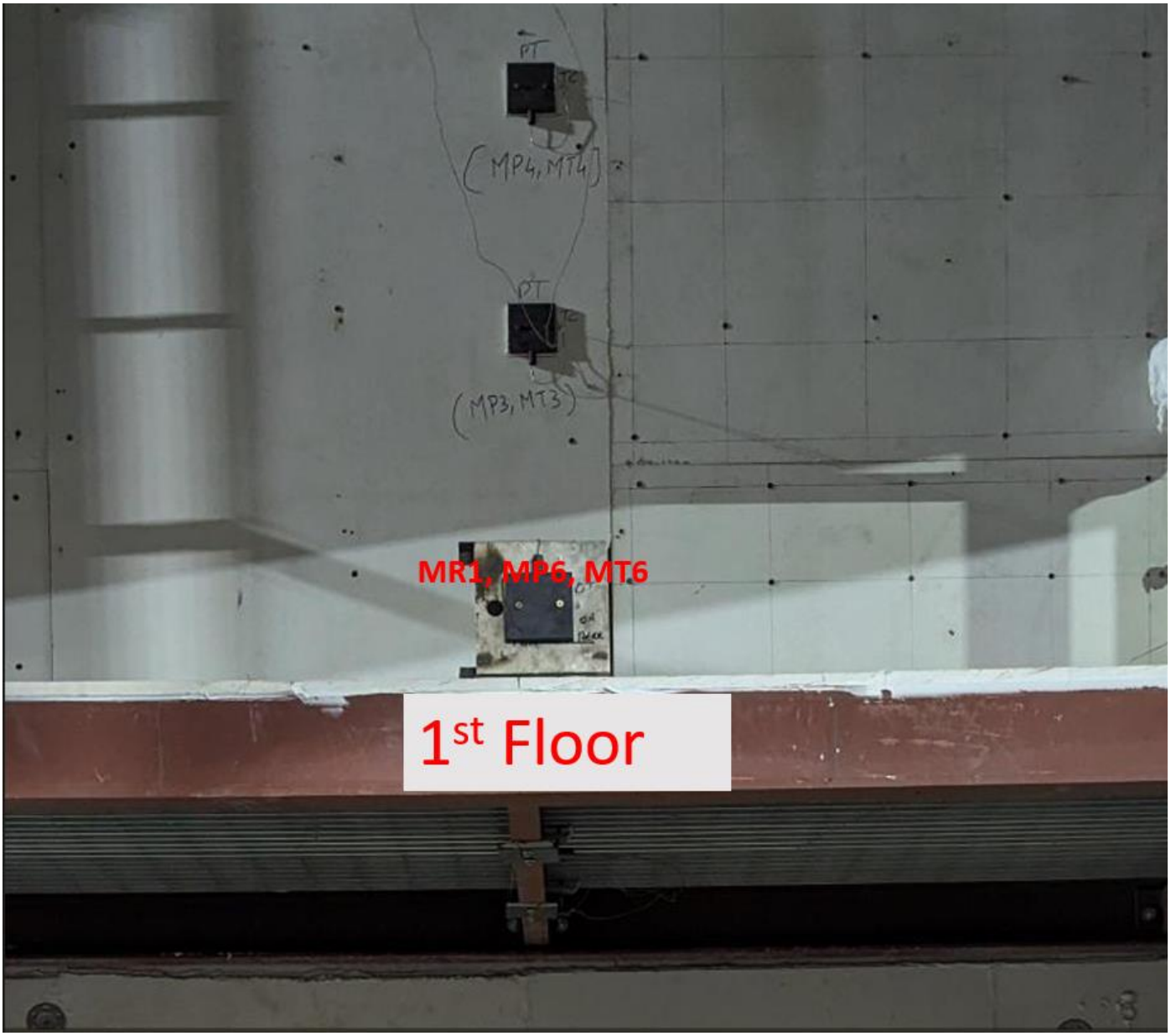

Figure 3: Representation of instrumentation on 1st floor

2. DATA RESULTS

Heat Release rate (Hood)

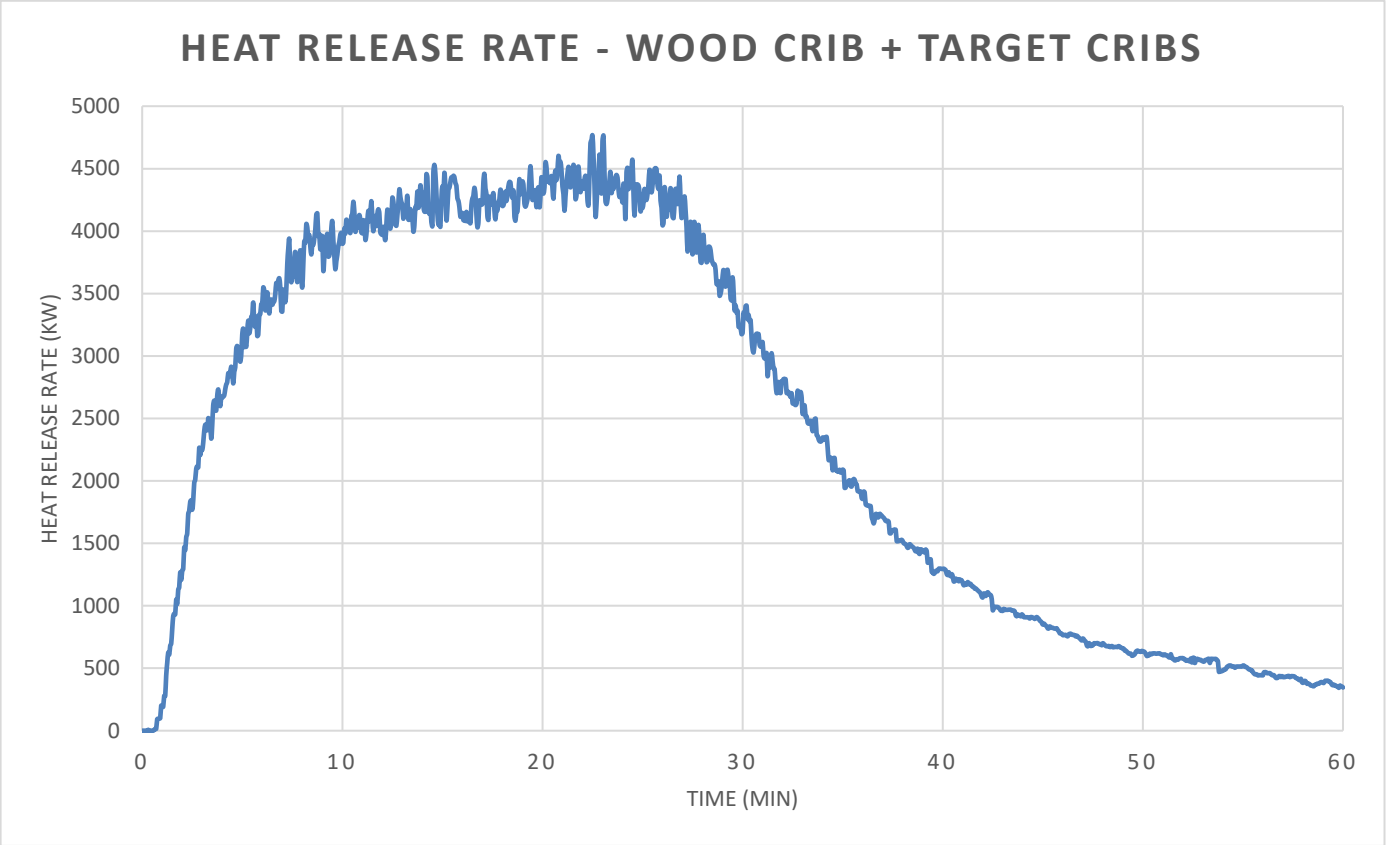

Mass loss

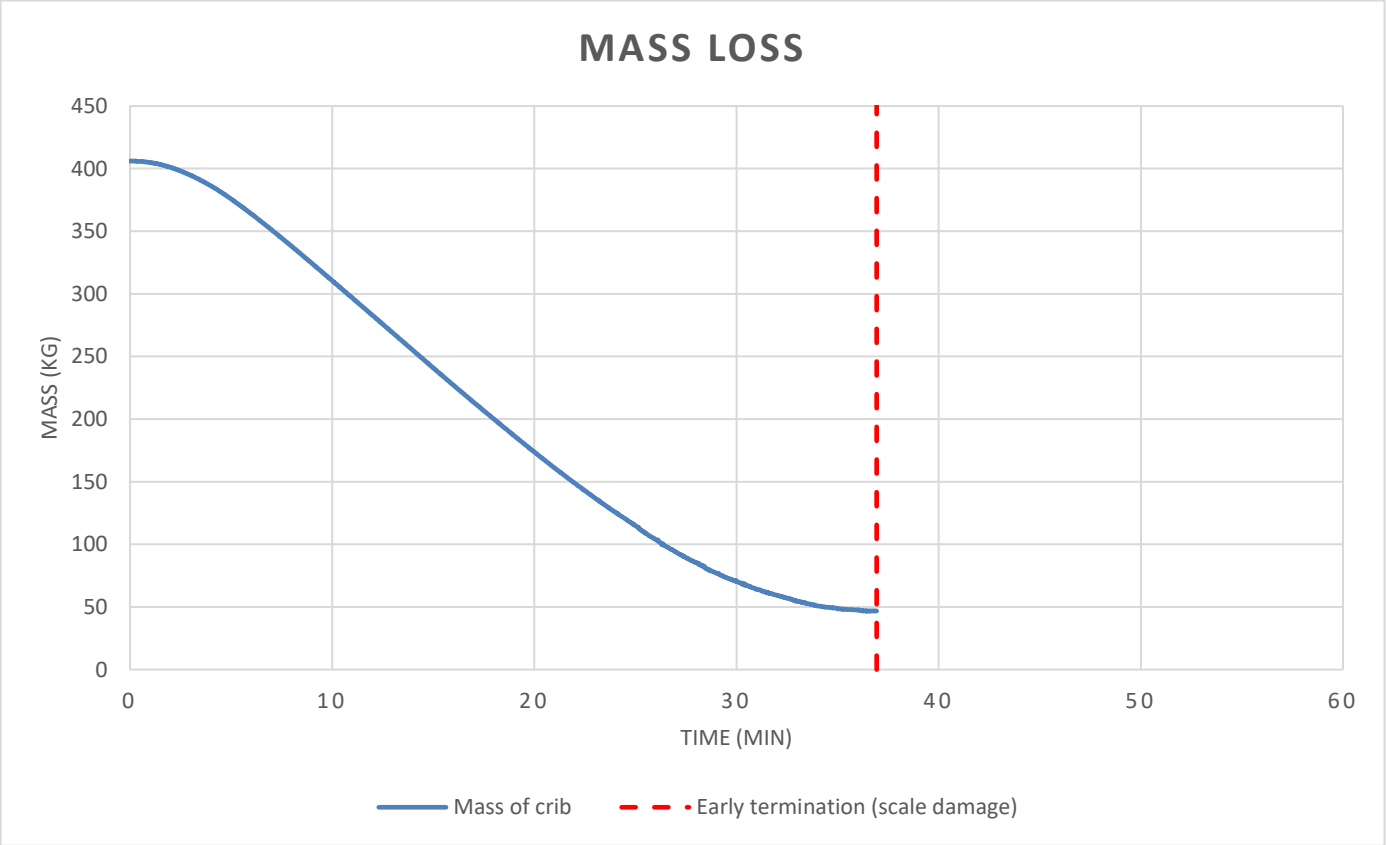

Data measurement at 1m from target crib

Layout

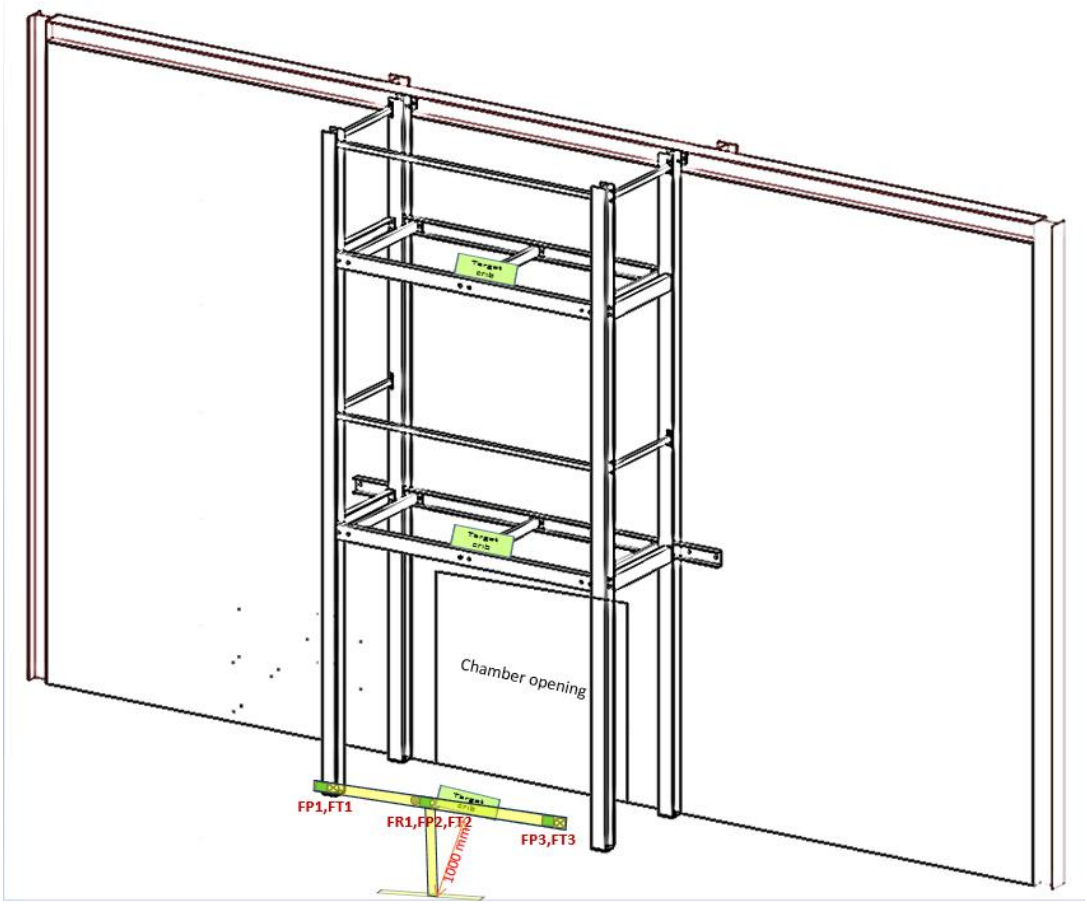

Radiant heat at 1m from target crib

The radiant heat was measured using a water cooled Gardon Guage sensor of range 100 kW/m²:

The heat flux meter was located at 1000 mm from the target crib at mid-height of the wood crib.

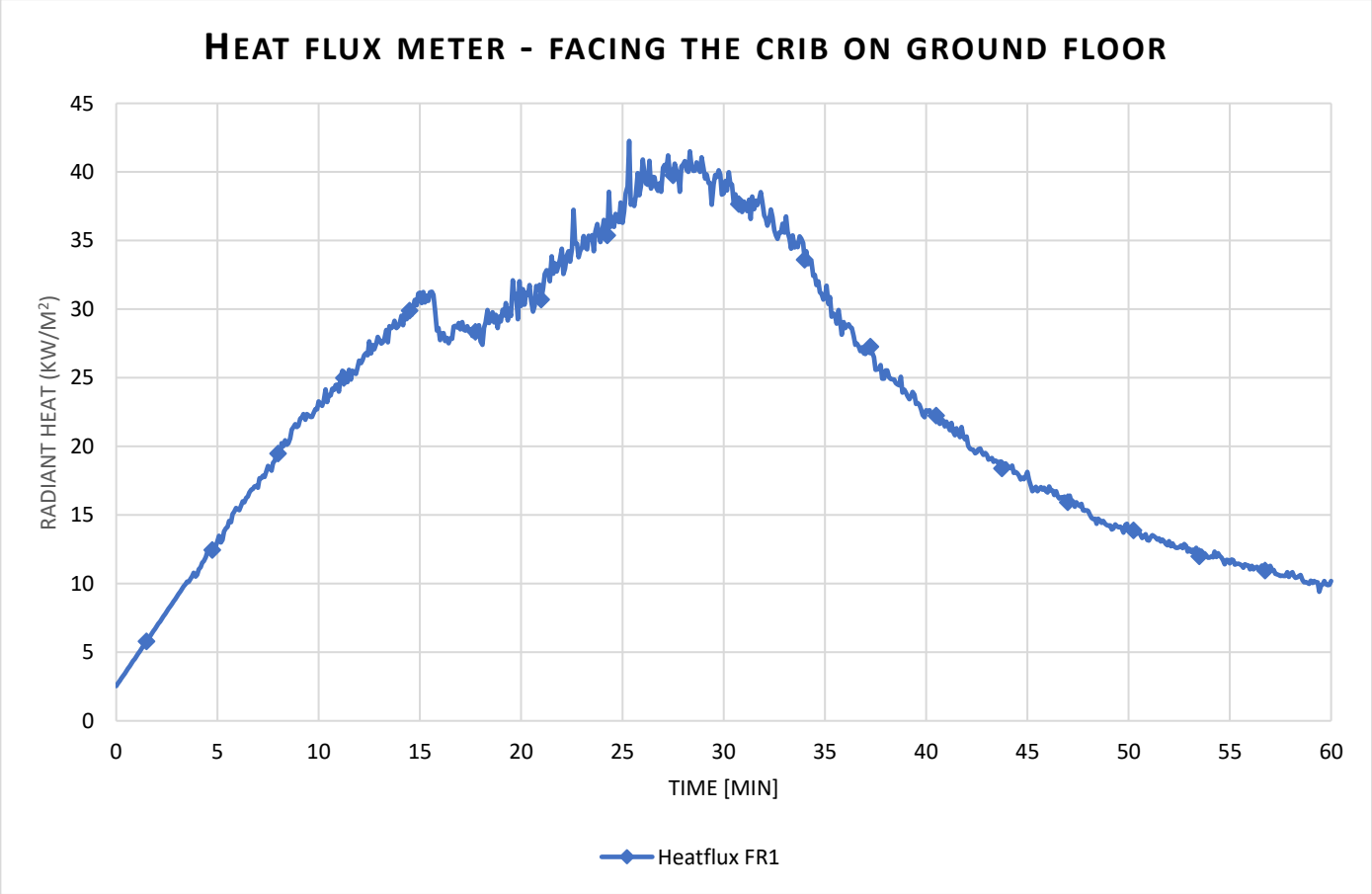

Temperature measured by plate TC's at 1m away from target crib

Ø 1.5 mm mineral insulated thermocouples were placed 1m from the target crib at mid height of wood crib spaced by 500 mm from the centre point ofthe crib. The installation included 3x Inconel thermocouple and 3x plate thermocouples.

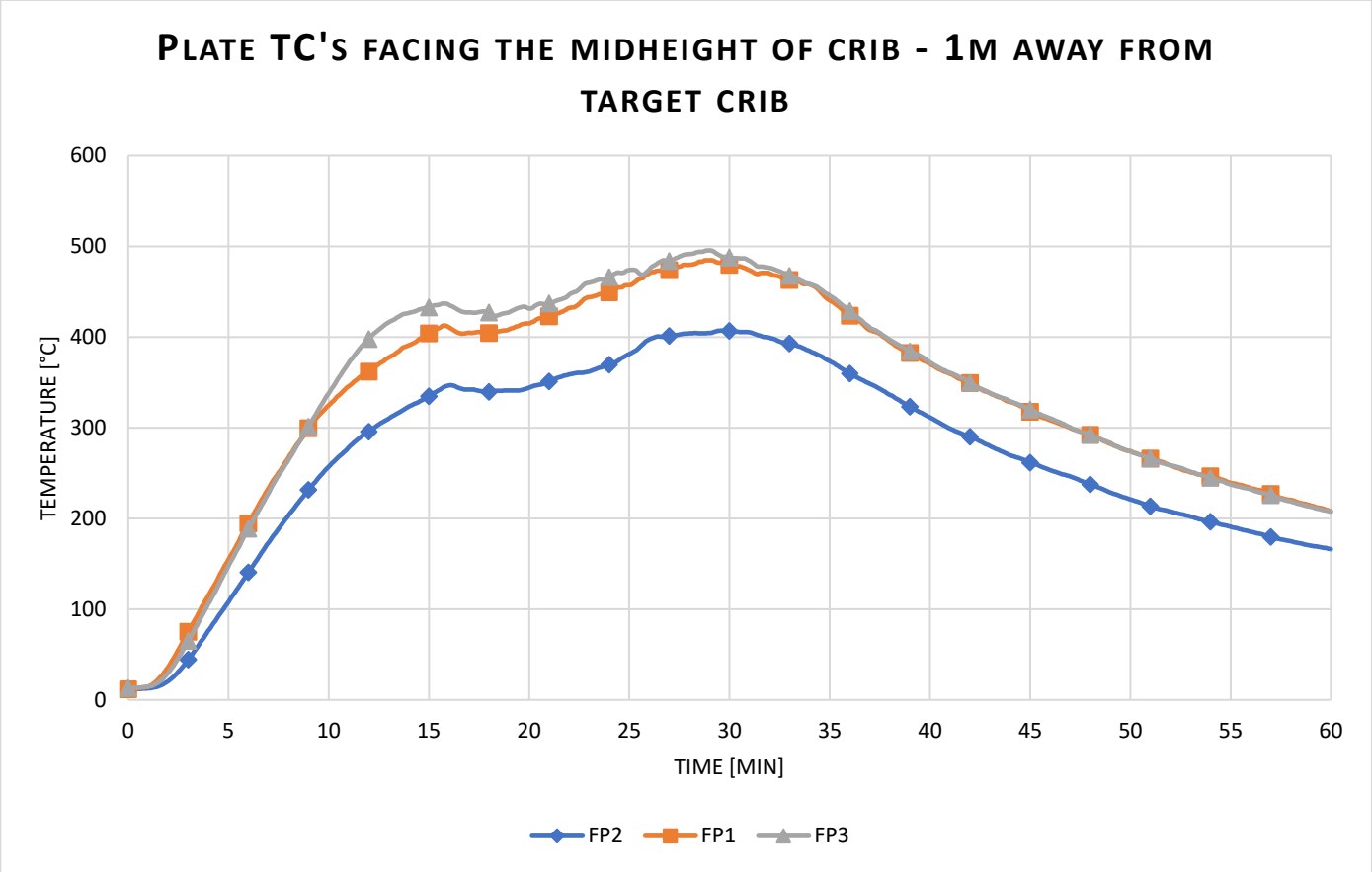

Temperature measured by Inconels at 1m away from crib

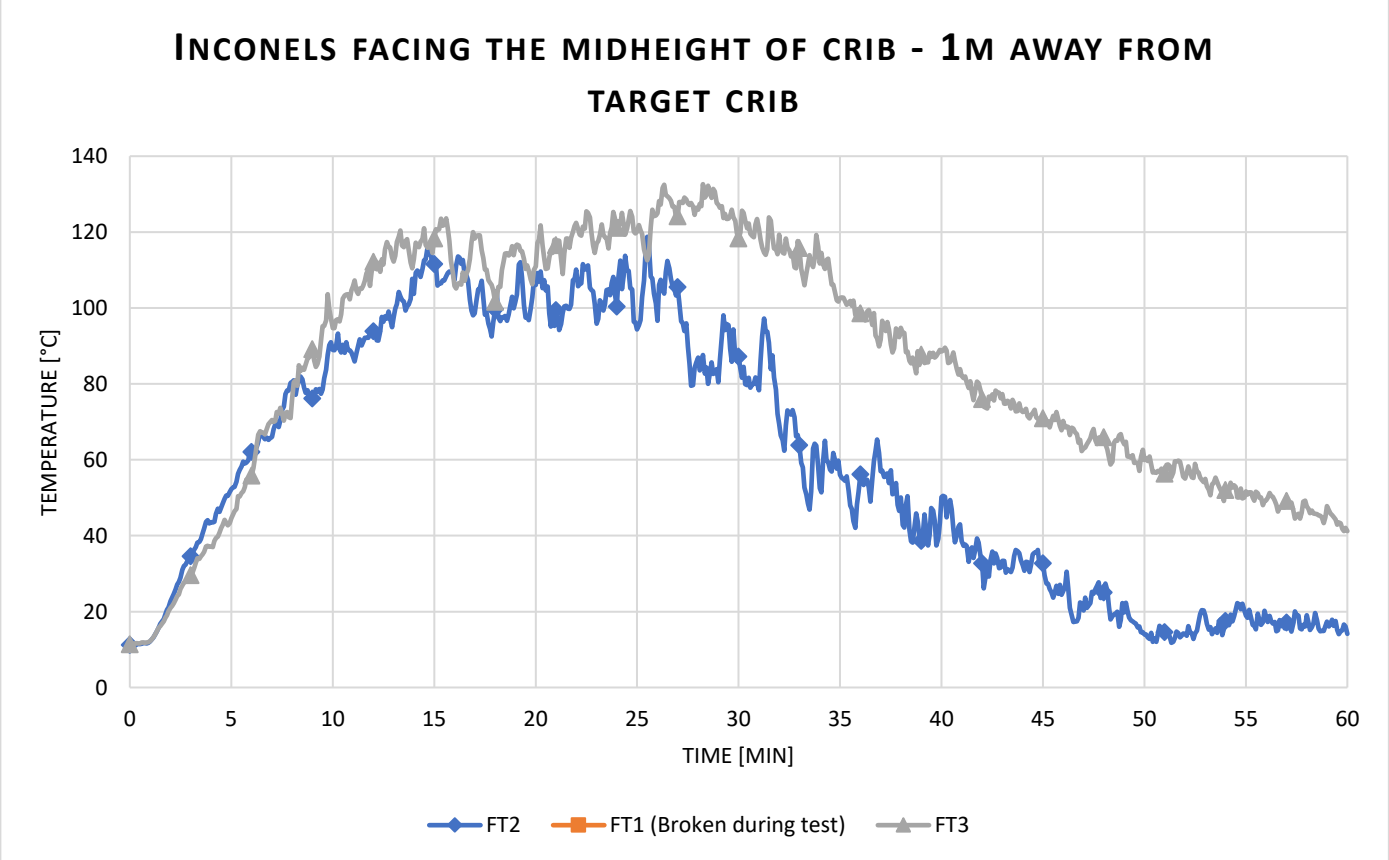

Radiant heat calculated from Plate TC

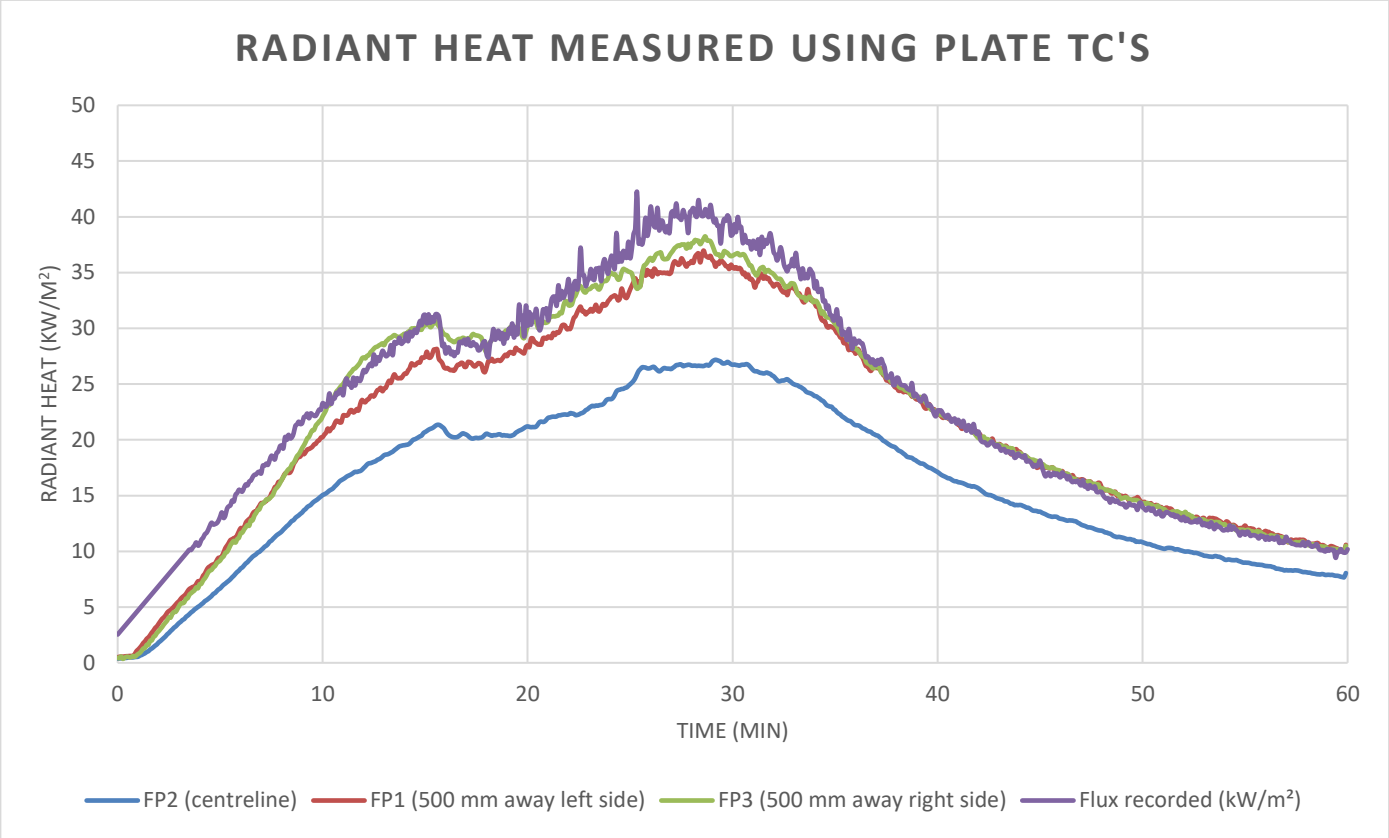

Data measurement from side edges on Ground Floor (660 mm from wall).

Layout

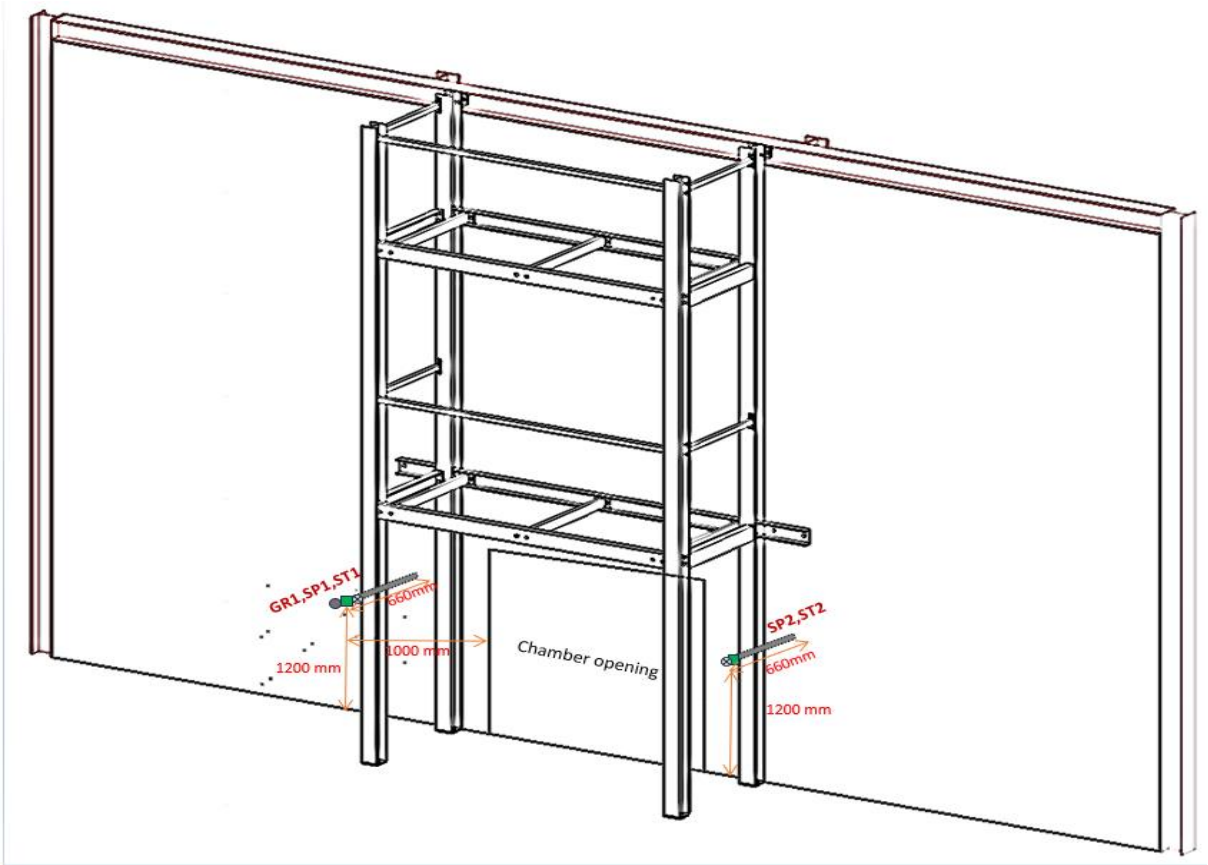

Radiant heat from the flux meter on side edge (660 mm from wall)

The radiant heat was measured using a water cooled Gardon Guage sensor of range 100 kW/m²:

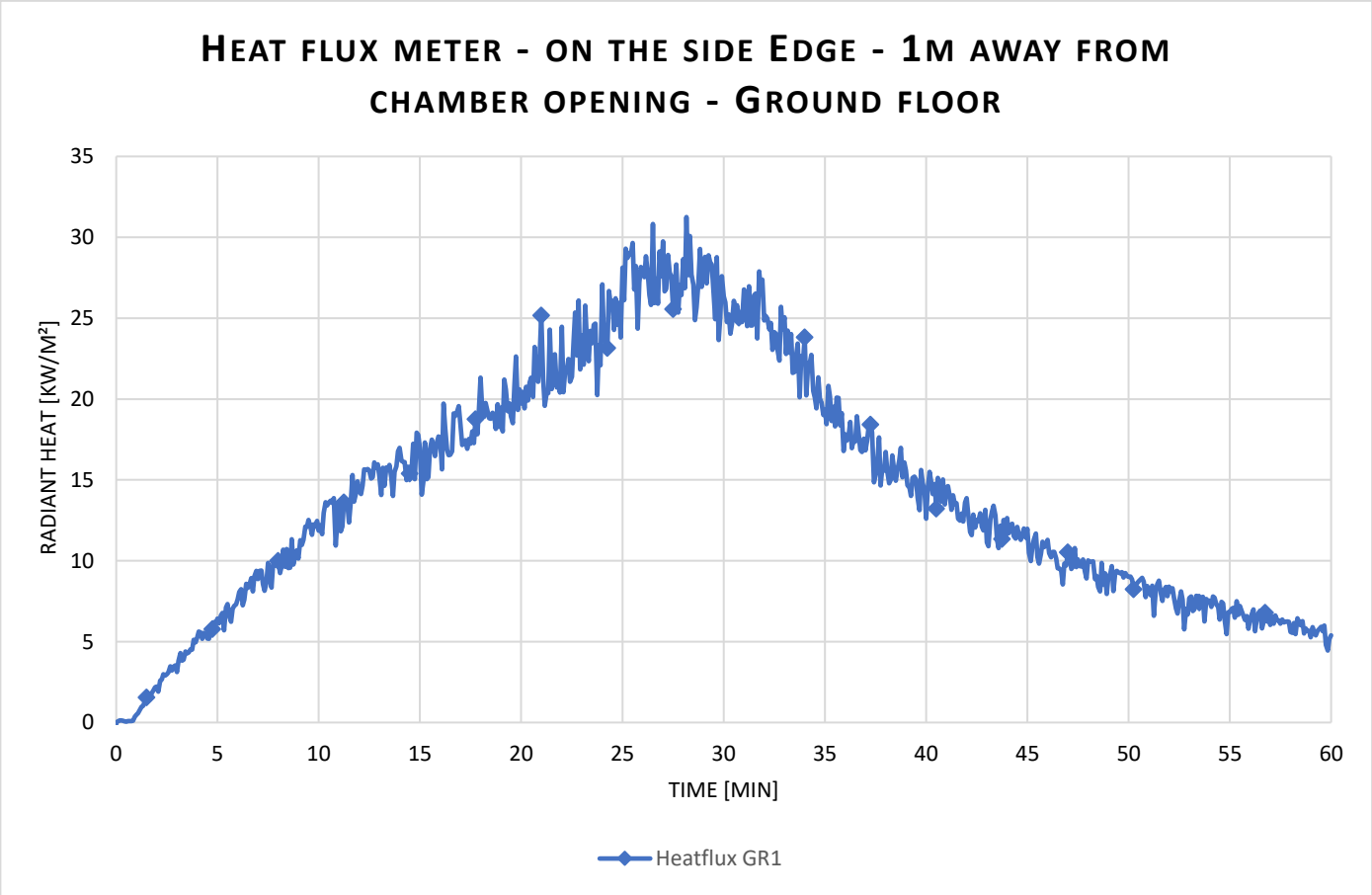

Temperature measured using plate TC's on the side edge

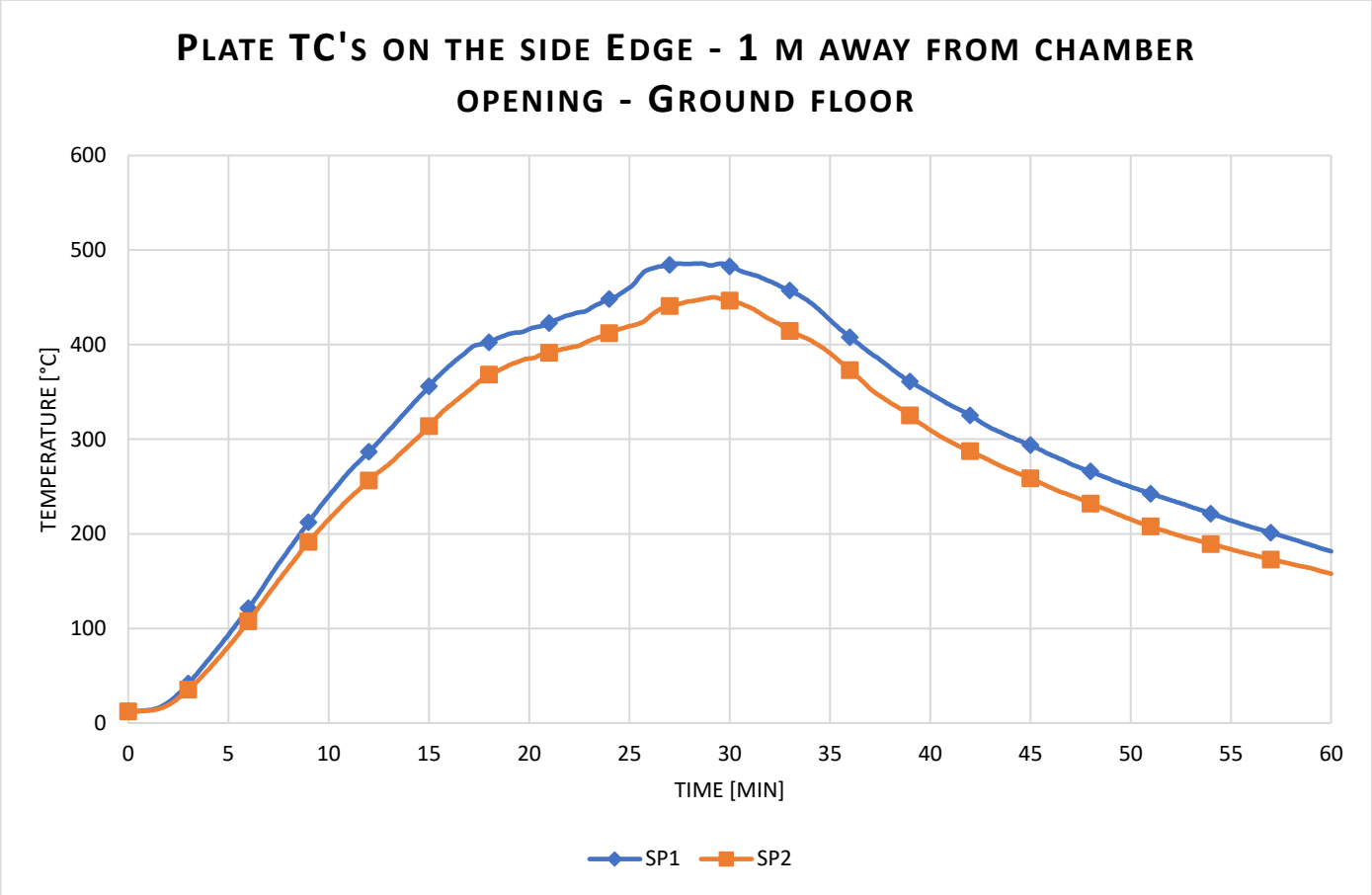

Temperature measured using Inconels on the side edge

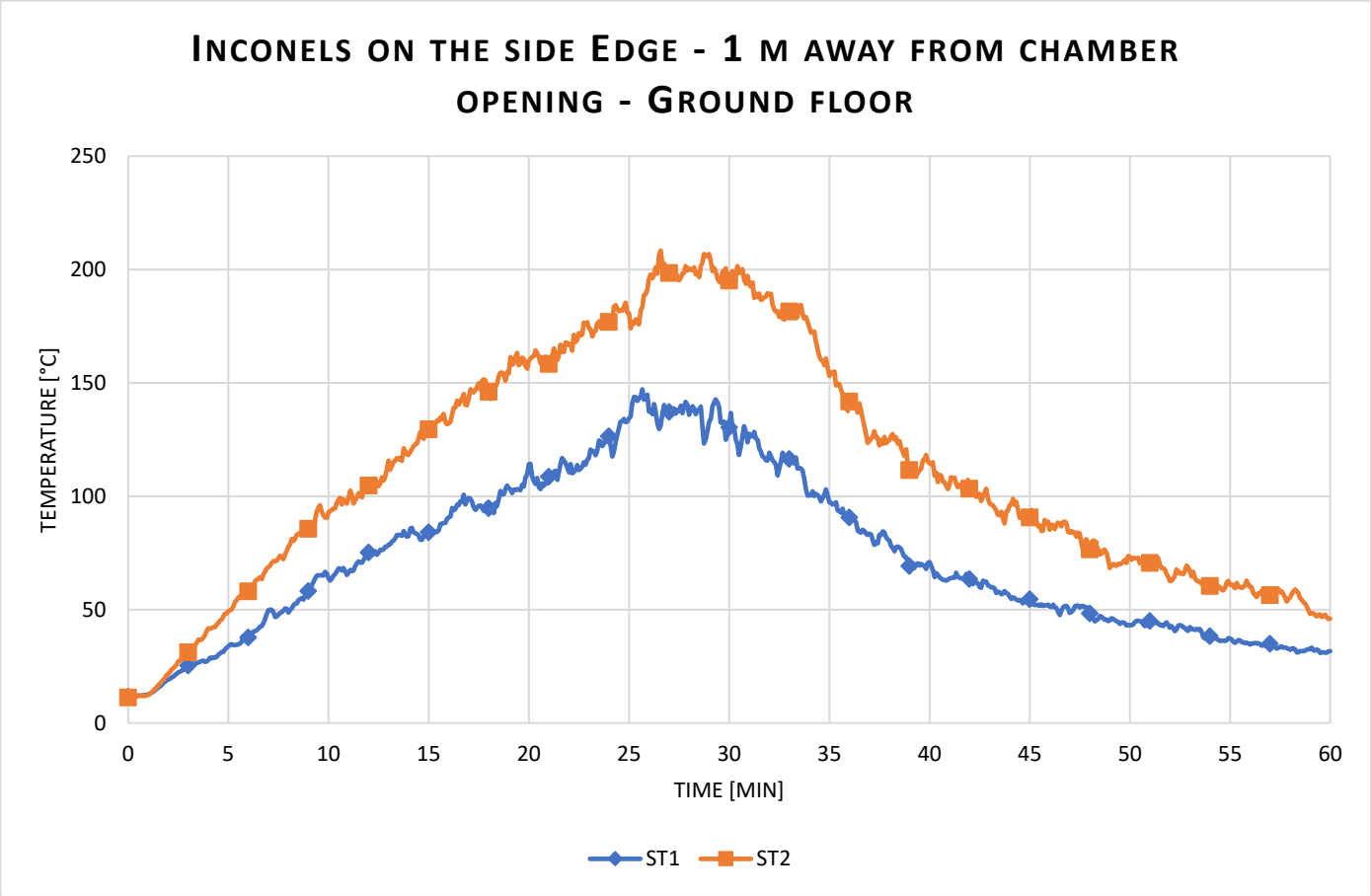

Radiant heat calculated from Plate TC

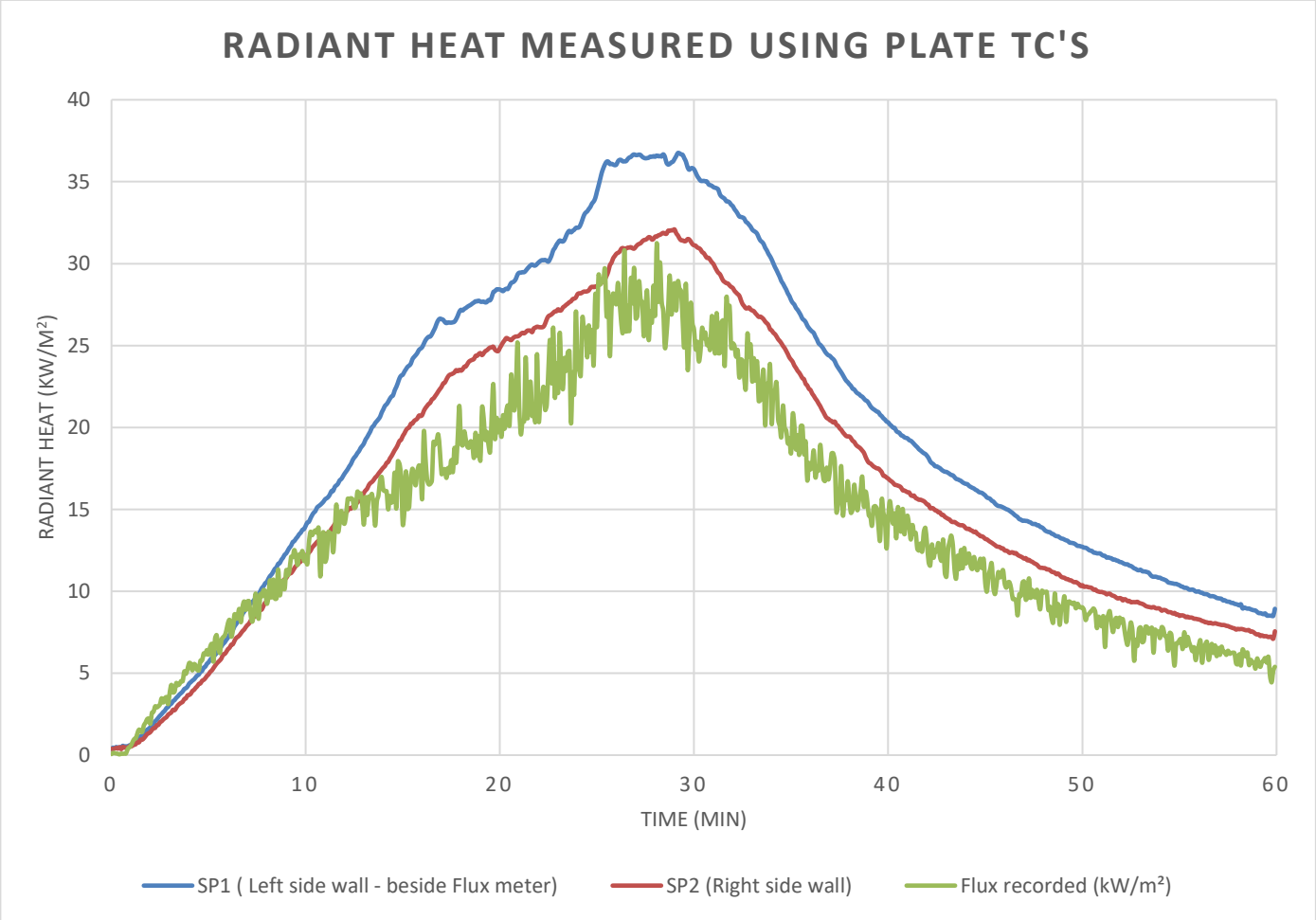

Data measurement from side edges on 1st Floor (660 mm from wall).

Layout

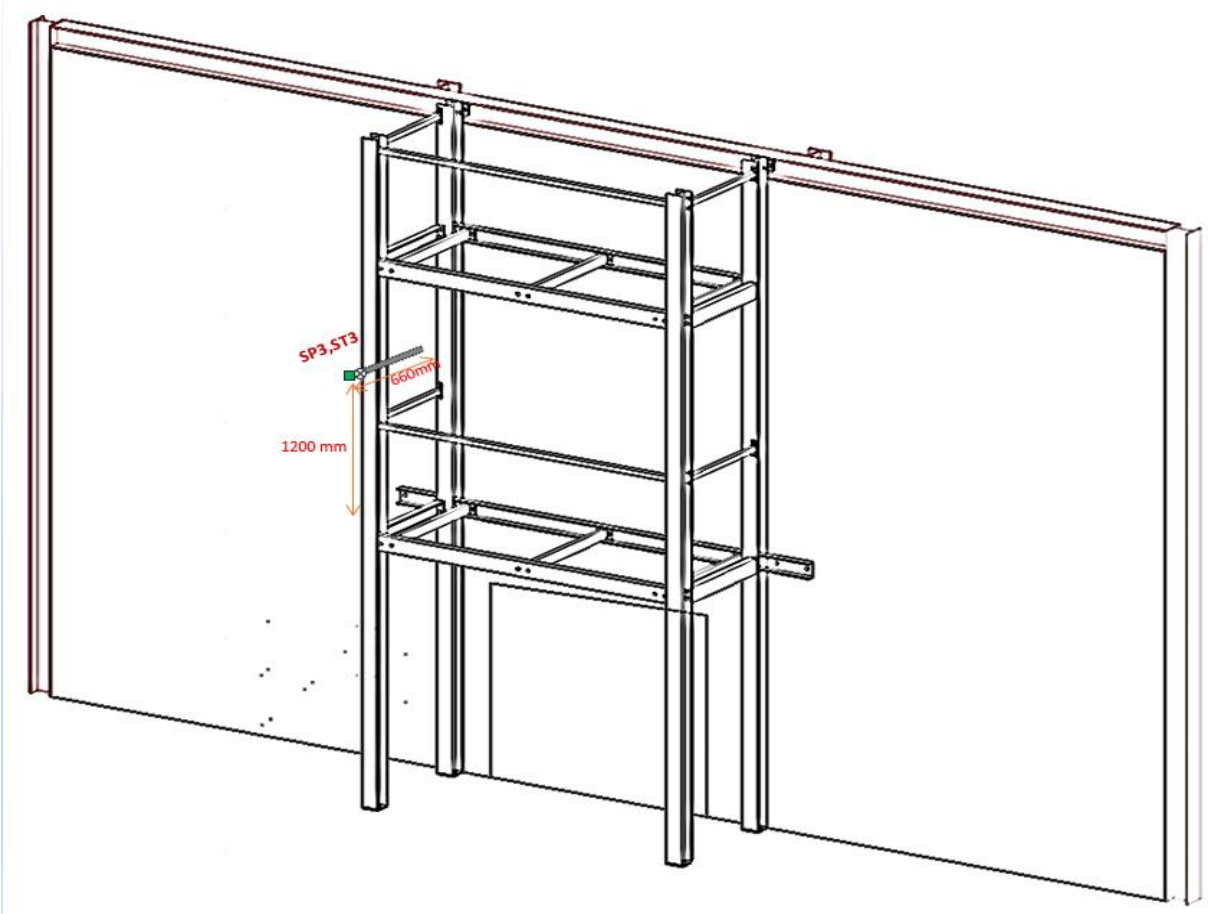

Temperature measured using plate TC on the side edge – 1st floor

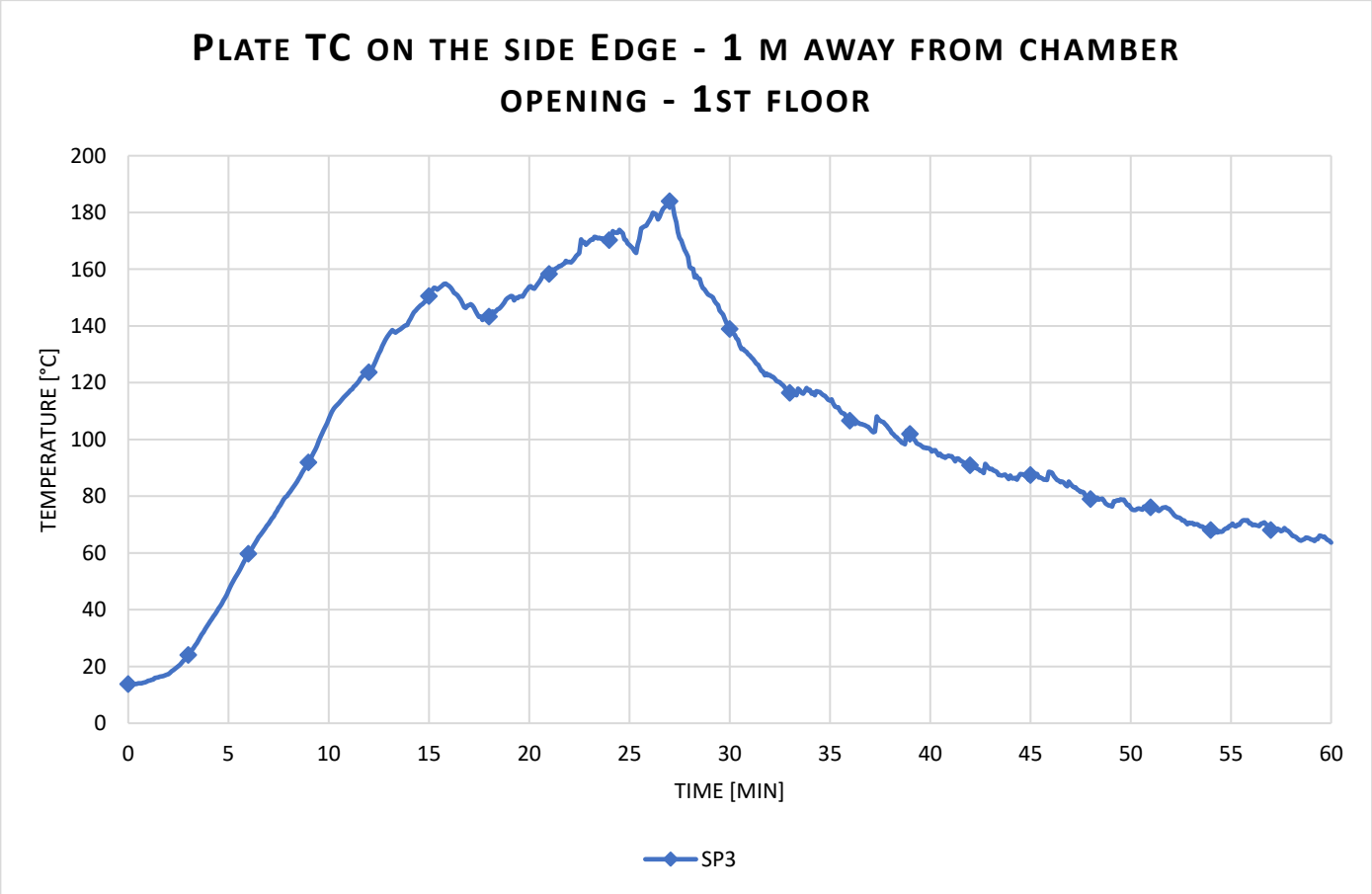

Temperature measured using Inconel on the side edge – 1st floor

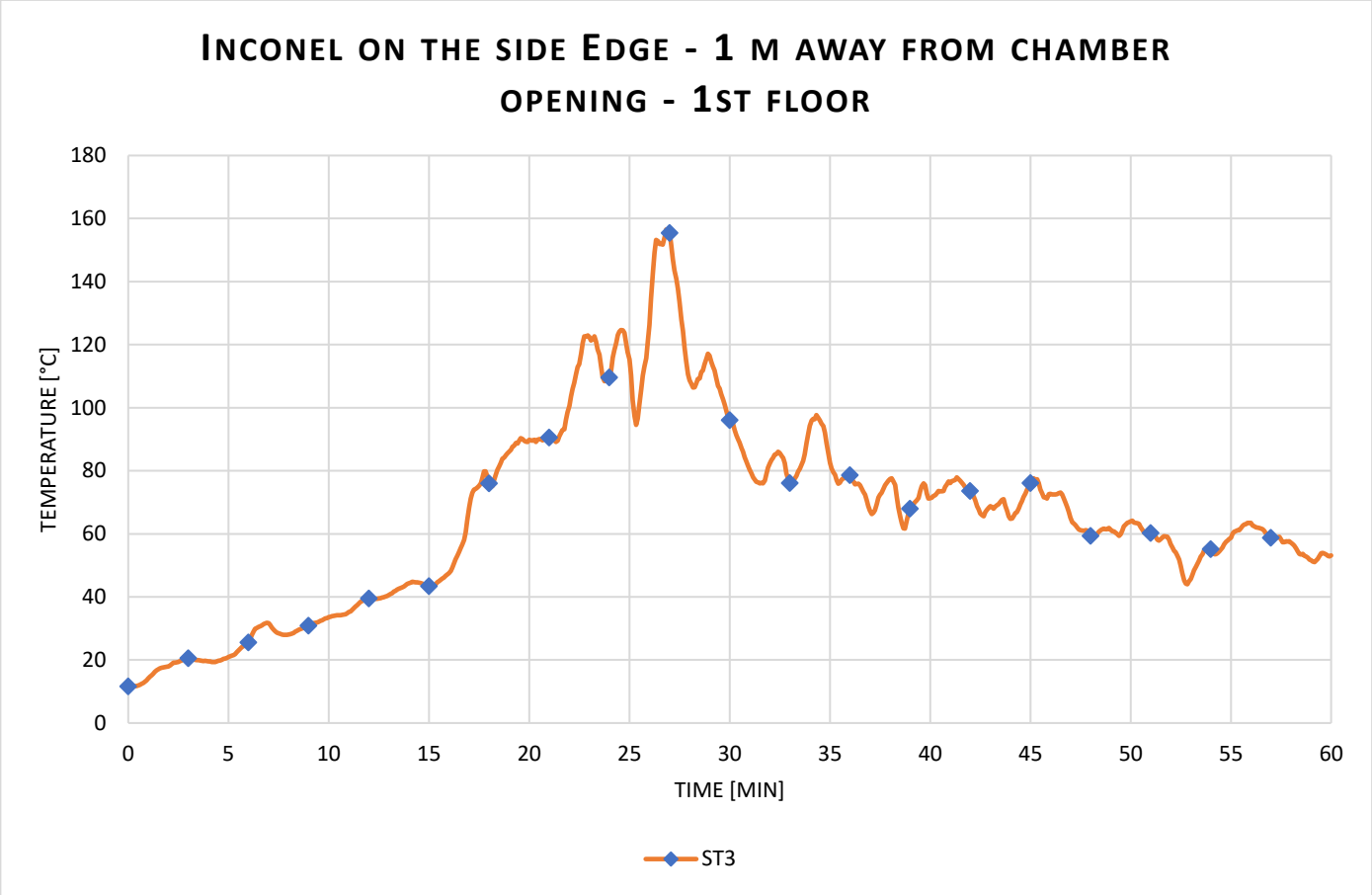

Radiant heat calculated from Plate TC

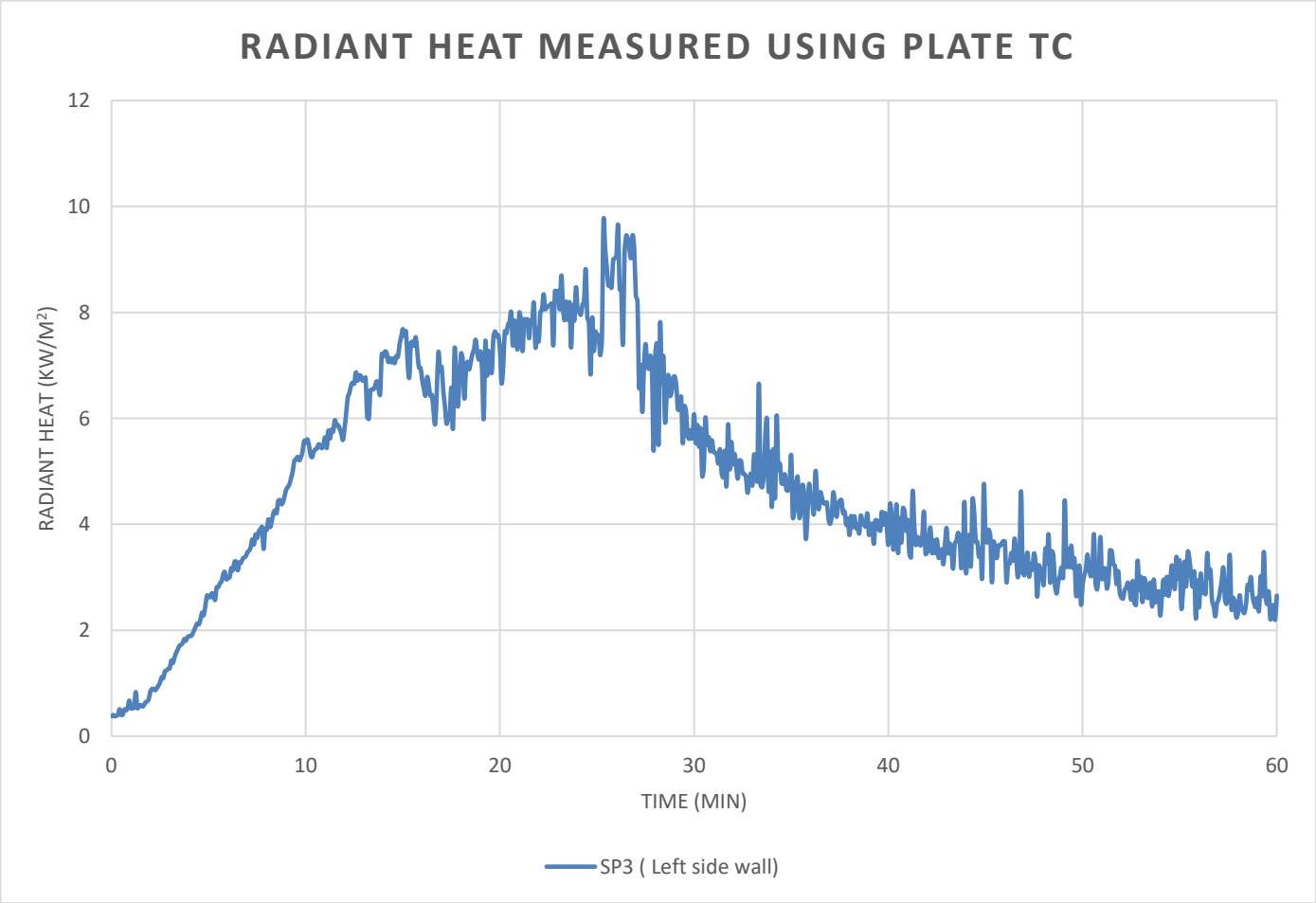

Data measurement from side edges on 2nd Floor (660 mm from wall).

Layout

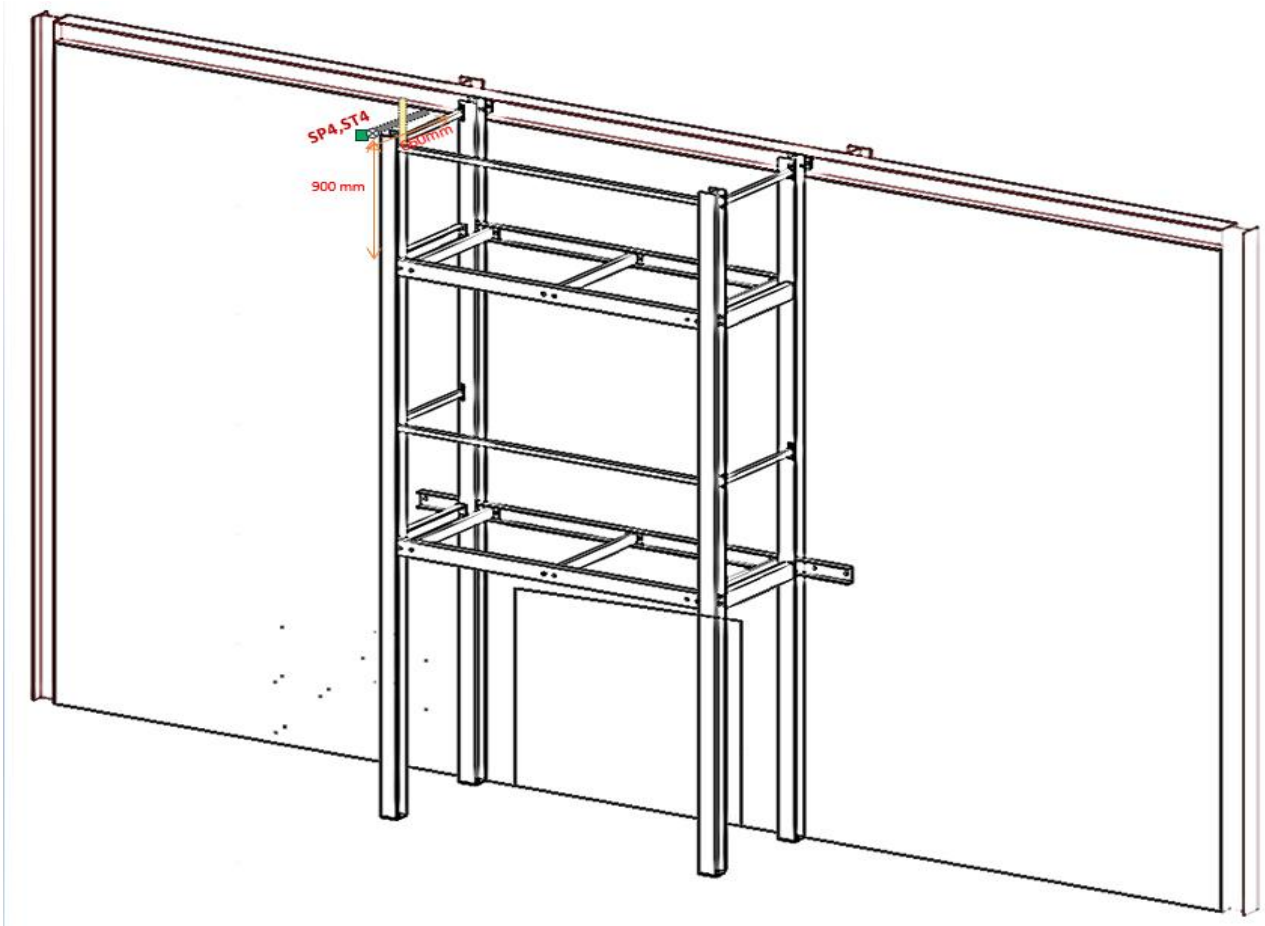

Temperature measured using plate TC's on the side edge – 2nd floor

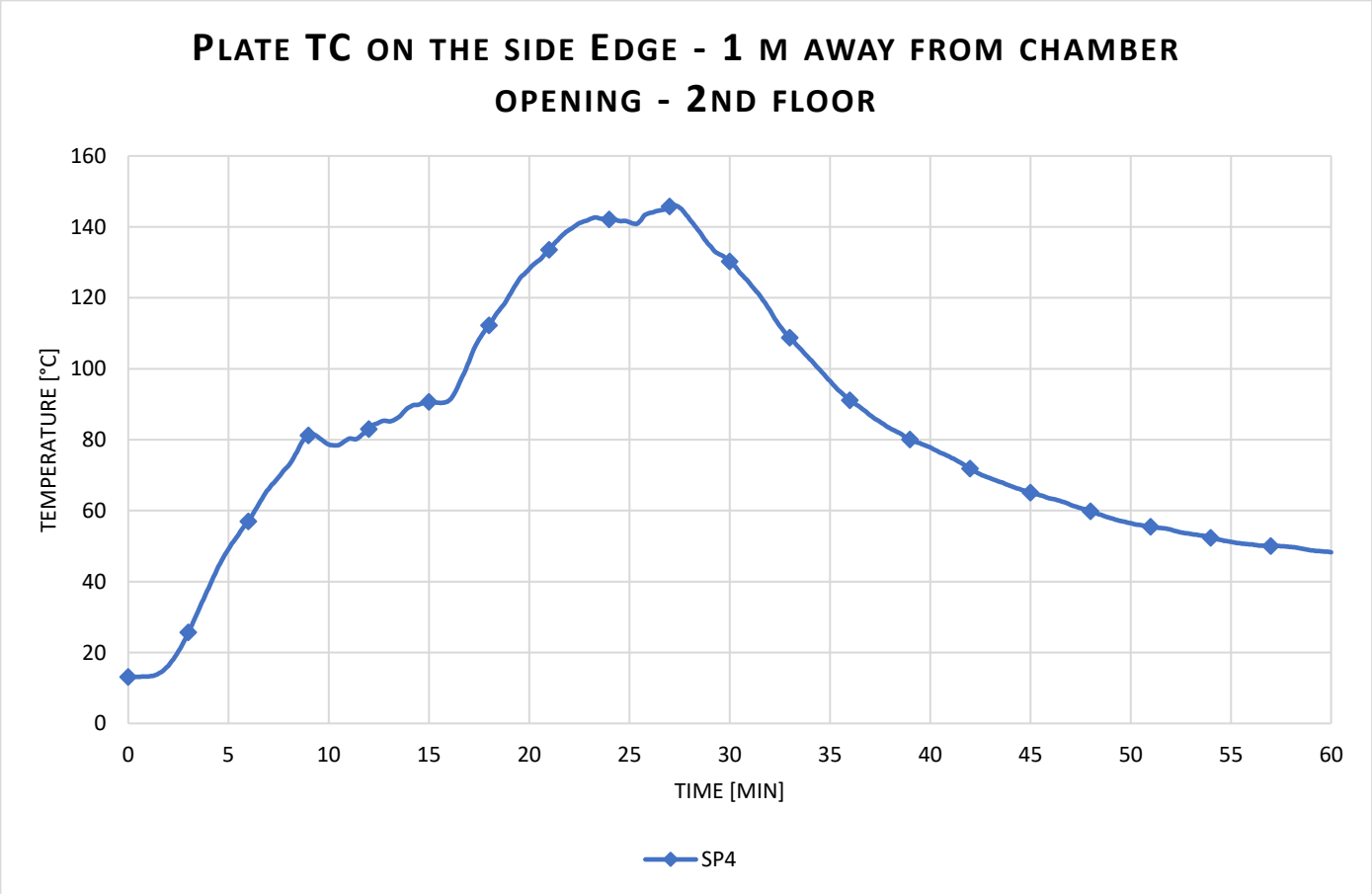

Temperature measured using Inconels on the side edge – 2nd floor

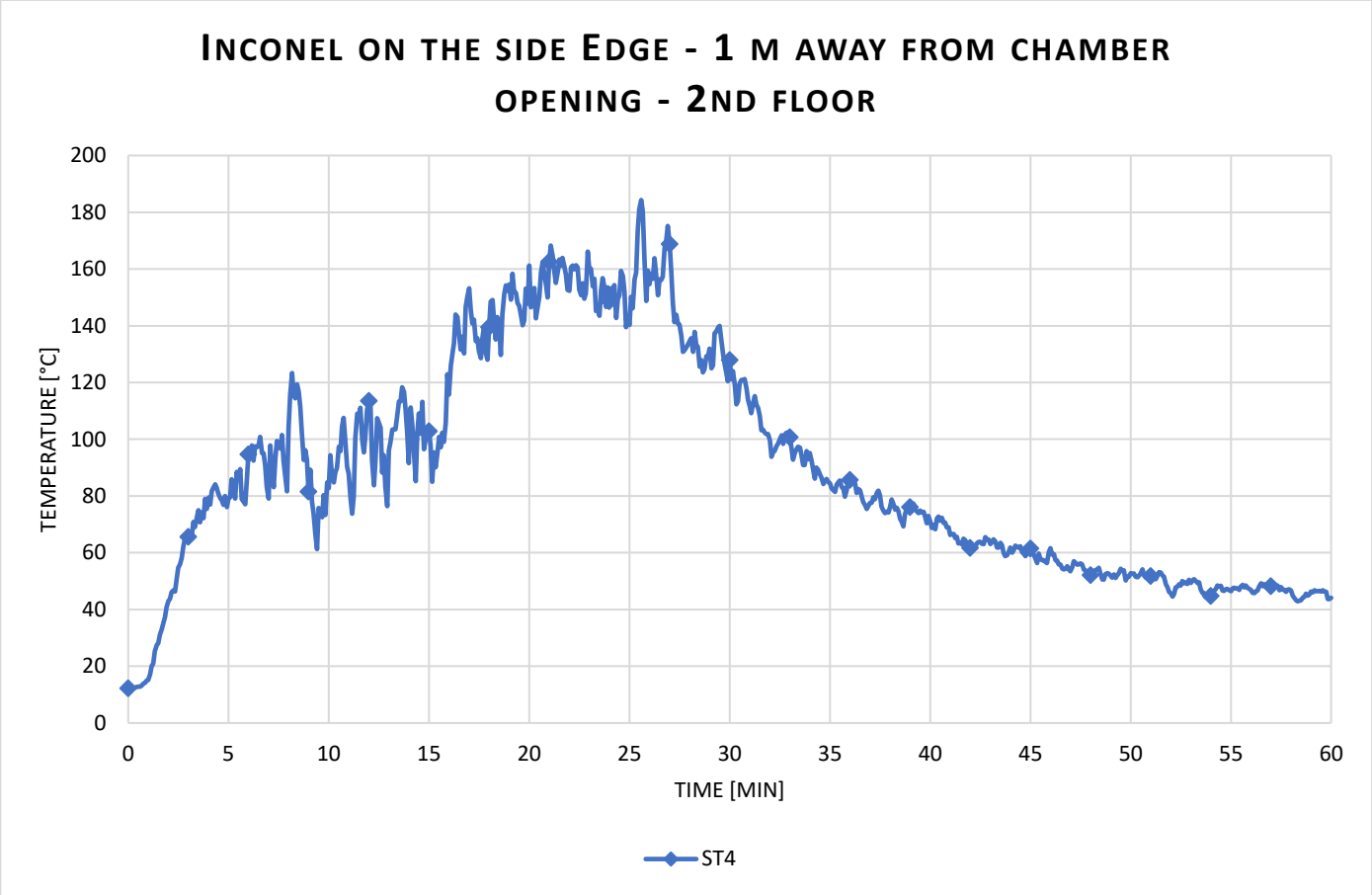

Radiant heat calculated from Plate TC

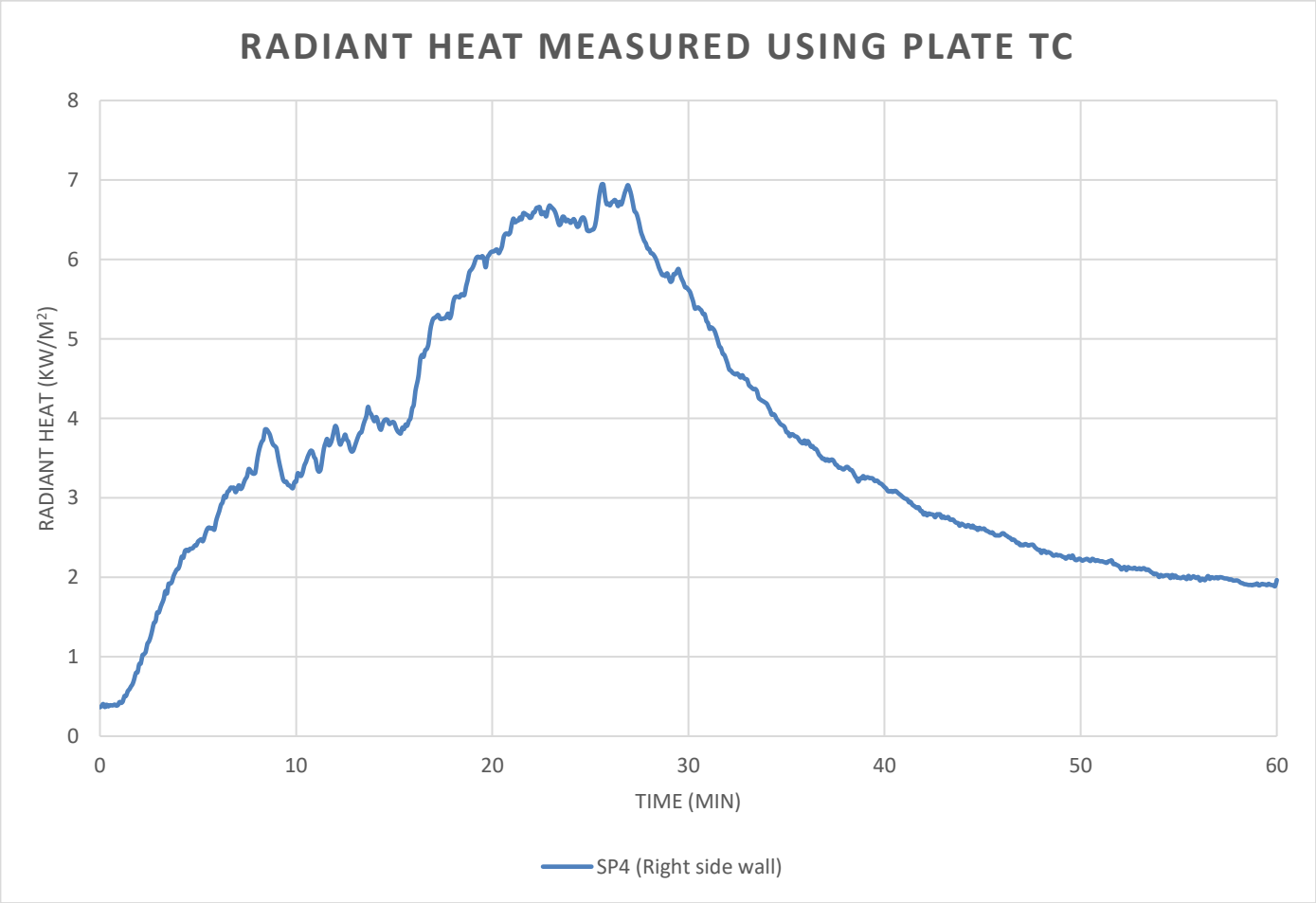

Data measurement from 1st floor wall.

Layout

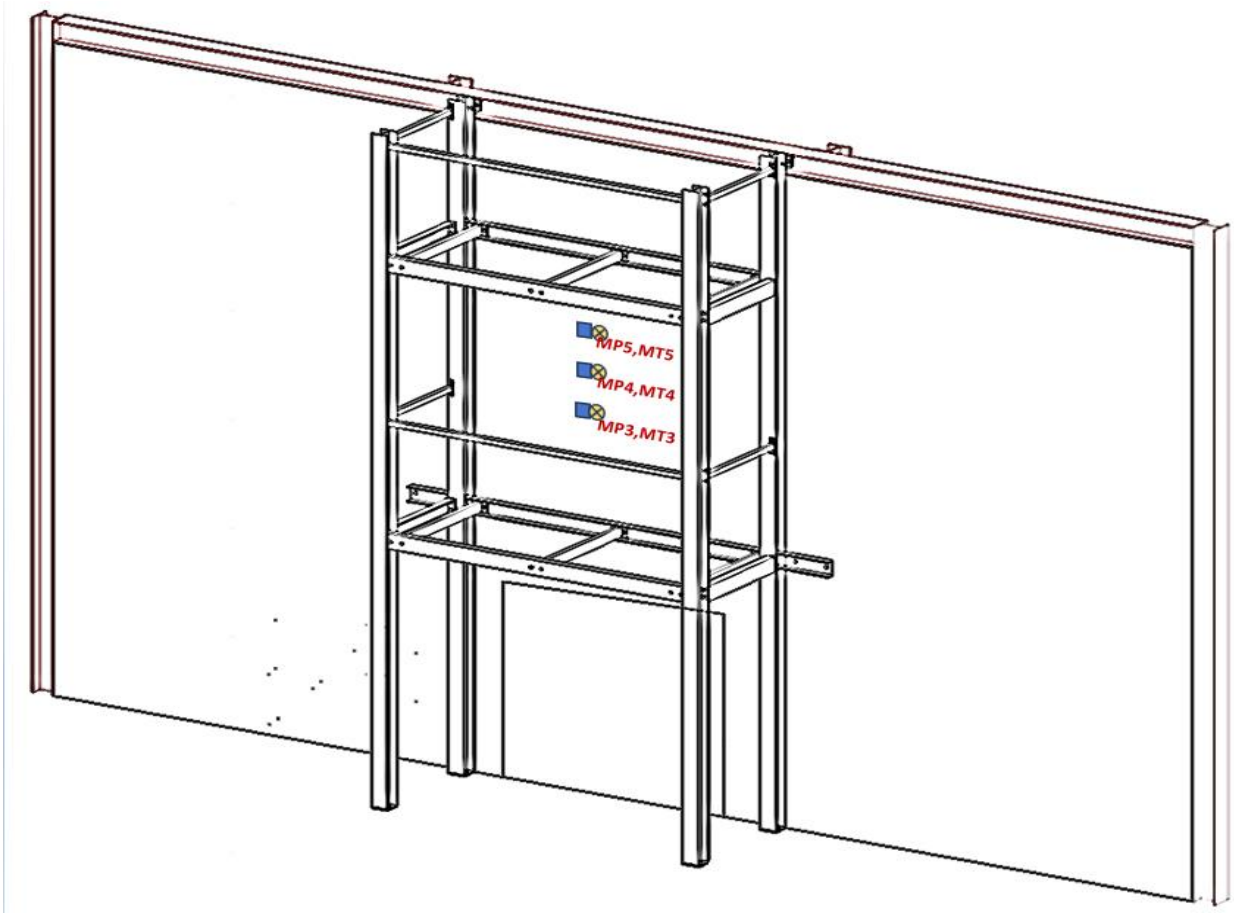

Temperature measured from the Plate TC's on wall at 1st floor

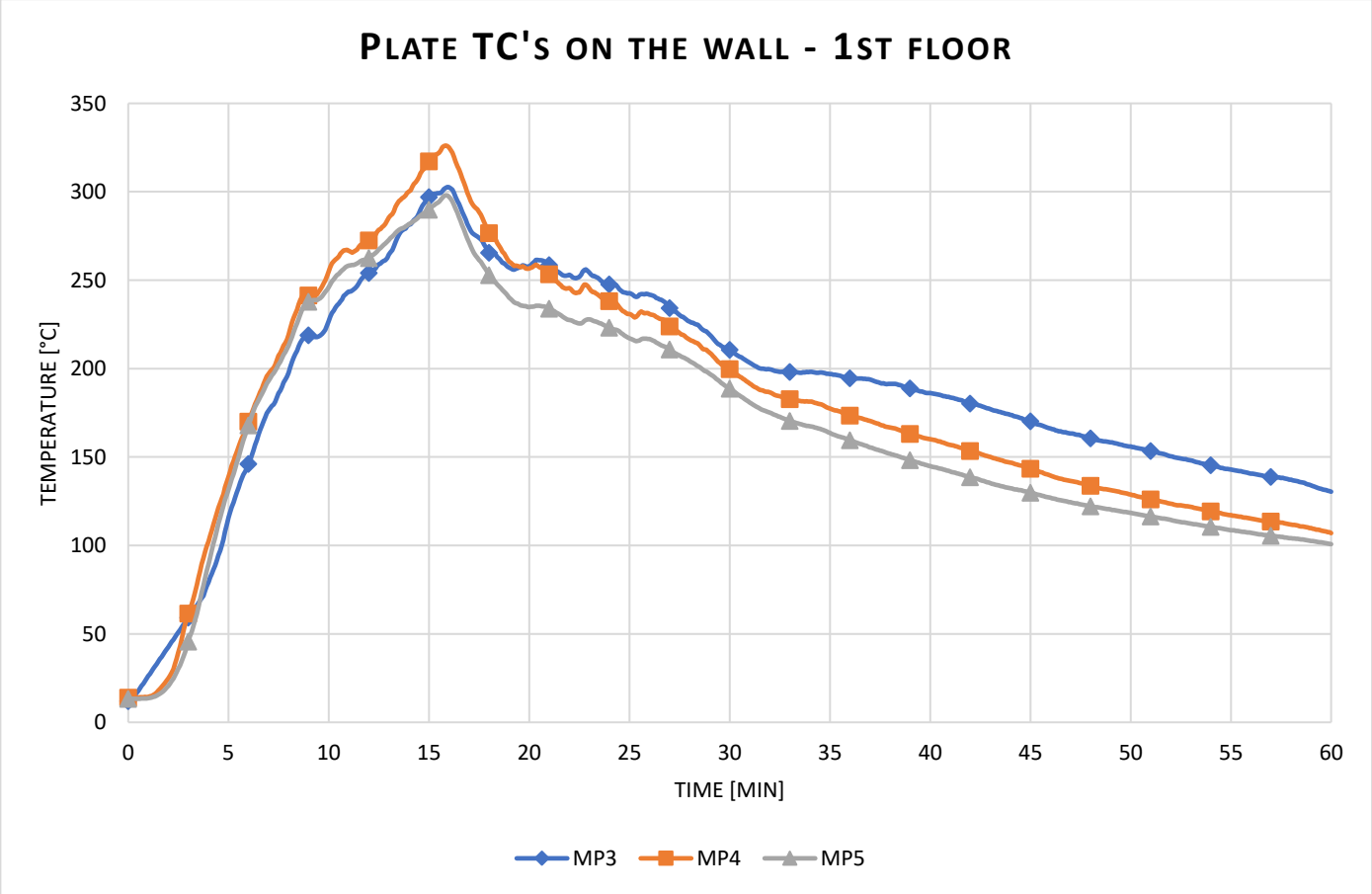

Temperature measured from the Inconels on wall at 1st floor

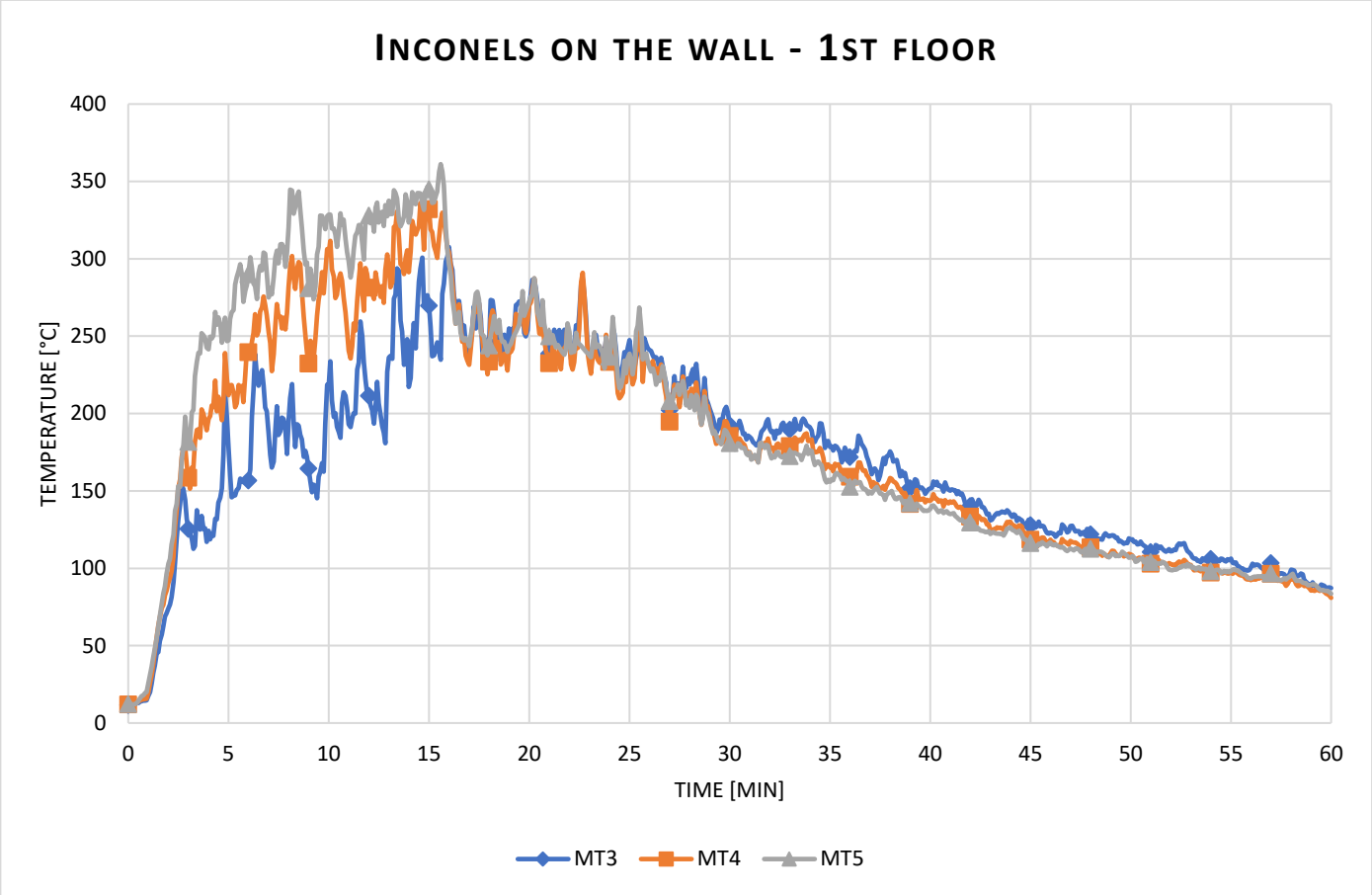

Radiant heat calculated from Plate TC

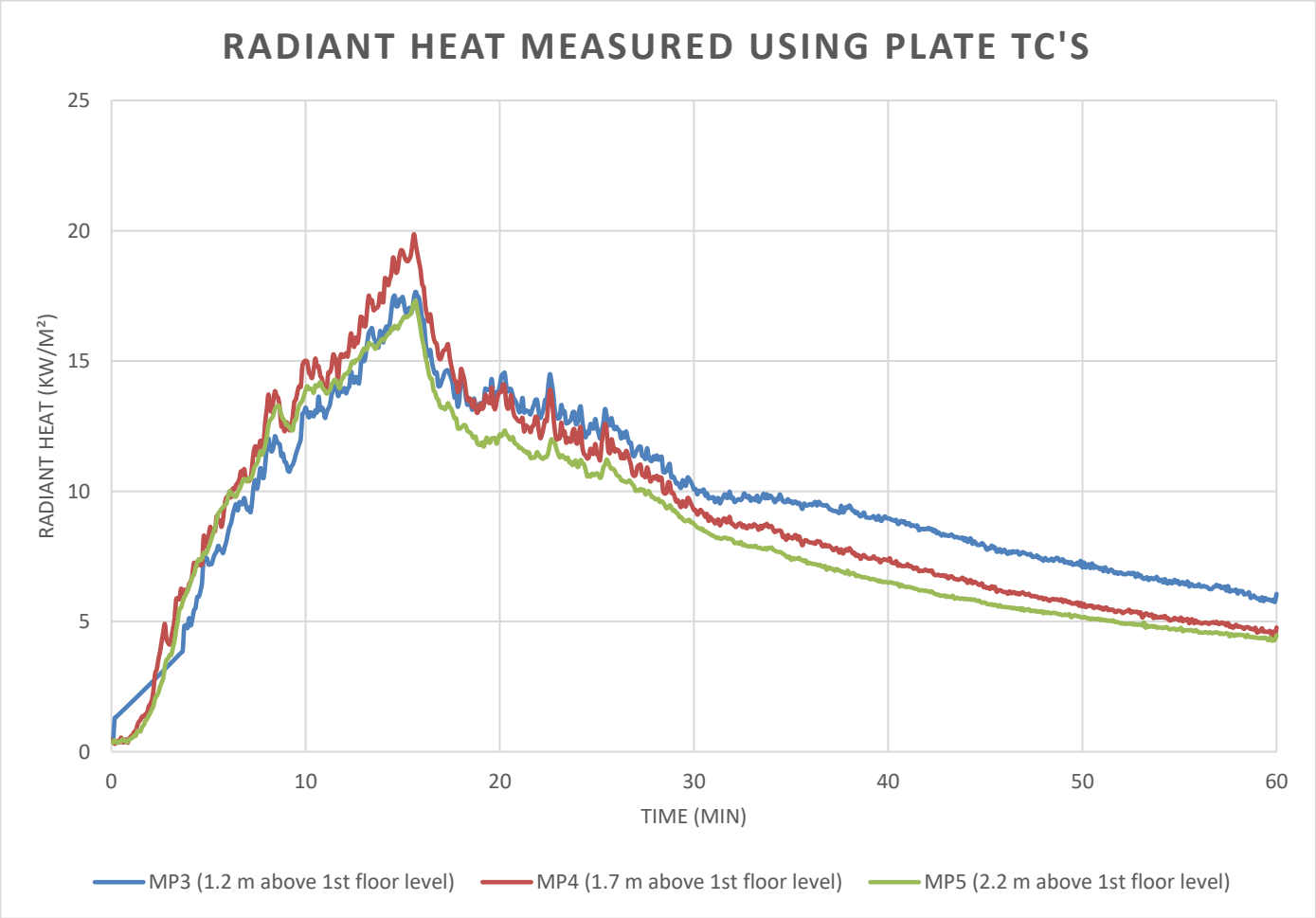

Data measurement from 2nd floor wall.

Layout

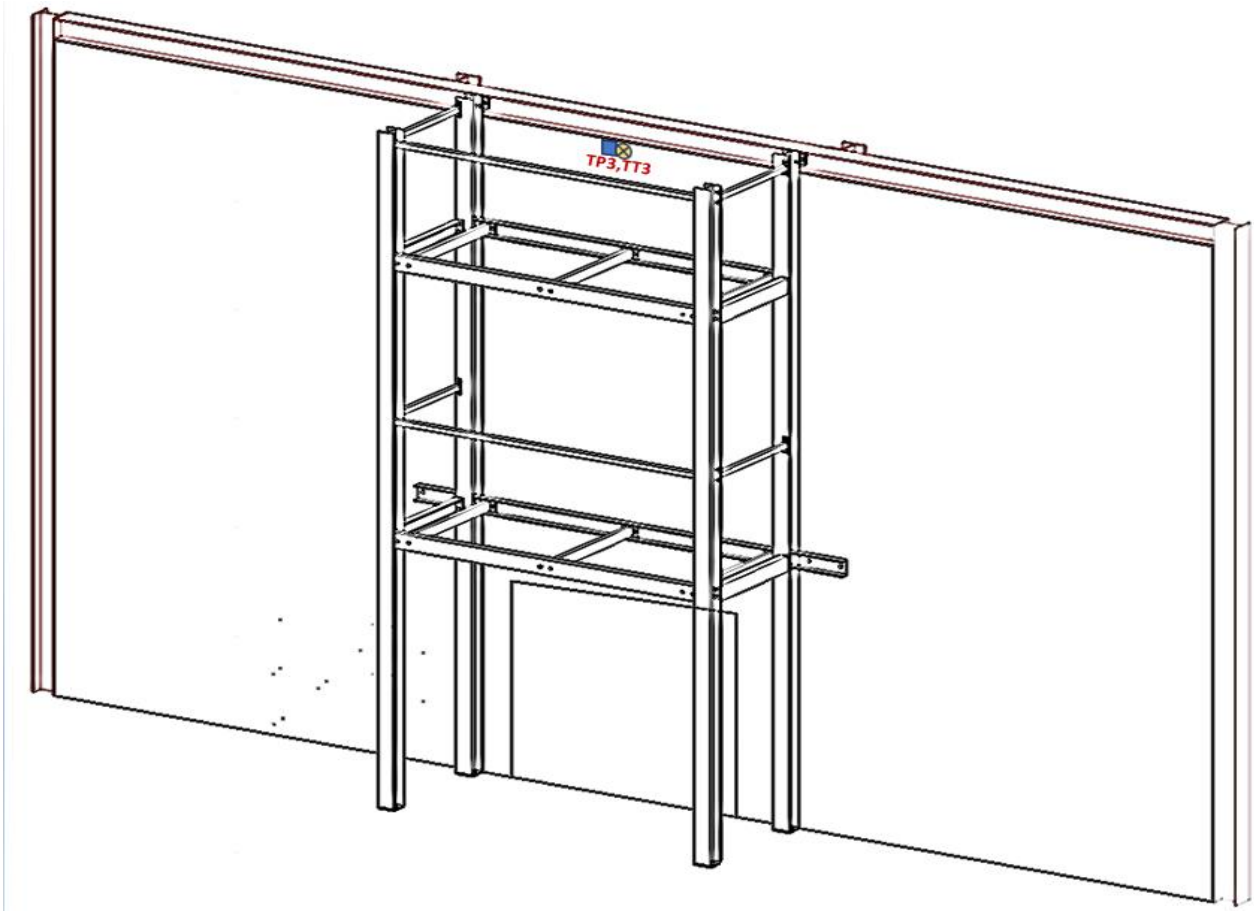

Temperature measured from Plate TC on the wall at 2nd floor

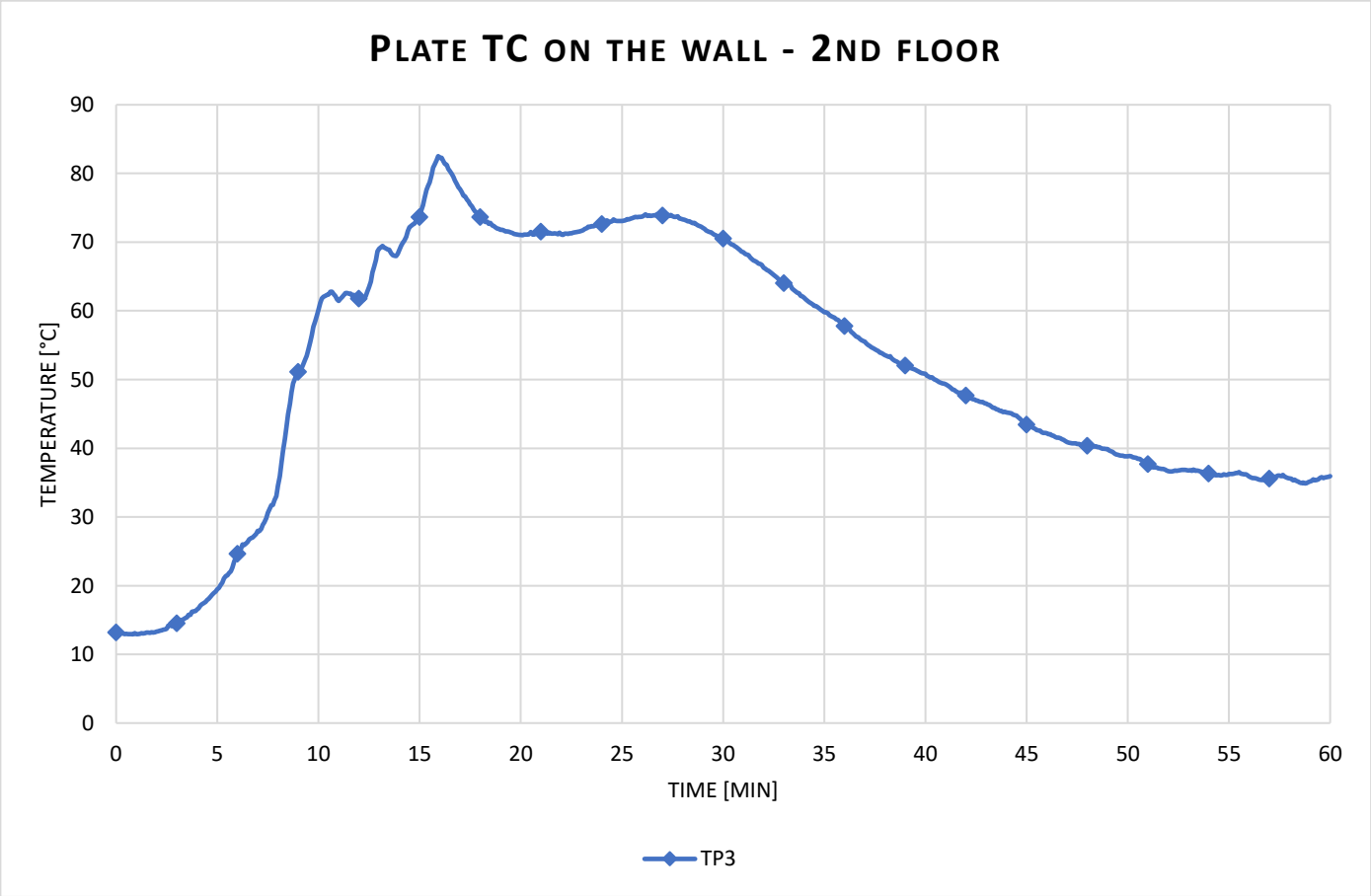

Temperature measured from Inconel on the wall at 2nd floor

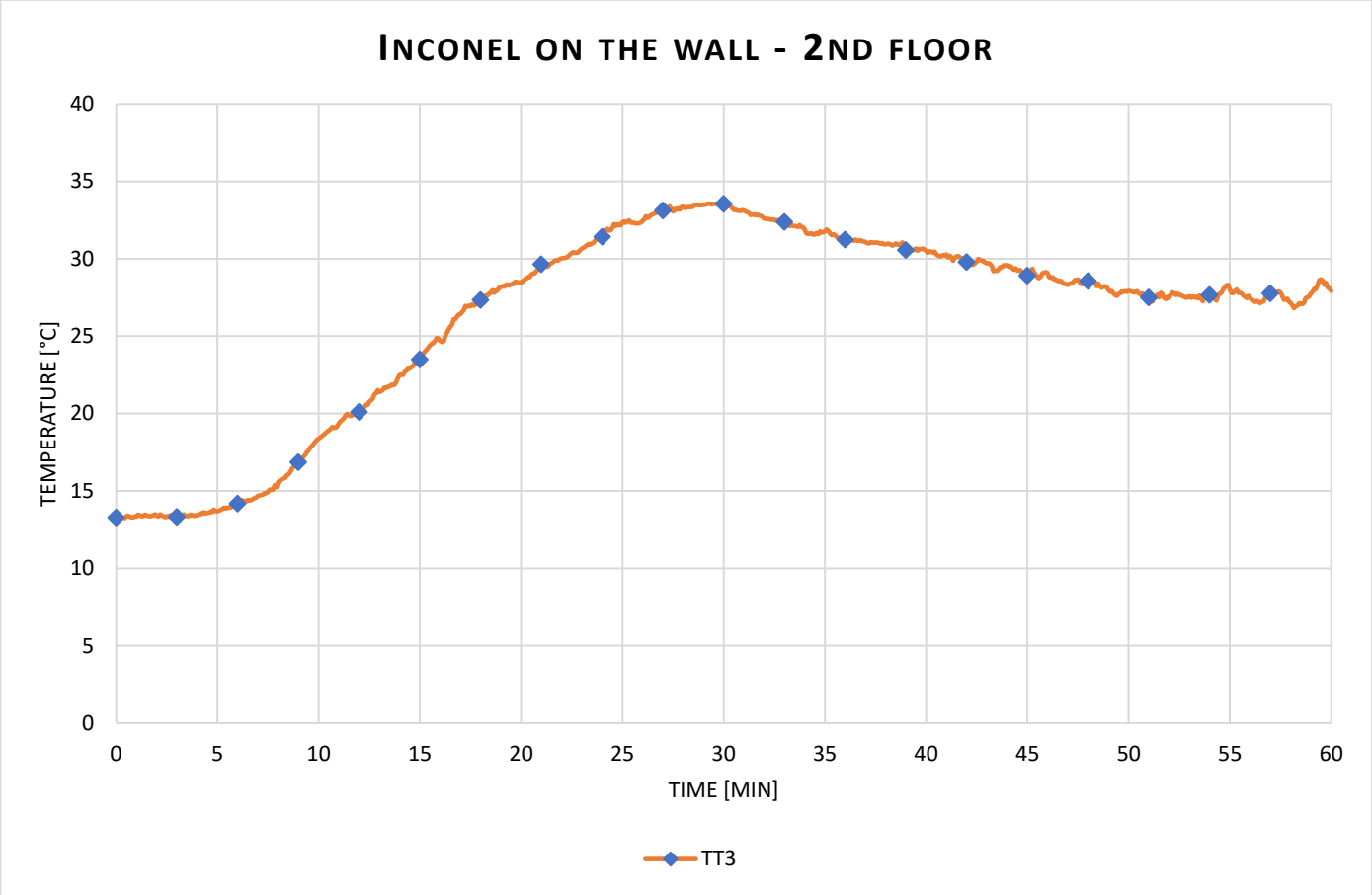

Radiant heat calculated from Plate TC

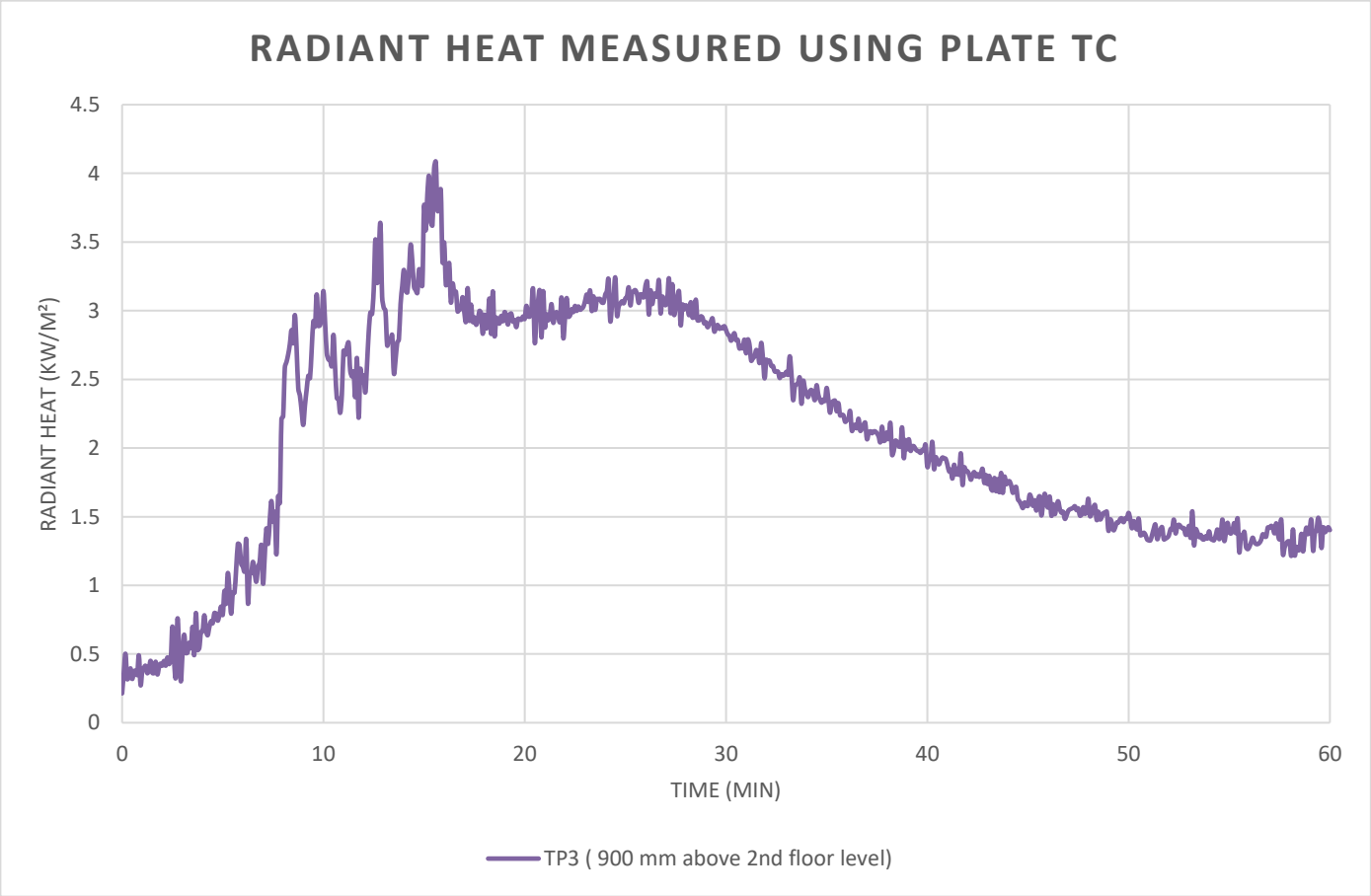

Data measurement from 1st floor exposed edge.

Layout

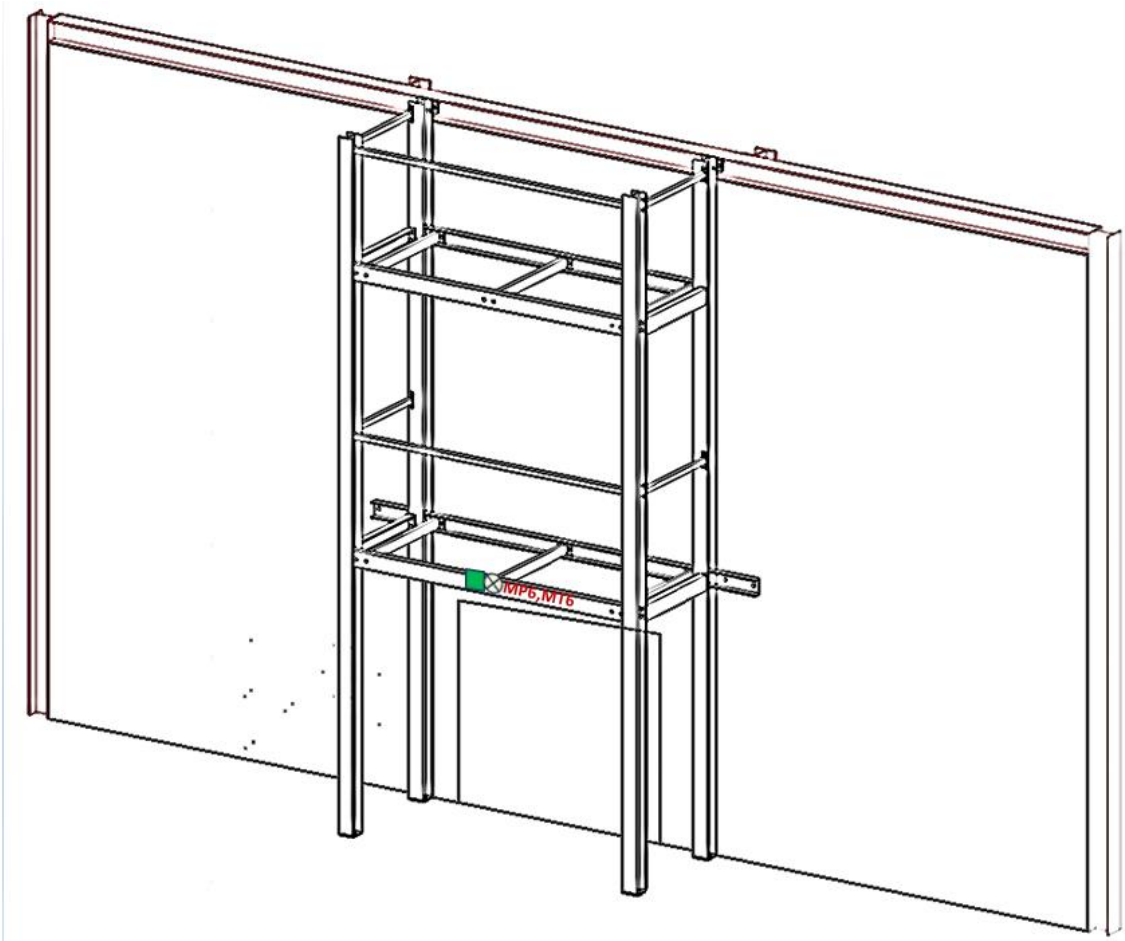

Temperature measured using plate TC 1st floor exposed edge

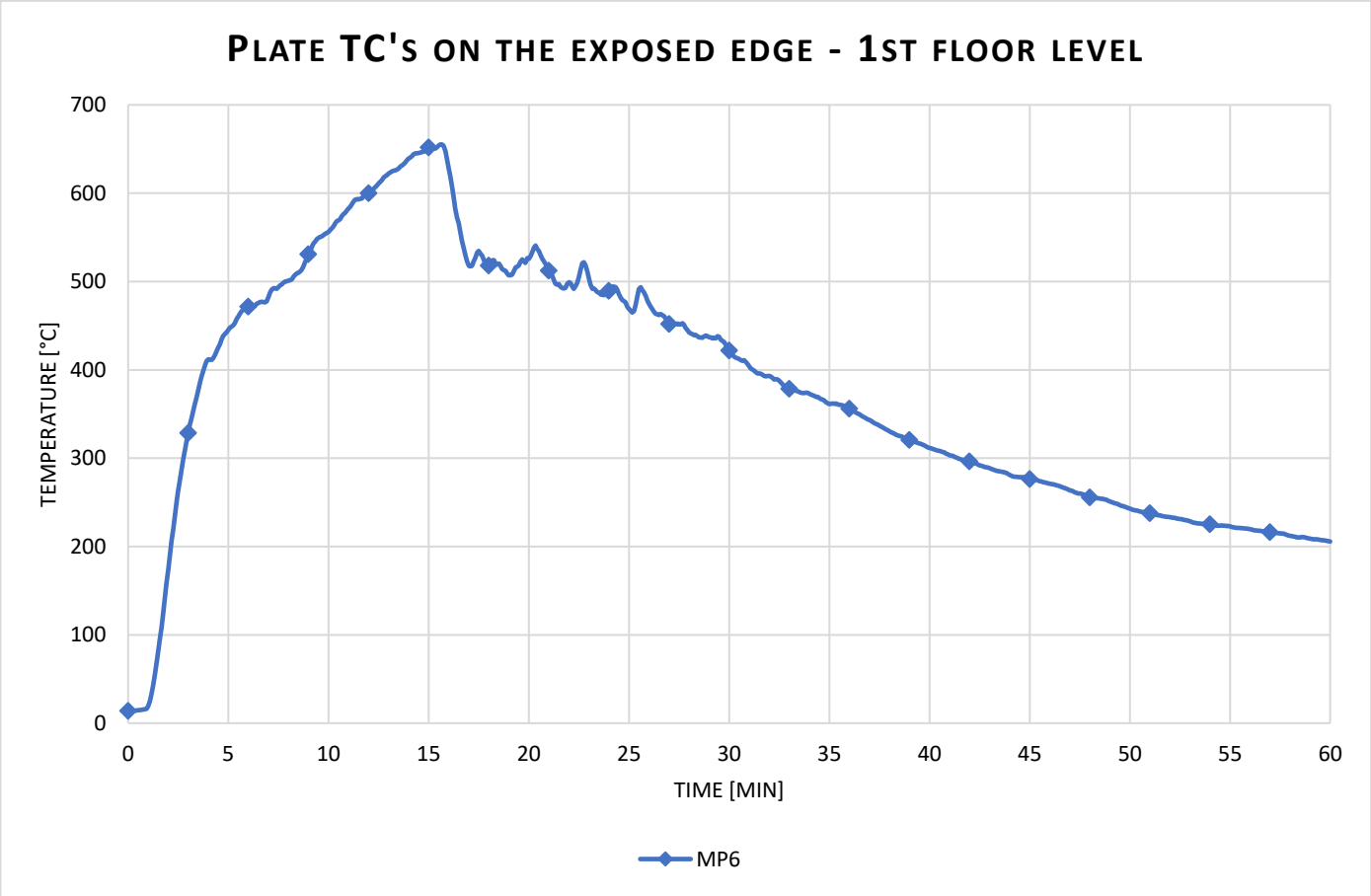

Temperature measured using plate Inconel 1st floor exposed edge

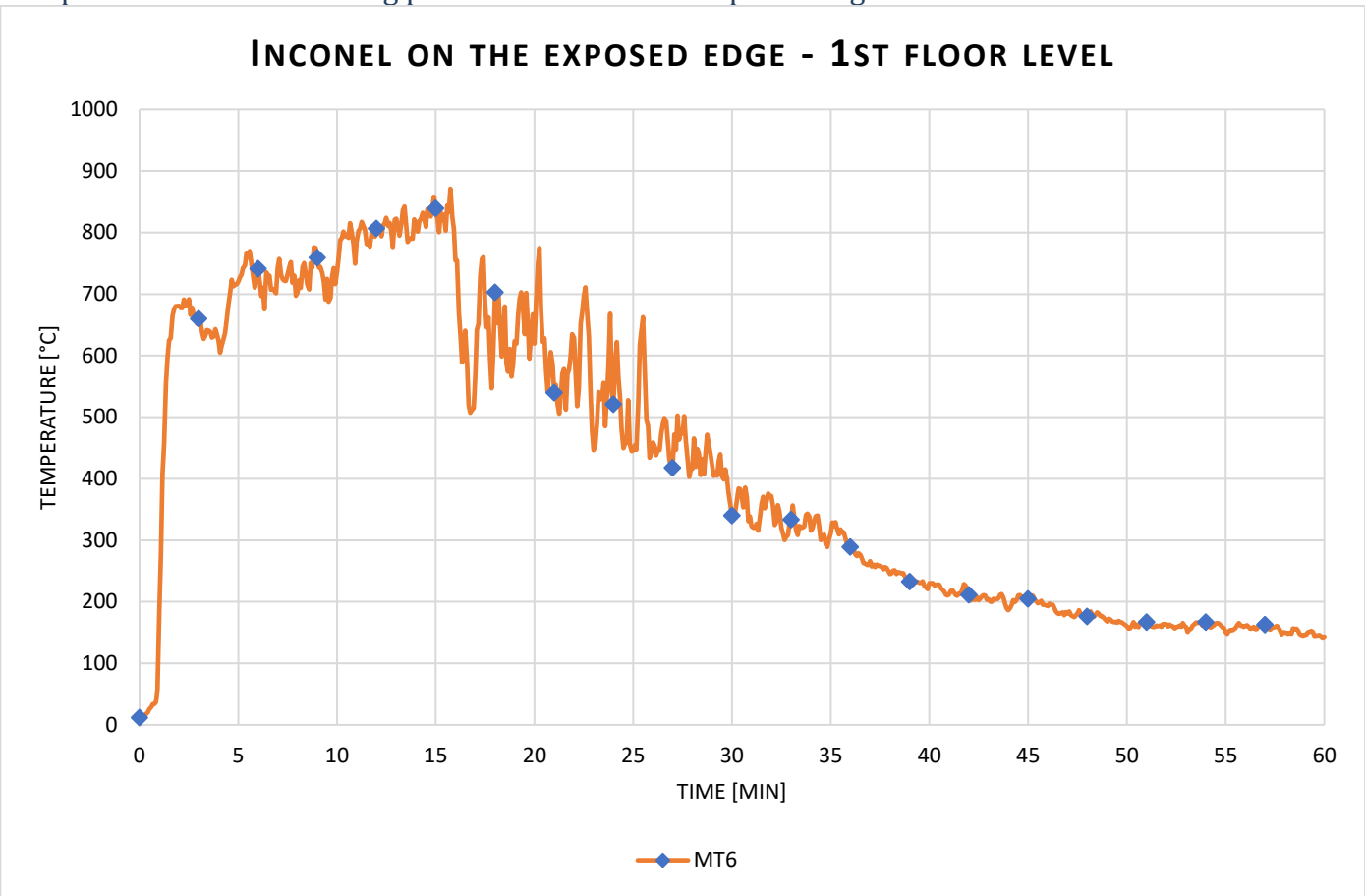

Radiant heat calculated from Plate TC

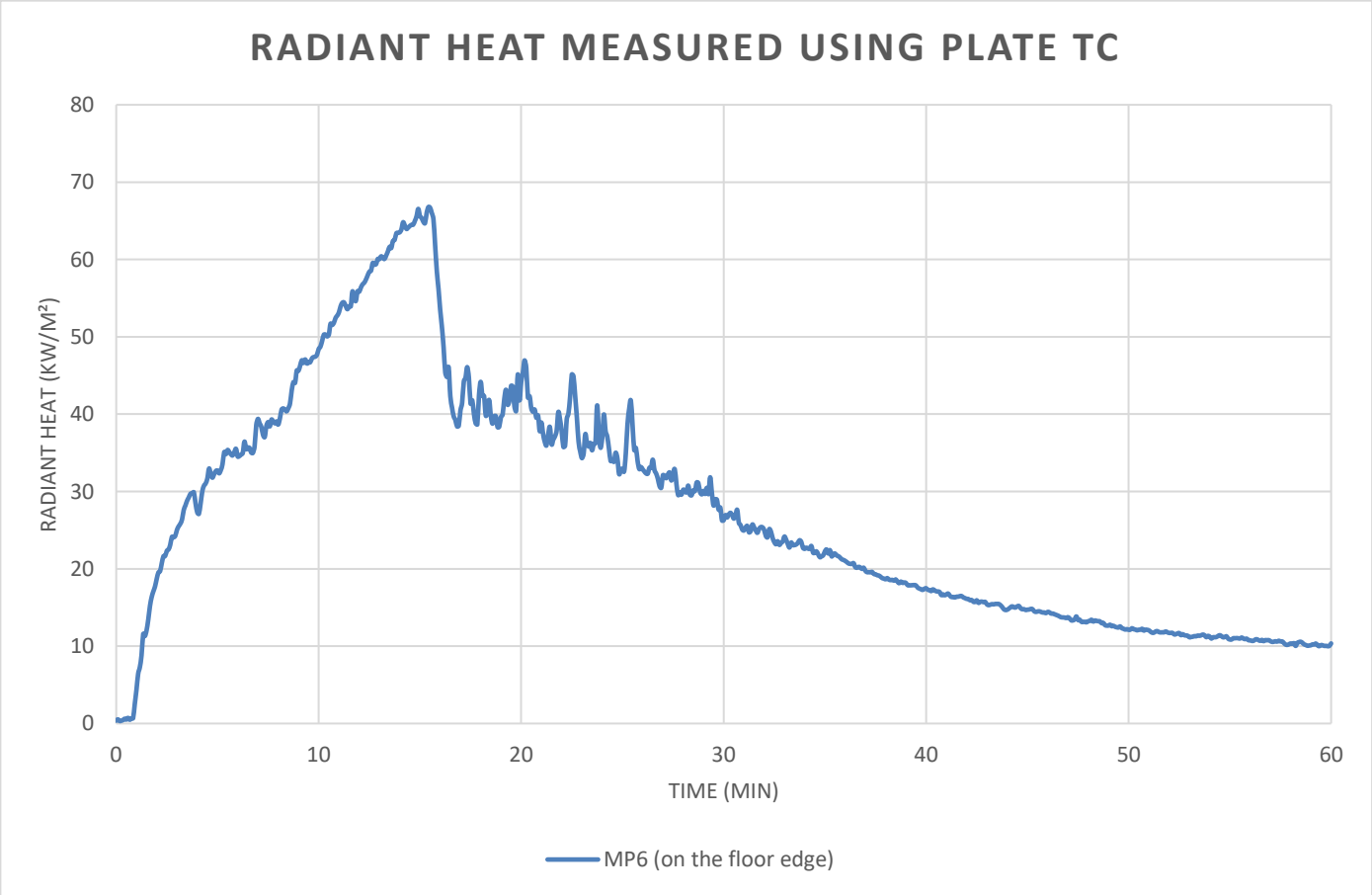

Data measurement from 1st floor exposed edge.

Layout

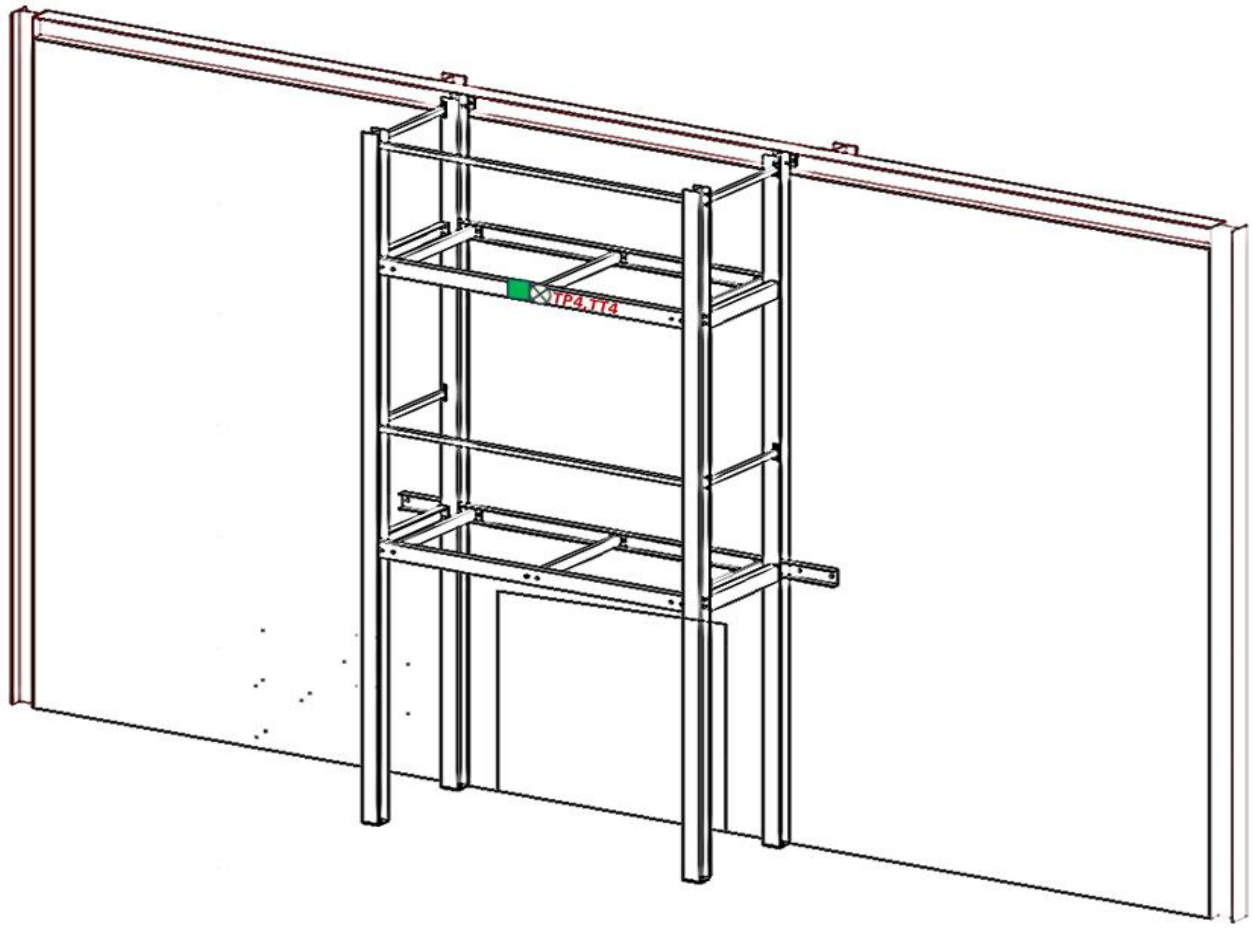

Temperature measured from the Plate TC on exposed edge at 2nd floor

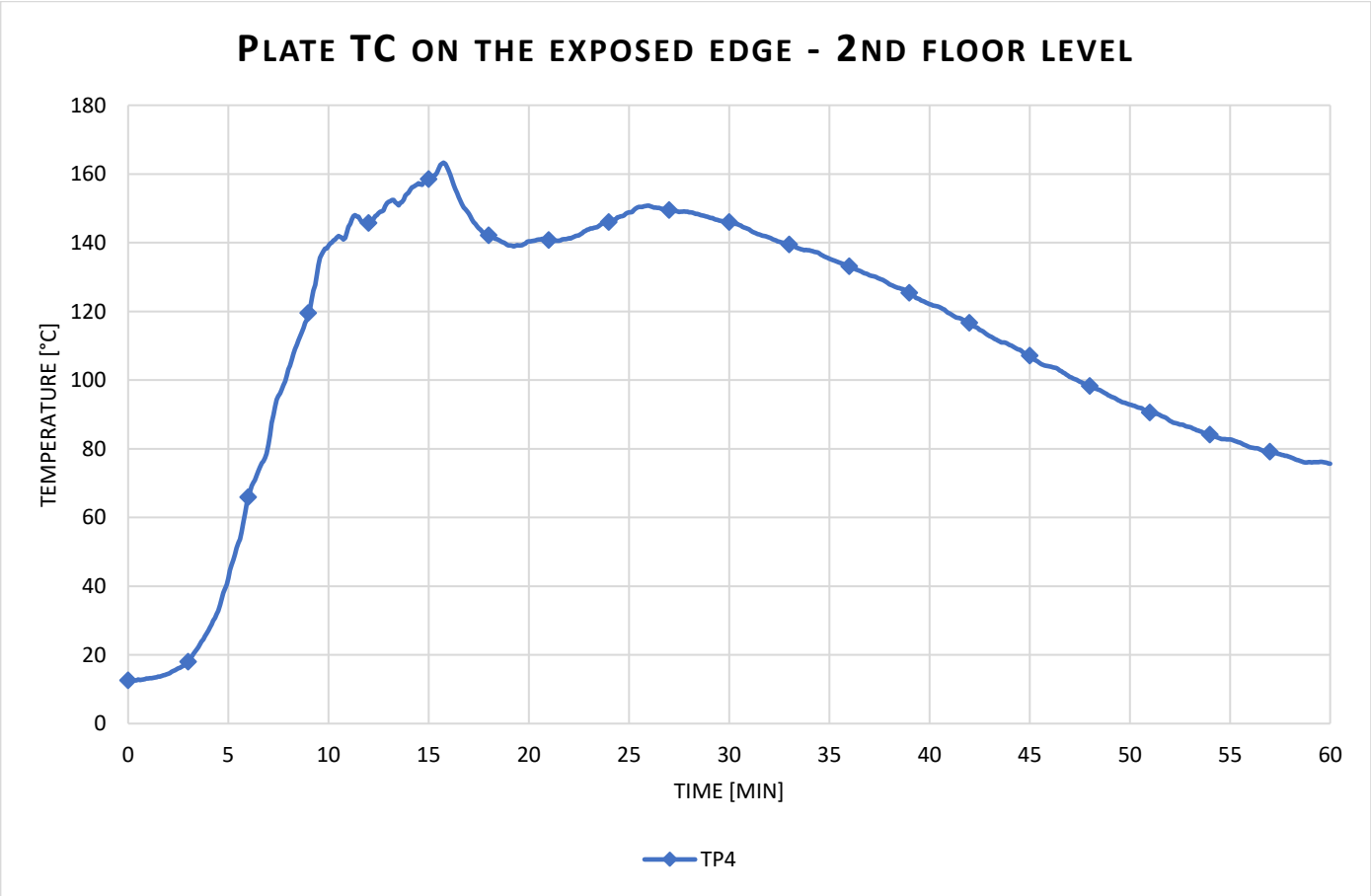

Temperature measured from the Inconel on exposed edge at 2nd floor

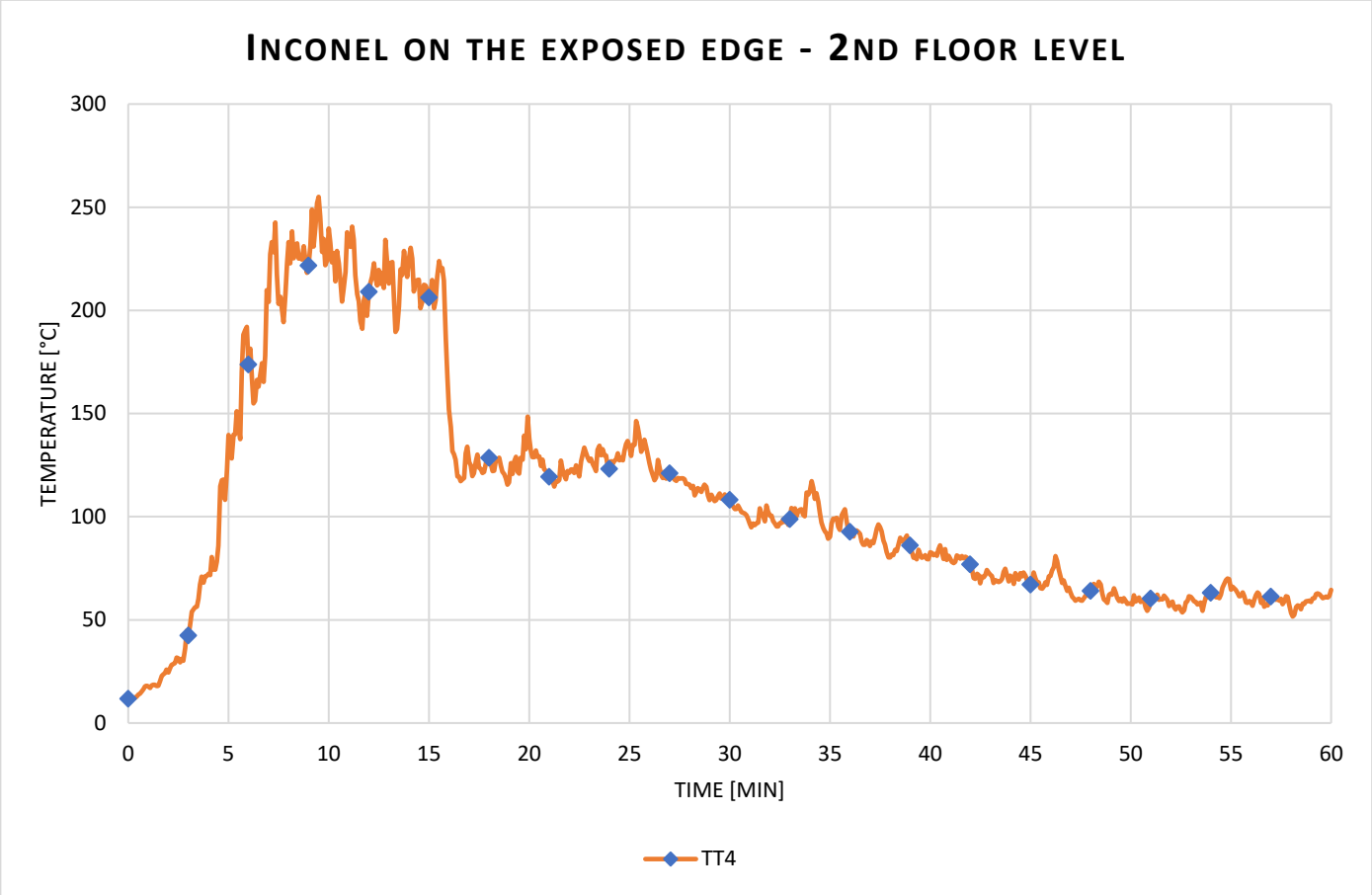

Radiant heat calculated from Plate TC

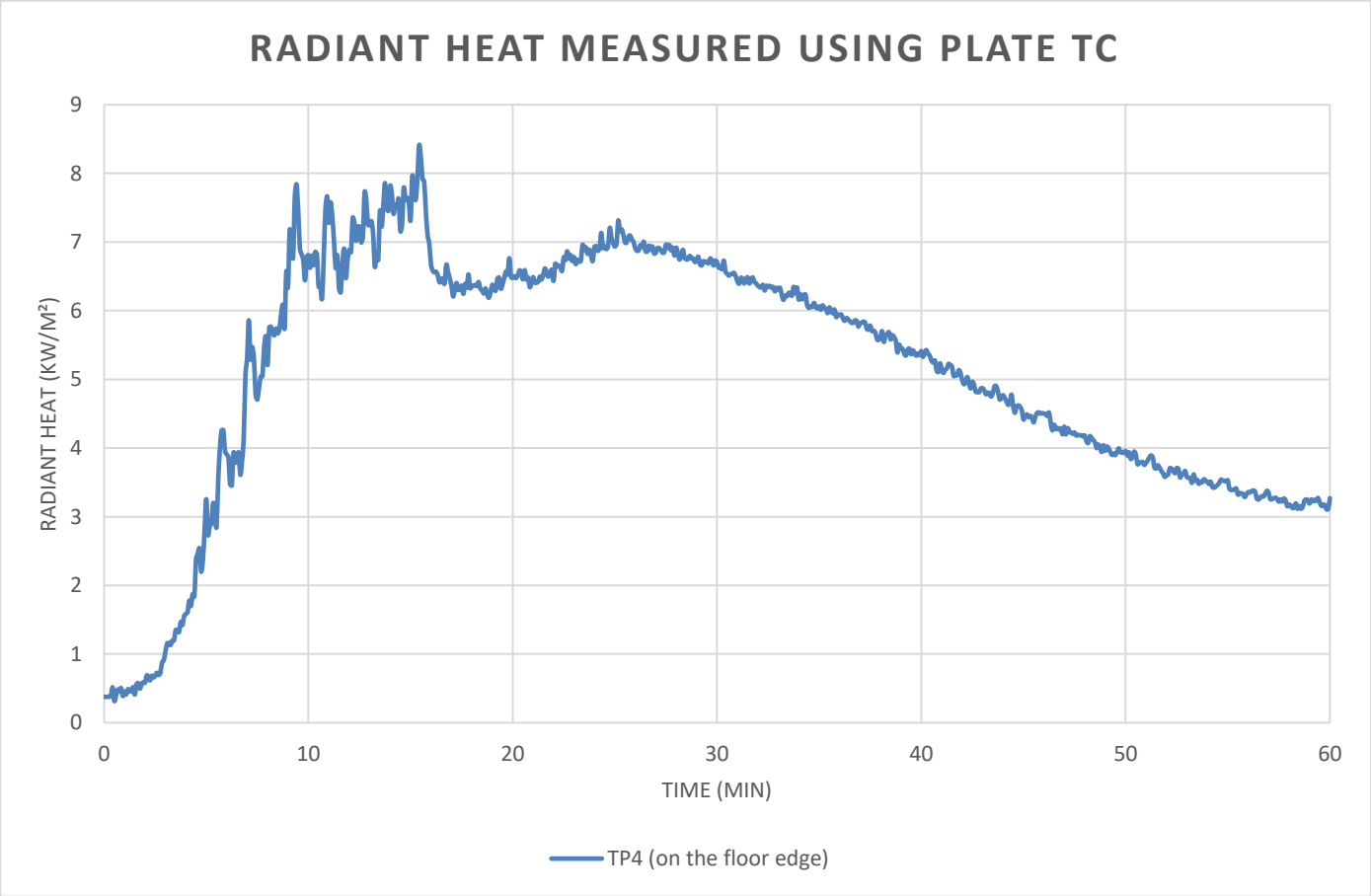

Data measurement from 1st floor handrails.

Layout

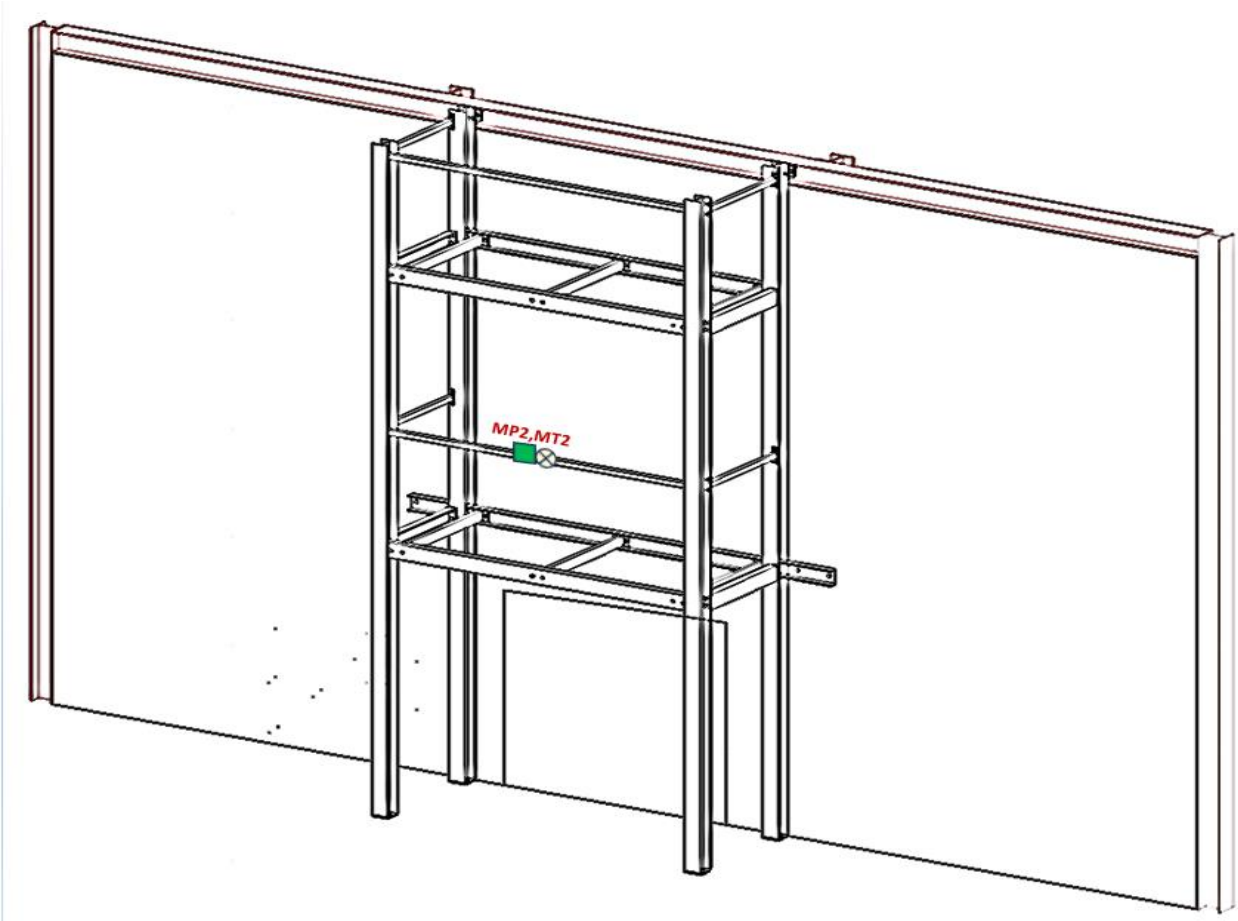

Temperature measured from the Plate TC on 1st floor handrails

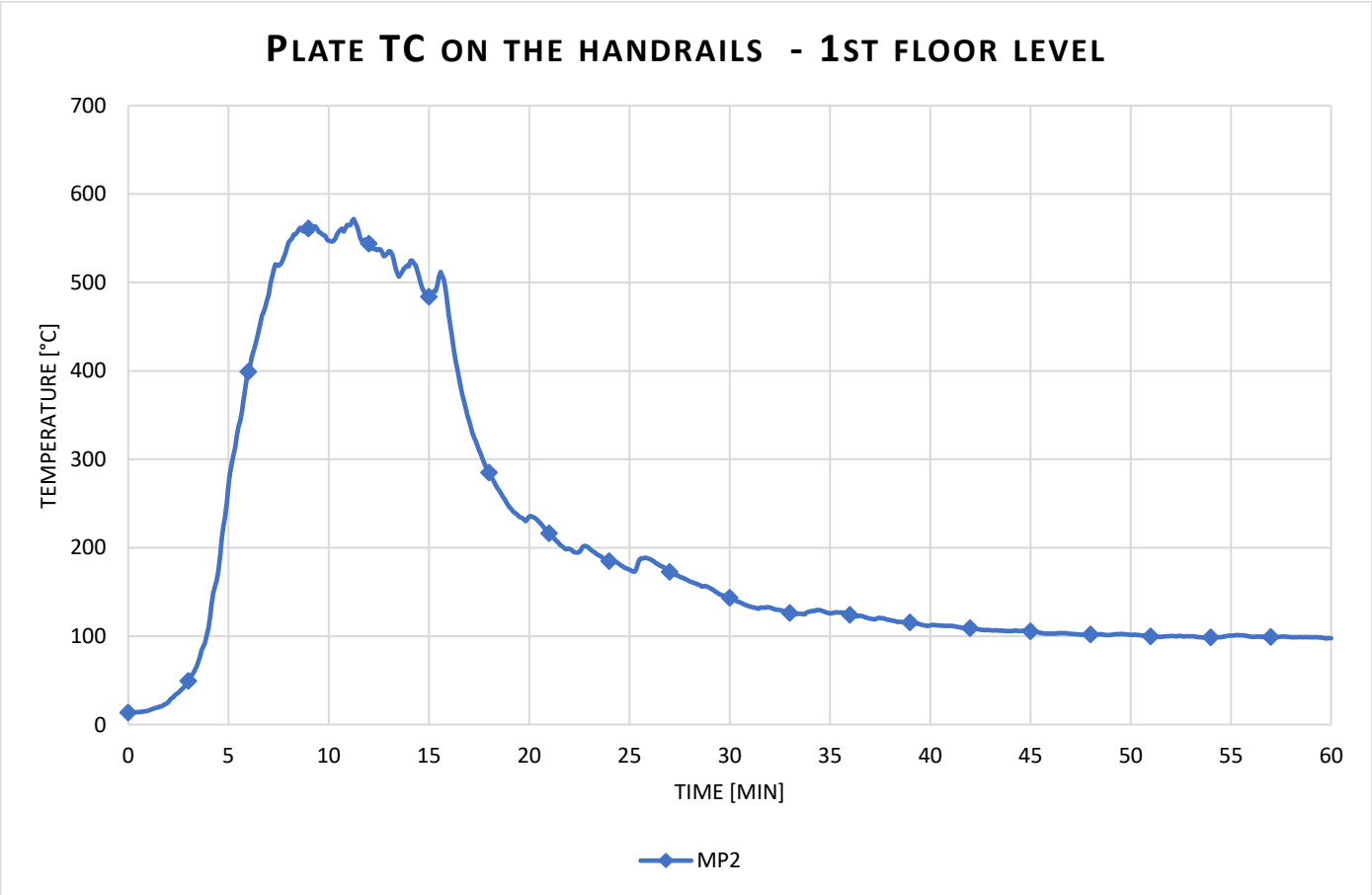

Temperature measured from the Inconel on 1st floor handrails

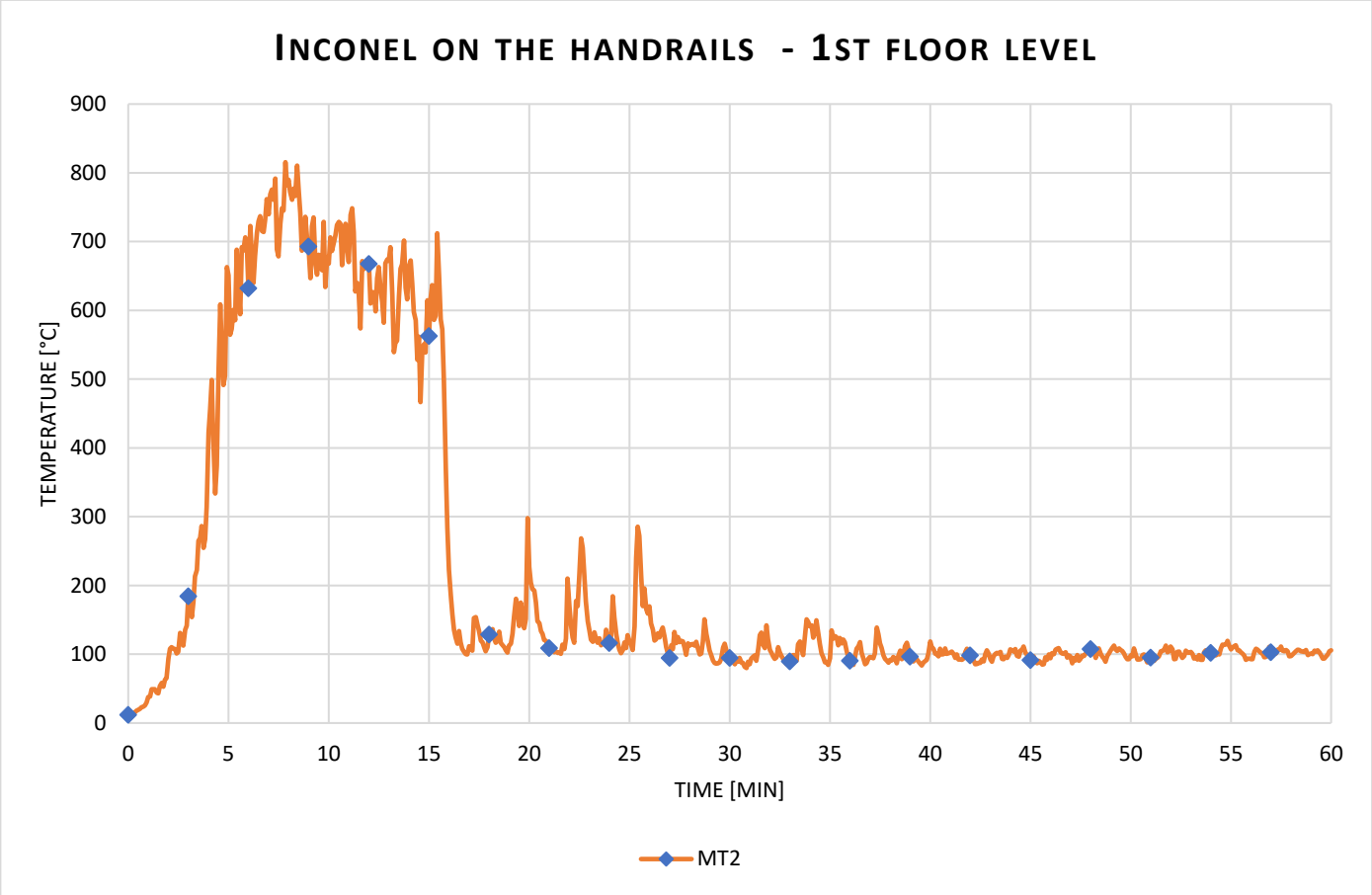

Radiant heat calculated from Plate TC

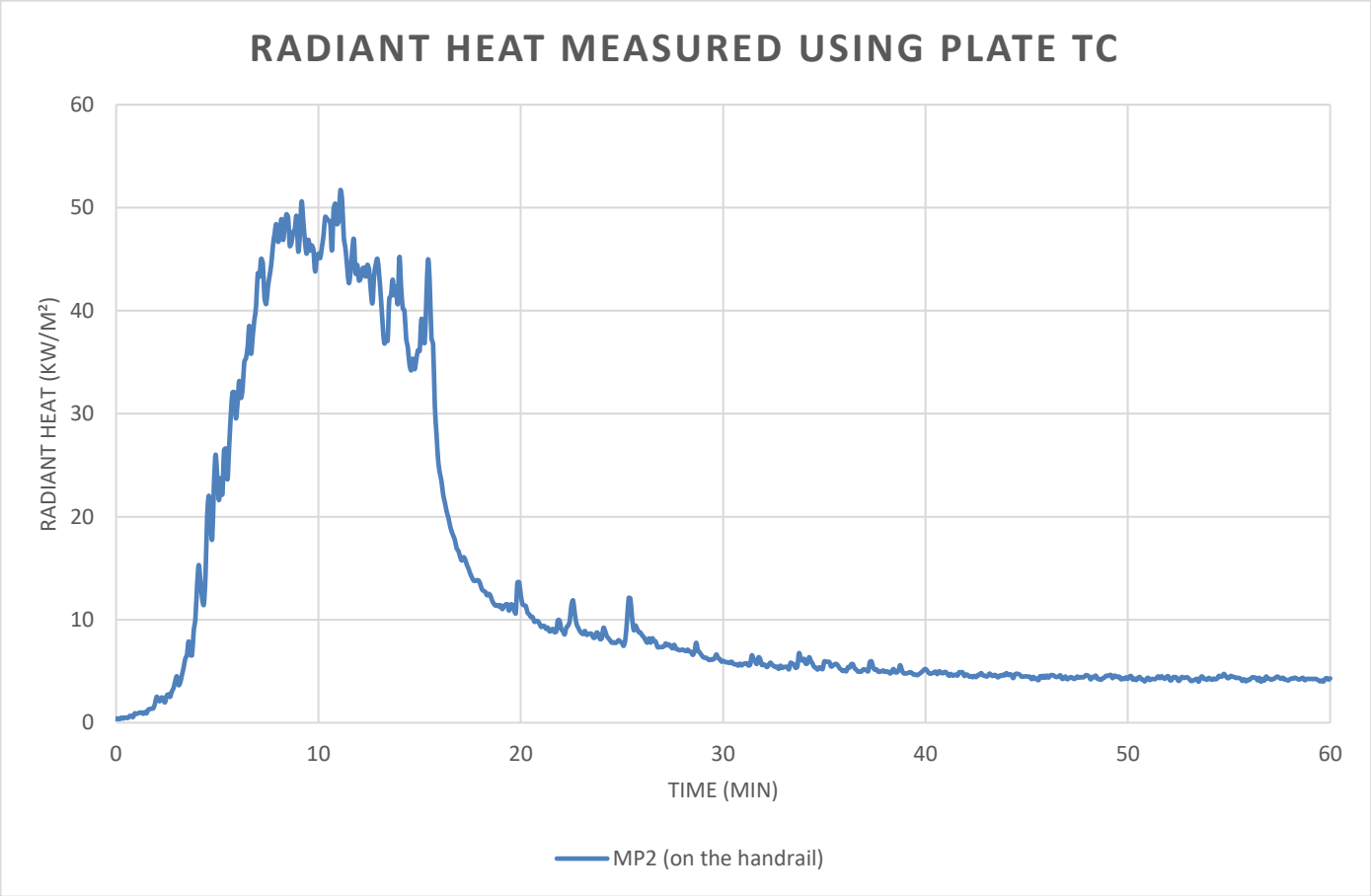

Data measurement from 2nd floor handrails.

Layout

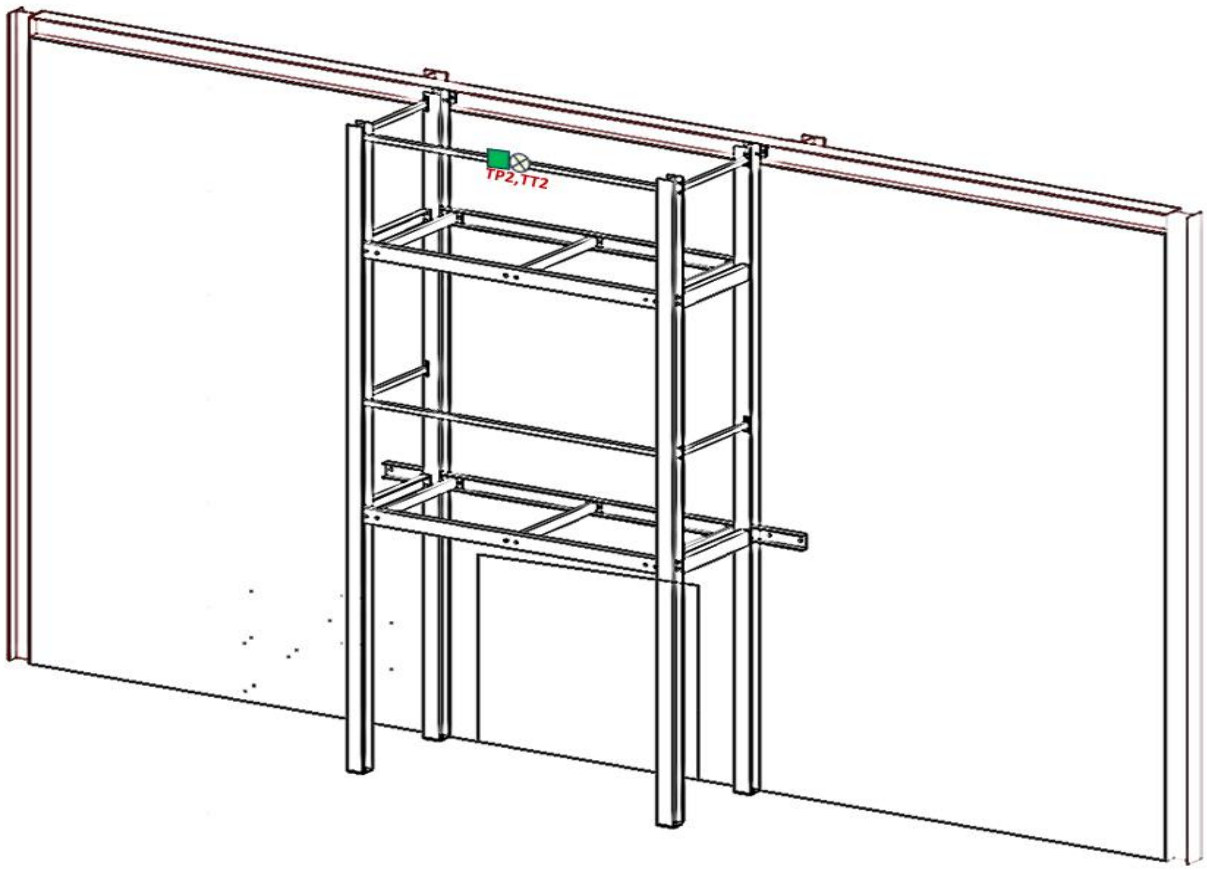

Temperature measured from the Plate TC on 2nd floor handrails (Broken during test after 27min 30 sec).

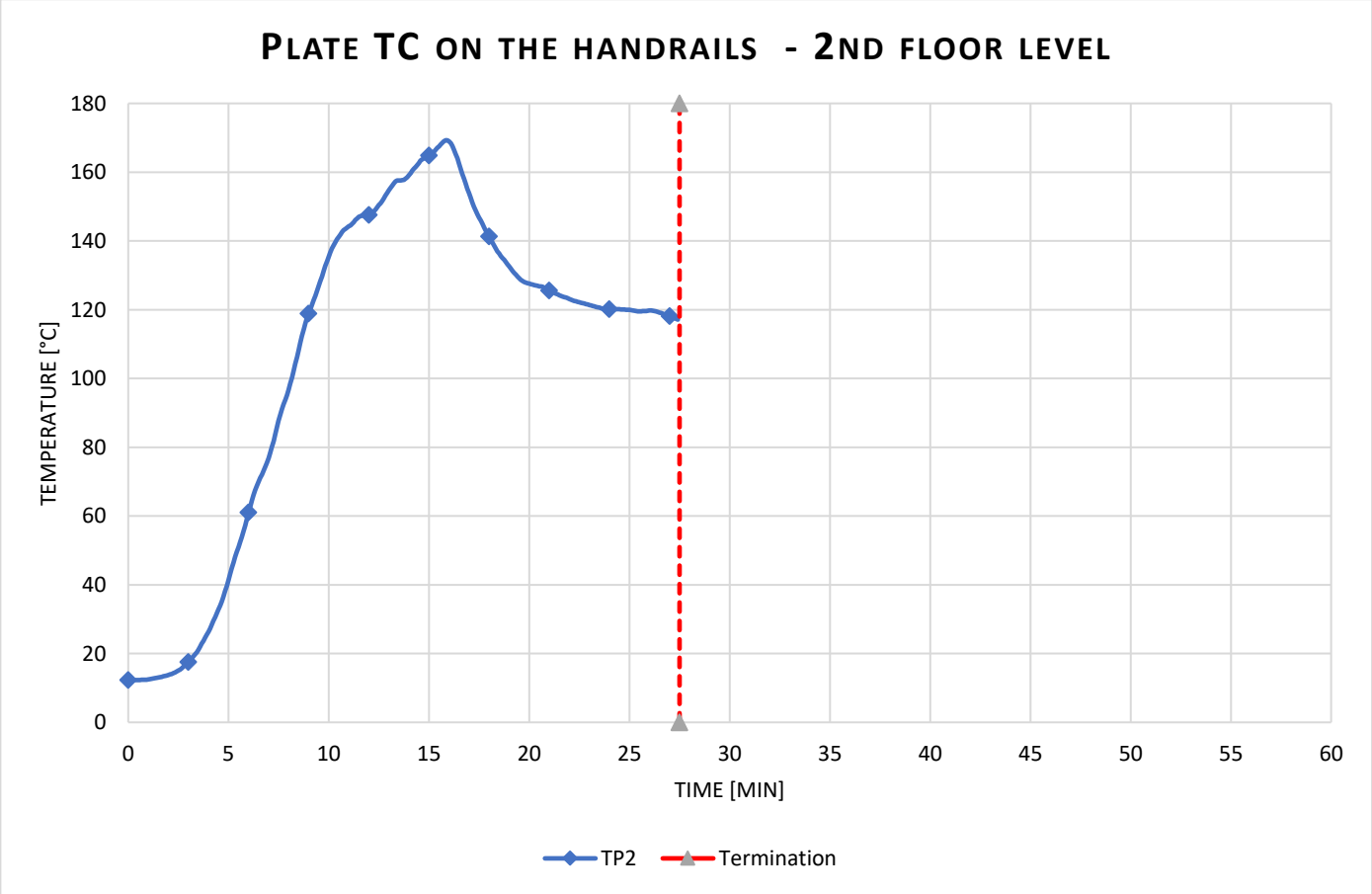

Temperature measured from the Inconel on 2nd floor handrails

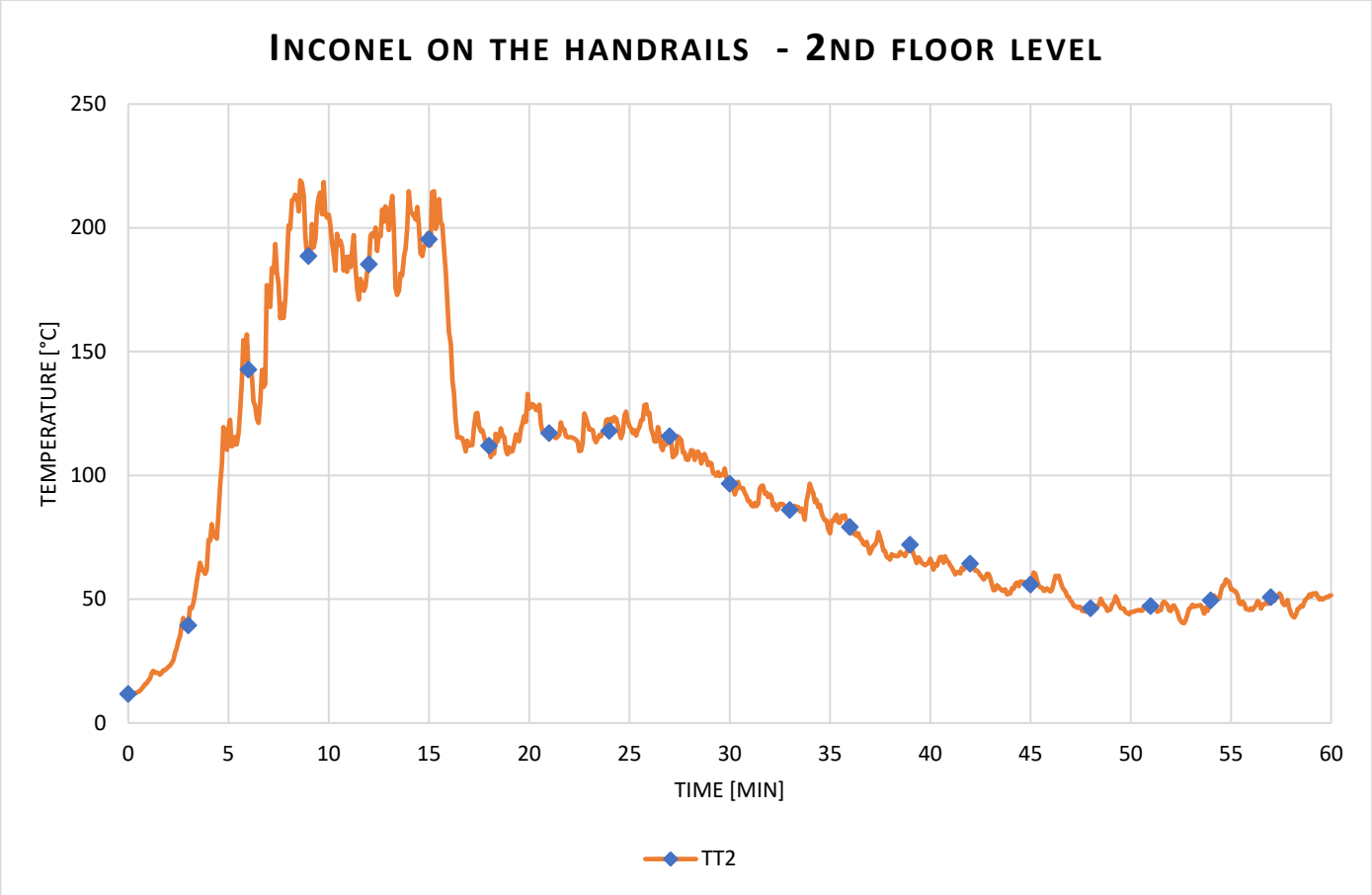

Radiant heat calculated from Plate TC

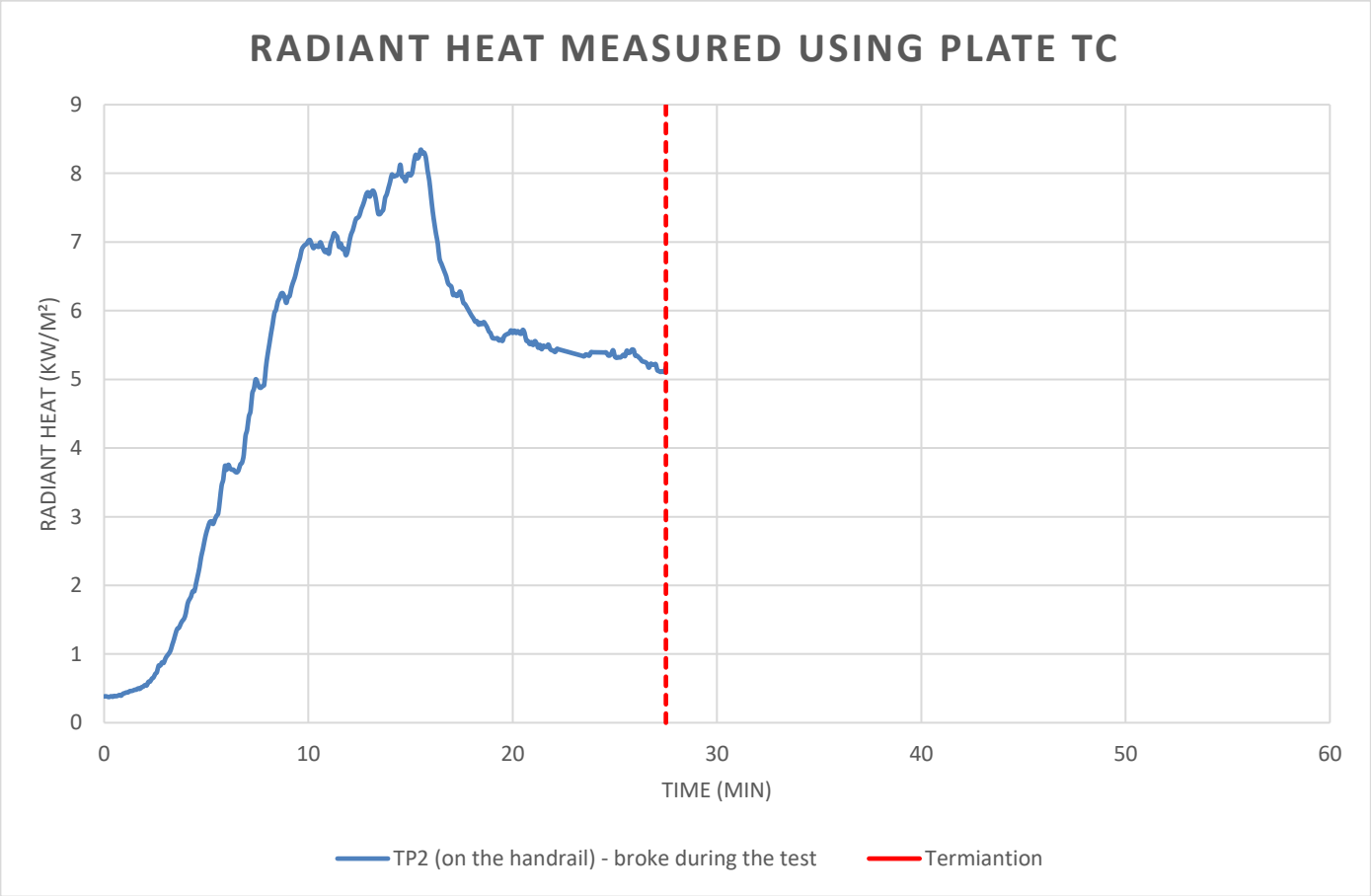

Data measurement from Ground floor sidewalls

Layout

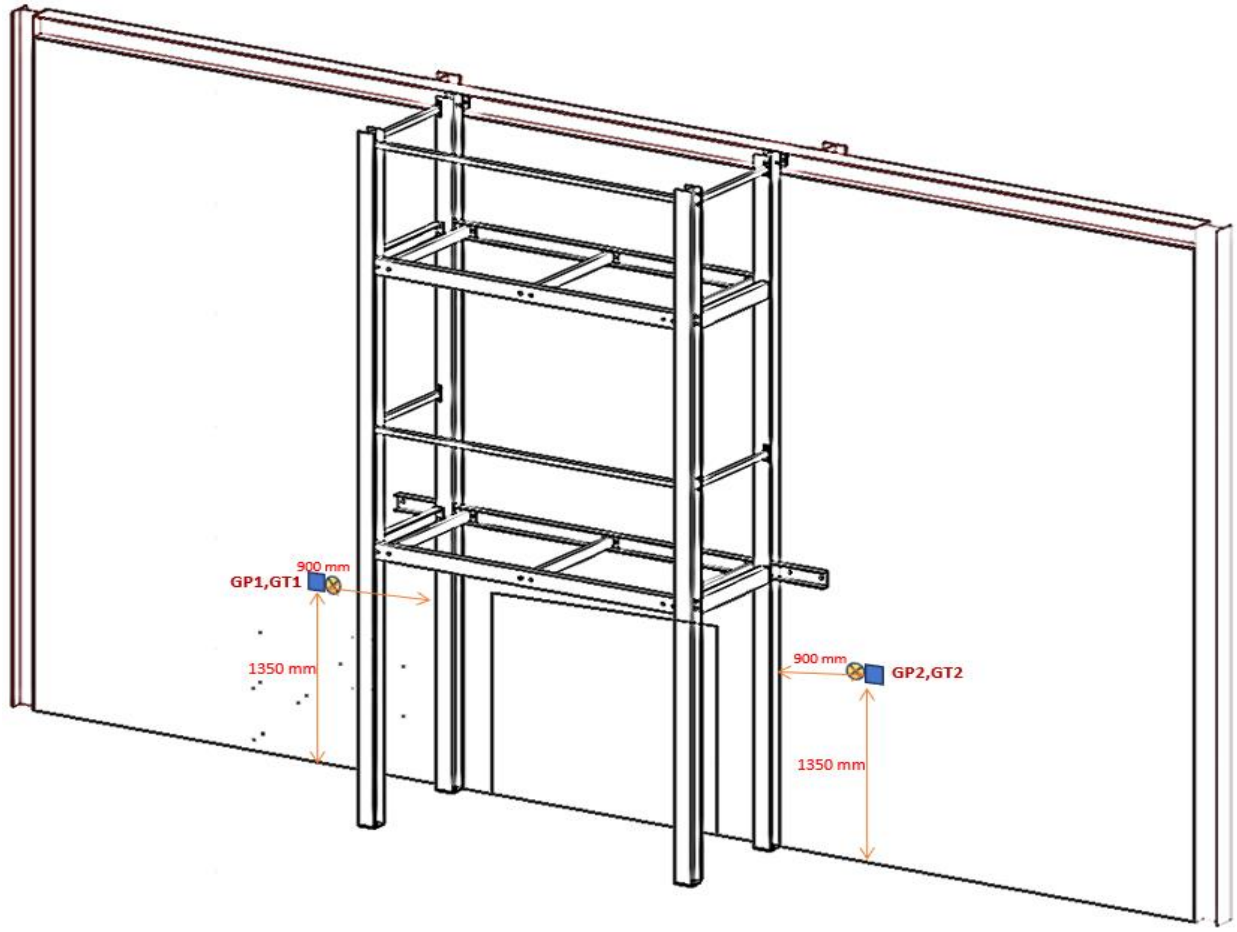

Temperature measured from the Plate TC's from Ground floor sidewalls

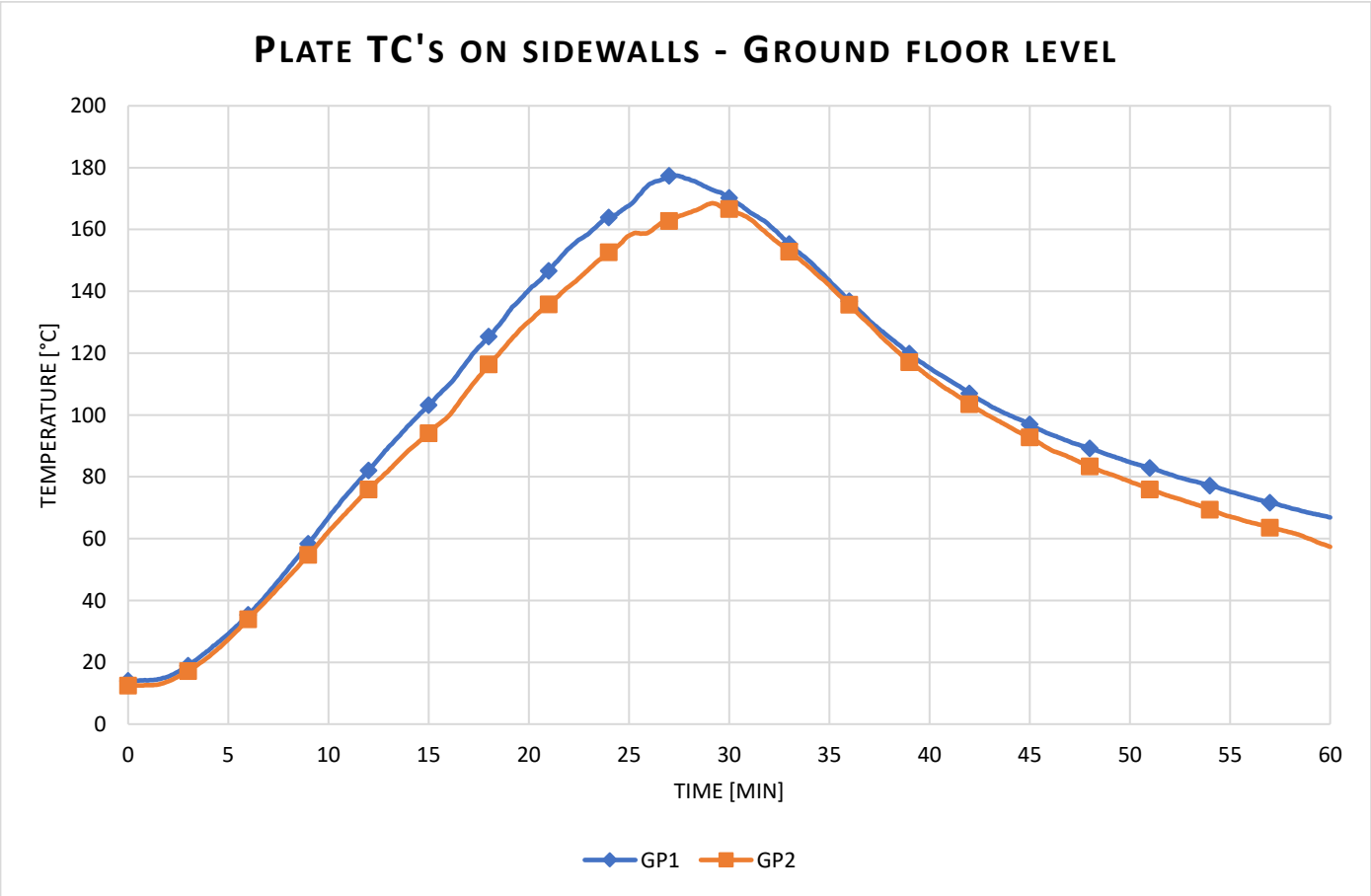

Temperature measured from the Inconel from 1st floor sidewall

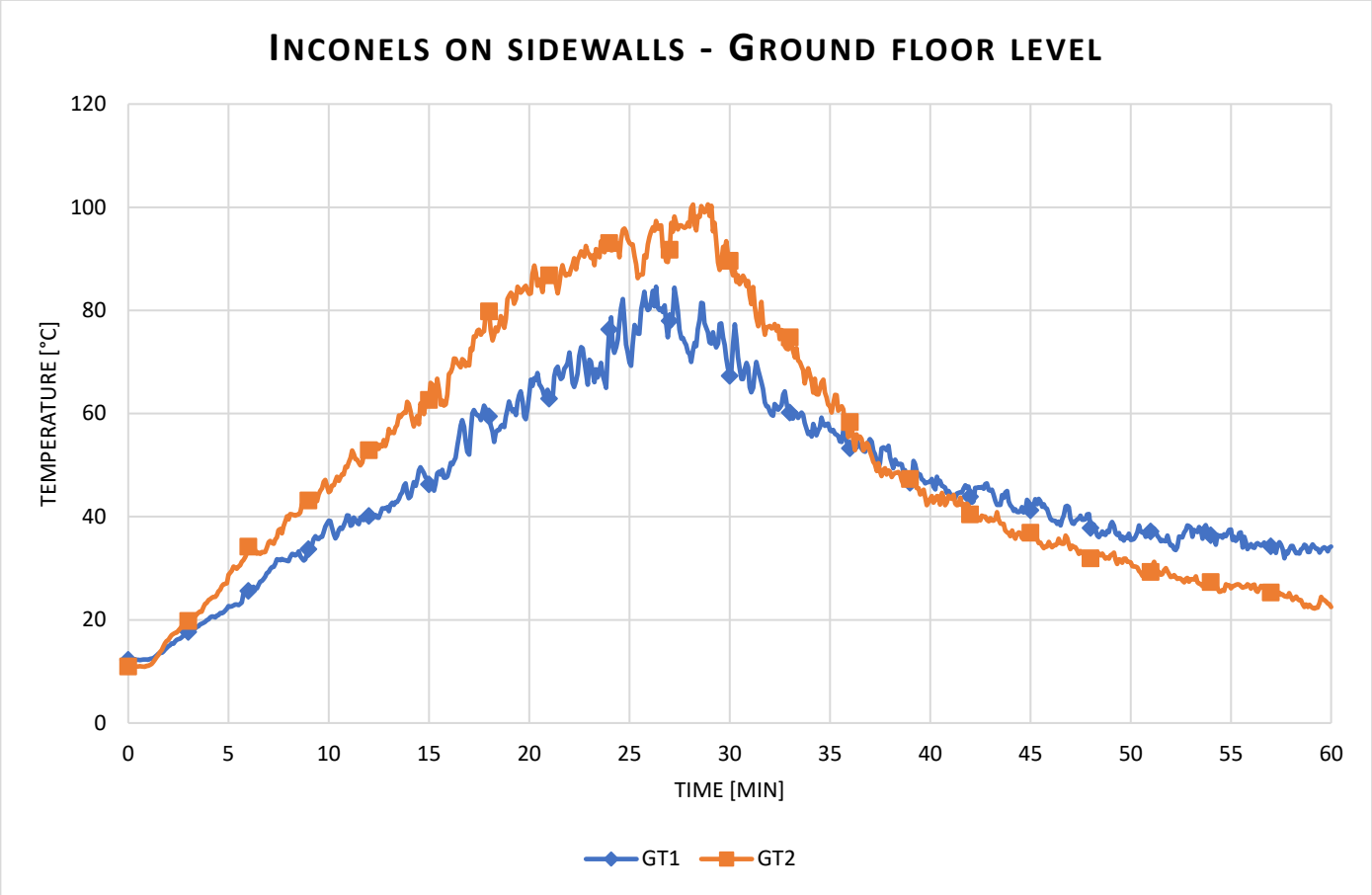

Radiant heat calculated from Plate TC's

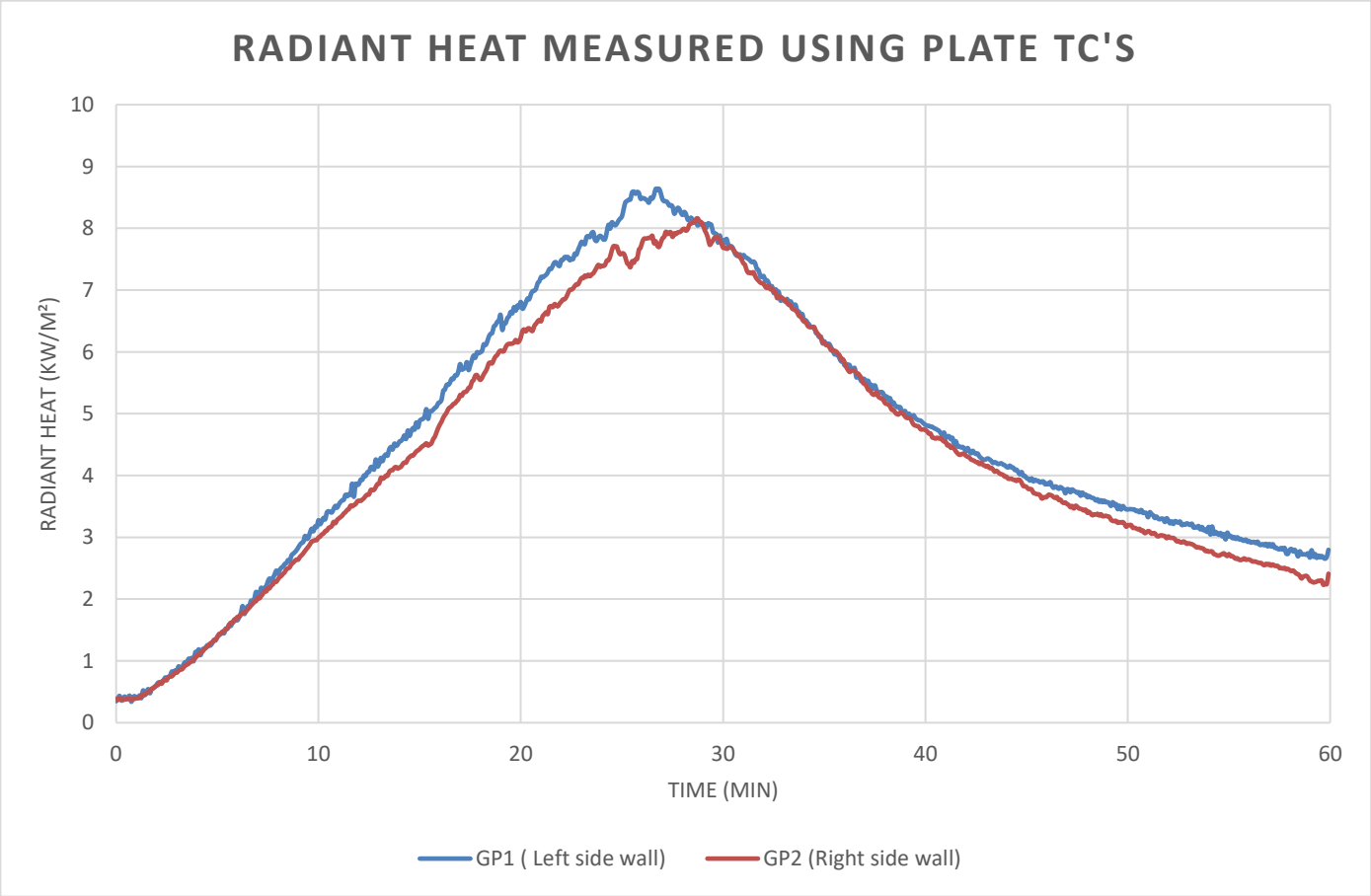

Data measurement from 1st floor sidewall

Layout

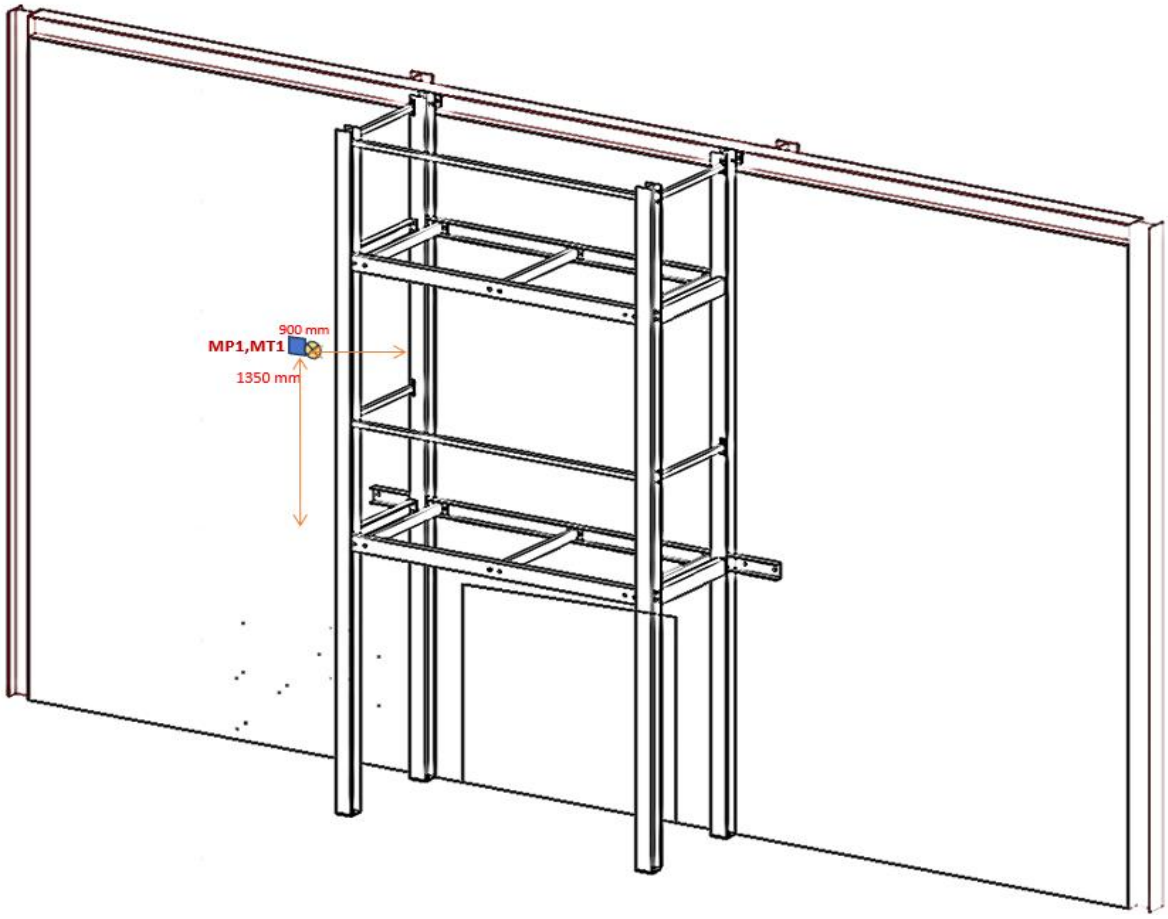

Temperature measured from the Plate TC from 1st floor sidewall

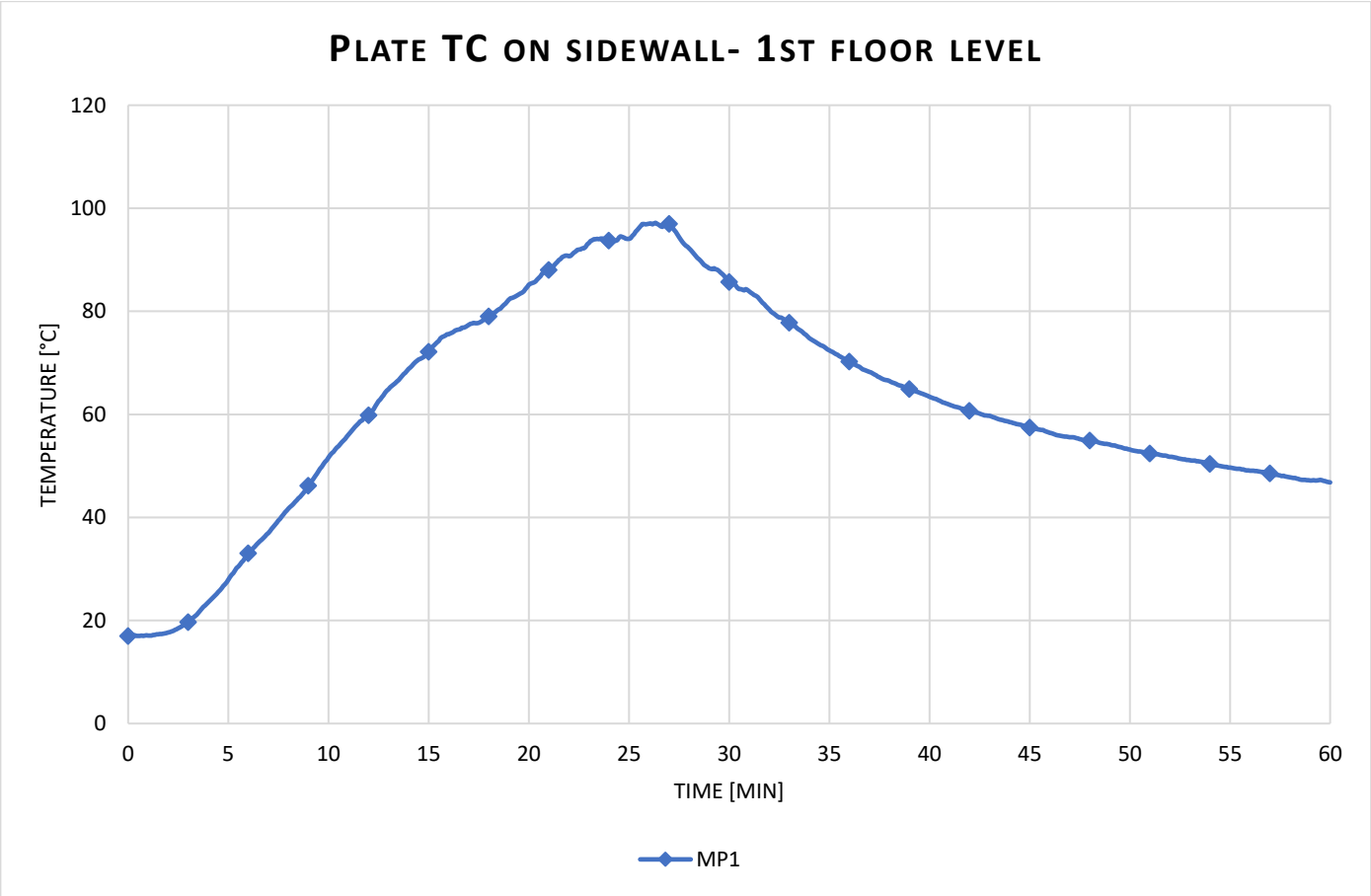

Temperature measured from the Inconel from 1st floor sidewall

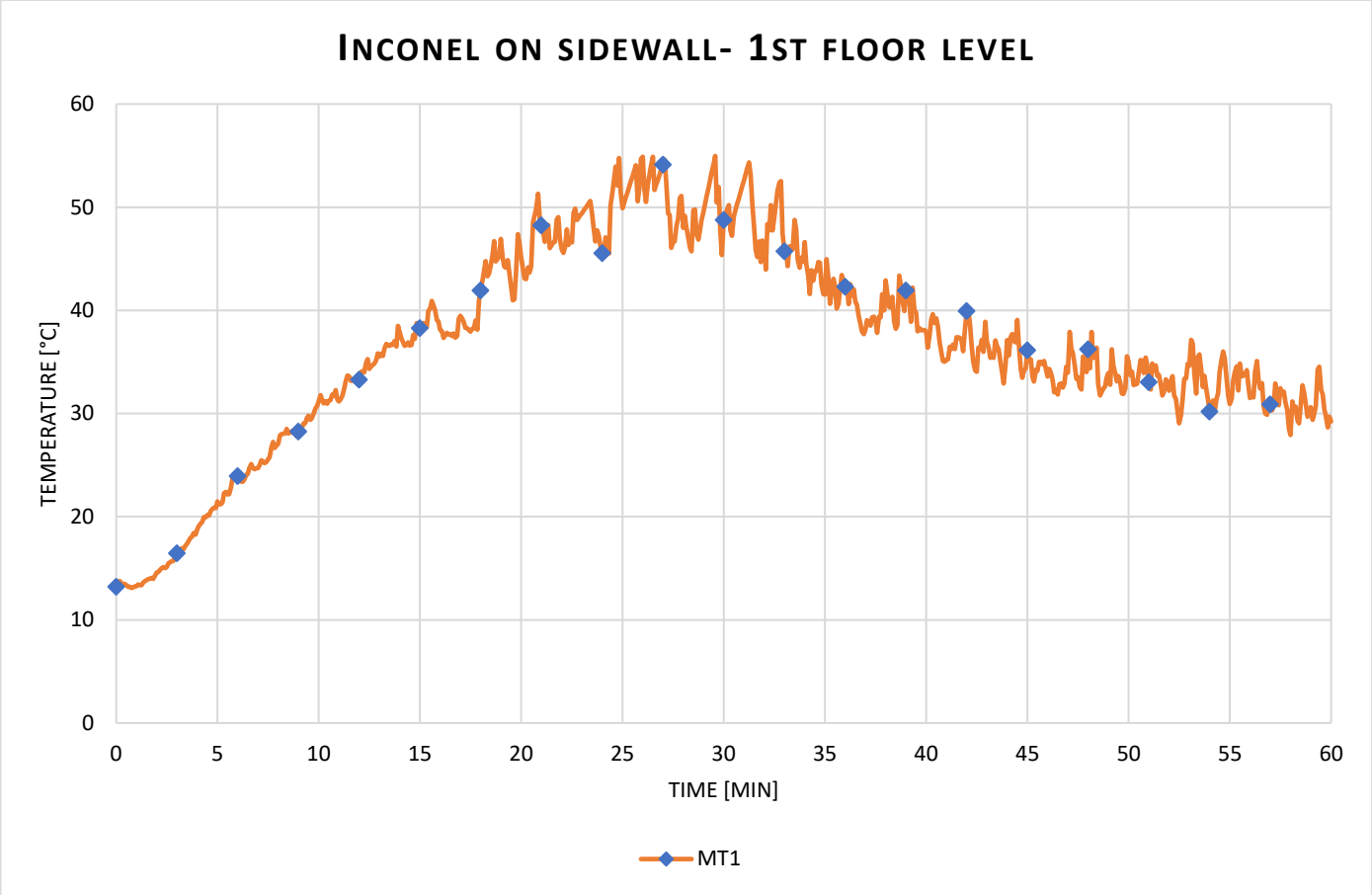

Radiant heat calculated from Plate TC

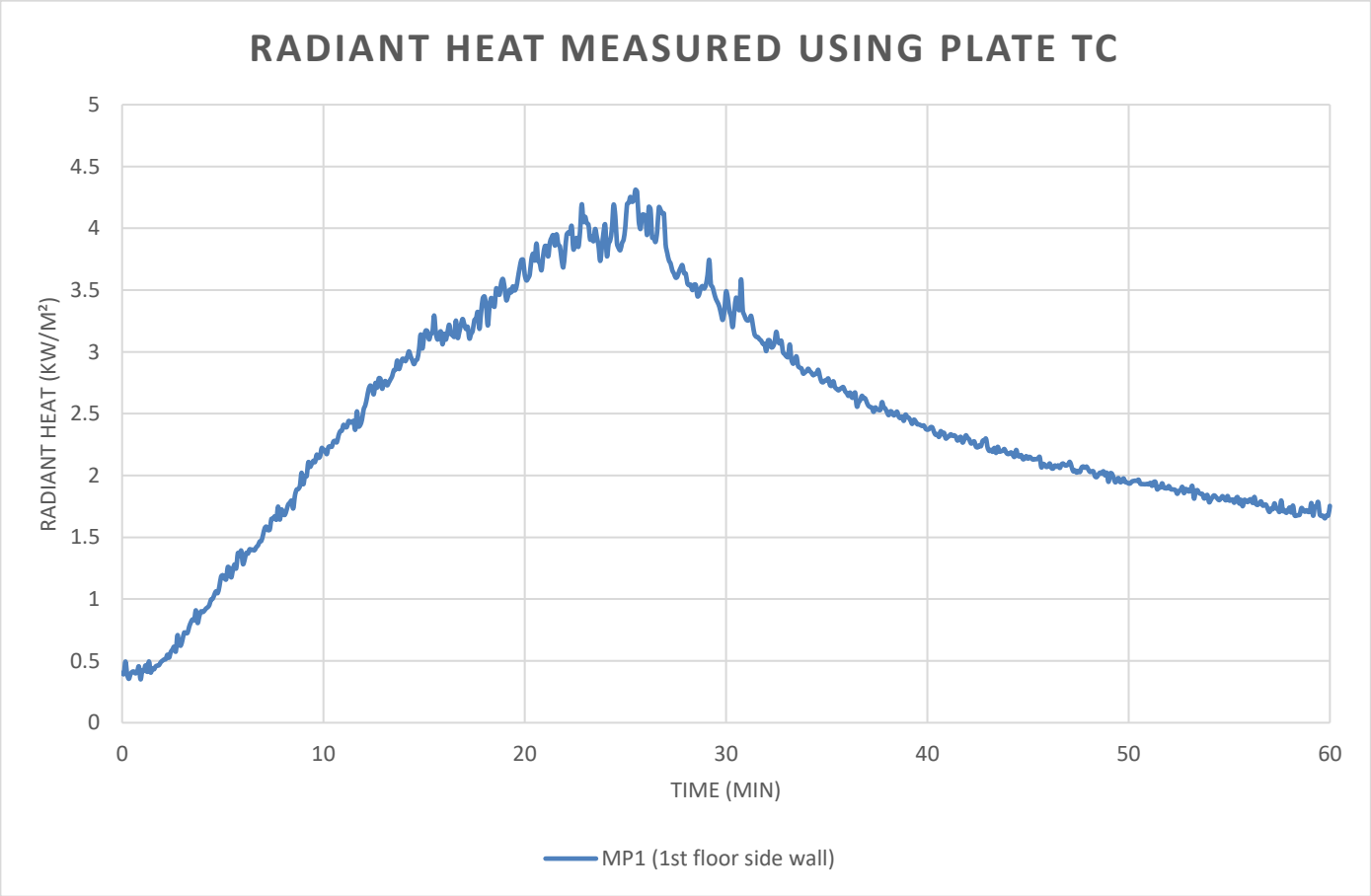

Data measurement from 2nd floor sidewall

Layout

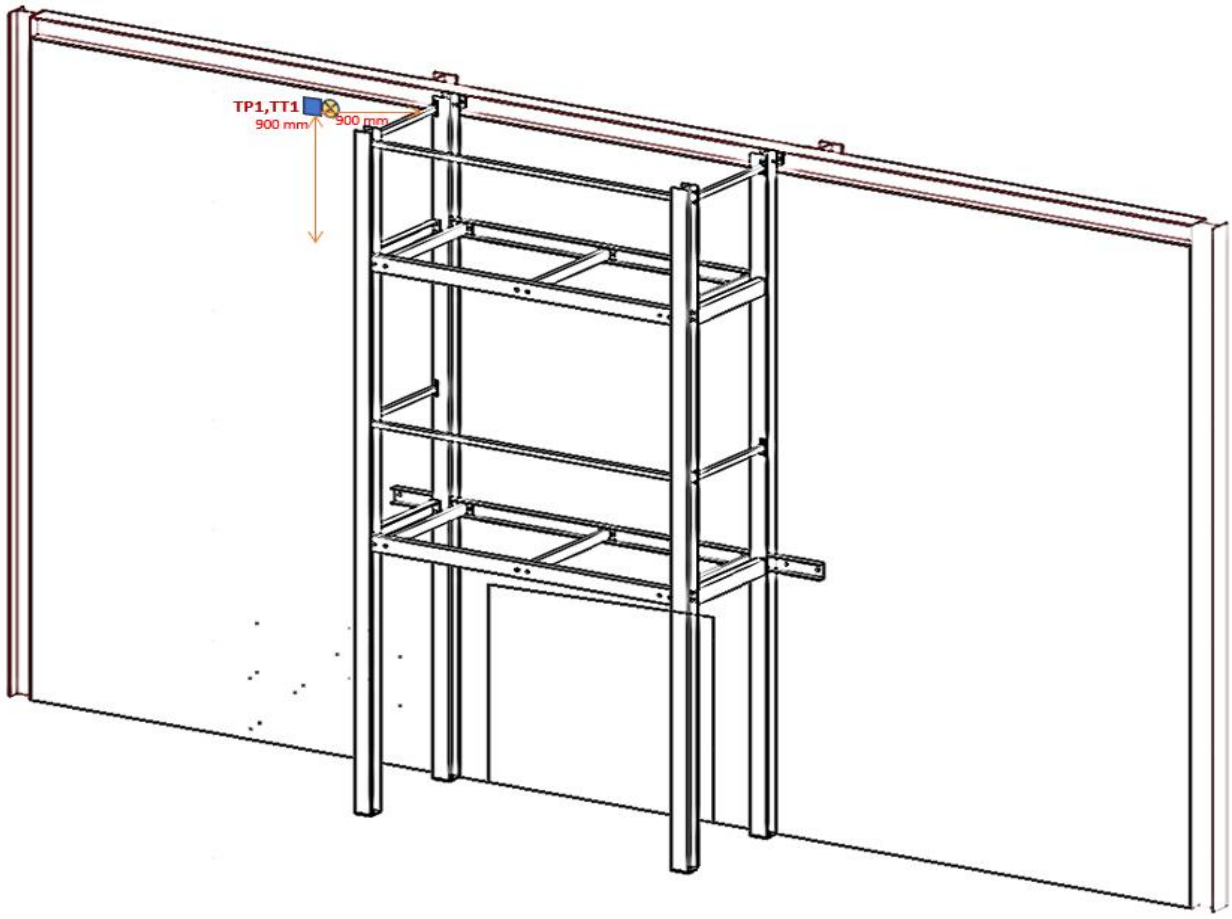

Temperature measured from the Plate TC from 2nd floor sidewall

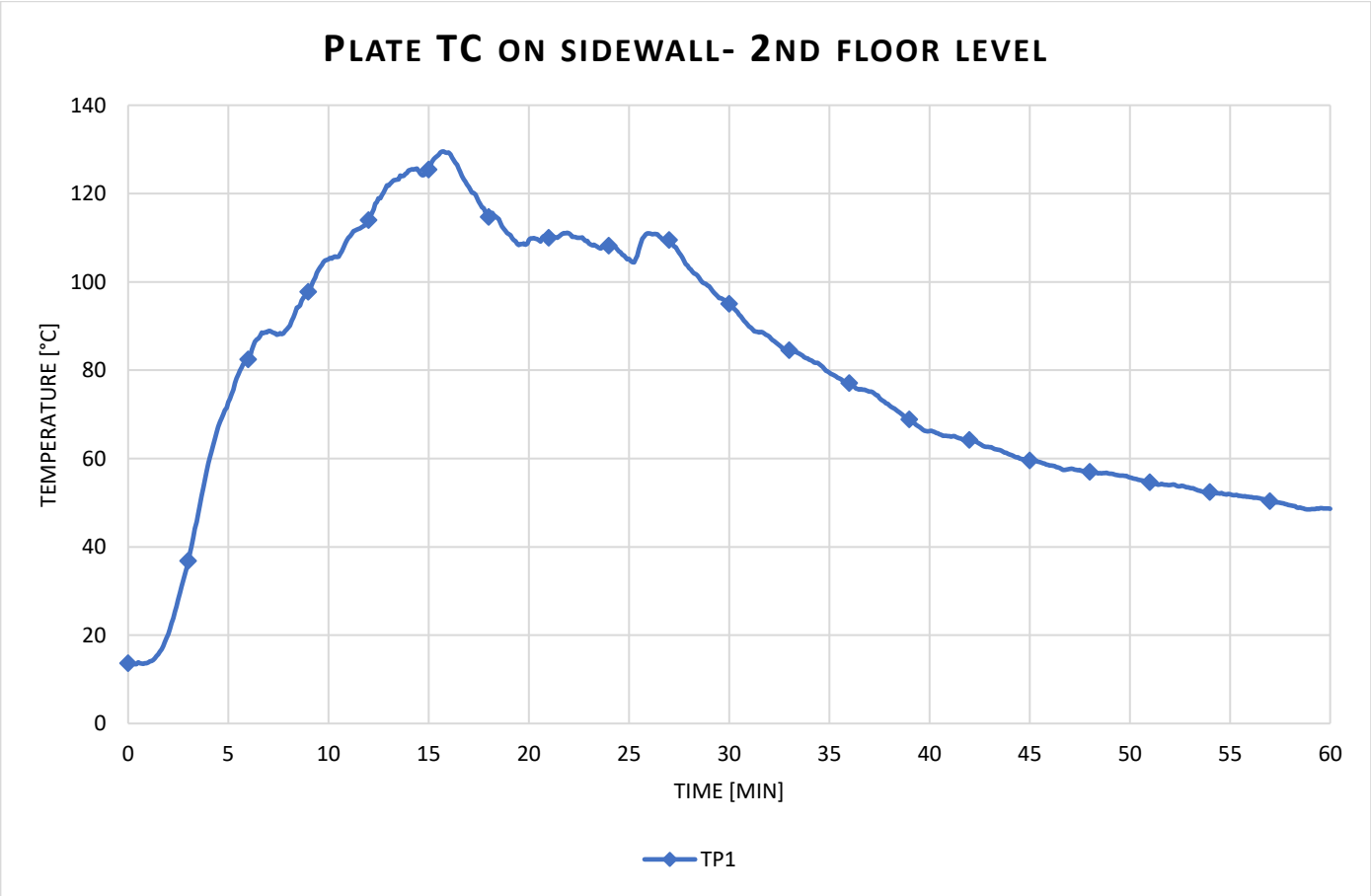

Temperature measured from the Inconel from 2nd floor sidewall

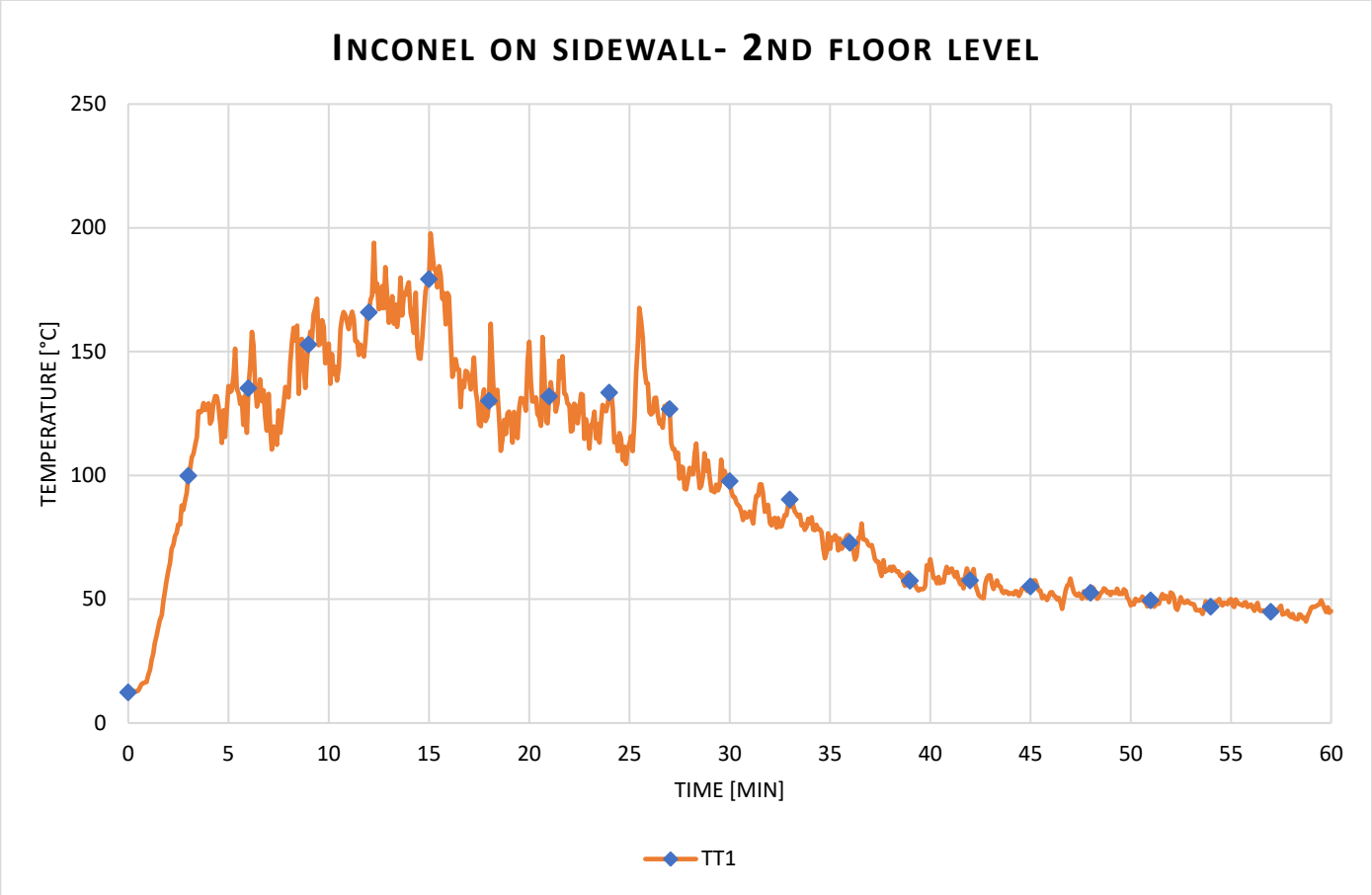

Radiant heat calculated from Plate TC

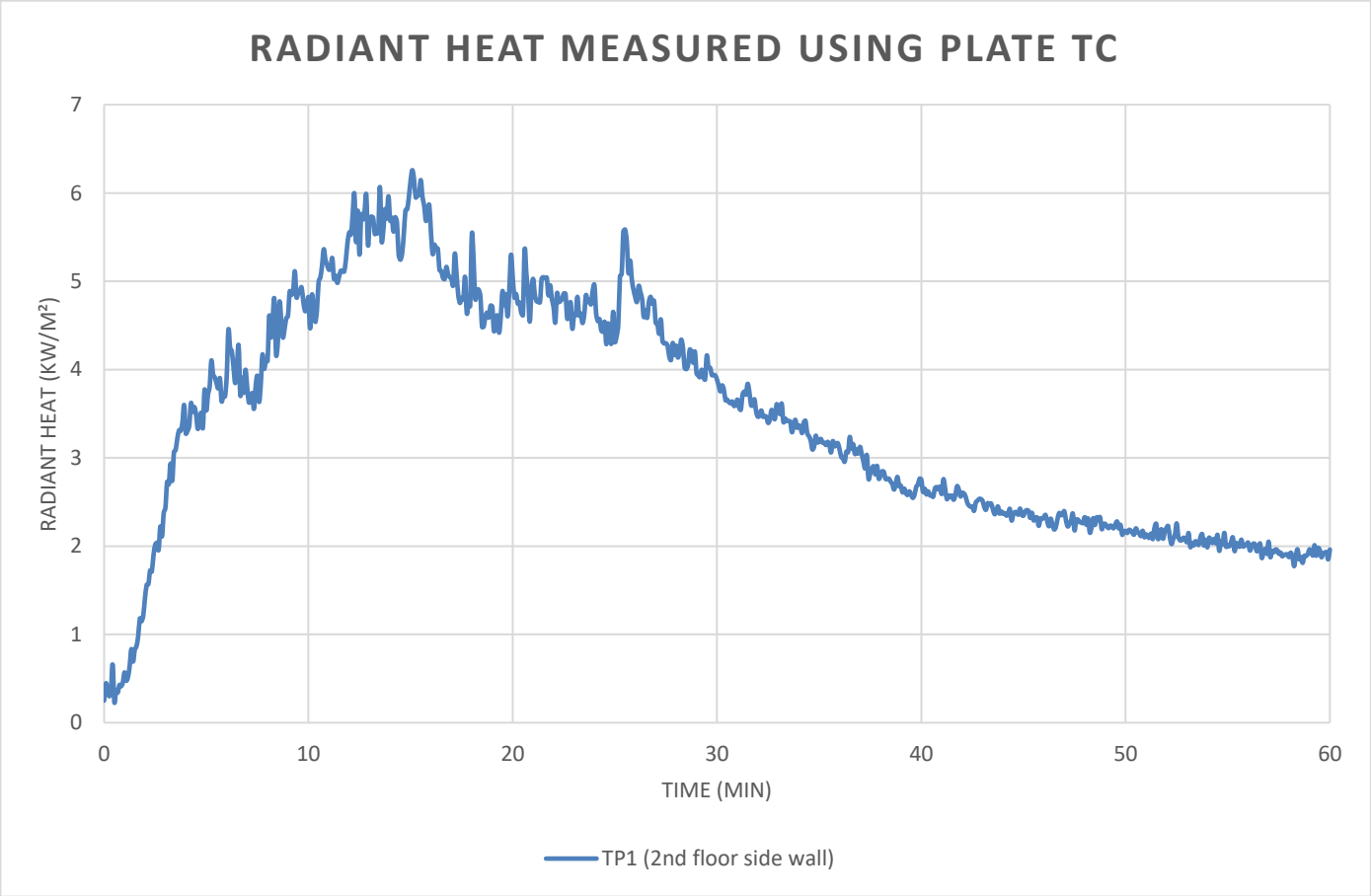

Data measurement from the steel C-section underneath 1st floor

Layout

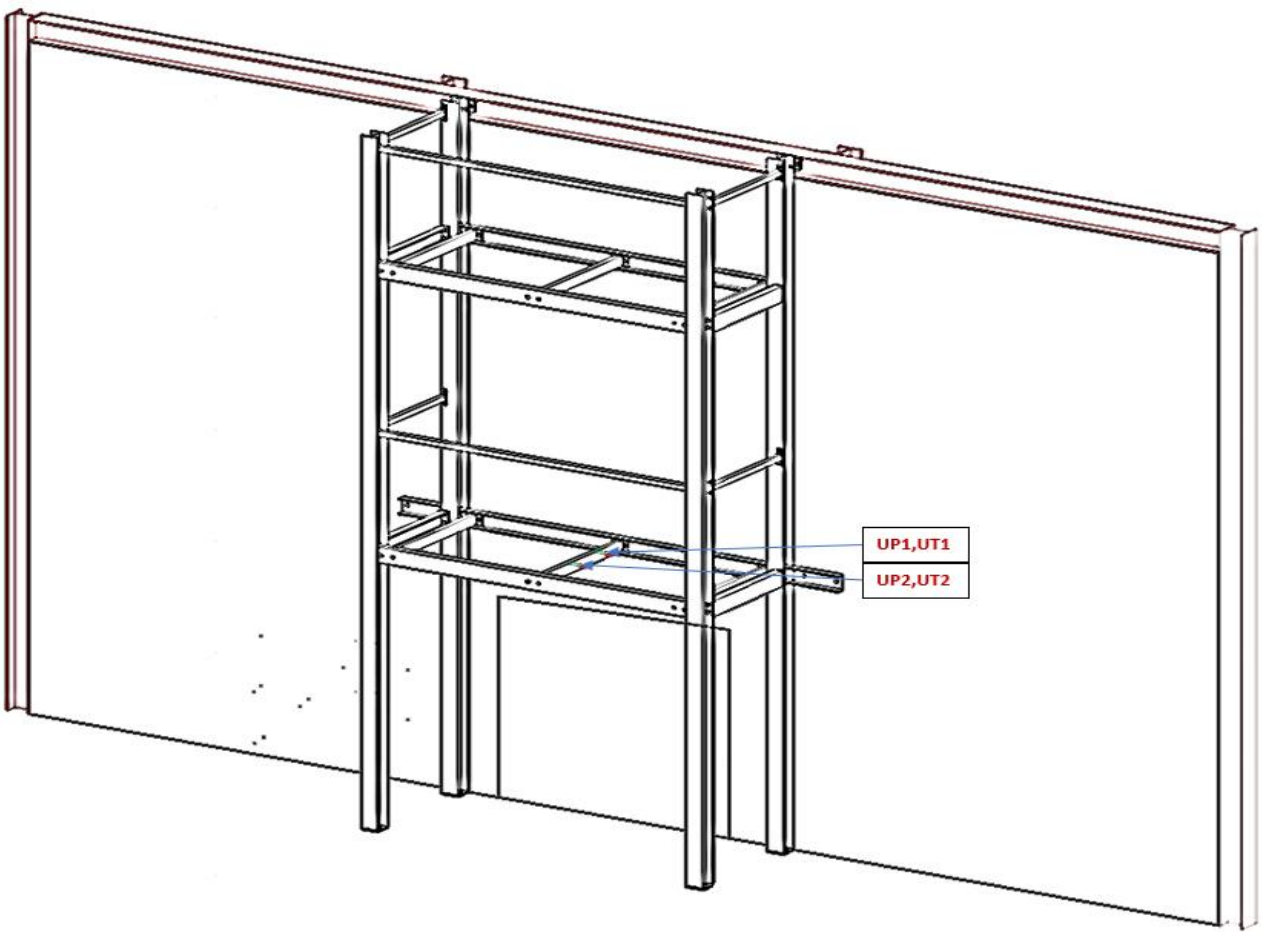

Temperature measured from the Plate TC's on the steel C-section underneath 1st floor

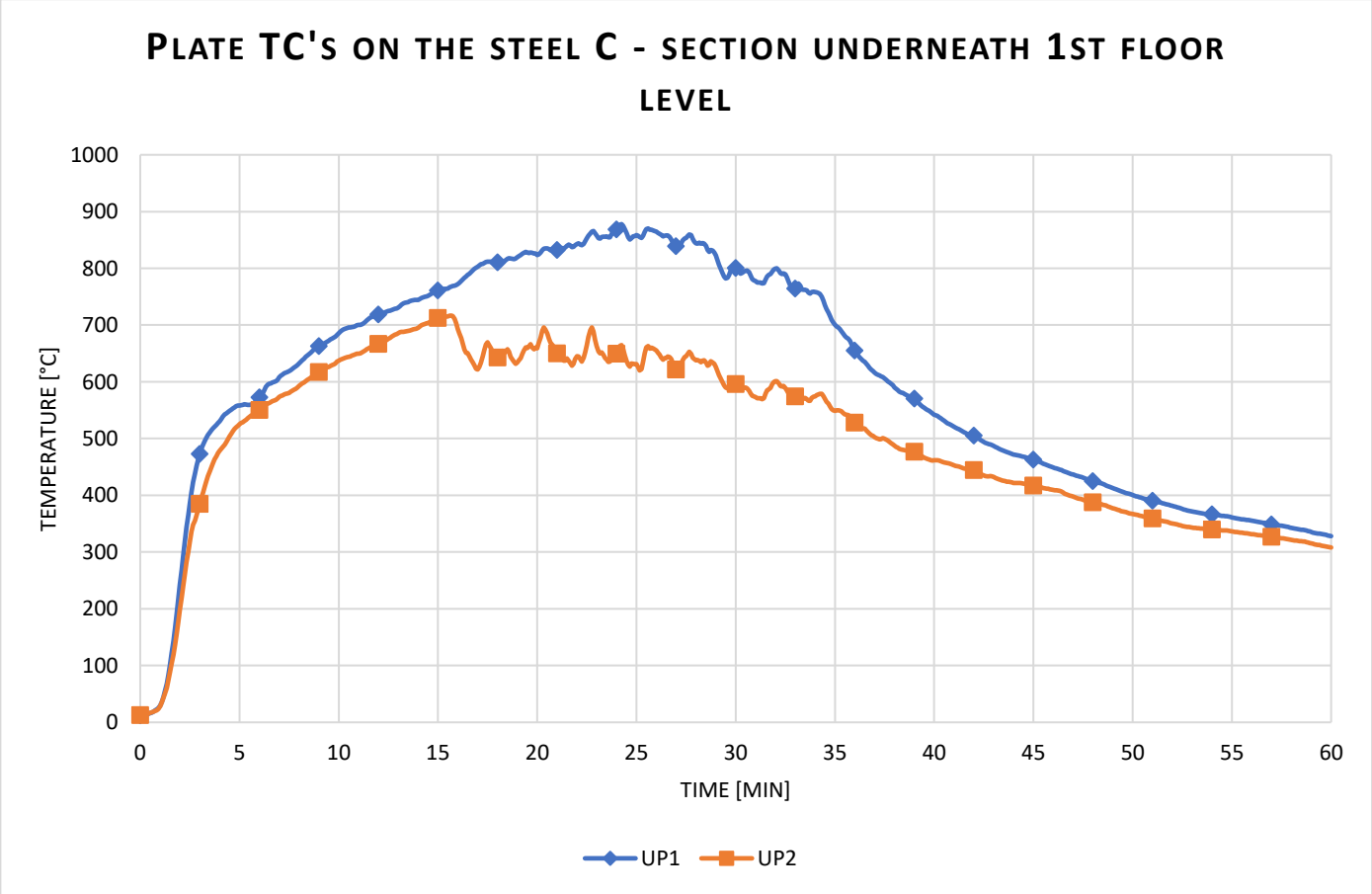

Temperature measured from the Inconels on the steel C-section underneath 1st floor

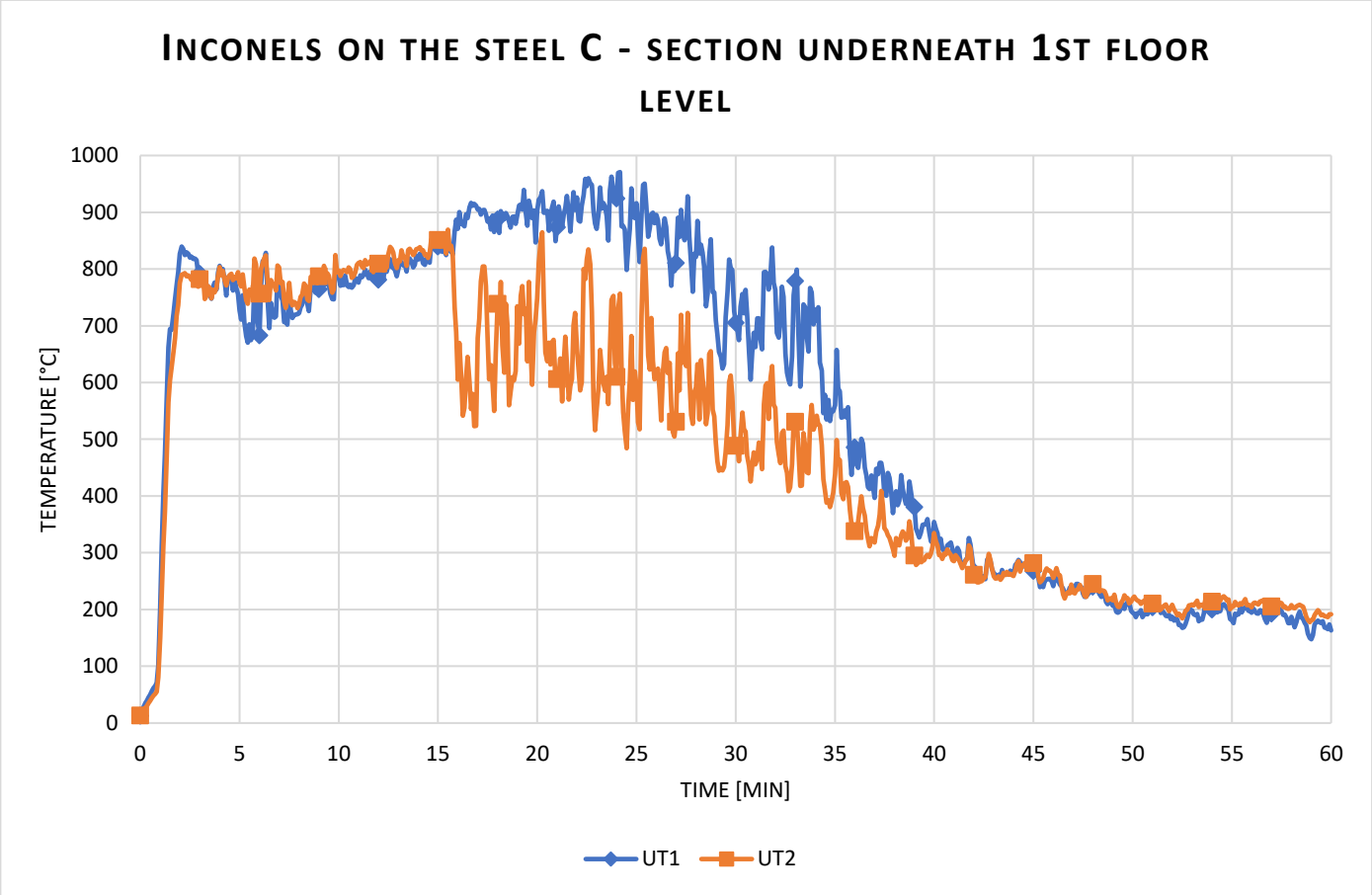

Radiant heat calculated from Plate TC

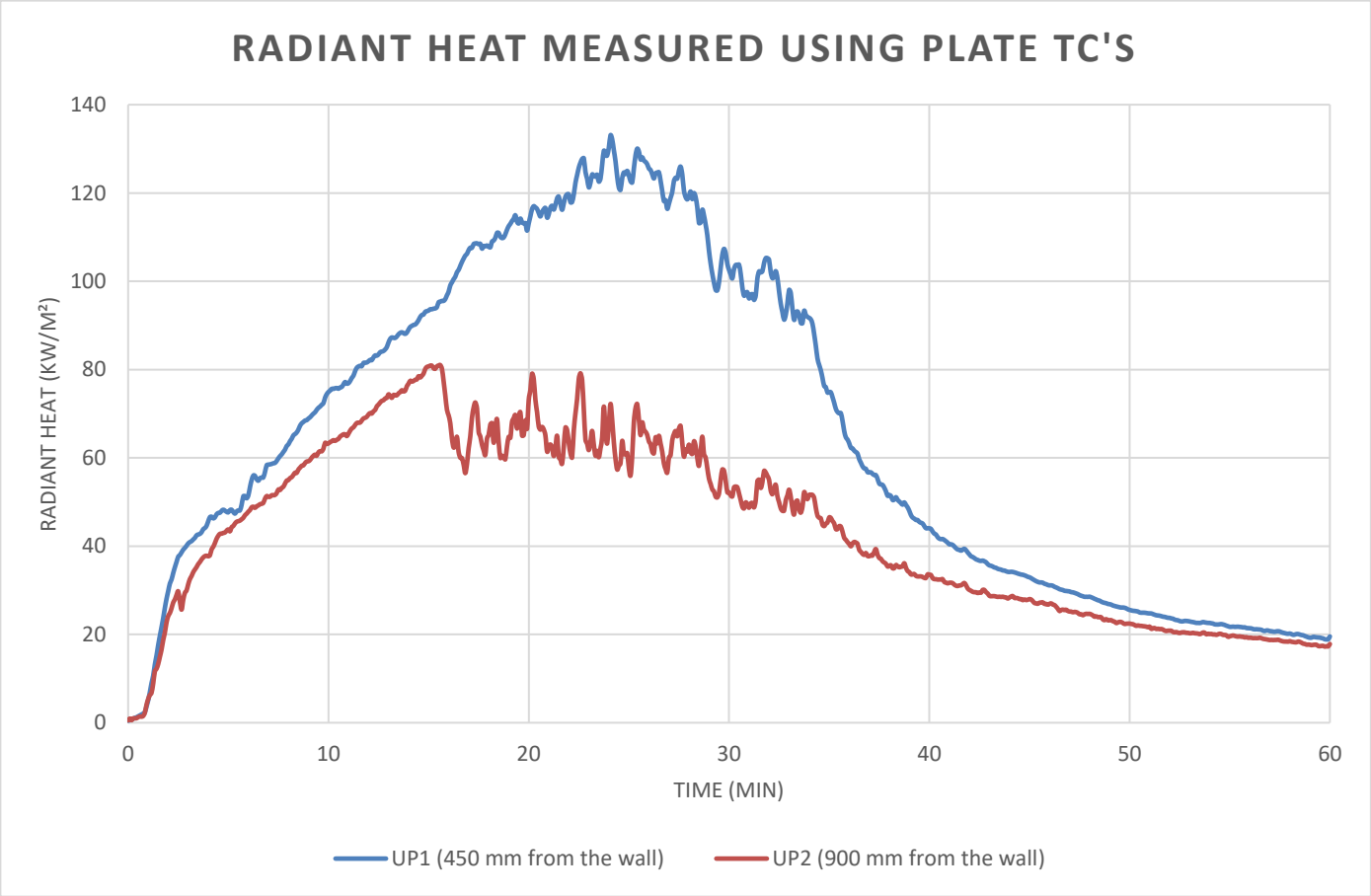

Data measurement from the steel C-section underneath 2nd floor

Layout

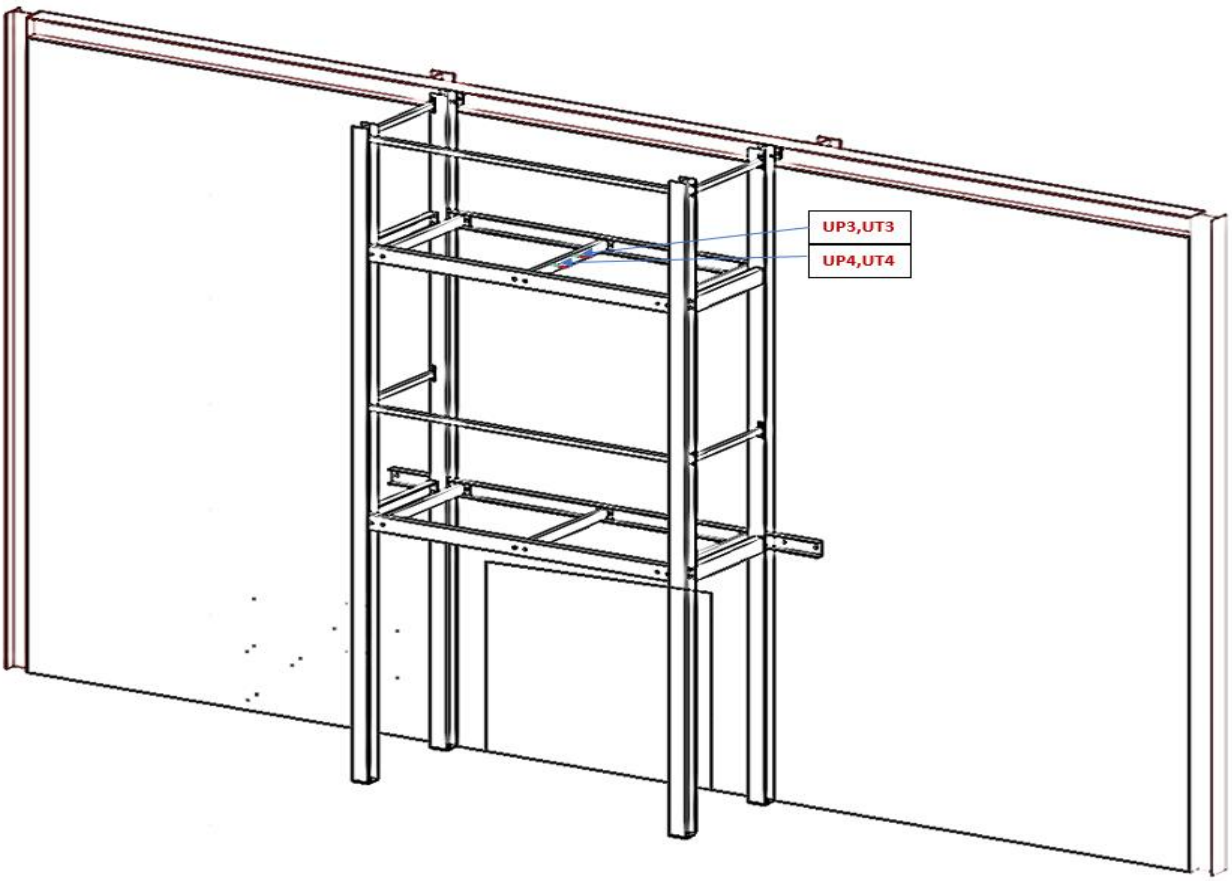

Temperature measured from the Plate TC's on the steel C-section underneath 2nd floor

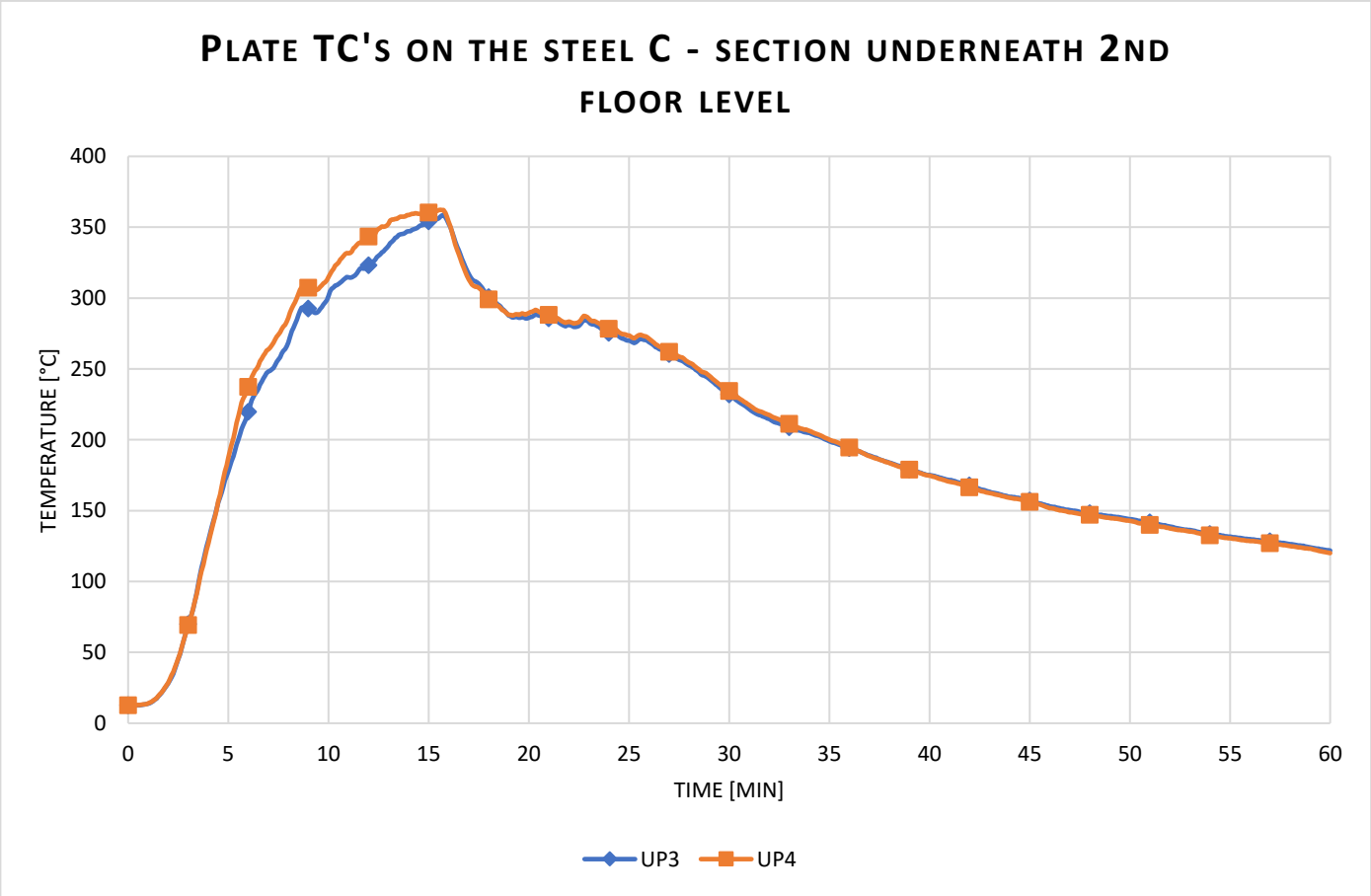

Temperature measured from the Inconels on the steel C-section underneath 2nd floor

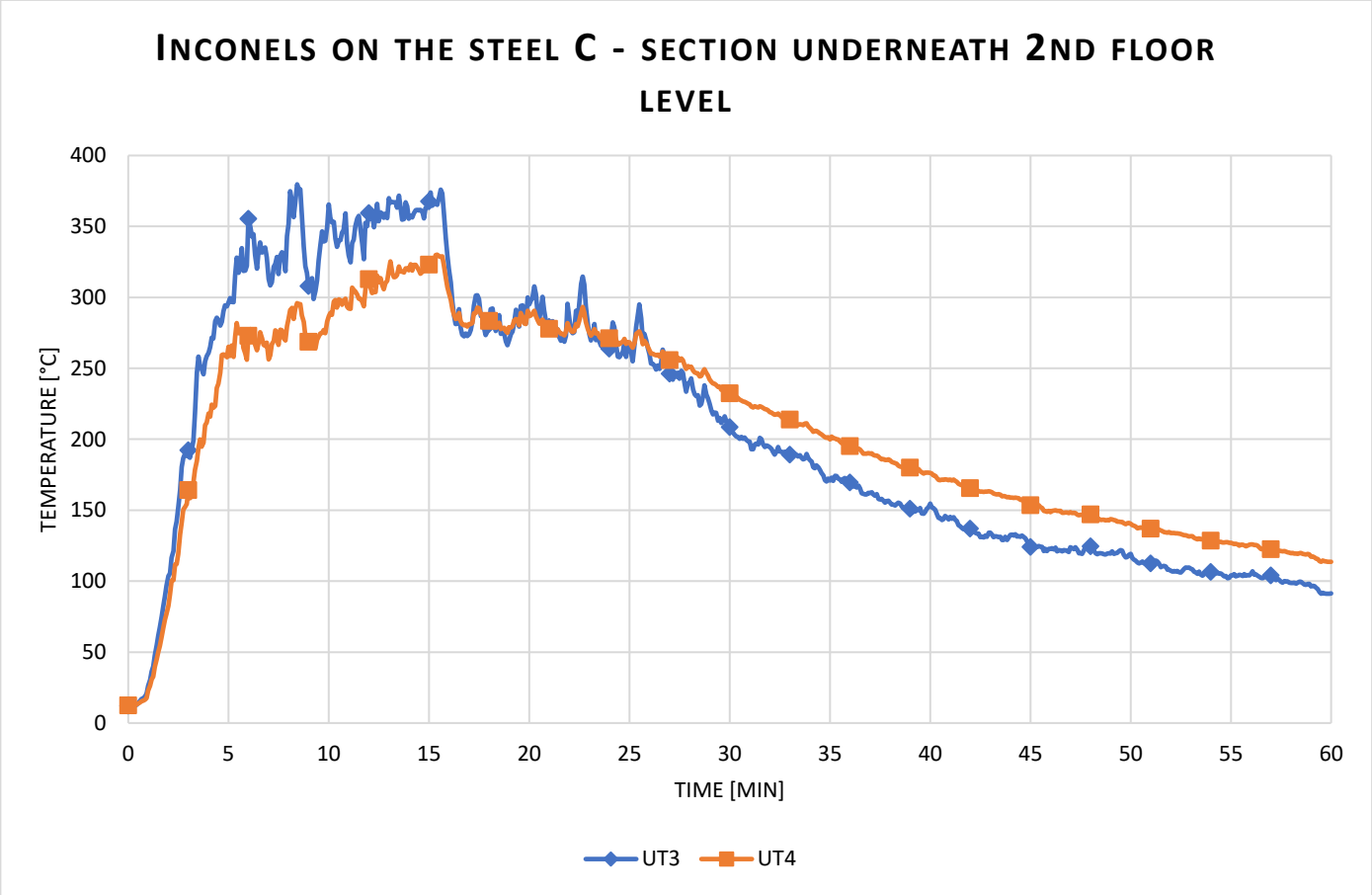

Radiant heat calculated from Plate TC's

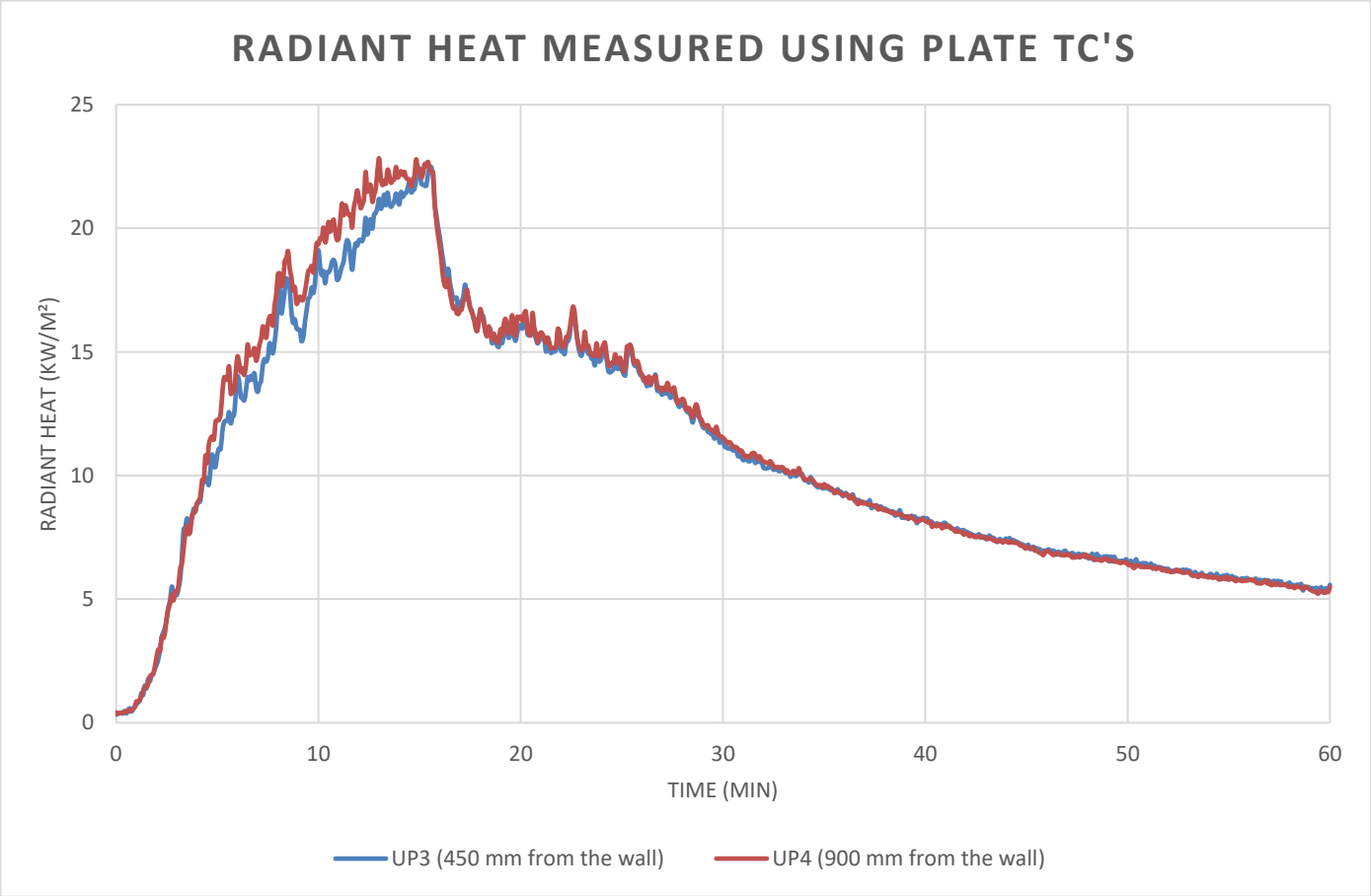

Data measurements from Inconels on side wall

Layout

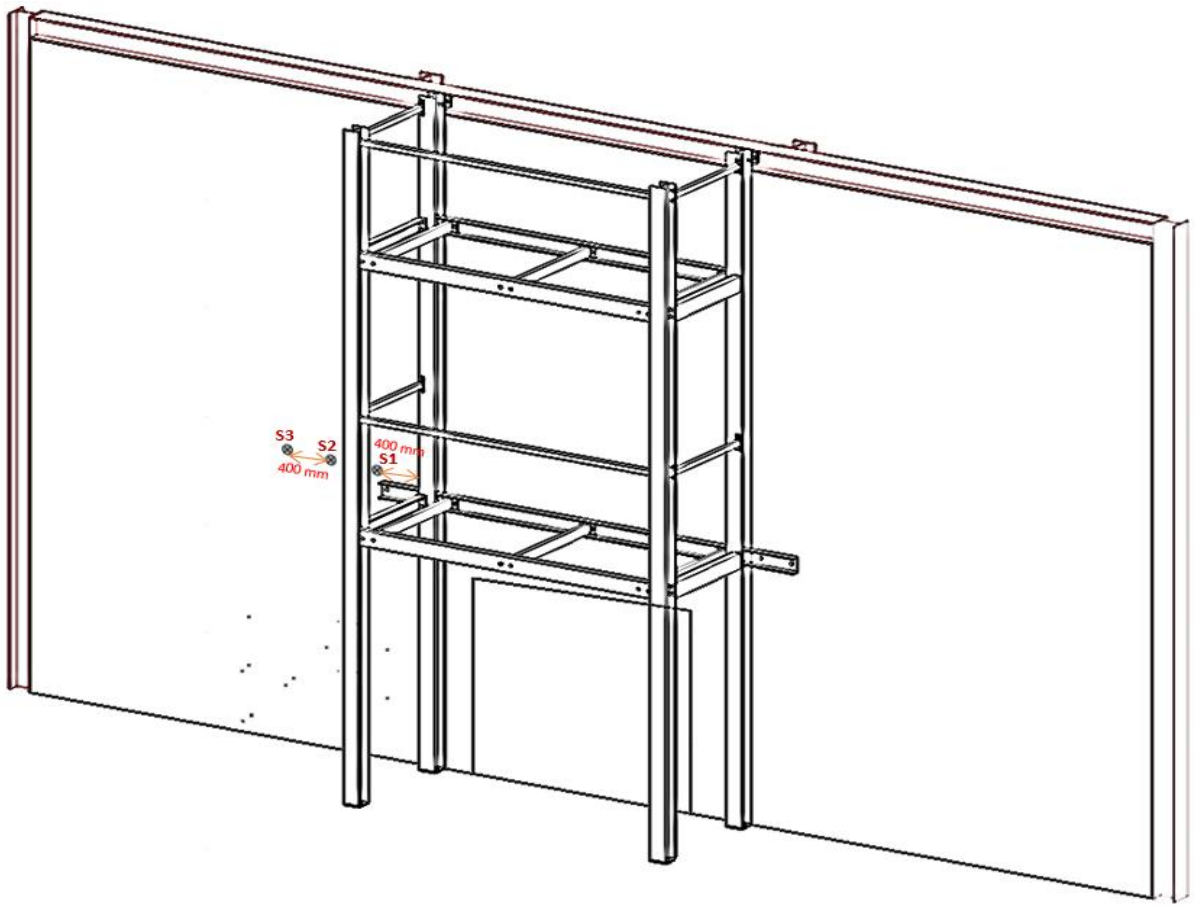

Temperature measured from the Inconels from the side wall – adjacent 1st floor level steel frame

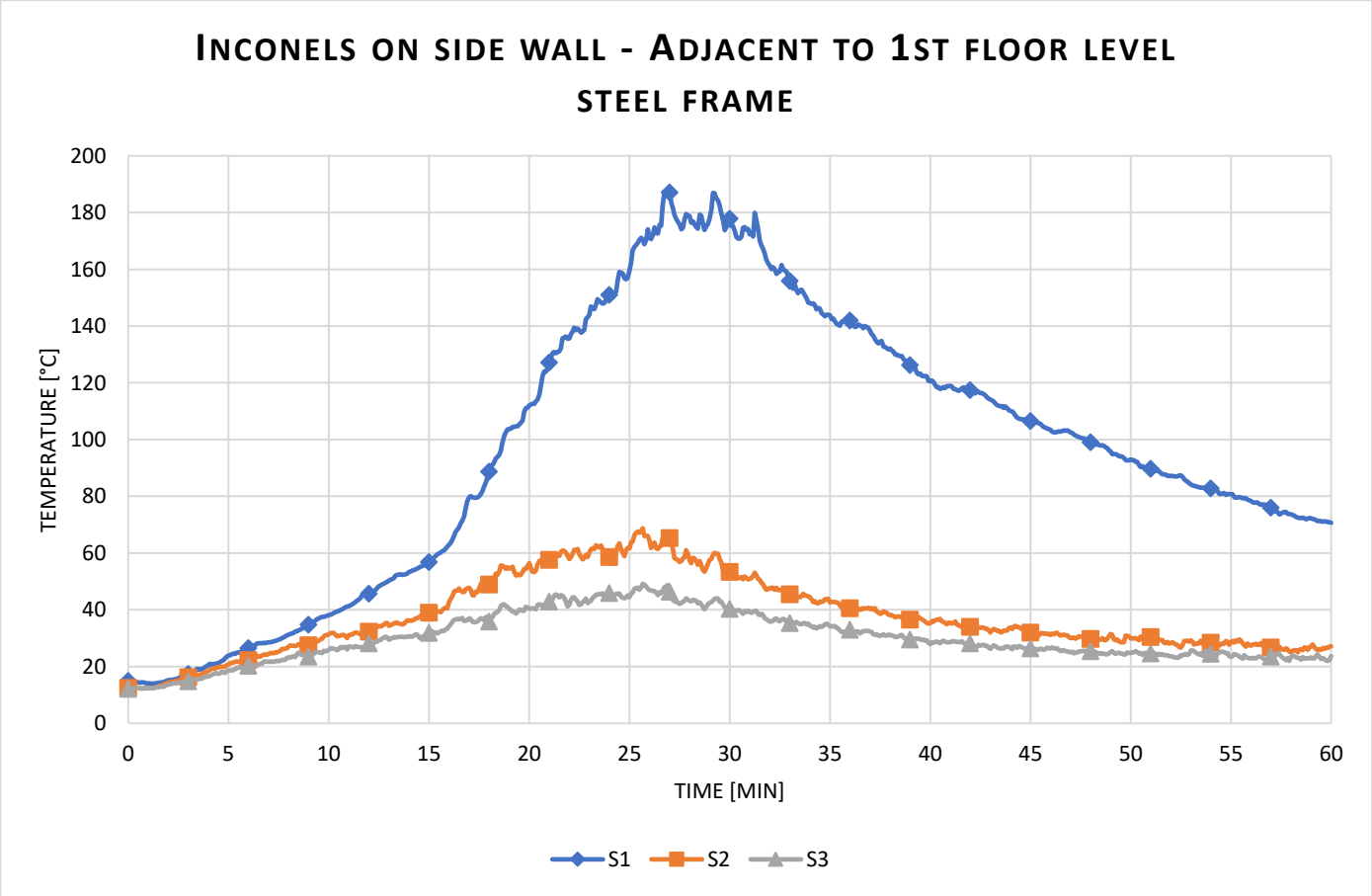

Data measurement from the Inconels on steel C - section

Layout

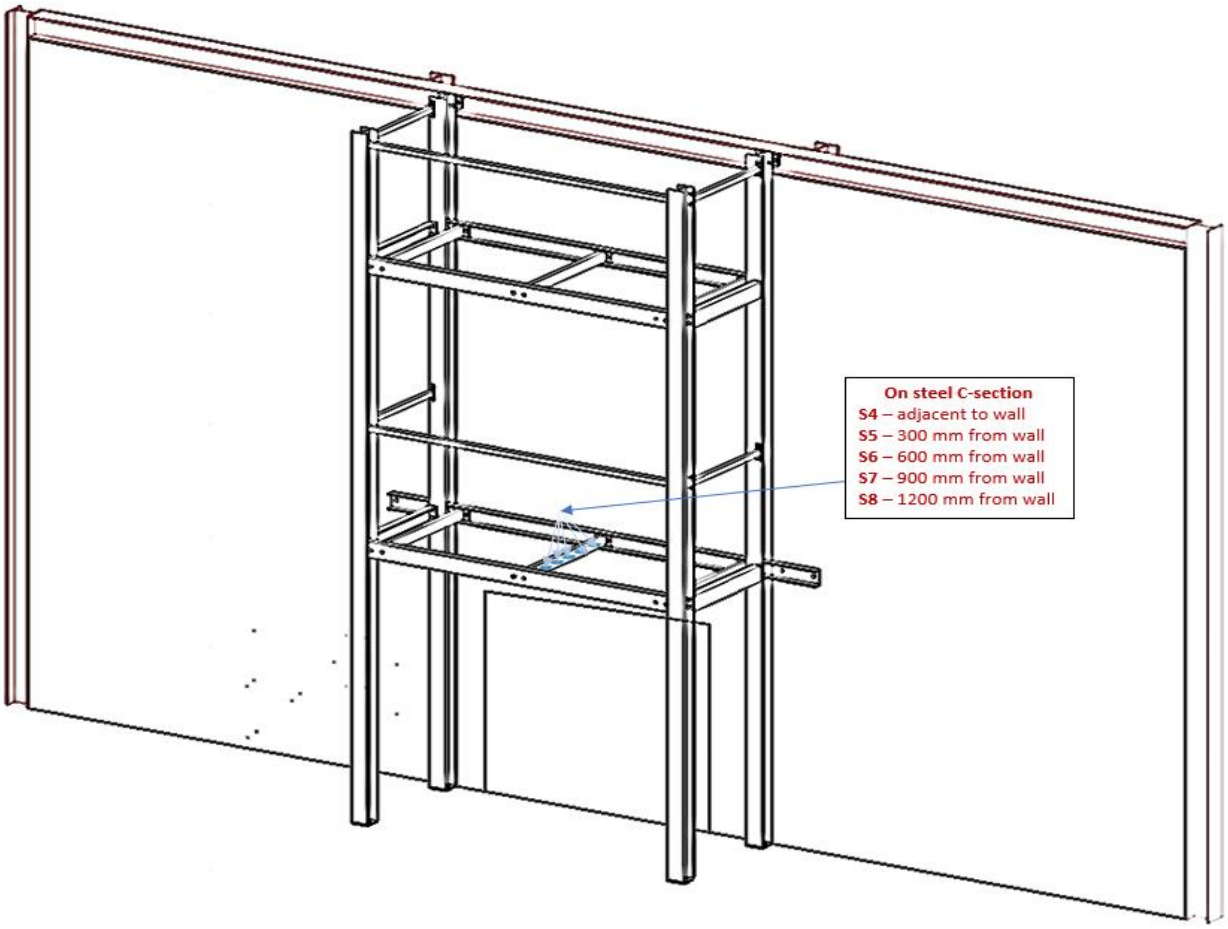

Temperature measured from the Inconels on steel C-section underneath 1st floor

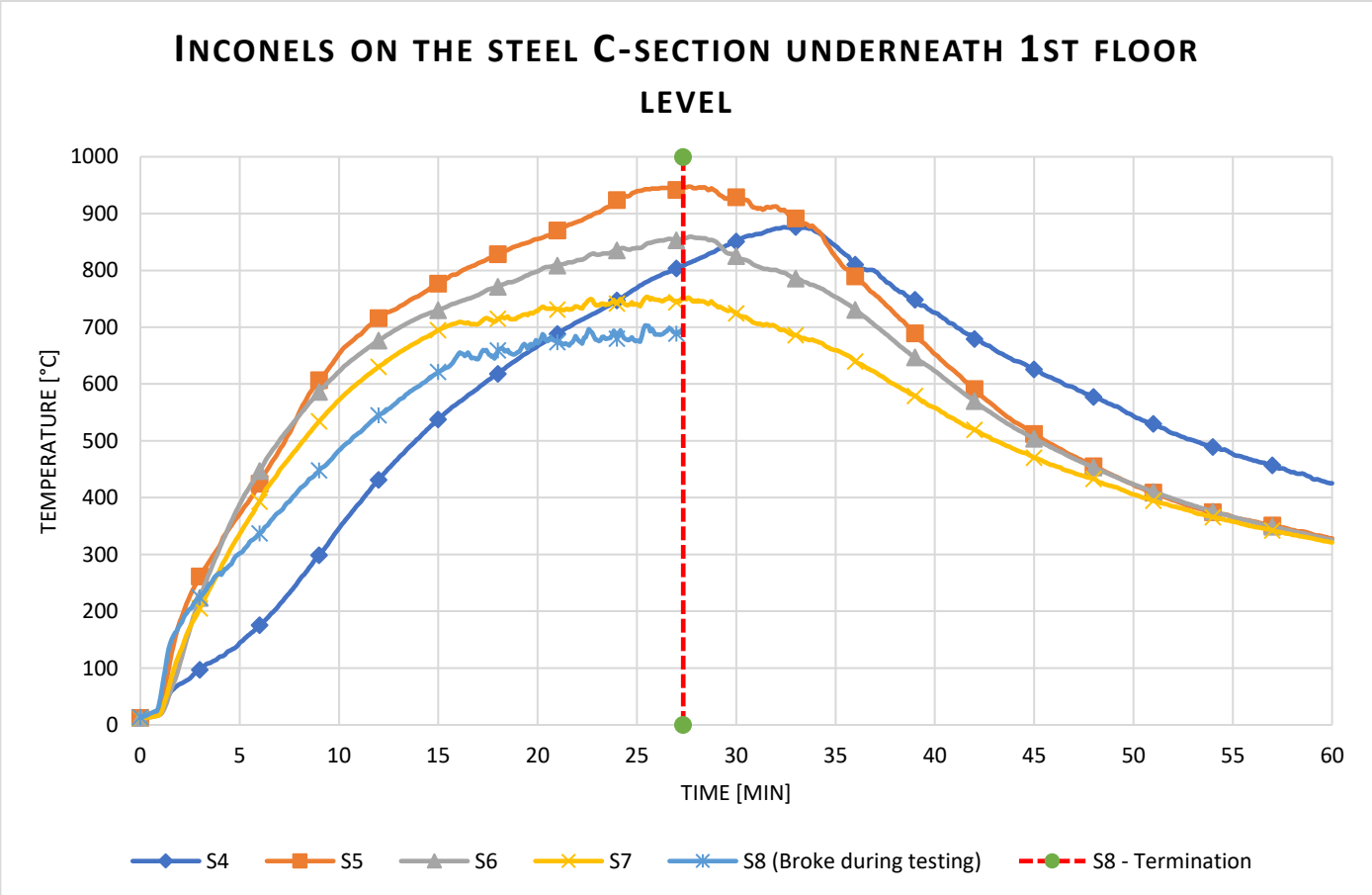

Data measurement from the Inconels facing crib (ground floor)

Layout

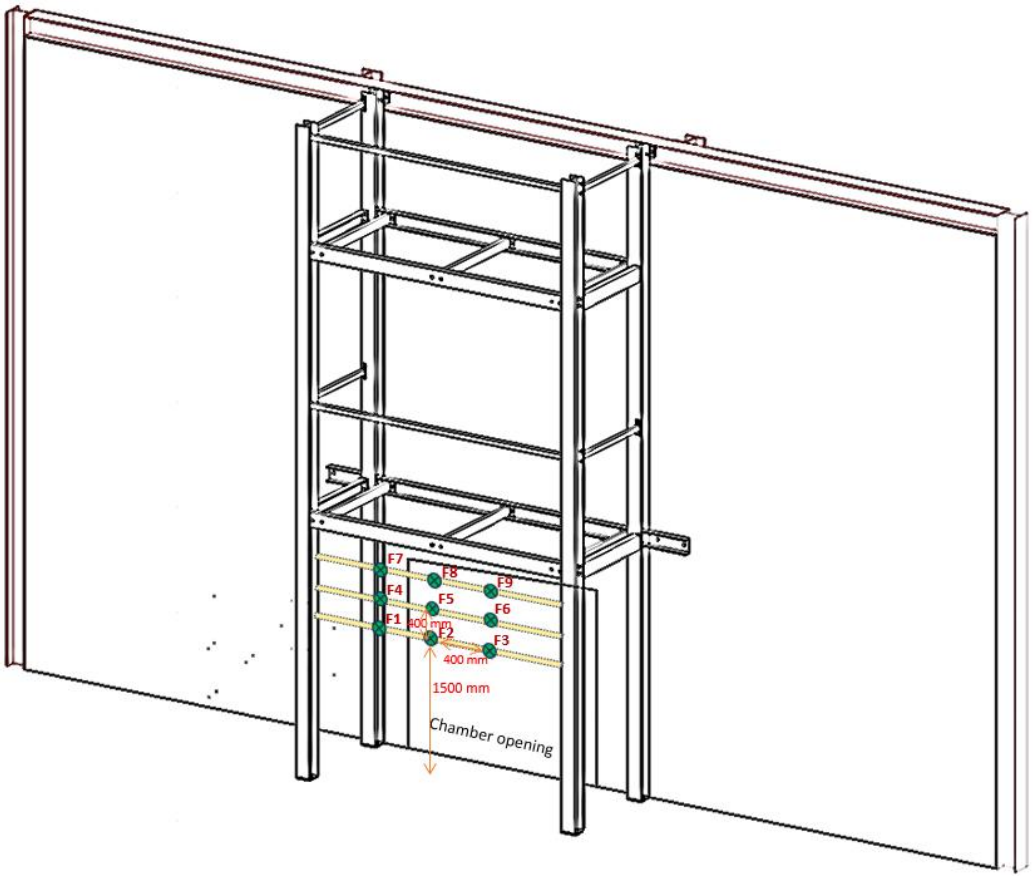

Temperature measured from the Inconels above the handrails facing the crib

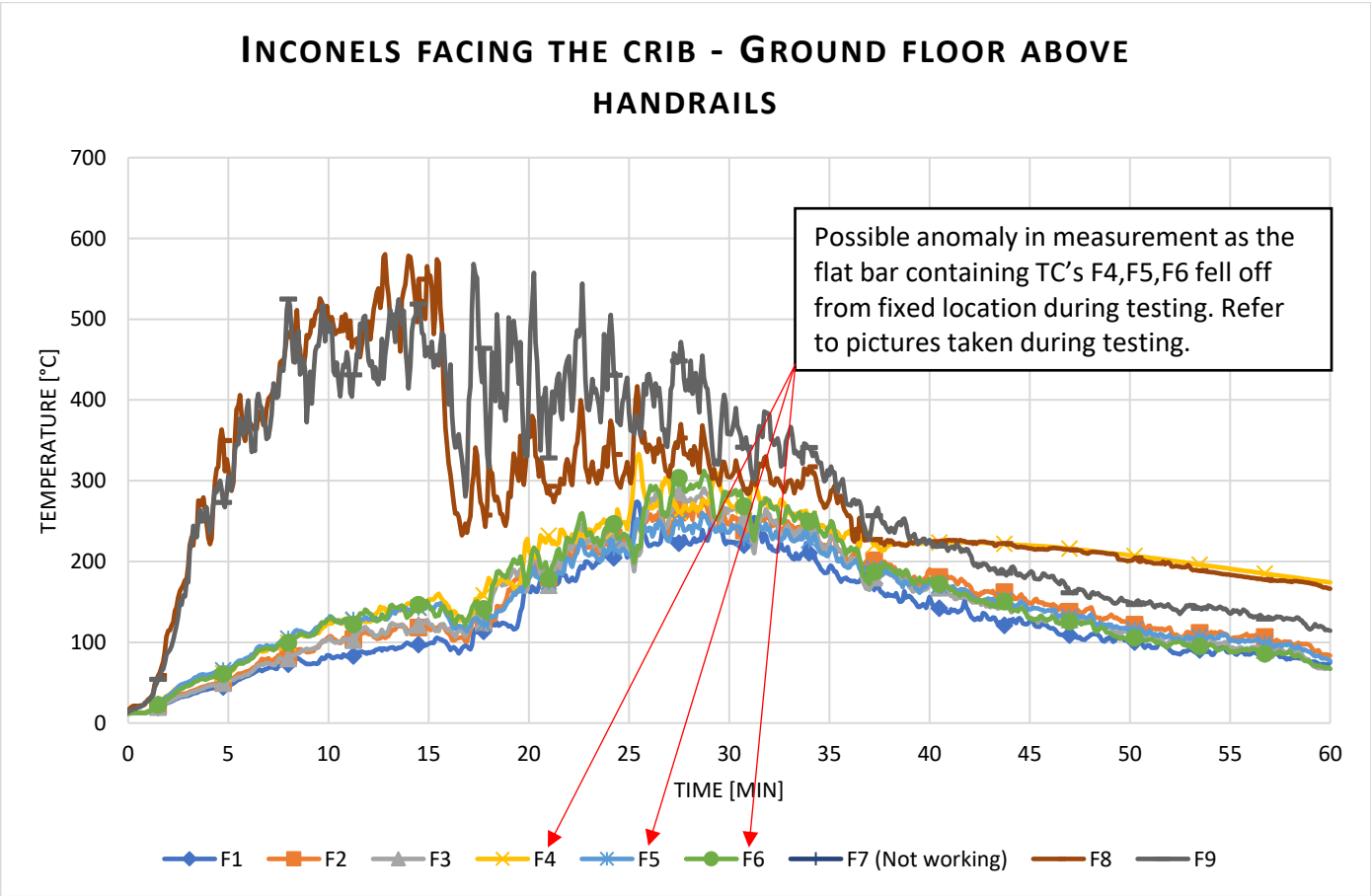

Data measurement from the Inconels on 1st floor

Layout

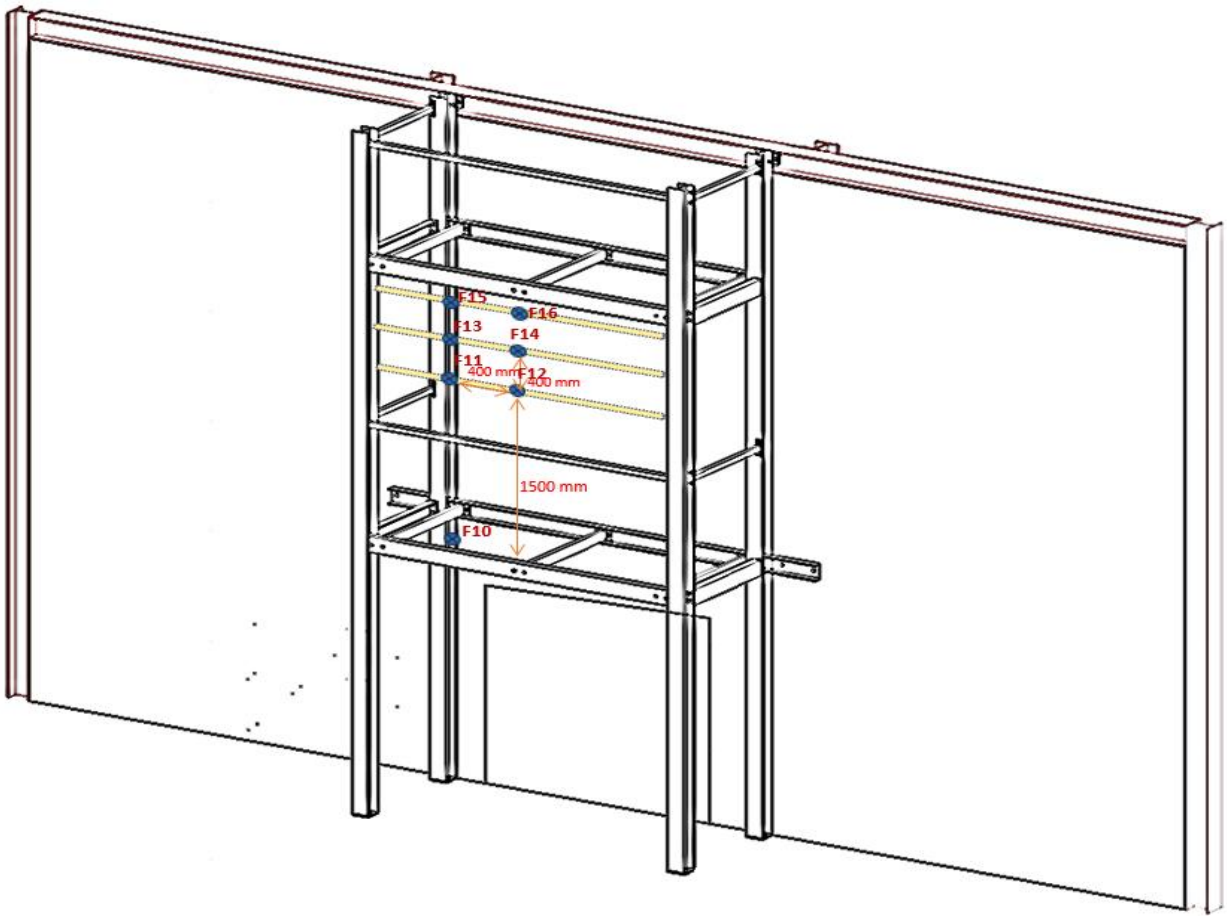

Temperature measured from the Inconels facing outwards on 1st floor on floor and above handrails

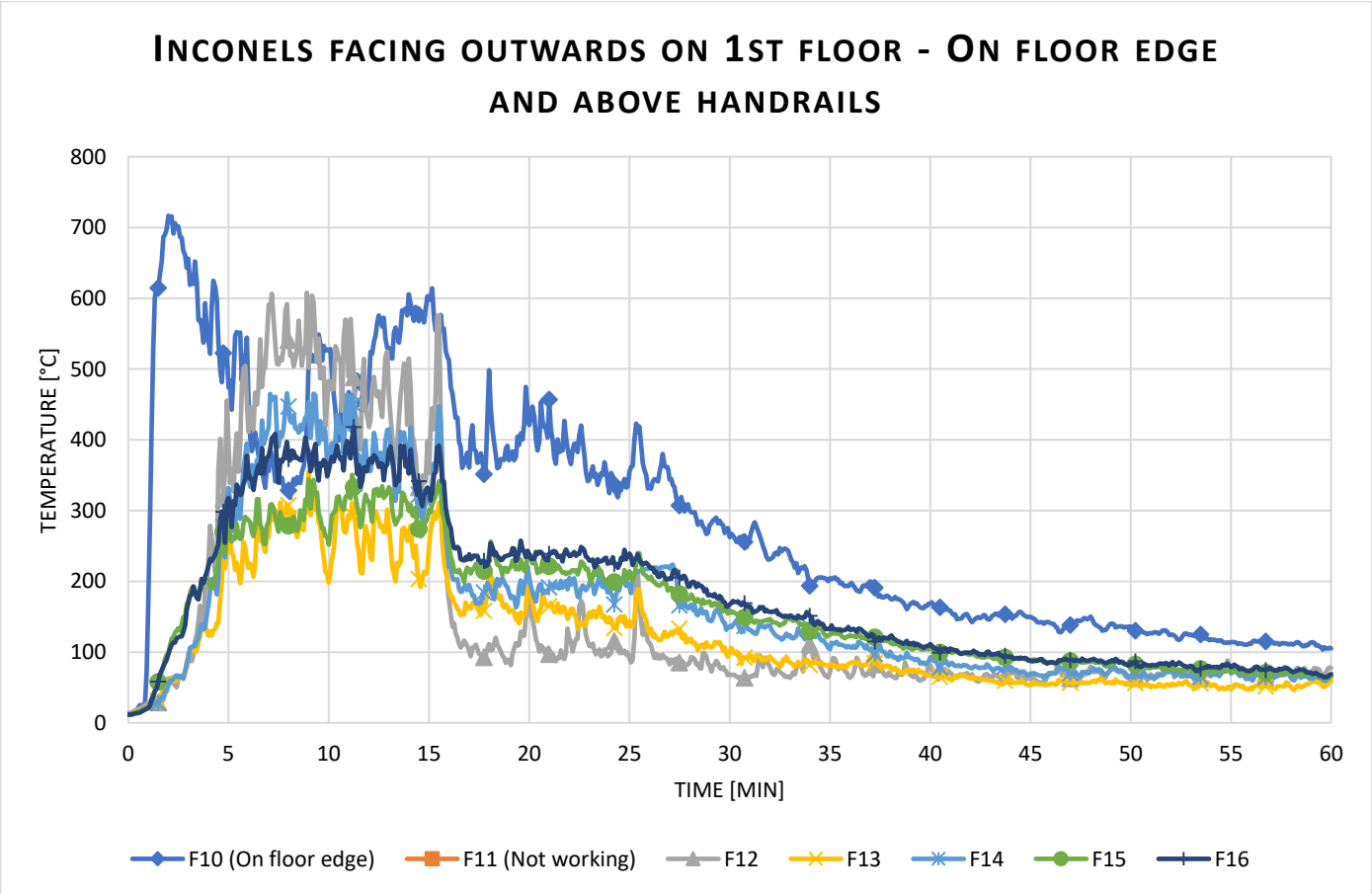

Data measurement from the Inconels on 2nd floor

Layout

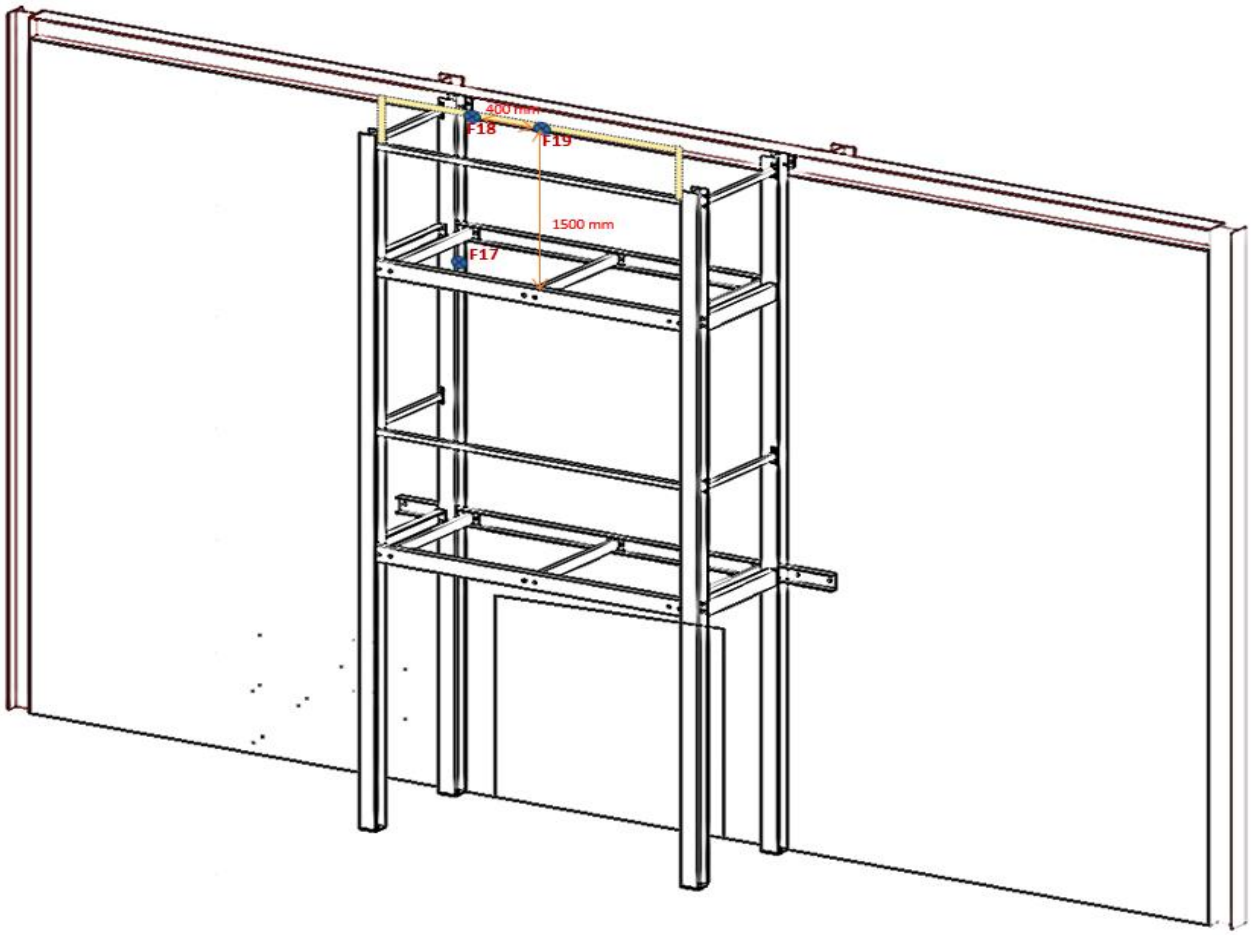

Temperature measured from the Inconels facing outwards on 2nd floor on floor and above handrails

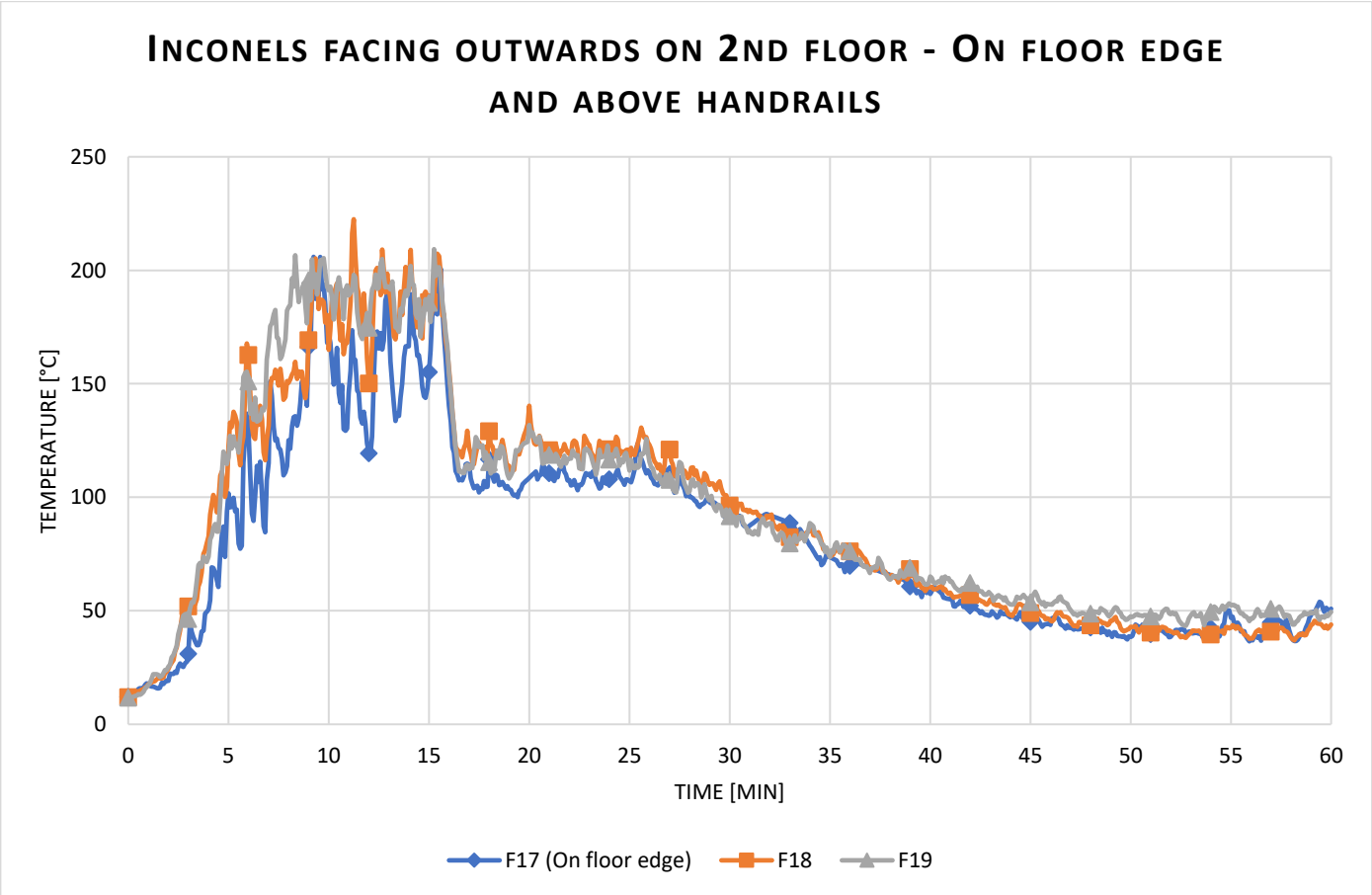

3. PICTURES TAKEN DURING THE TEST

0:02:15

0:04:11
DATE:- 27/11/2023

0:16:28

0:22:18

0:30:26

0:38:11

0:45:25

01:00:25

Test date: 12th of December 2023

Project Nr: EUI-23-000746

Test Nr: EUI-23-CHB-000746C

1. INSTRUMENTATION LAYOUT

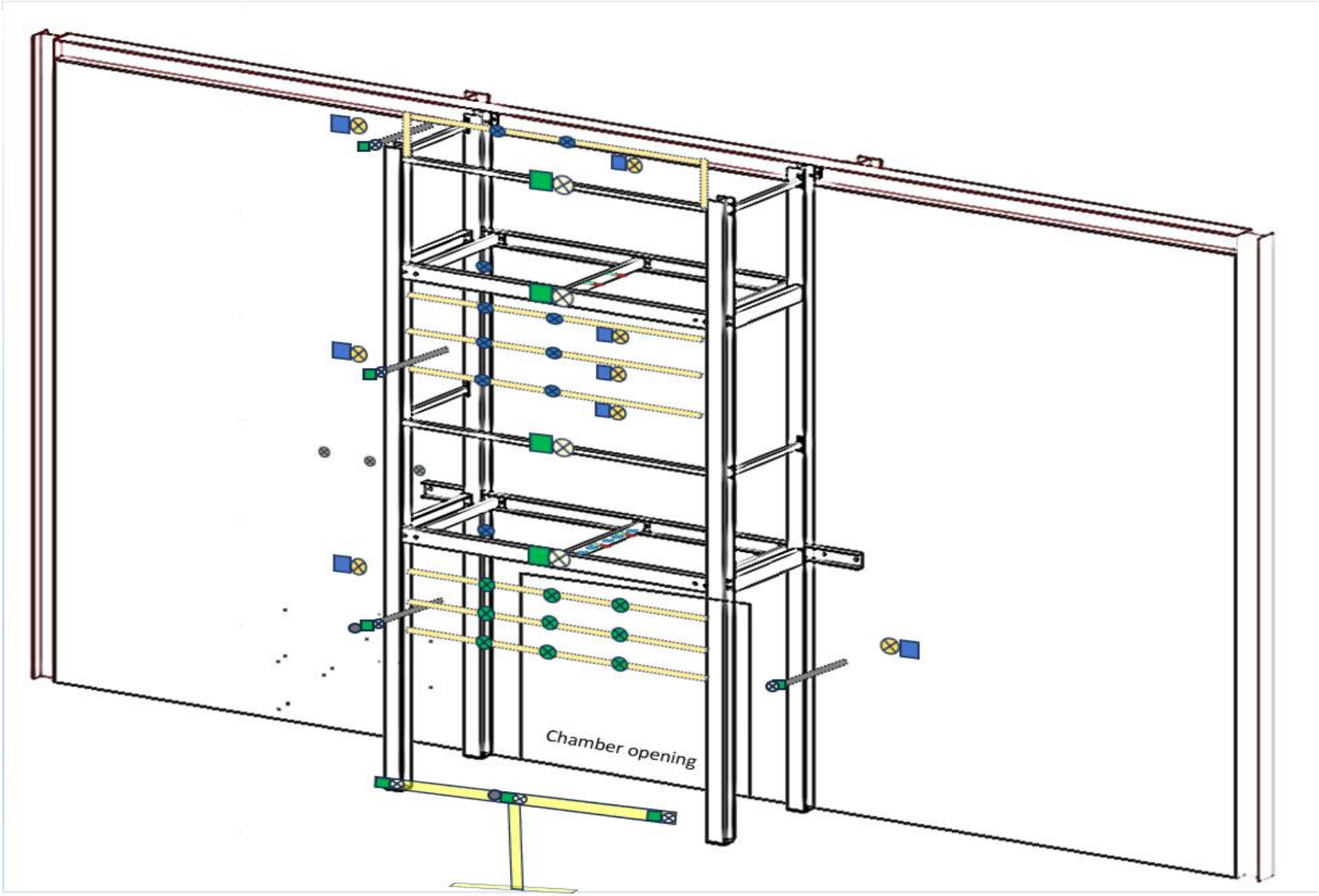

Plate TC on exposed face

Inconel TC on exposed face

Inconel TC on wall

Plate TC on wall

Heat flux meter

2x Plate TC's underside the Balcony floor –
At 450 mm and 900 mm from the wall

2x Inconel TC's underside the Balcony floor –
At 450 mm and 900 mm from the wall

3m long TC facing outwards,
extends out by 50 mm

TC on the steel C-section
S4 – exposed edge of wall
S5 – 300mm away from the wall
S6 – 600mm away from the wall
S7 – 900mm away from the wall
S8 – 1200mm away from the wall

3m long TC facing the crib,
extends out by 50 mm

Nomenclature:

The first word of each acronym is to identify their position:

G - Ground floor

S – Side edge to the chamber opening

M – Middle floor

T – Top floor

F – Front facing Inconels

The second word denotes the instrument:

Fluxmeter (R), Plate TC (P), Inconel (T)

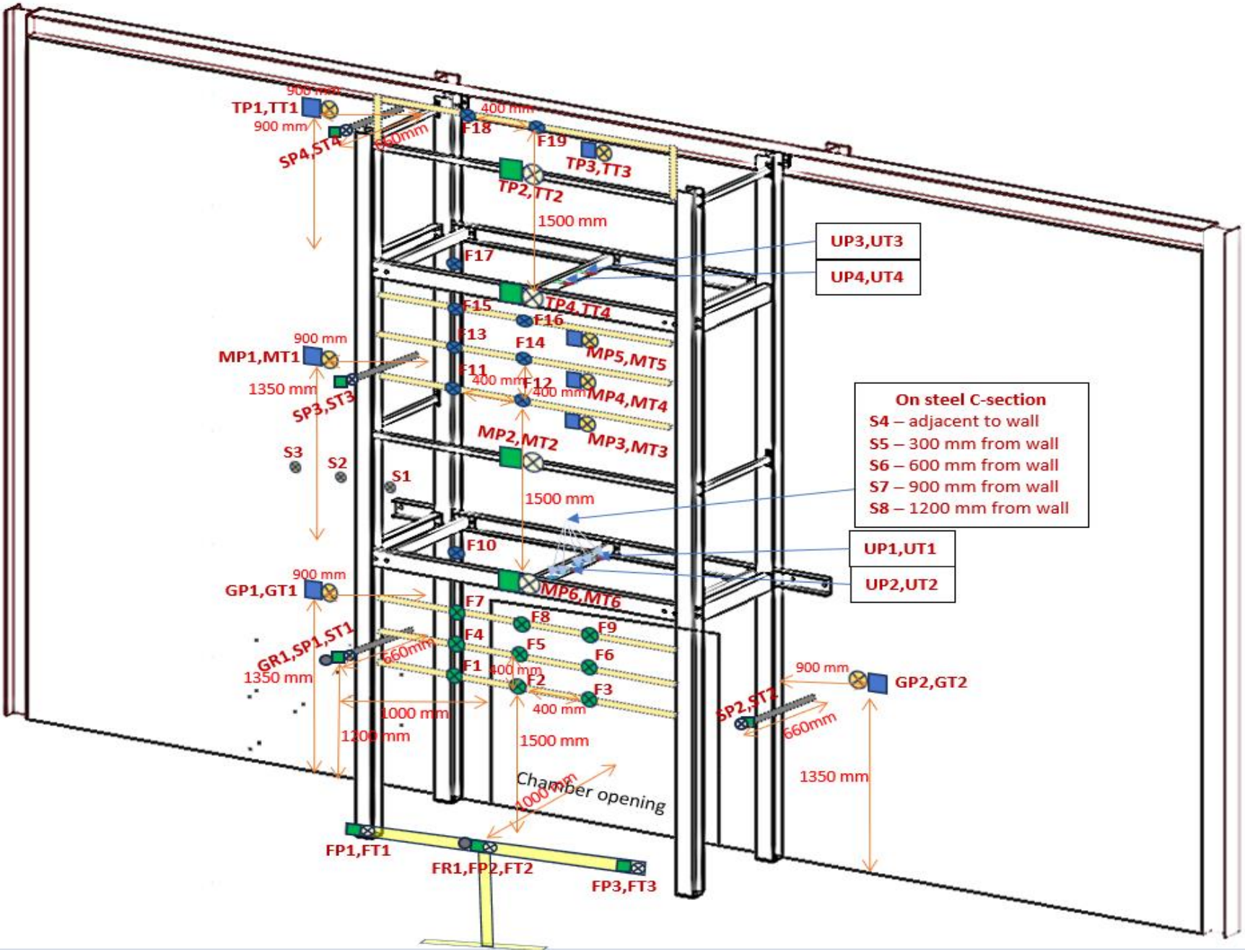
TP1,TT1
900 mm
SP4,ST4
660mm
400 mm
F18
F19
TP3,TT3
TP2,TT2
1500 mm
F17
UP3,UT3
UP4,UT4
TP4,TT4
F15
F16
F13
F14
MP5,MT5
900 mm
MP1,MT1
F11
400 mm
F12
400 mm
MP4,MT4
1350 mm
SP3,ST3
MP3,MT3
MP2,MT2
S3
S2
S1
1500 mm
On steel C-section
S4 – adjacent to wall
S5 – 300 mm from wall
S6 – 600 mm from wall
S7 – 900 mm from wall
S8 – 1200 mm from wall
F10
UP1,UT1
UP2,UT2
900 mm
GP1,GT1
MP6,MT6
F7
F8
F9
F4
F5
F6
GR1,SP1,ST1
660mm
F1
400 mm
F2
F3
1350 mm
900 mm
GP2,GT2
SP2,ST2
660mm
1000 mm
400 mm
1200 mm
1500 mm
1350 mm
Chamber opening
1000 mm
FP1,FT1
FR1,FP2,FT2
FP3,FT3

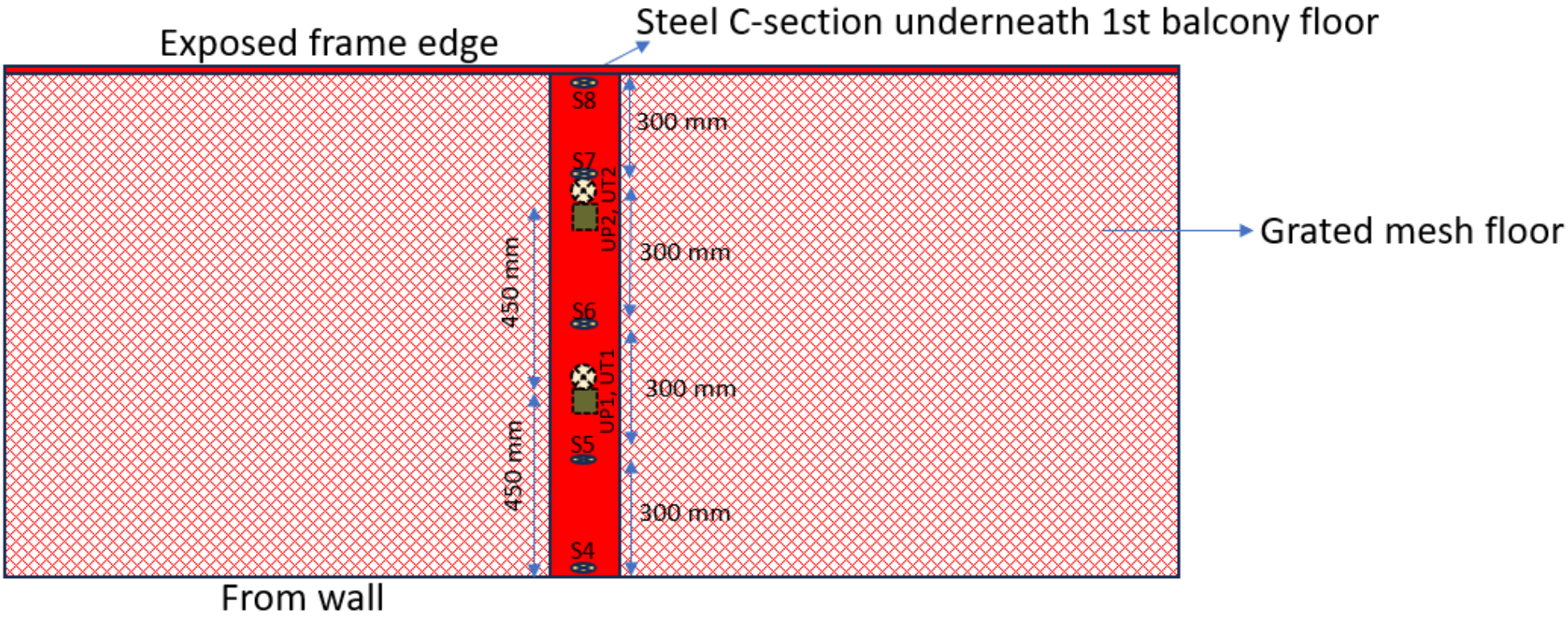

S4 – 10 mm from the wall on Steel C section to measure steel temperature
S5 – 300 mm from the wall on Steel C section to measure steel temperature
S6 – 600 mm from the wall on Steel C section to measure steel temperature
S7 – 900 mm from the wall on Steel C section to measure steel temperature
S8 – 1200 mm from the wall on Steel C section to measure steel temperature

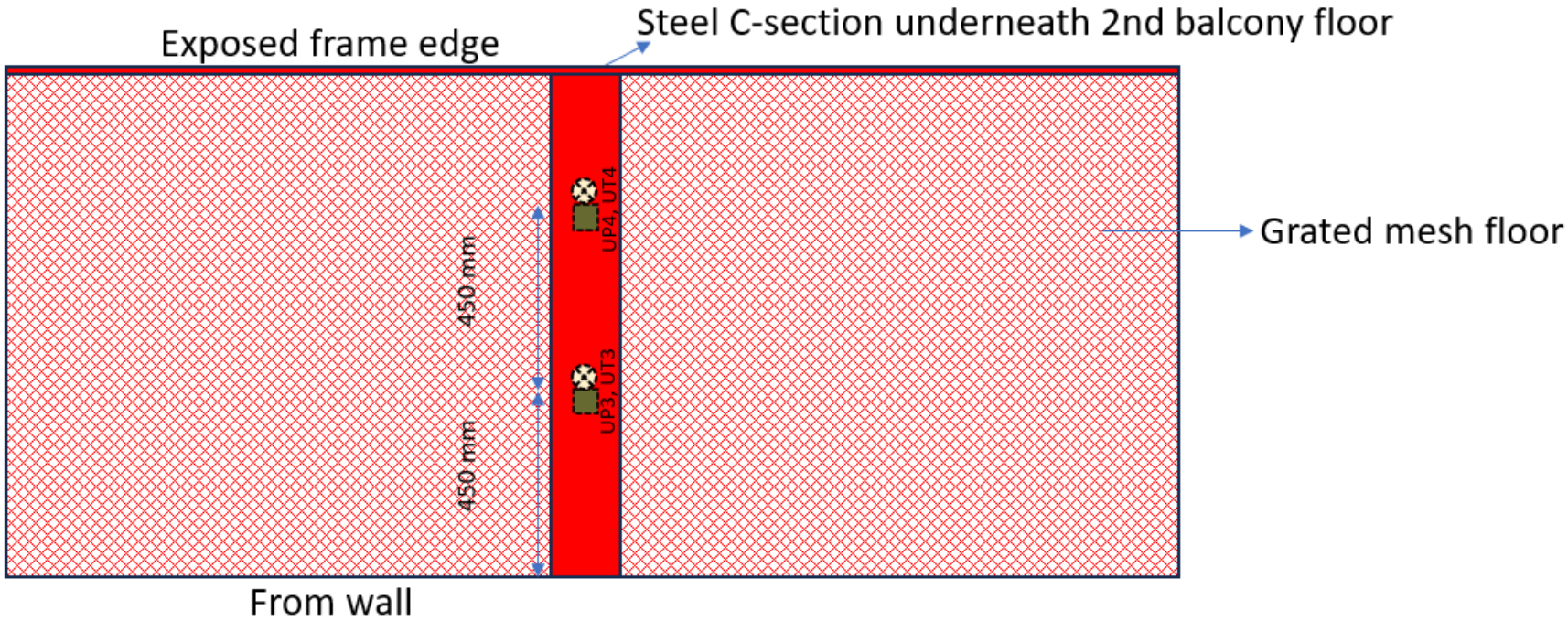
Exposed frame edge
Steel C-section underneath 2nd balcony floor
Grated mesh floor
450 mm
450 mm
UP4, UT4
UP3, UT3
From wall

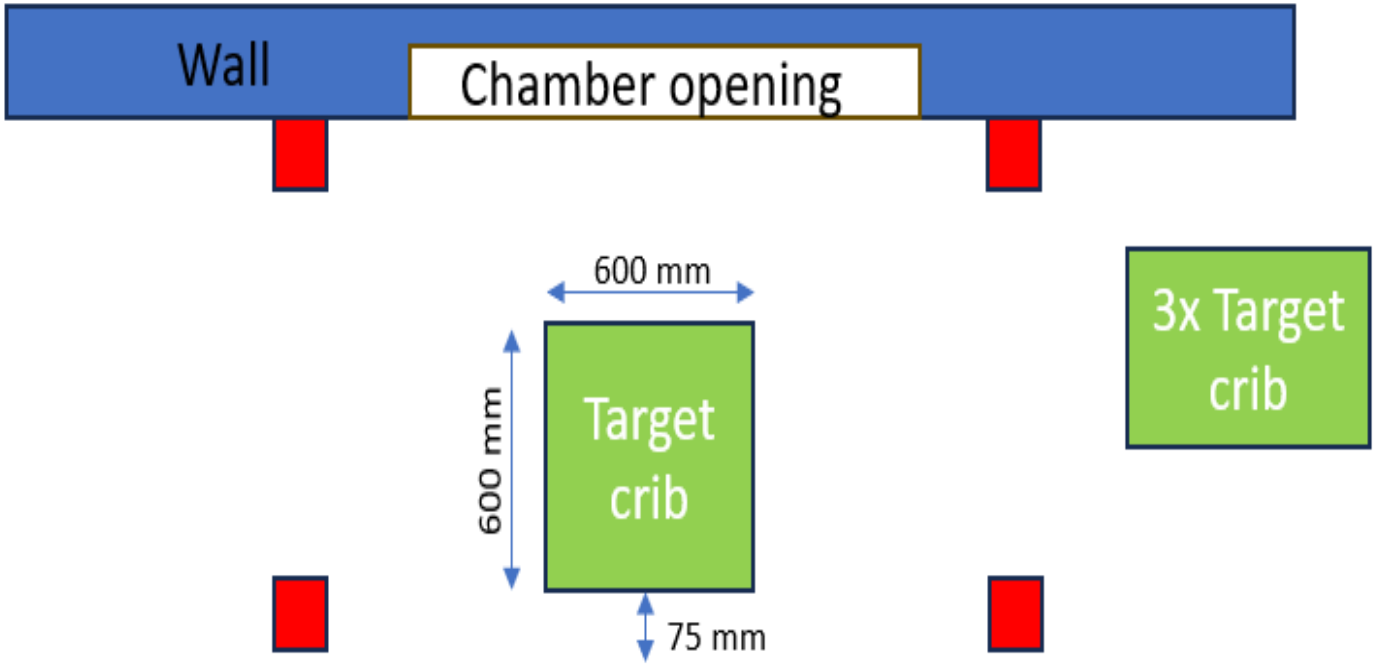

On each floor
(Ground, 1st and 2nd floor)
Installed at a distance of
75 mm
away from the exposed edge.

Figure 1: Elevation view of the system before test.

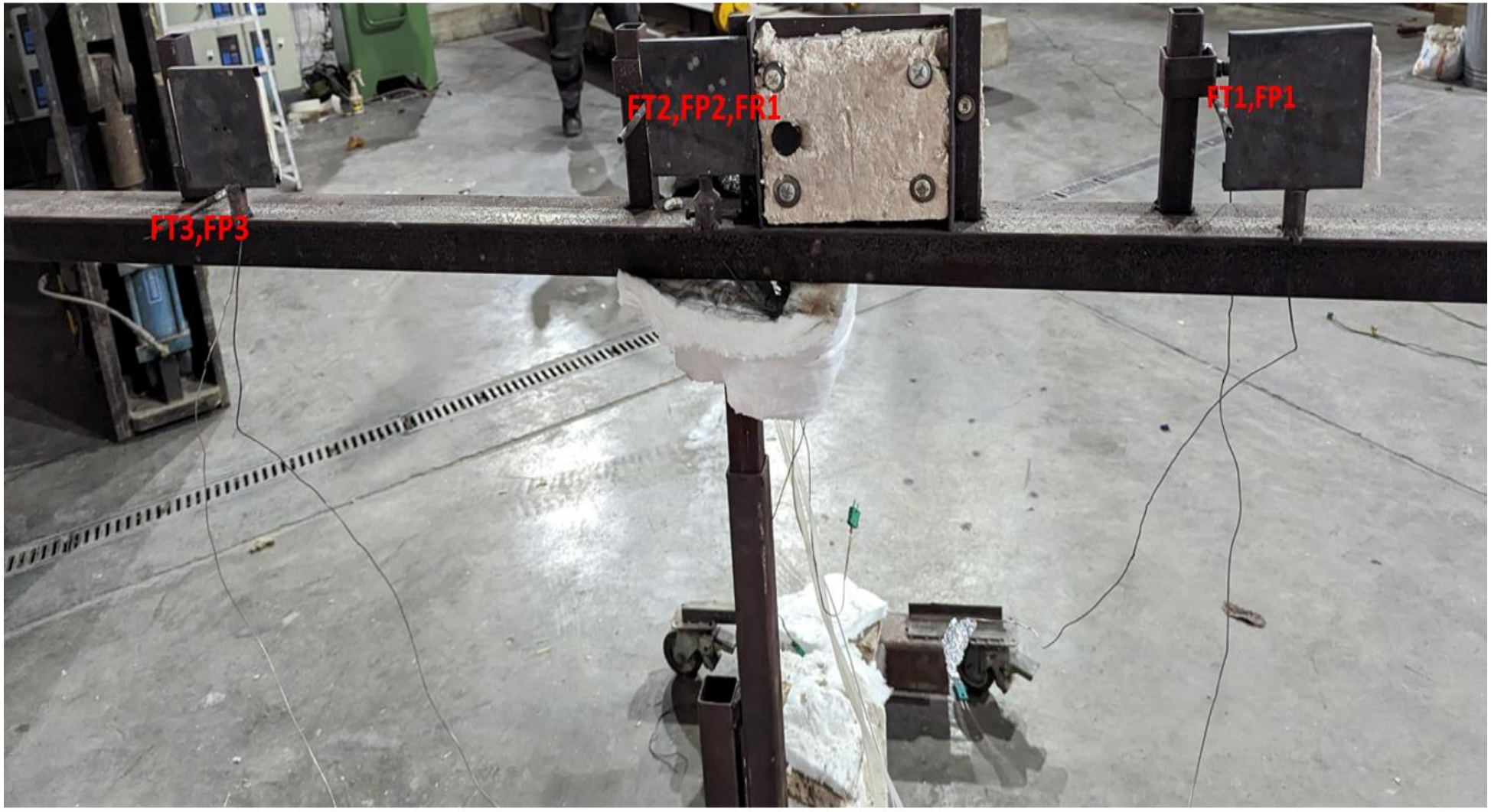

Figure 2: The front facing Fluxmeter, Plate TC's and Inconels (placed 1m away from the target crib).

2. DATA RESULTS

Heat Release rate (Hood)

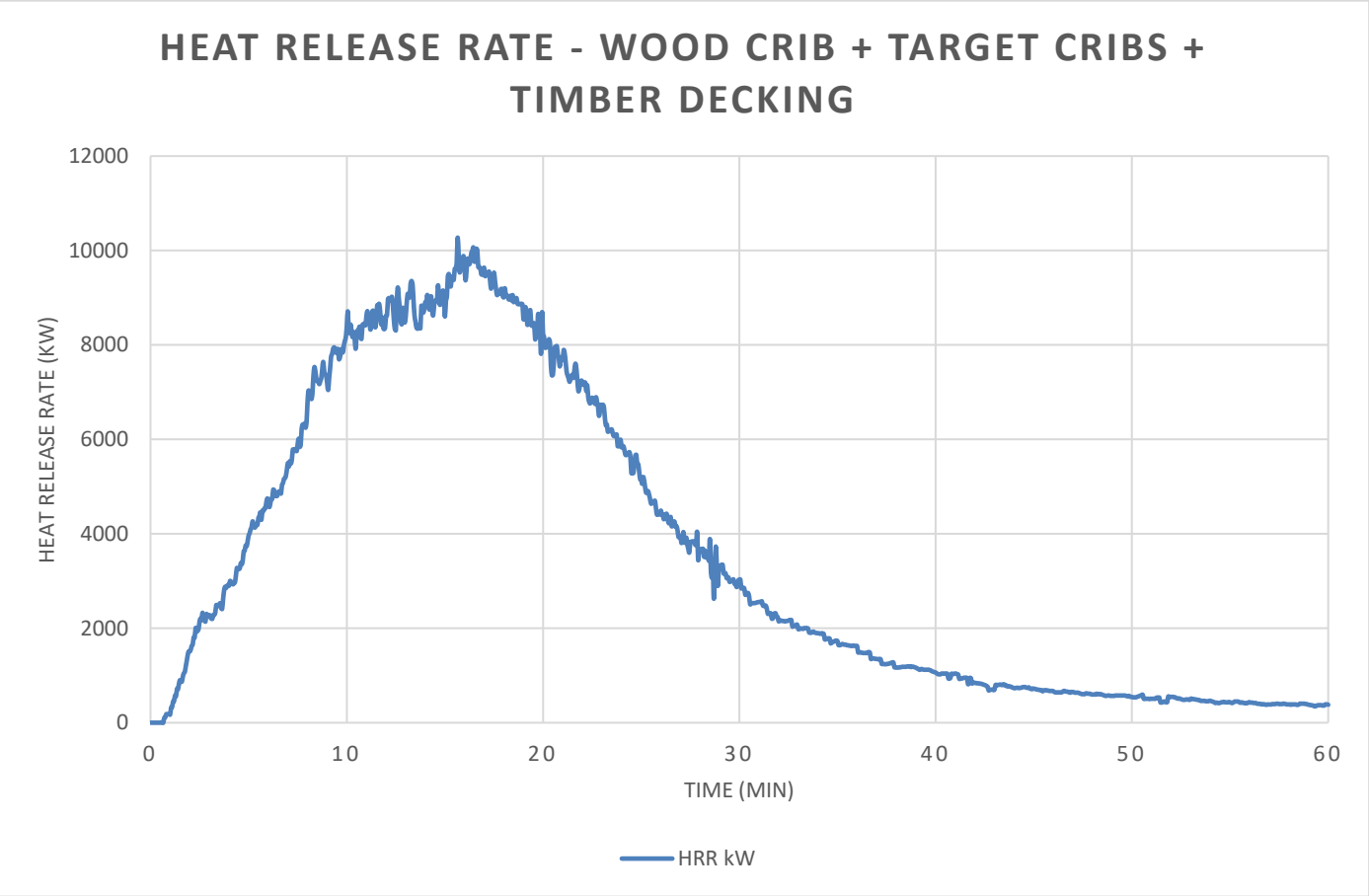

Mass loss

No Mass loss was recorded during this test.

Data measurement at 1m from target crib

Layout

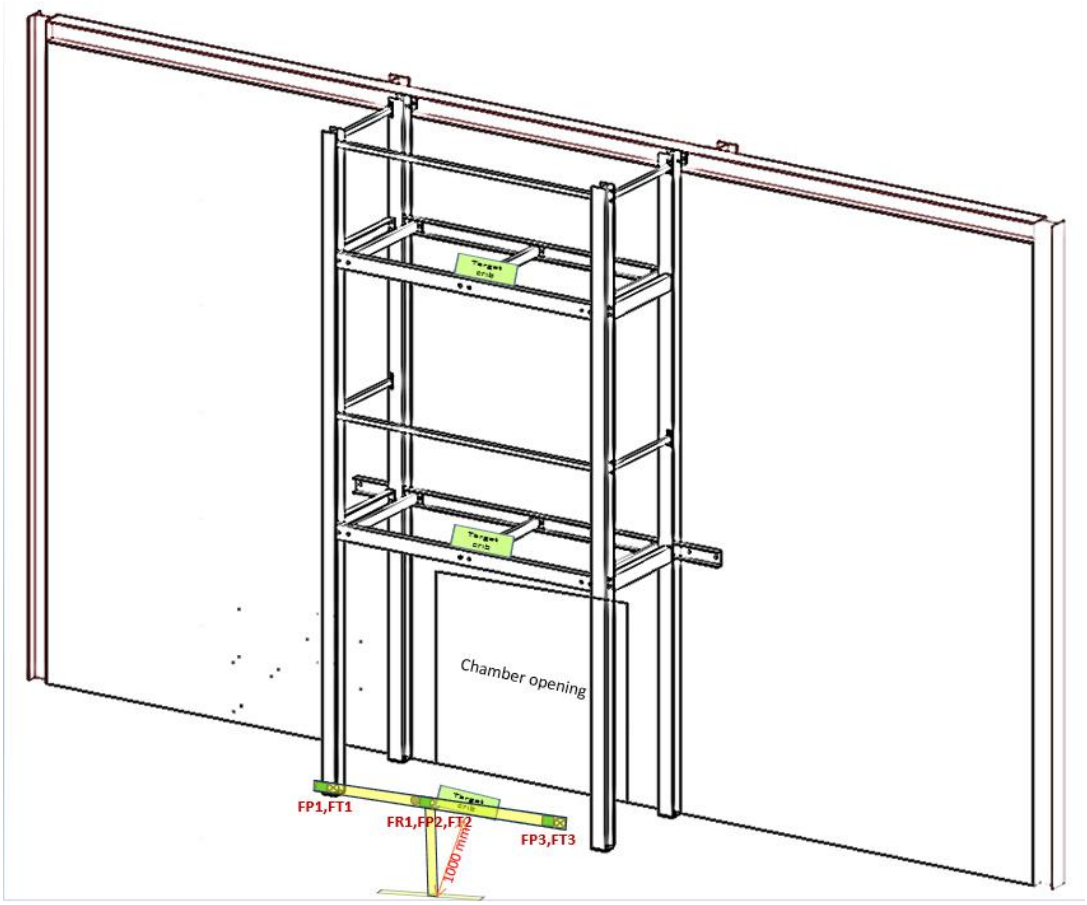

Radiant heat at 1m from target crib

The radiant heat was measured using a water cooled Gardon Guage sensor of range 100 kW/m²:

The heat flux meter was located at 1000 mm from the target crib at mid-height of the wood crib.

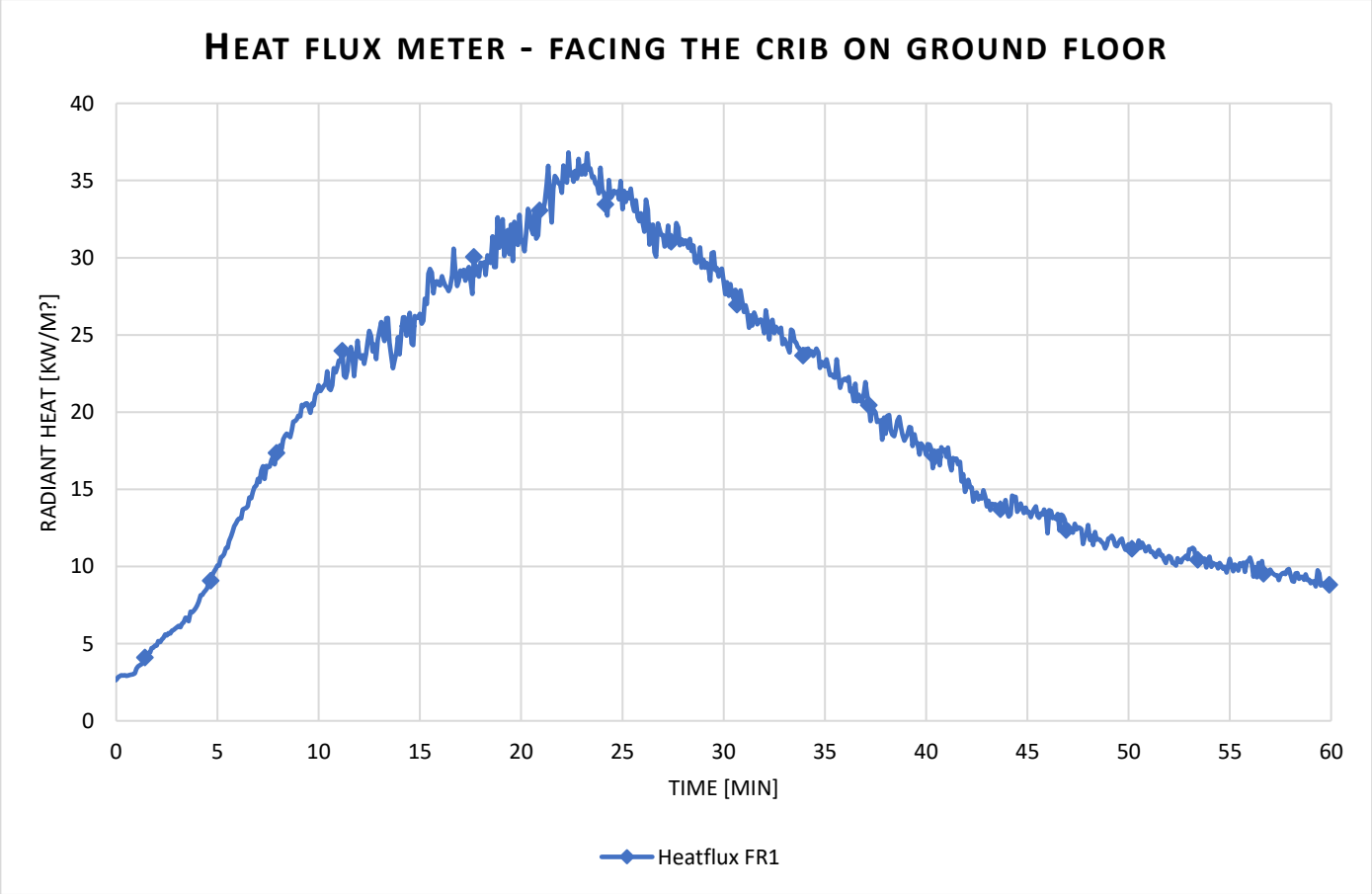

Temperature measured by plate TC's at 1m away from target crib

Ø 1.5 mm mineral insulated thermocouples were placed 1m from the target crib at mid height of wood crib spaced by 500 mm from the centre point ofthe crib. The installation included 3x Inconel thermocouple and 3x plate thermocouples.

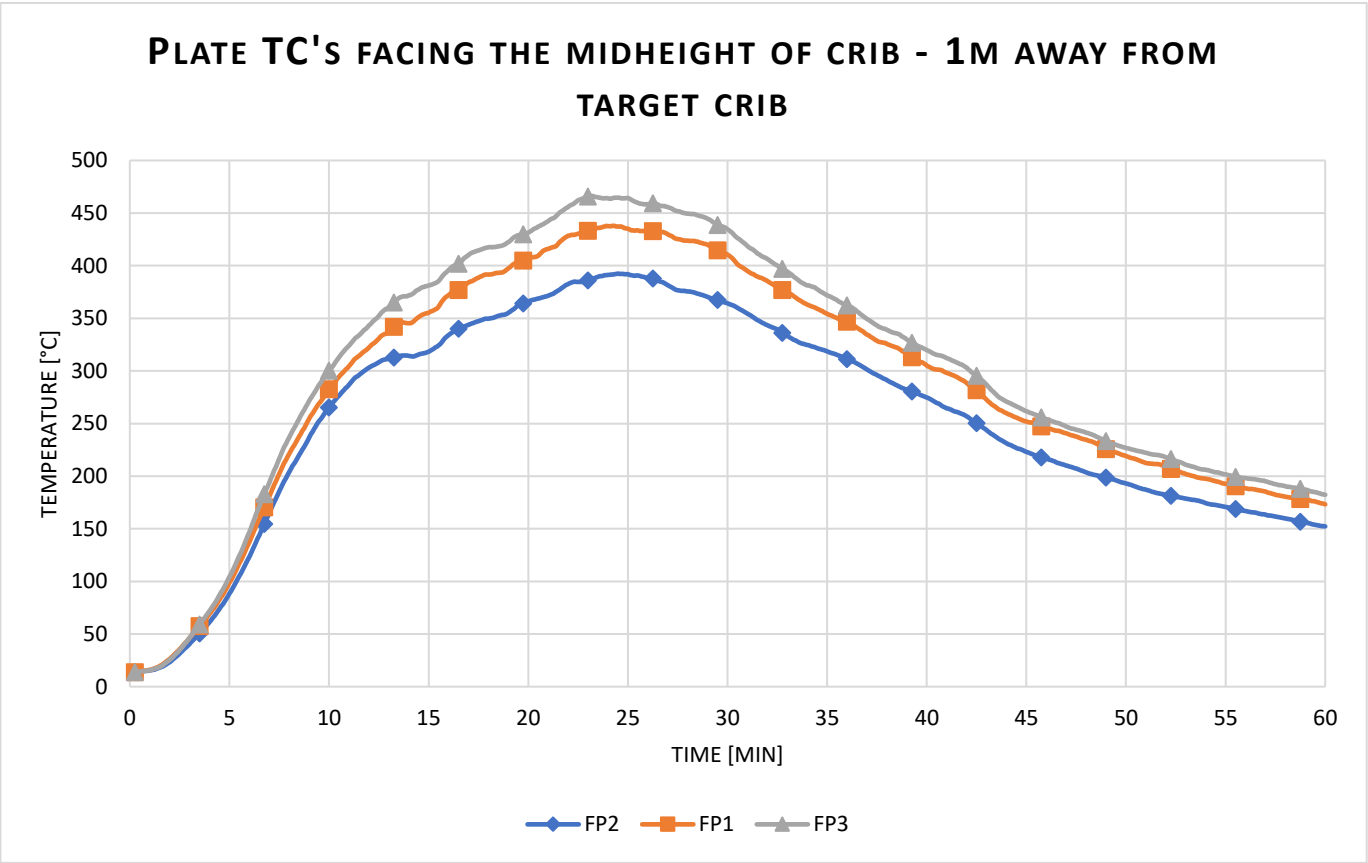

Temperature measured by Inconels at 1m away from crib

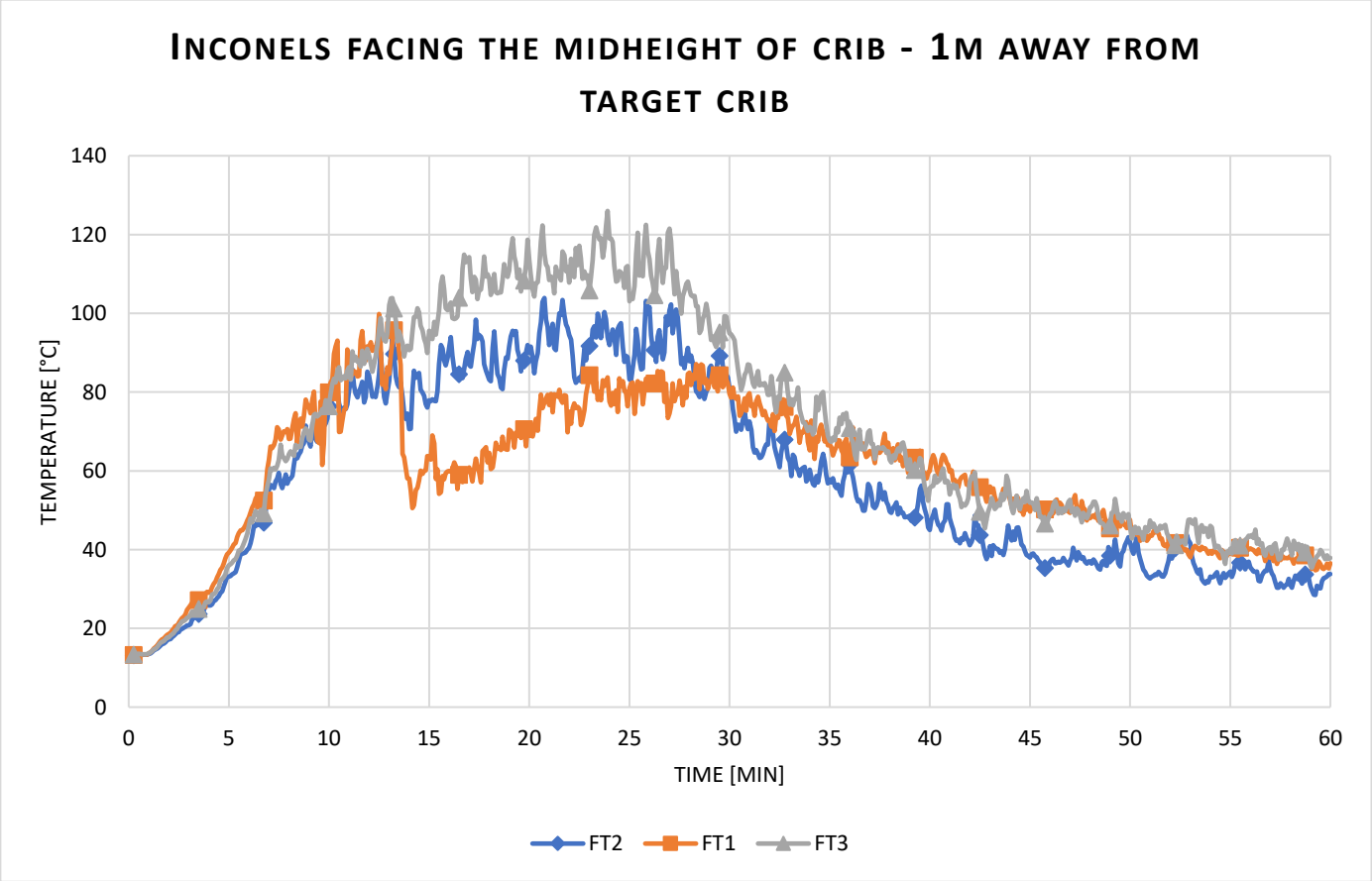

Radiant heat calculated from Plate TC

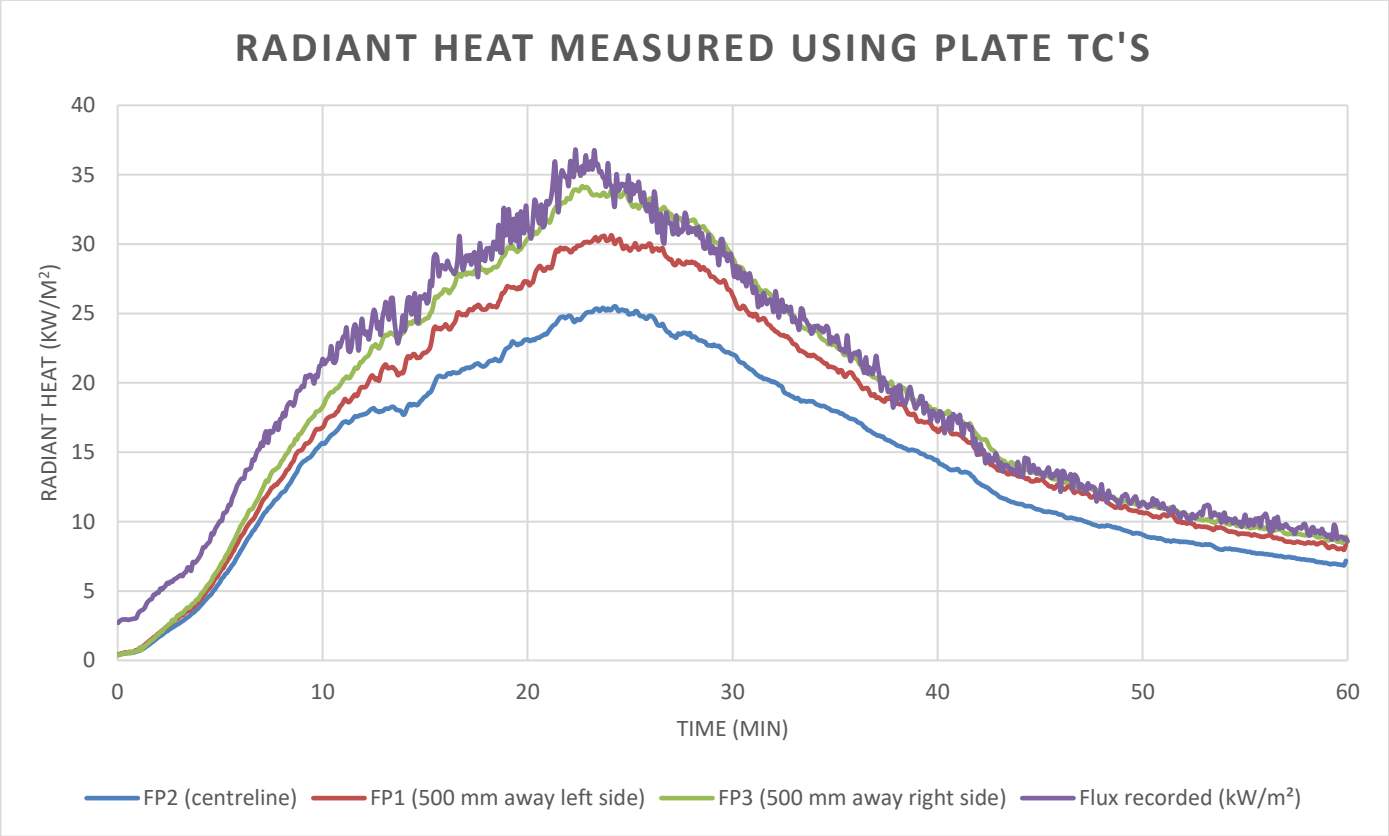

Data measurement from side edges on Ground Floor (660 mm from wall).

Layout

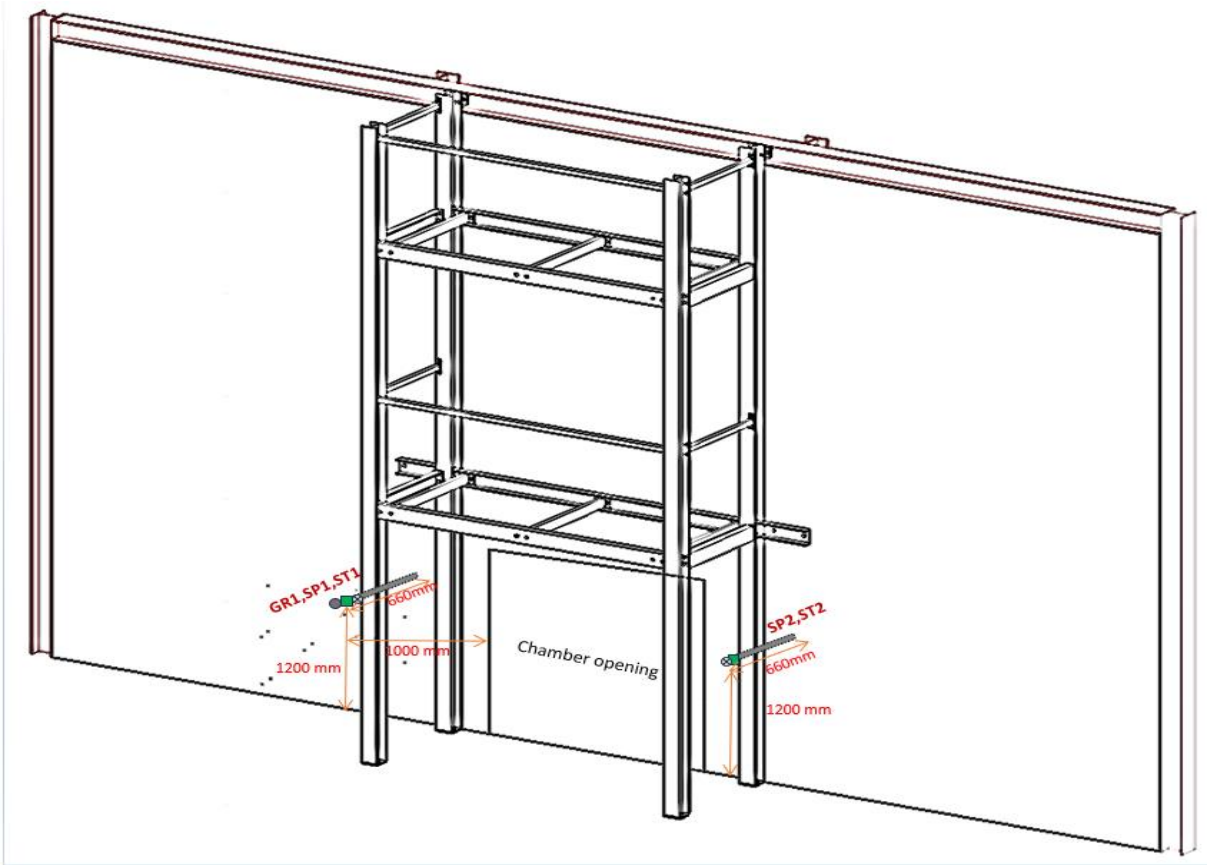

Radiant heat from the flux meter on side edge (660 mm from wall)

The radiant heat was measured using a water cooled Gardon Guage sensor of range 100 kW/m²:

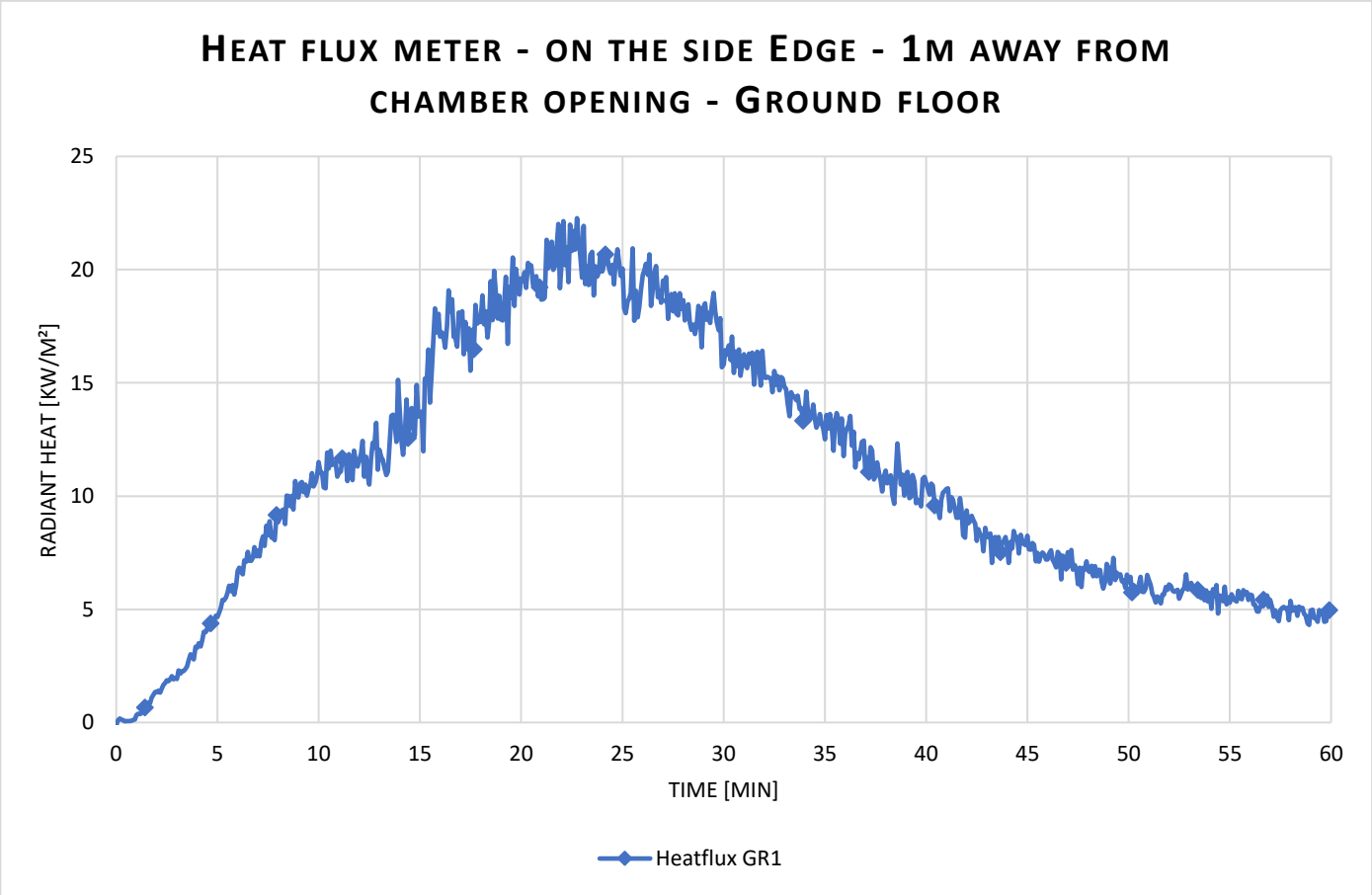

Temperature measured using plate TC's on the side edge

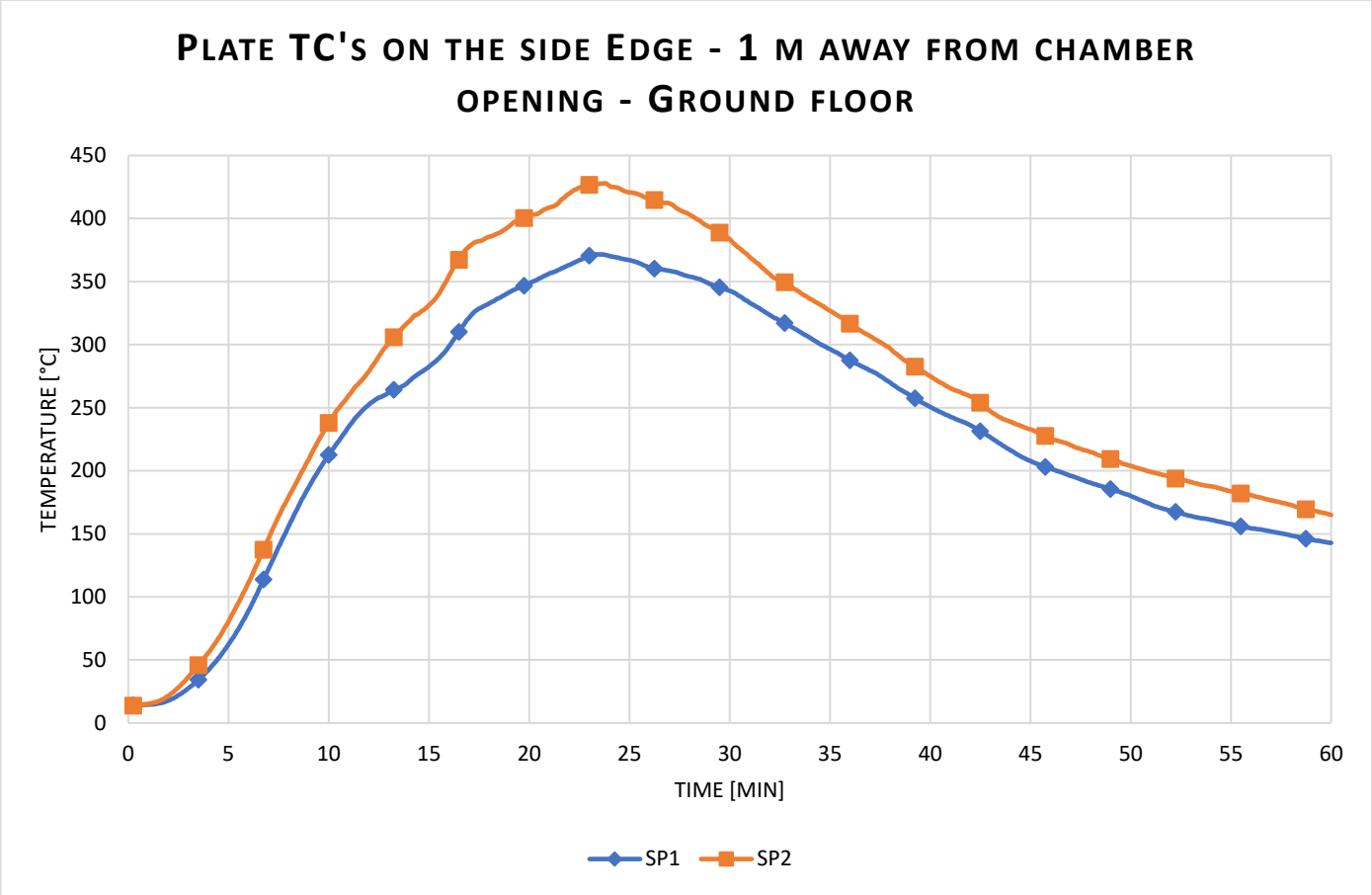

Temperature measured using Inconels on the side edge

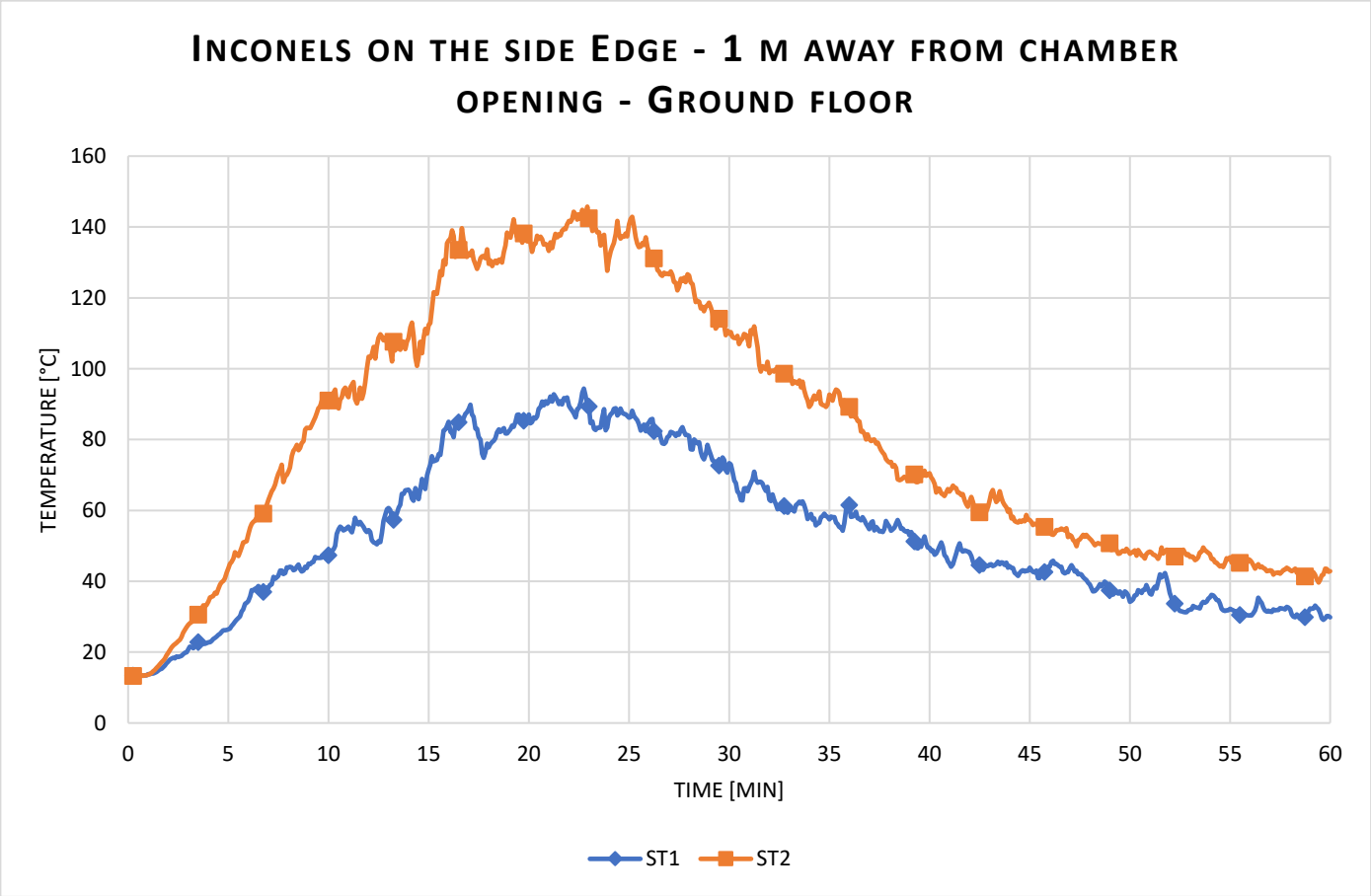

Radiant heat calculated from Plate TC

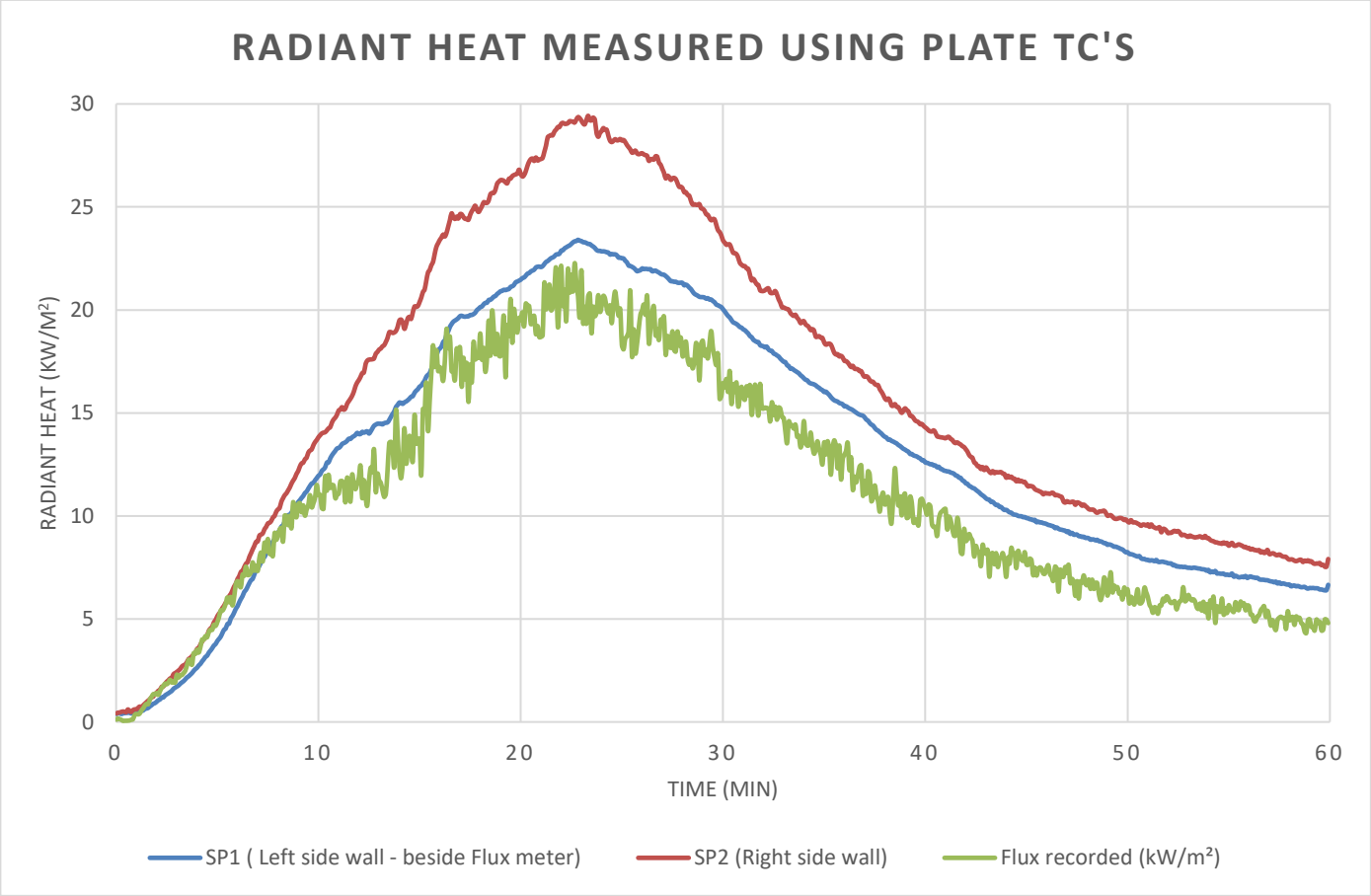

Data measurement from side edges on 1st Floor (660 mm from wall).

Layout

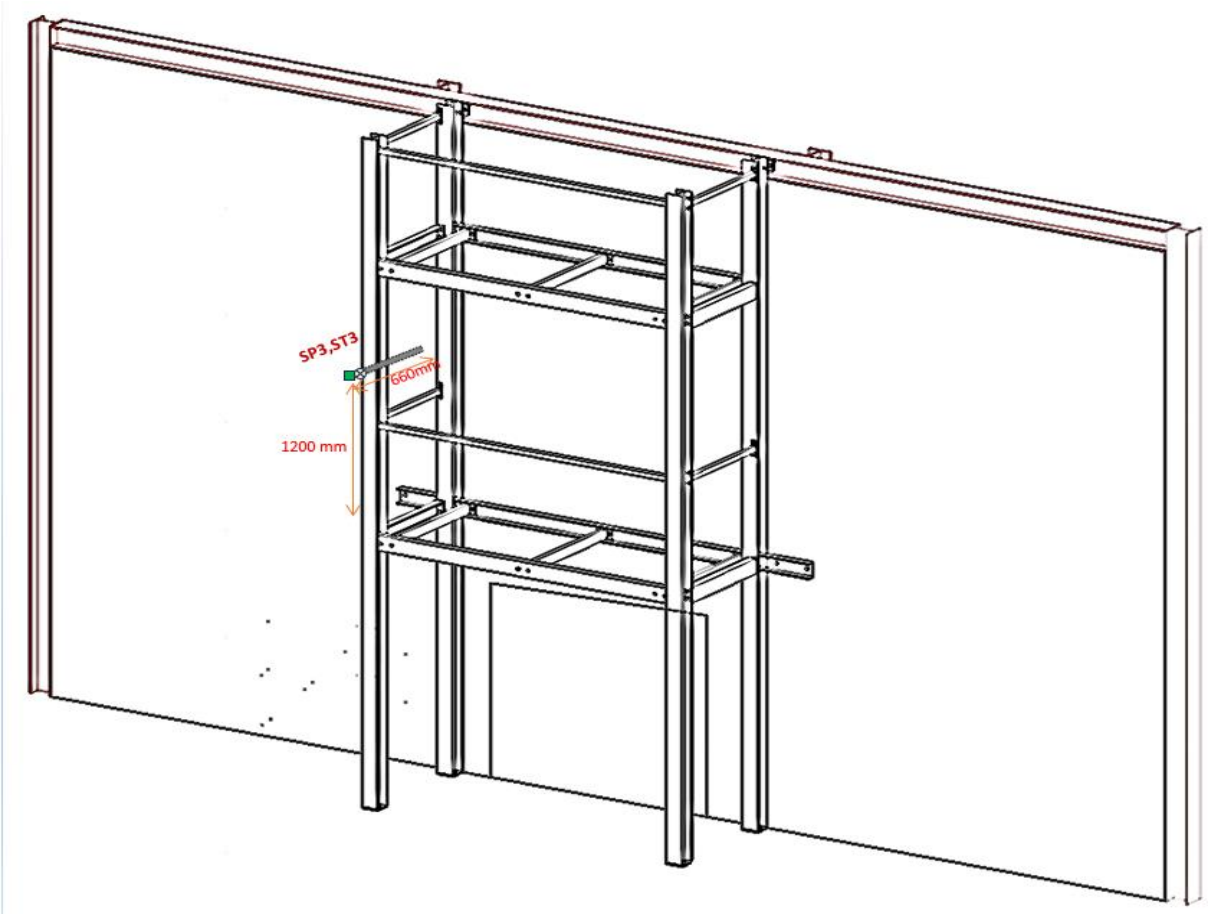

Temperature measured using plate TC on the side edge – 1st floor

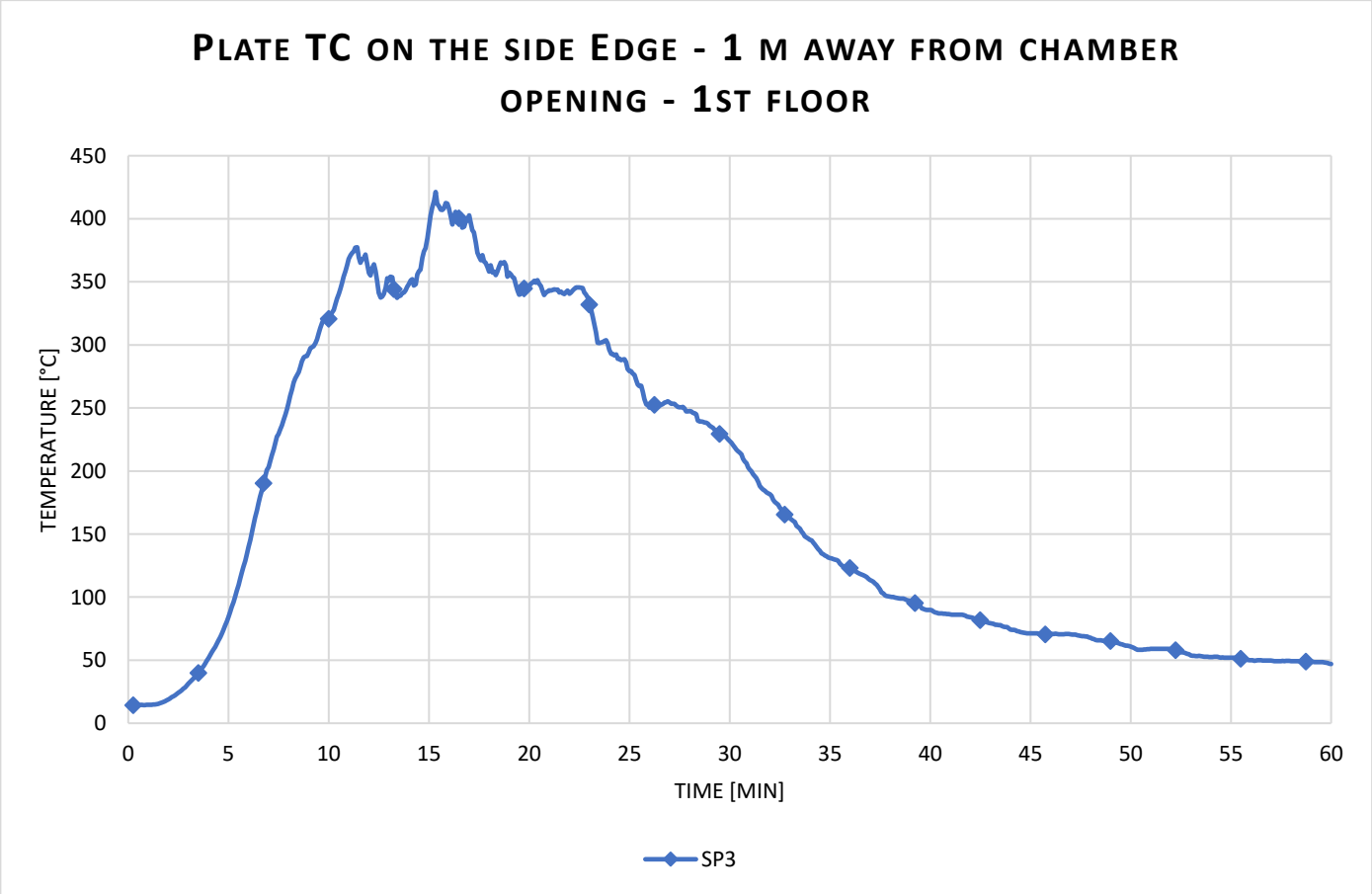

Temperature measured using Inconel on the side edge – 1st floor

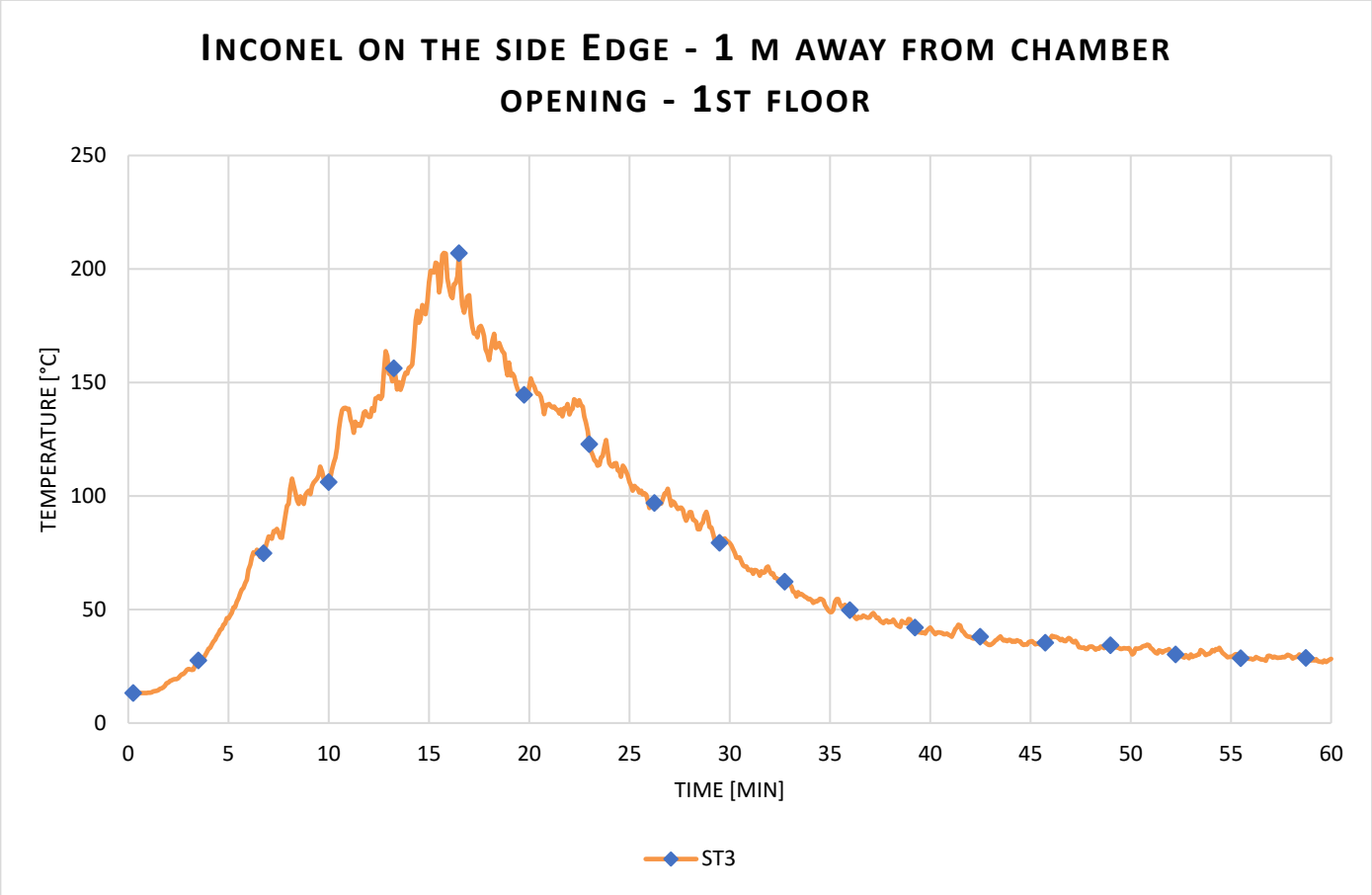

Radiant heat calculated from Plate TC

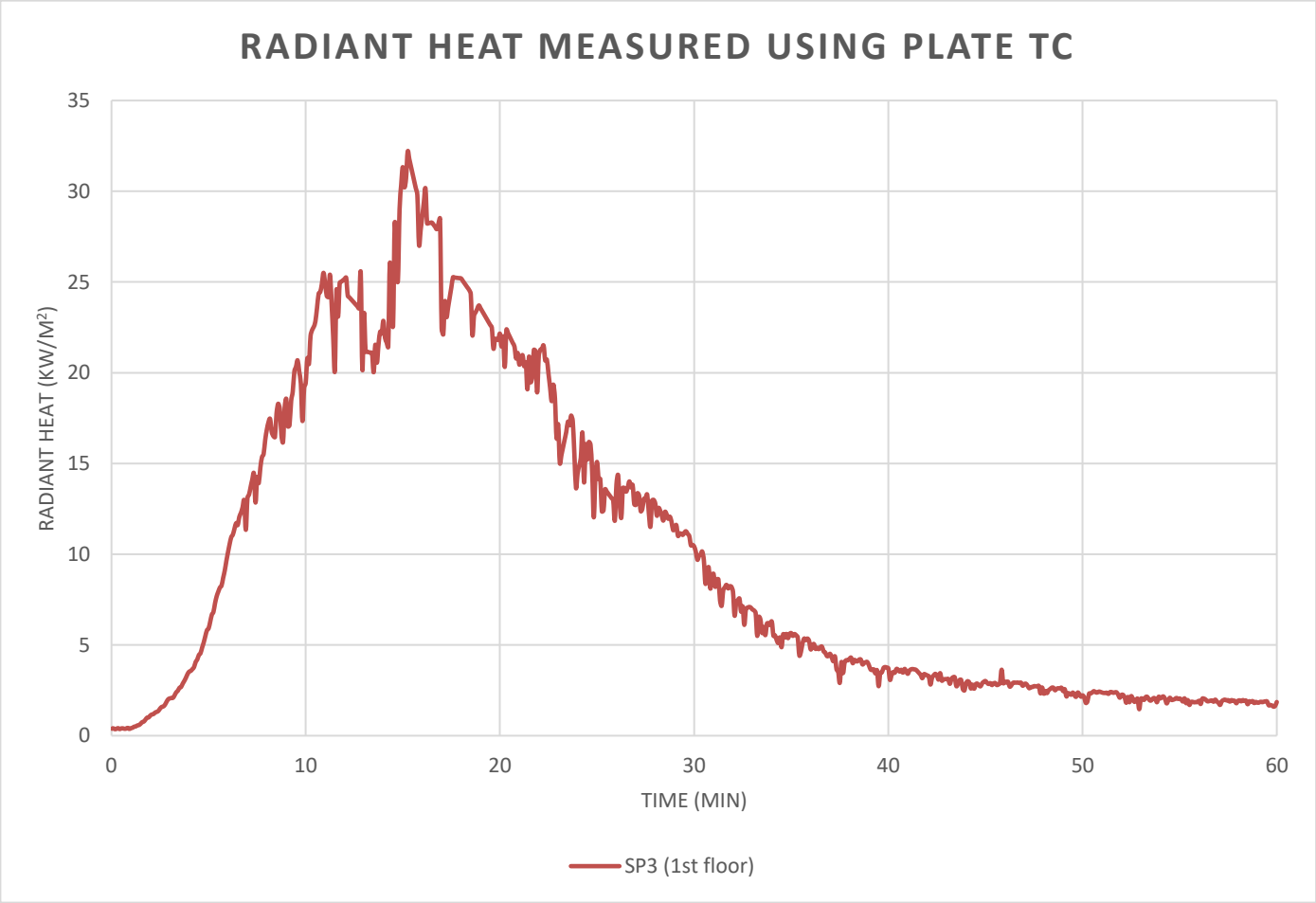

Data measurement from side edges on 2nd Floor (660 mm from wall).

Layout

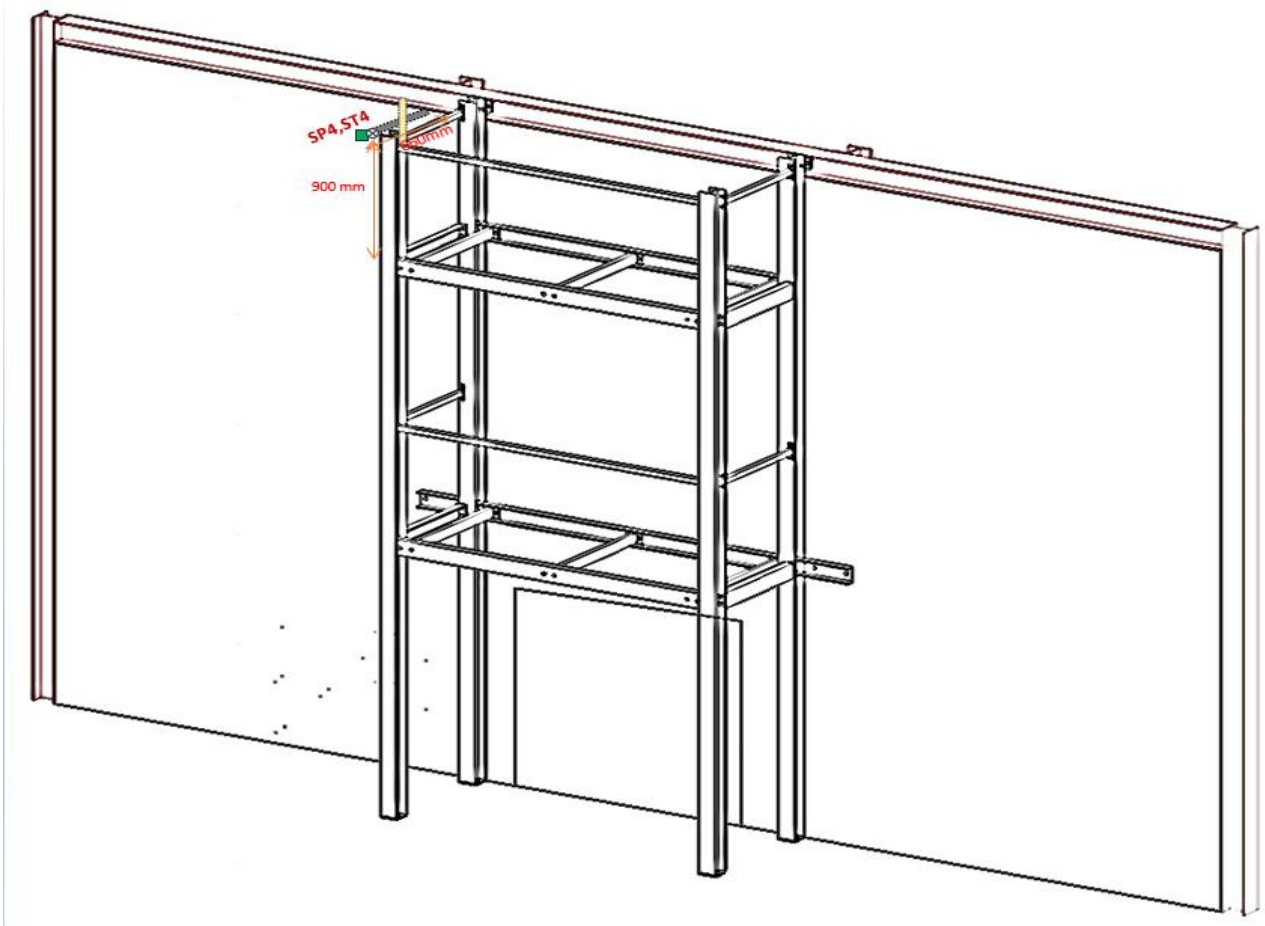

Temperature measured using plate TC's on the side edge – 2nd floor

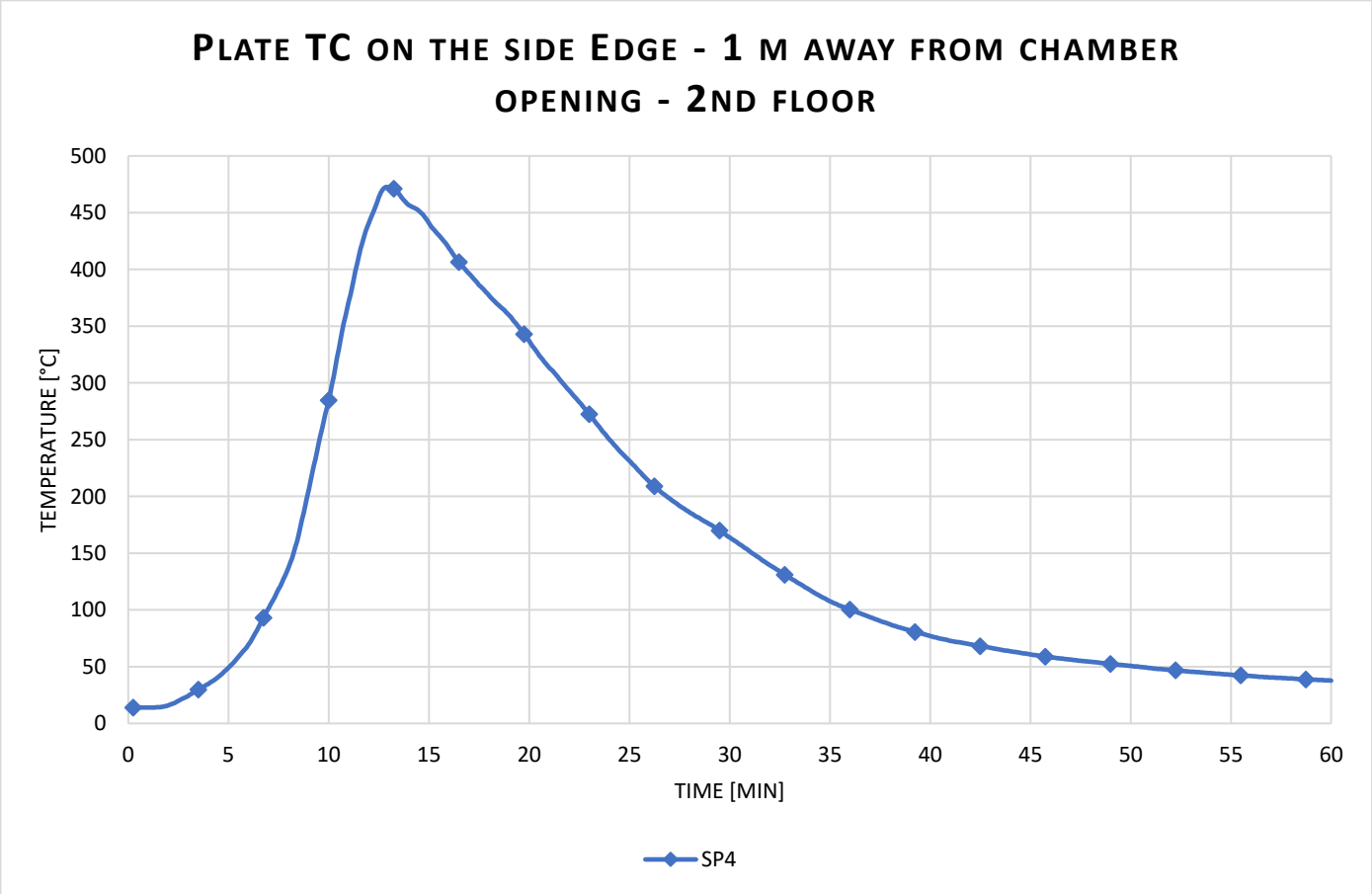

Temperature measured using Inconels on the side edge – 2nd floor

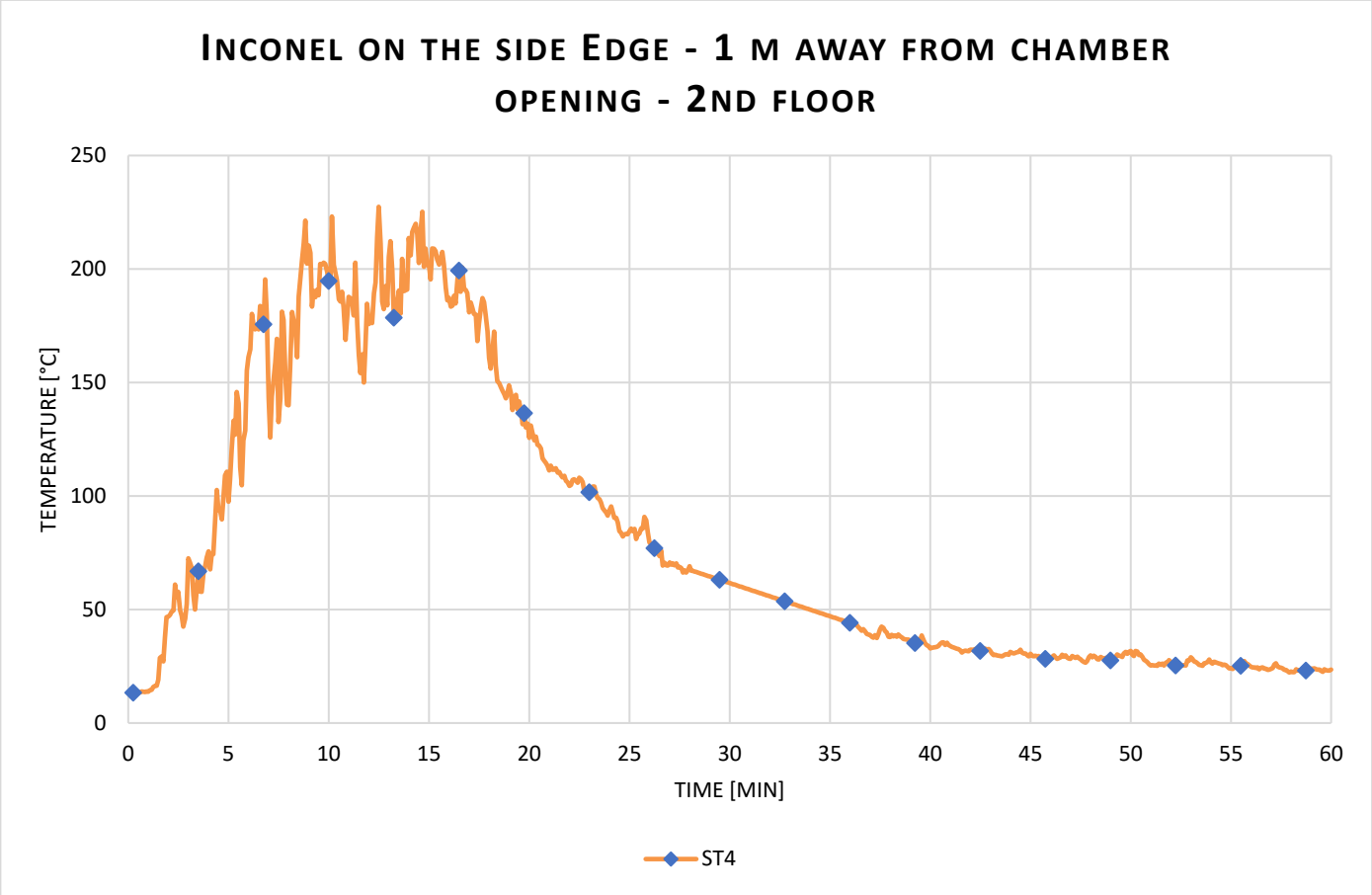

Radiant heat calculated from Plate TC

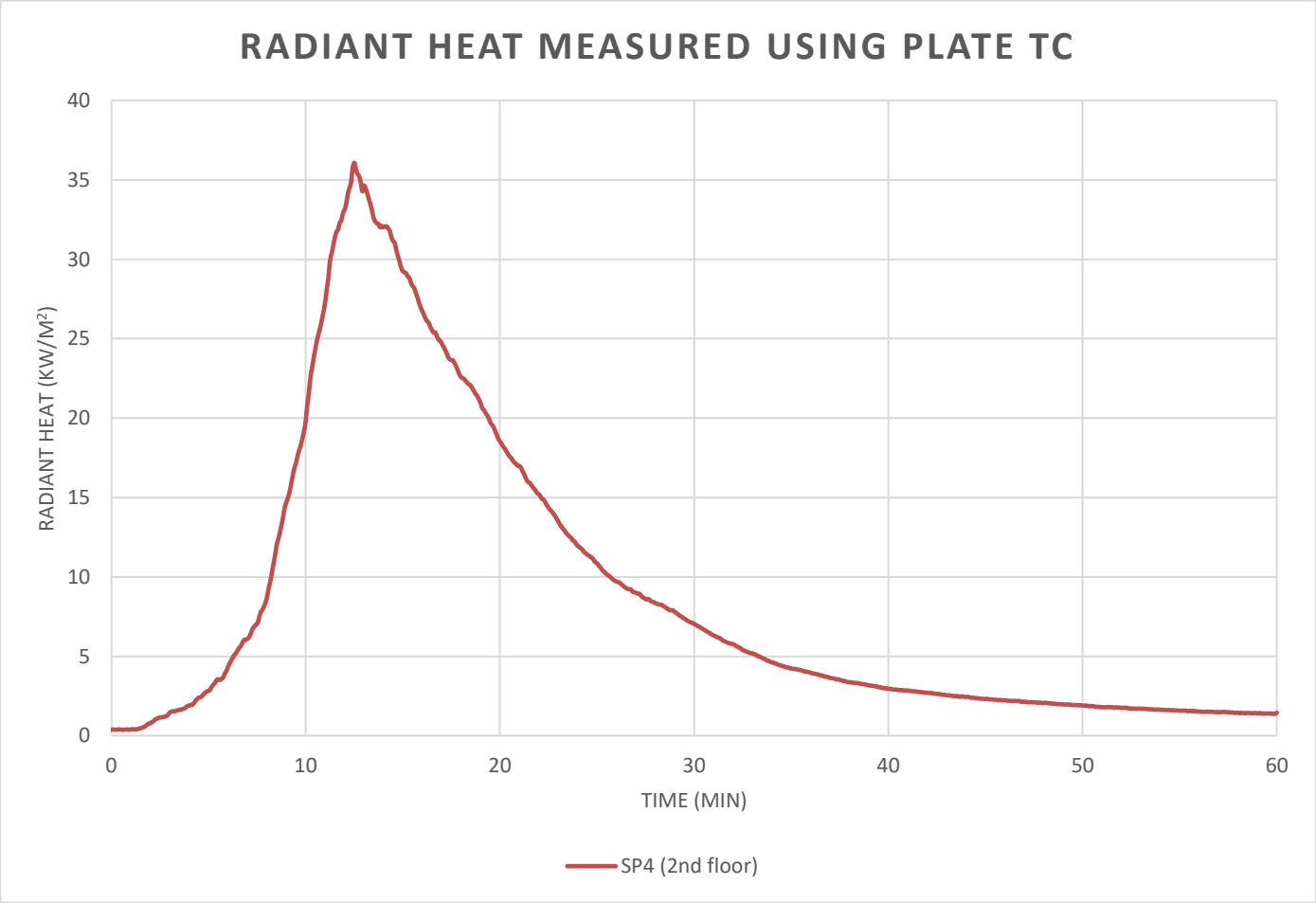

Data measurement from 1st floor wall.

Layout

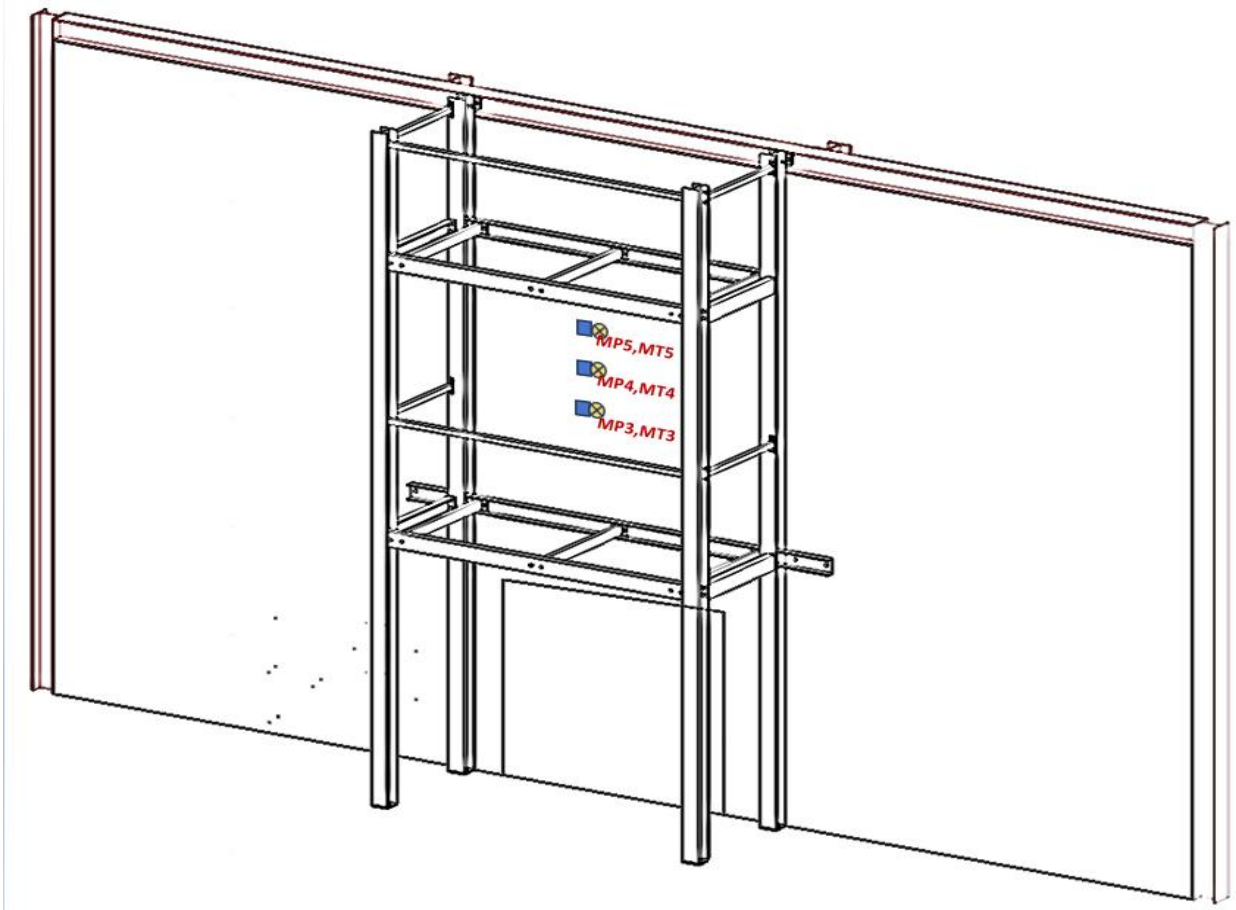

Temperature measured from the Plate TC's on wall at 1st floor

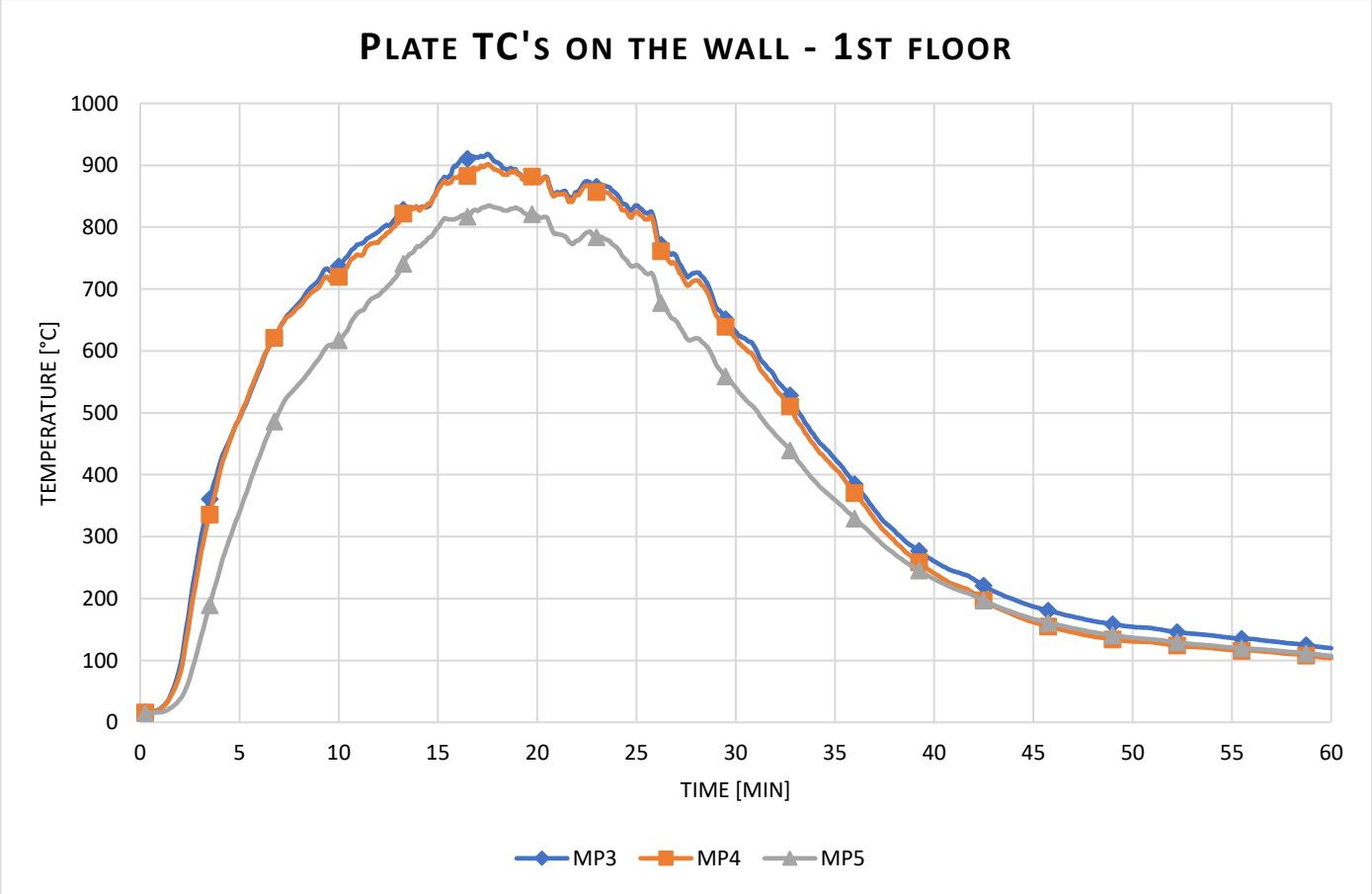

Temperature measured from the Inconels on wall at 1st floor

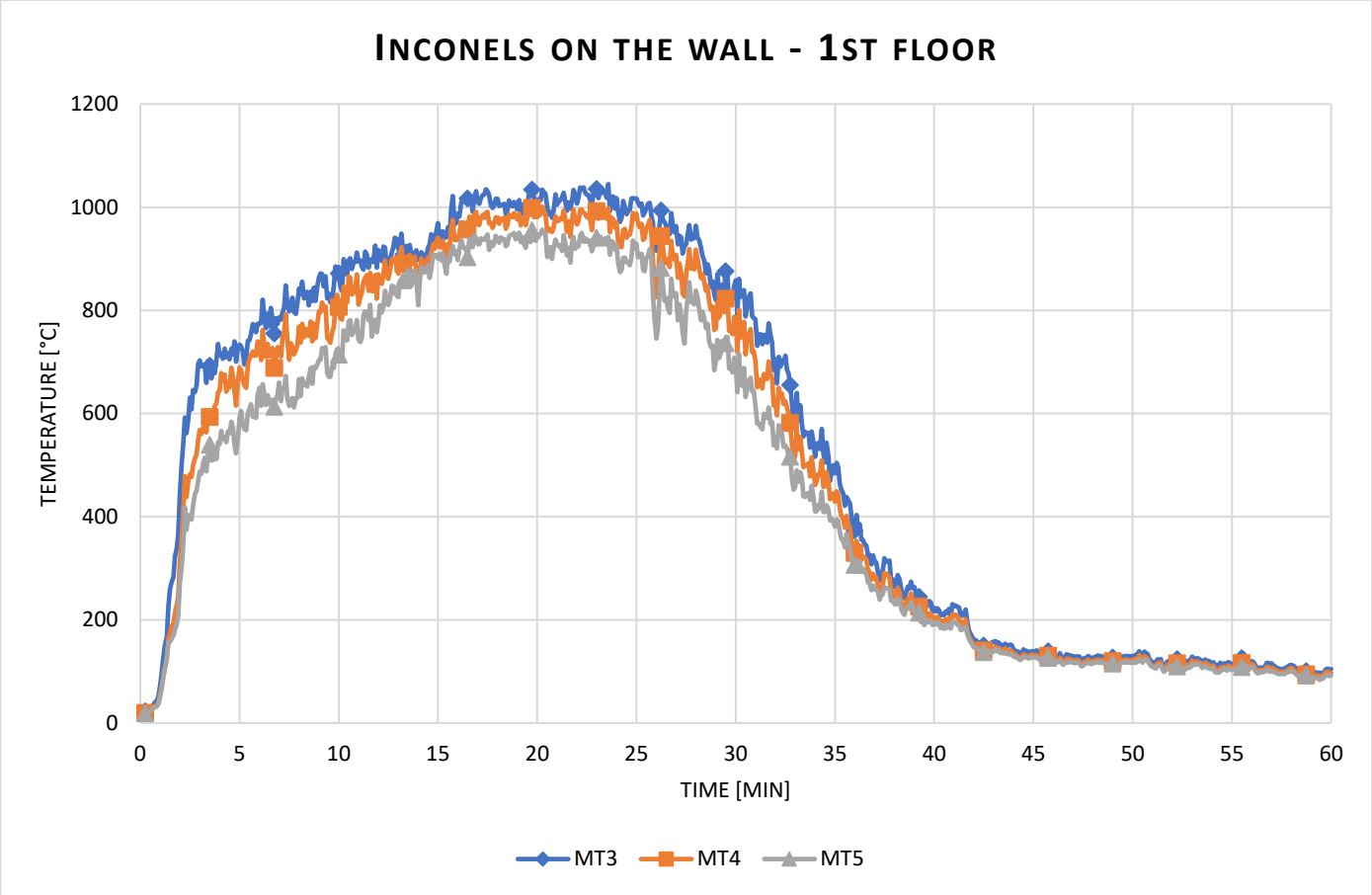

Radiant heat calculated from Plate TC

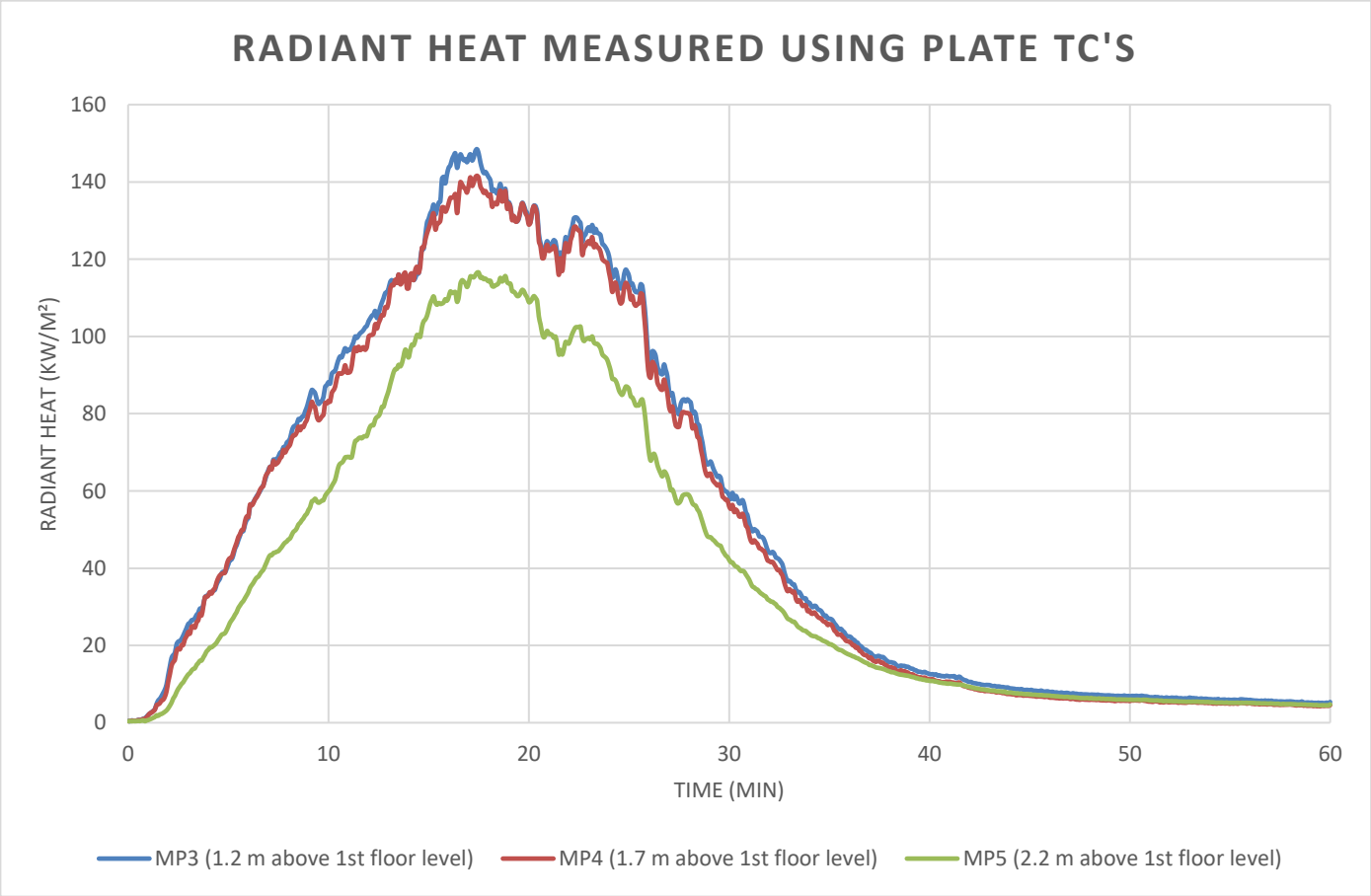

Data measurement from 2nd floor wall.

Layout

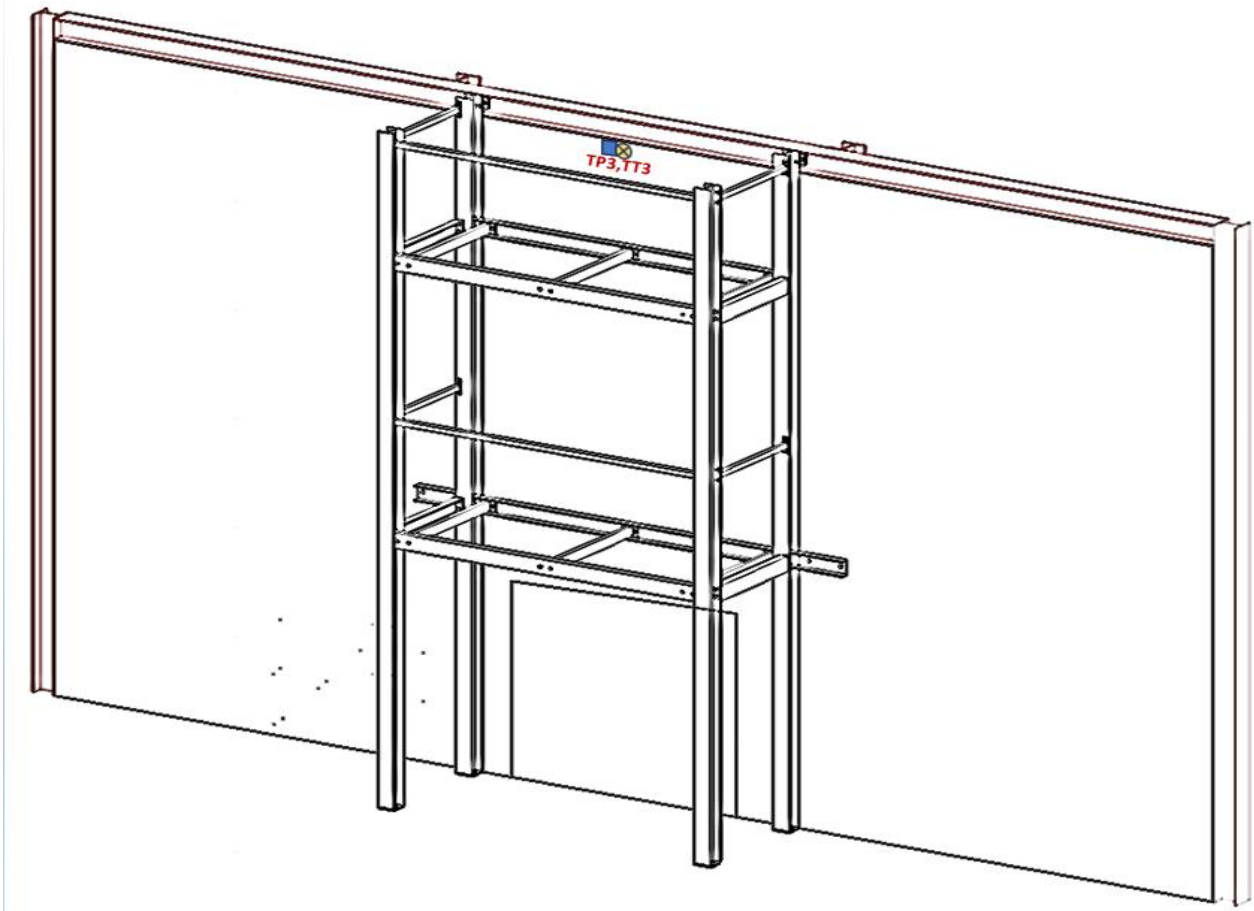

Temperature measured from Plate TC on the wall at 2nd floor

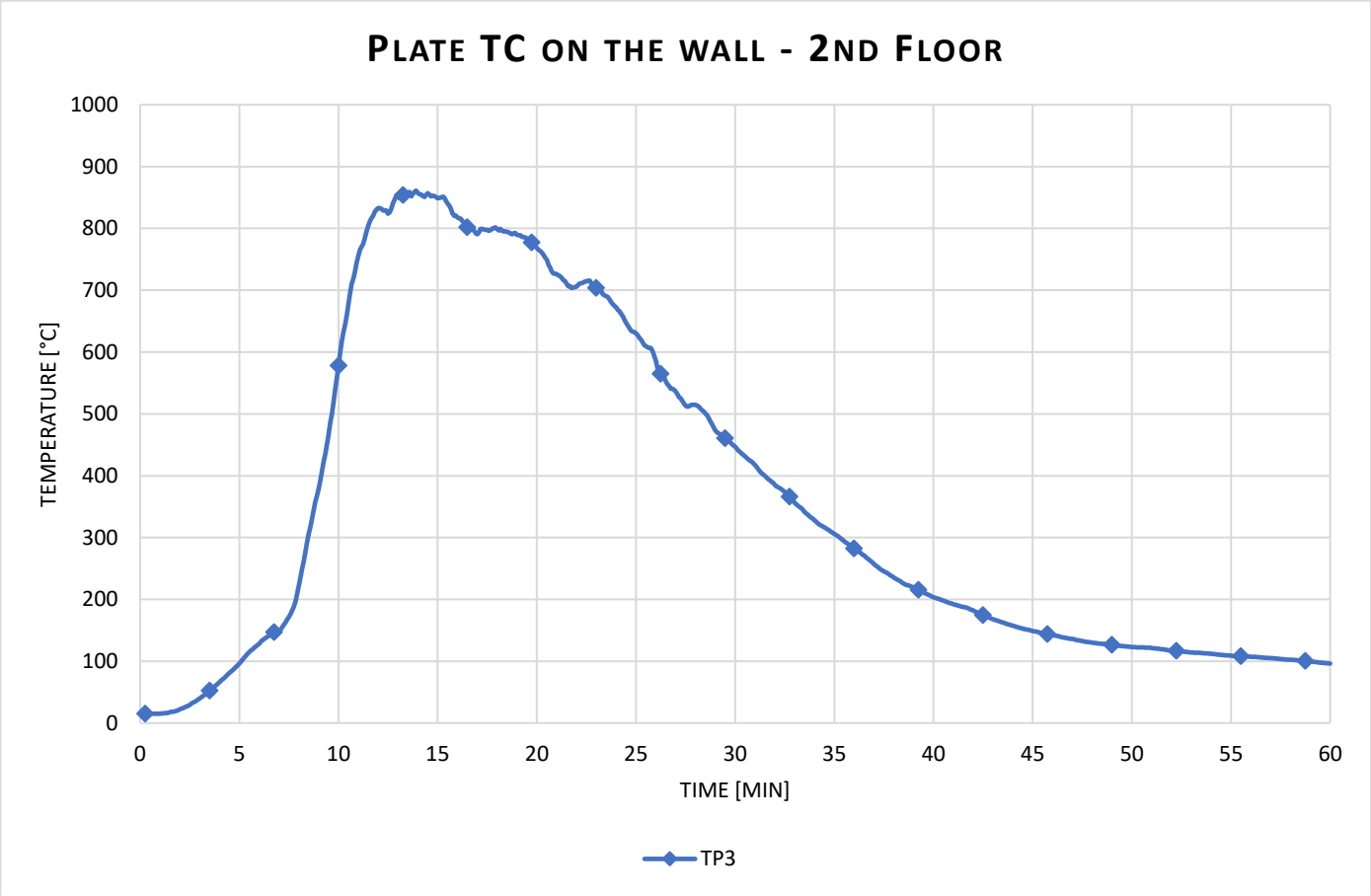

Temperature measured from Inconel on the wall at 2nd floor

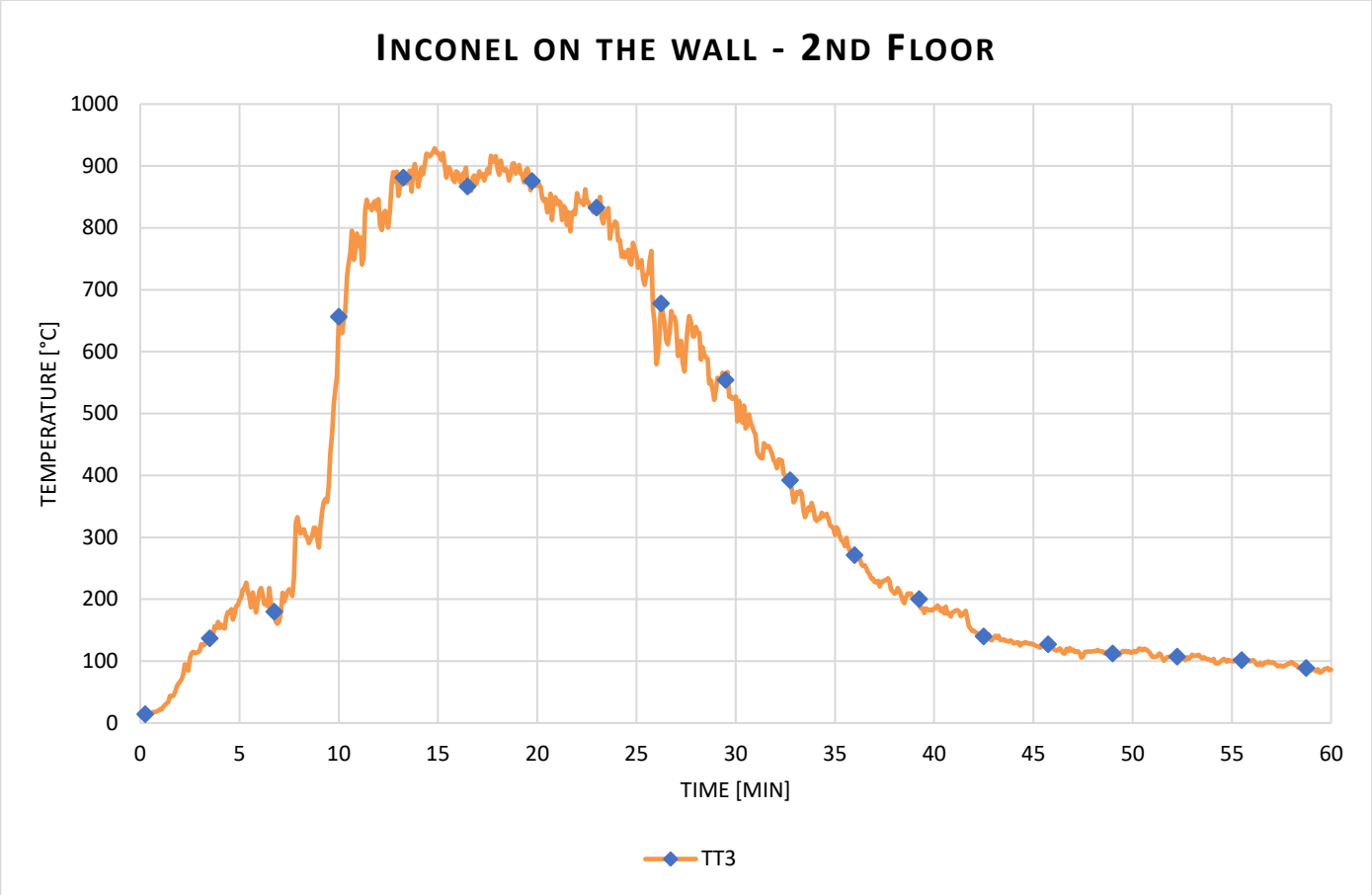

Radiant heat calculated from Plate TC

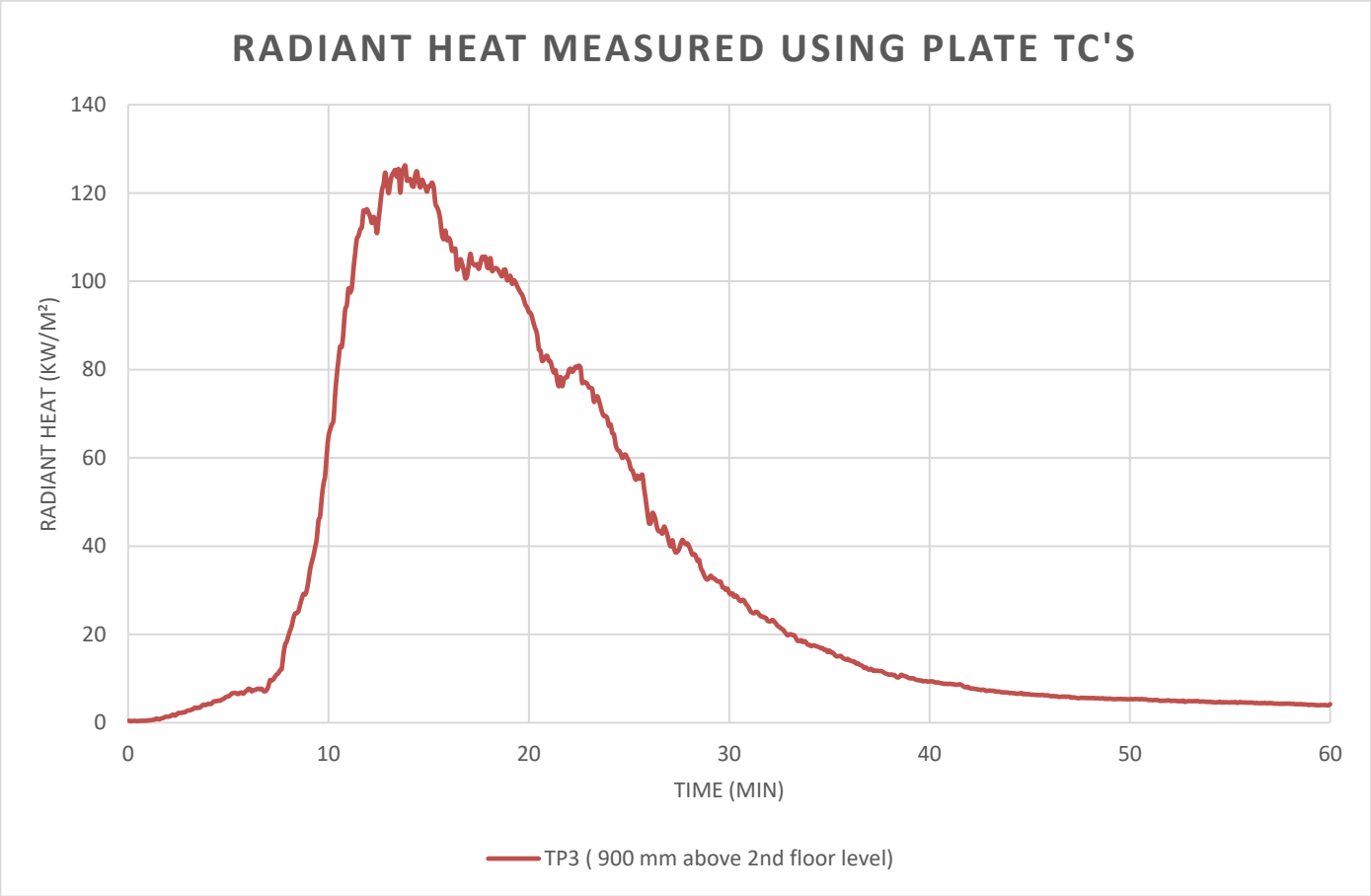

Data measurement from 1st floor exposed edge.

Layout

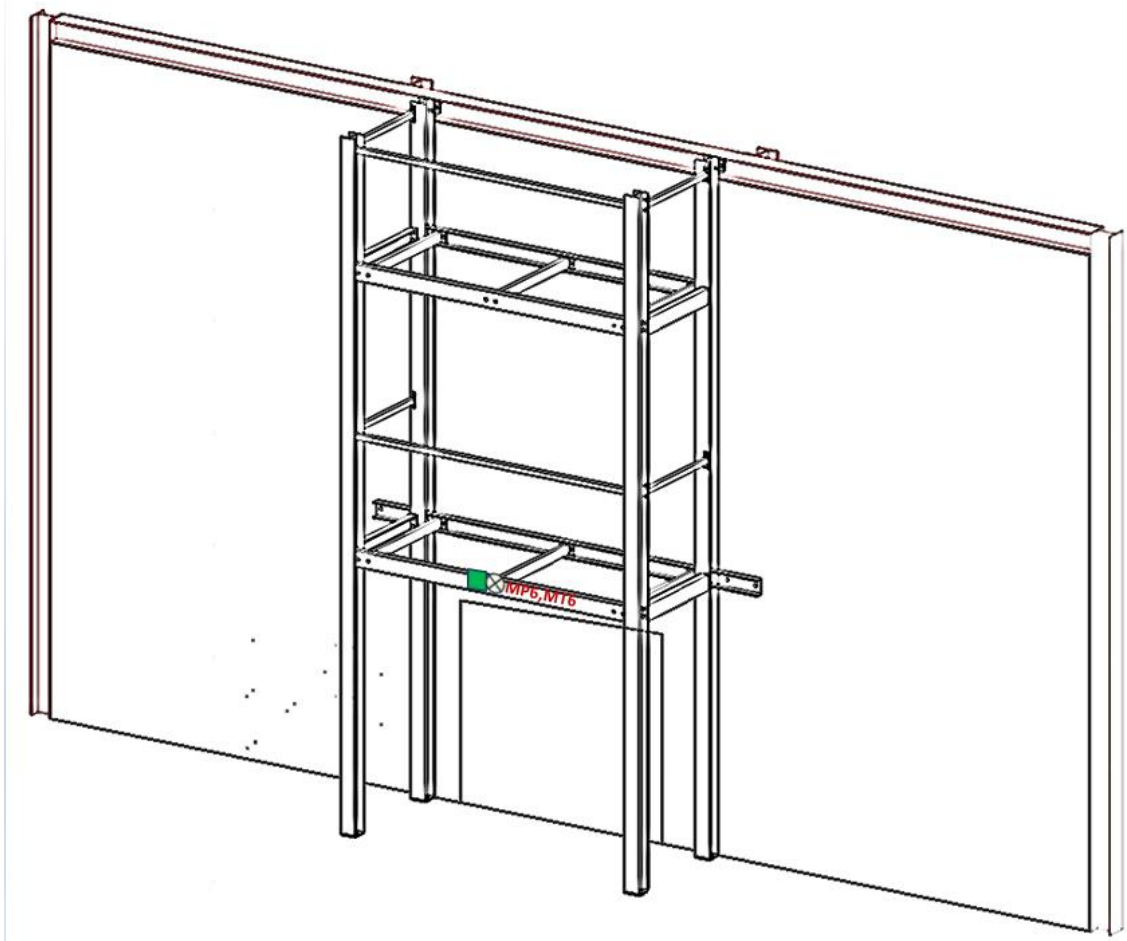

Temperature measured using plate TC 1st floor exposed edge

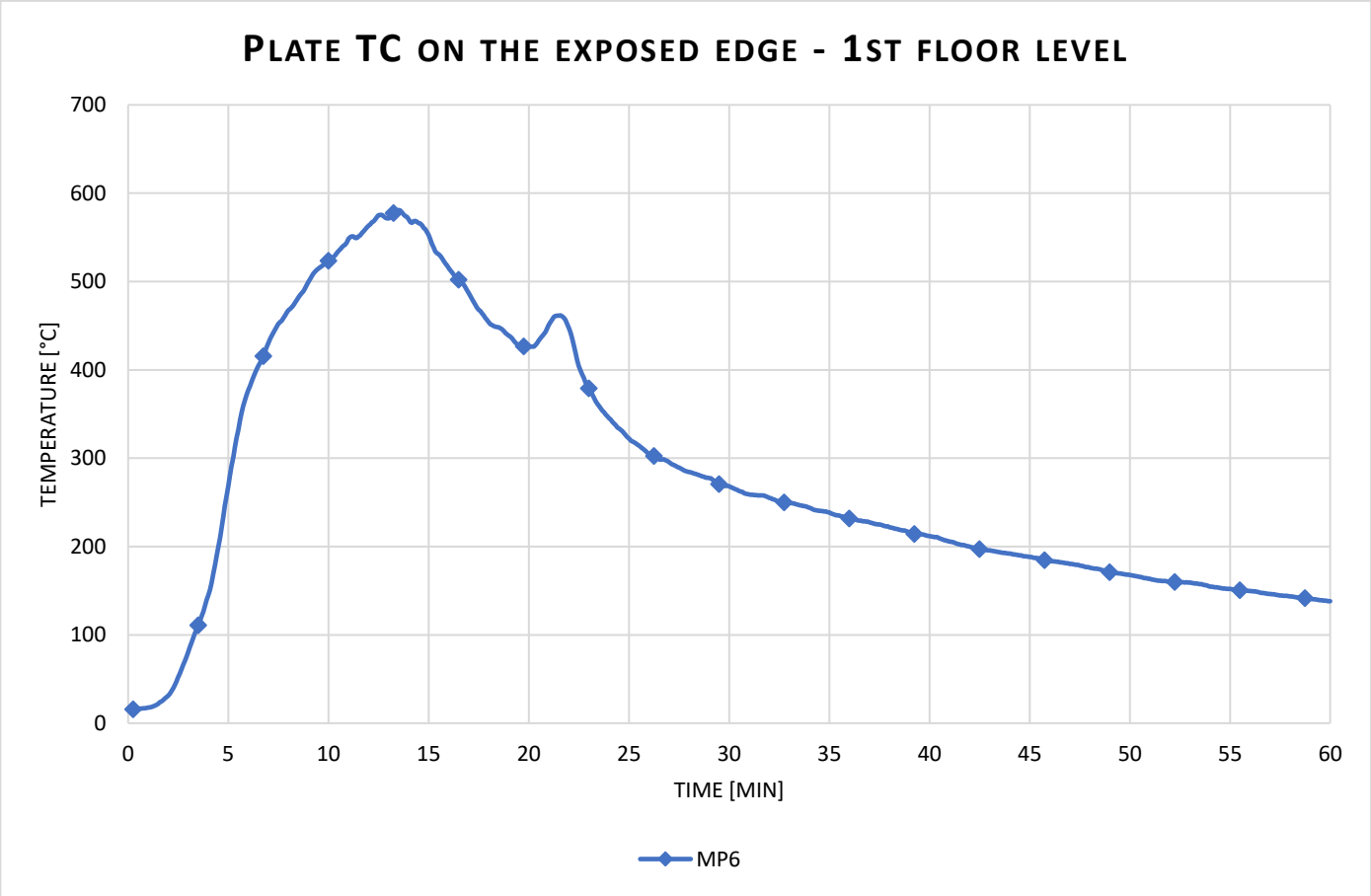

Temperature measured using plate Inconel 1st floor exposed edge

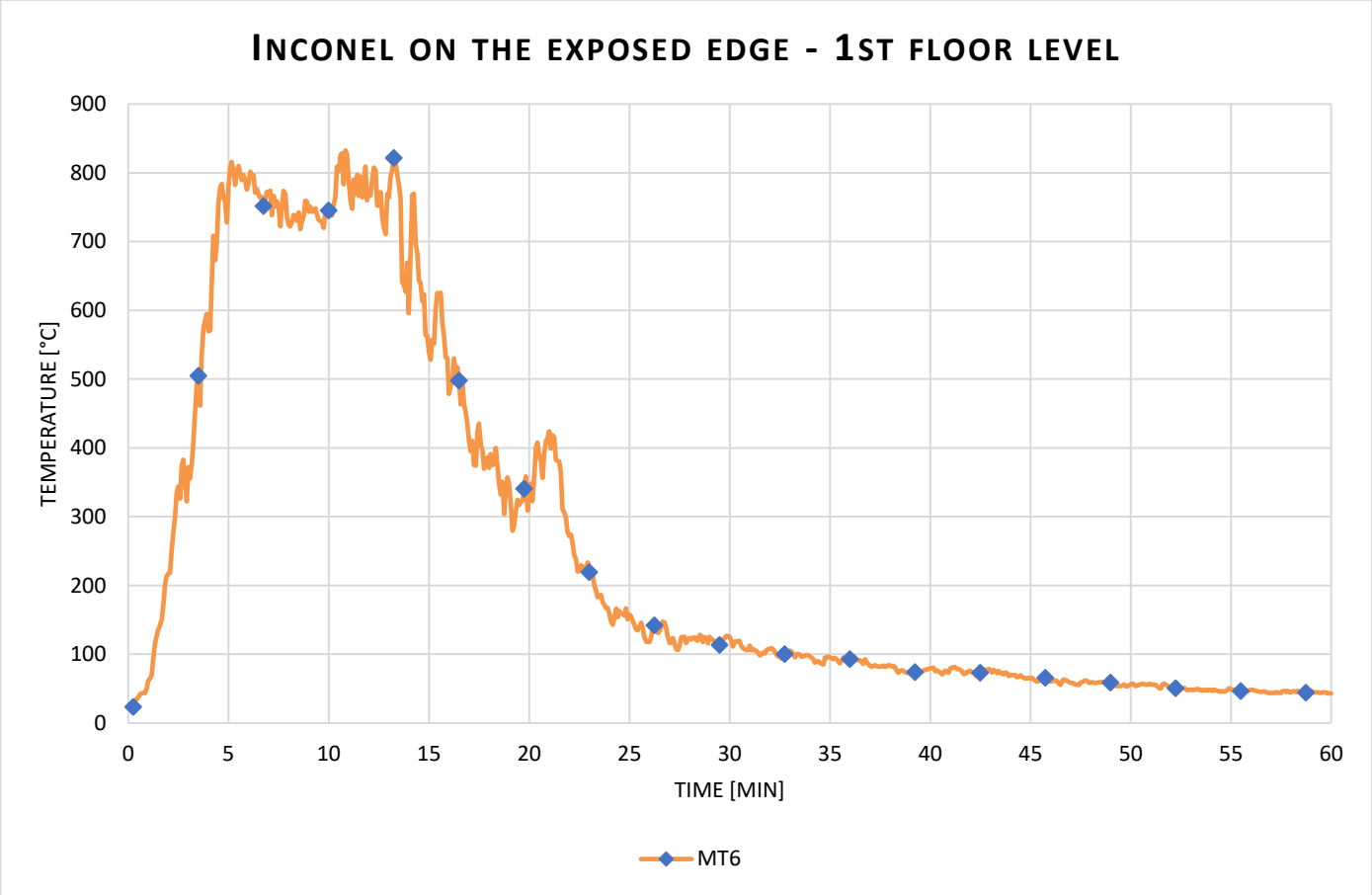

Radiant heat calculated from Plate TC

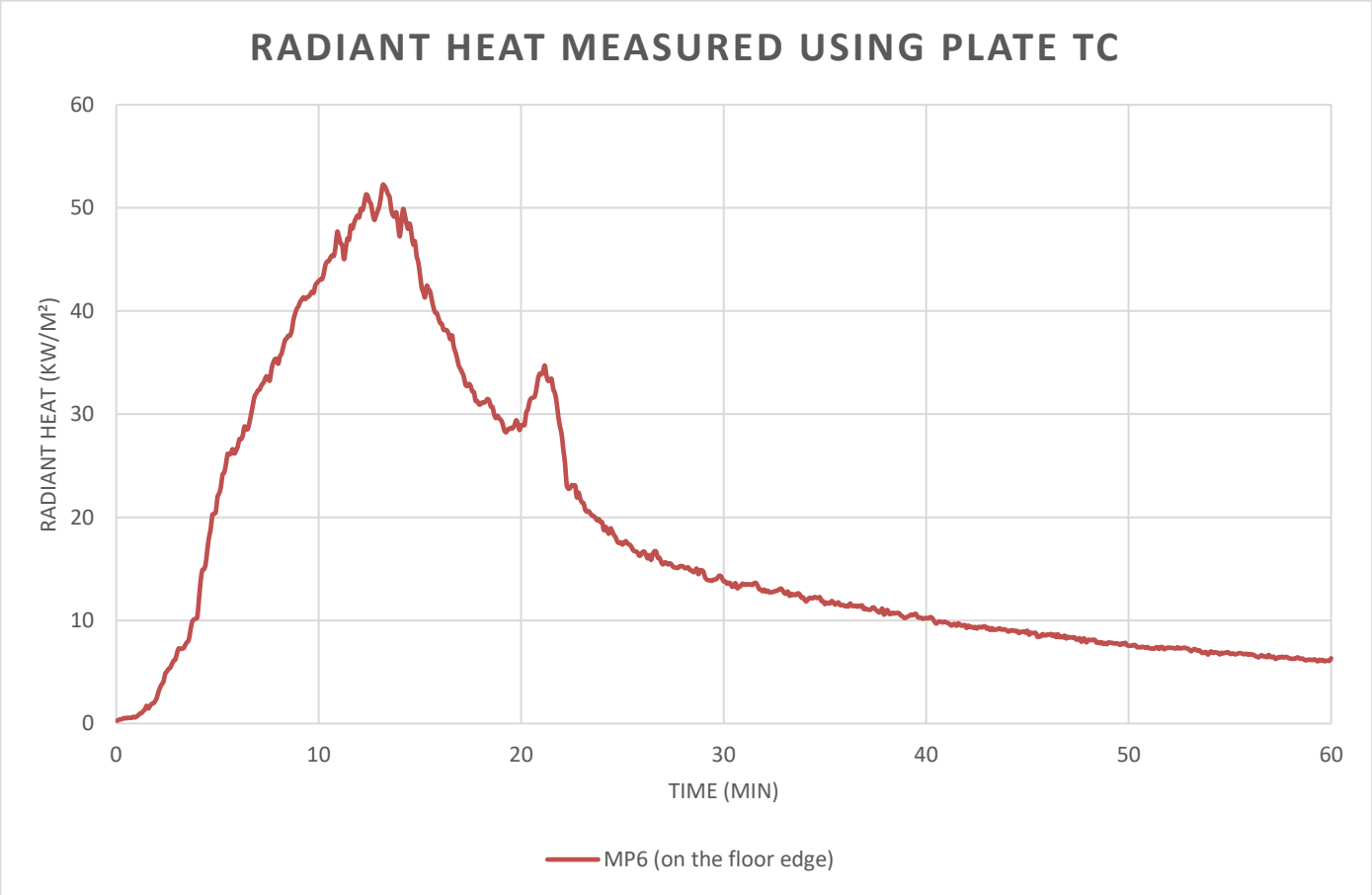

Data measurement from 1st floor exposed edge.

Layout

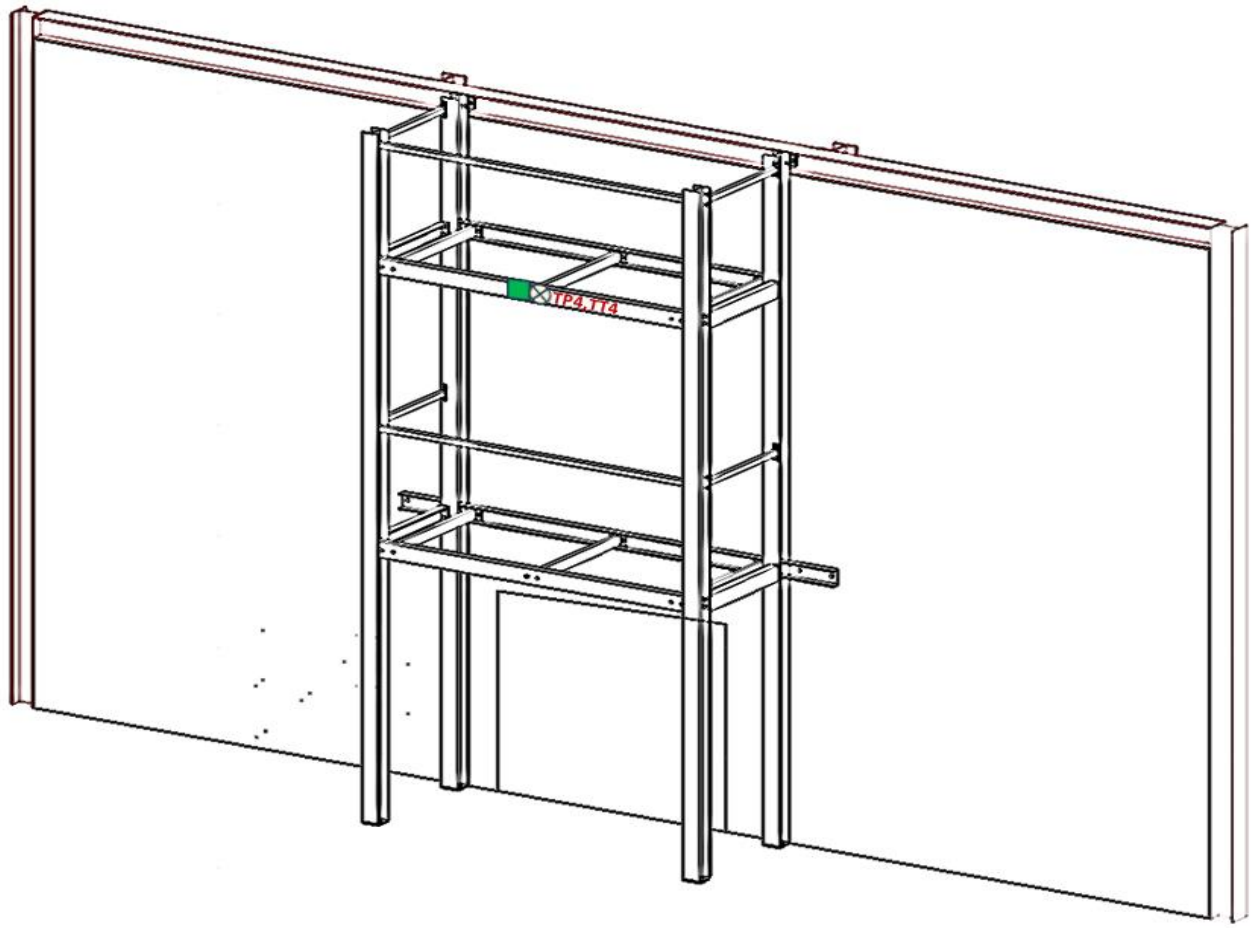

Temperature measured from the Plate TC on exposed edge at 2nd floor

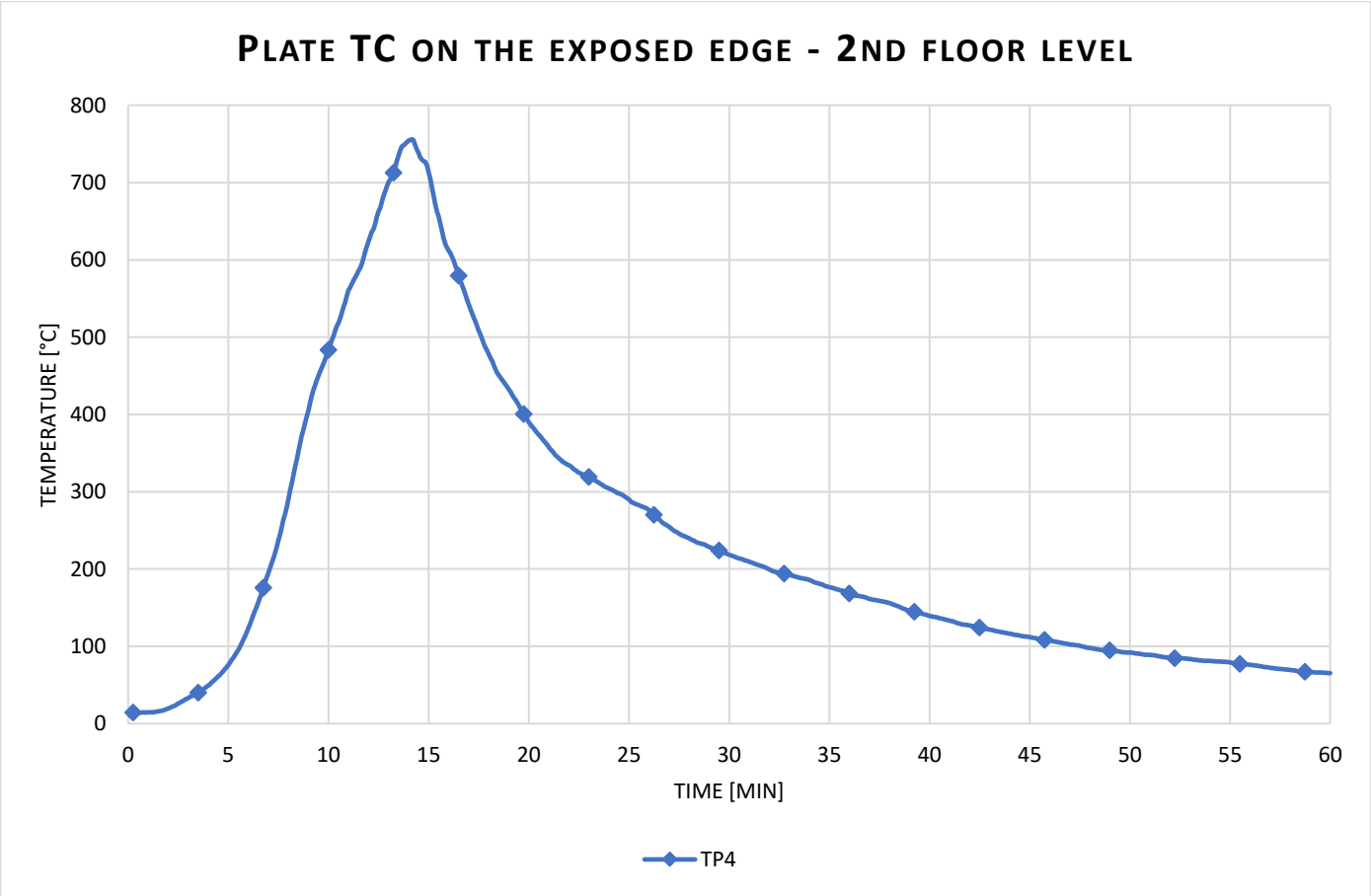

Temperature measured from the Inconel on exposed edge at 2nd floor

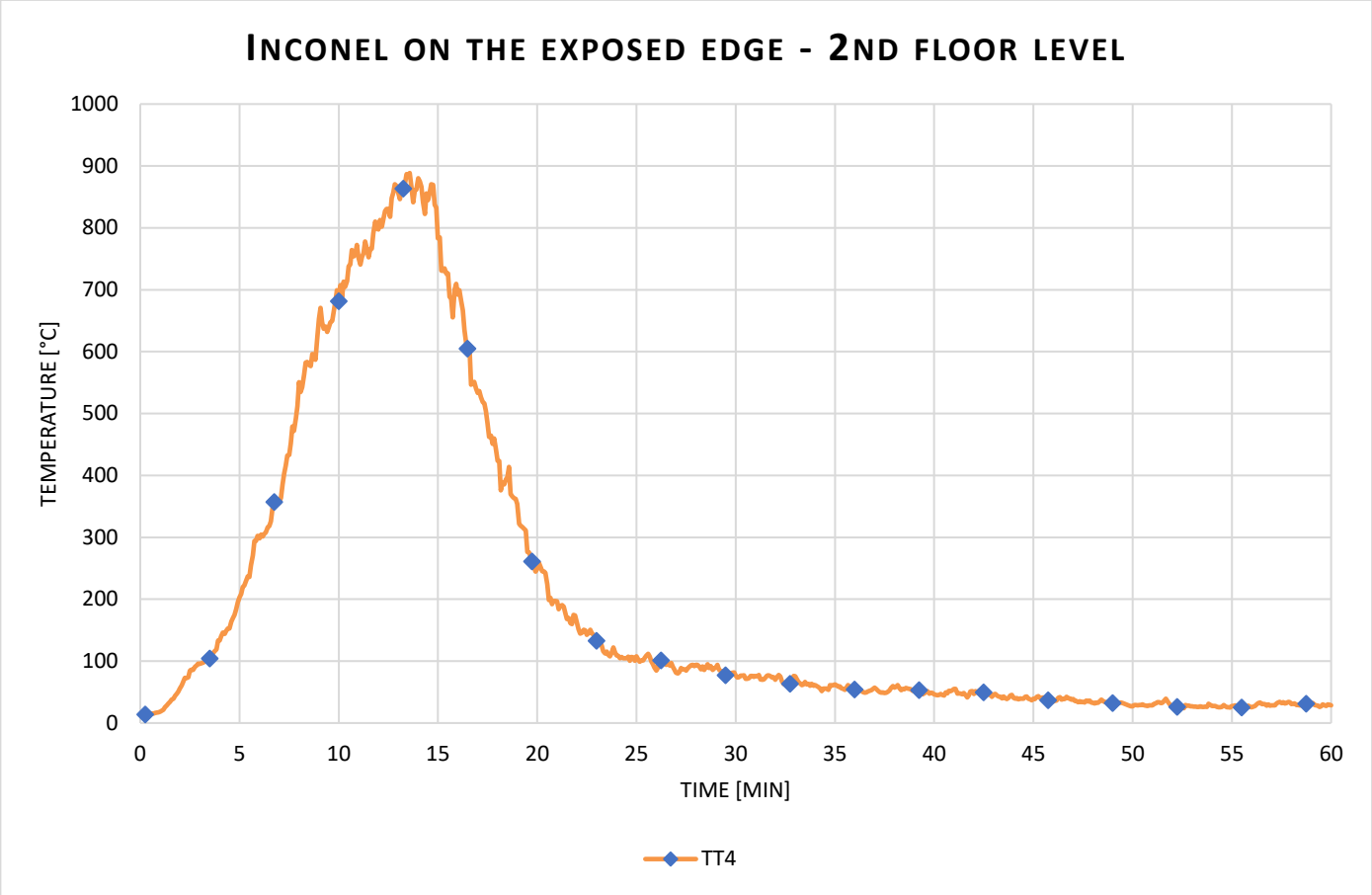

Radiant heat calculated from Plate TC

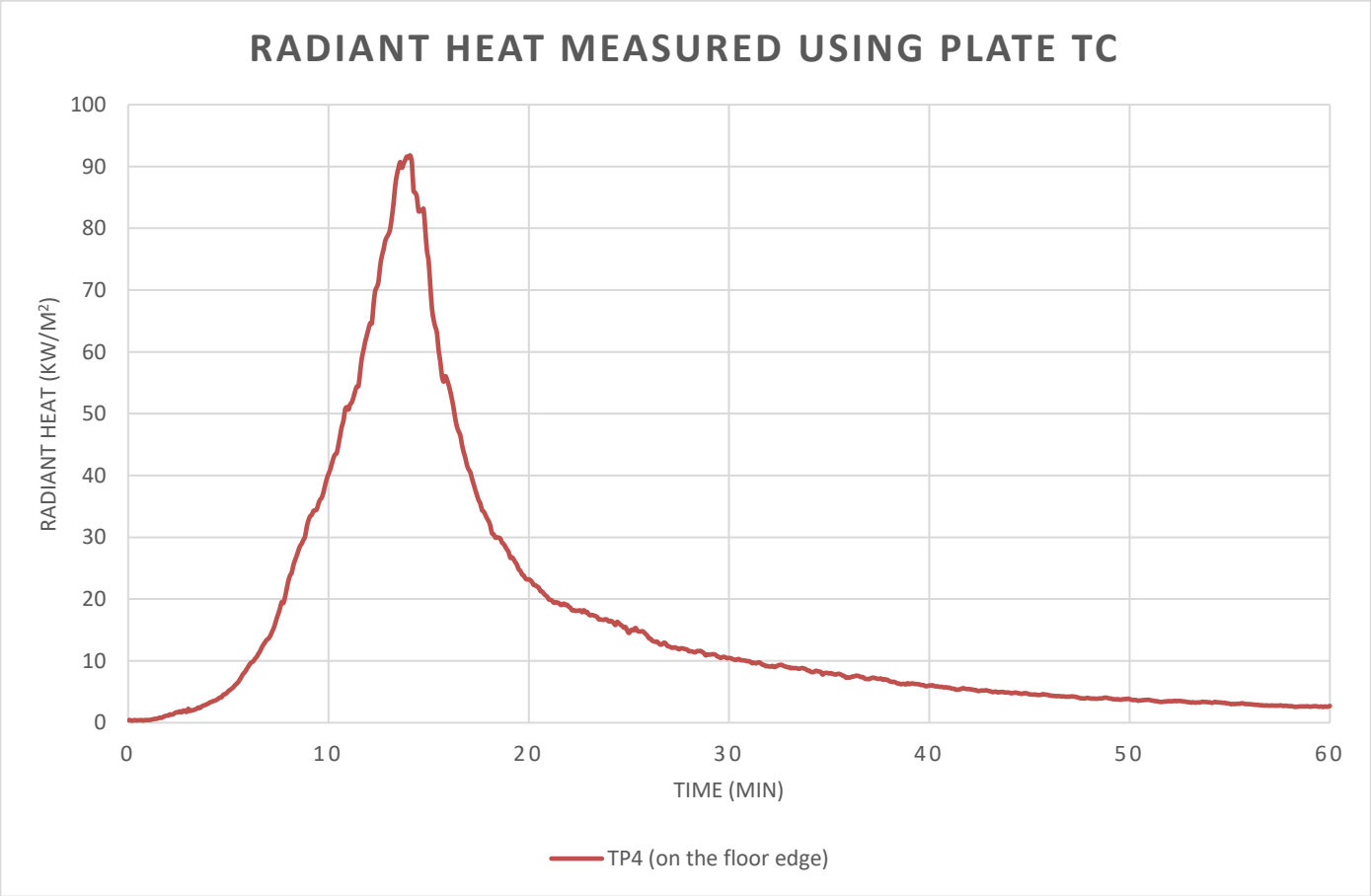

Data measurement from 1st floor handrails.

Layout

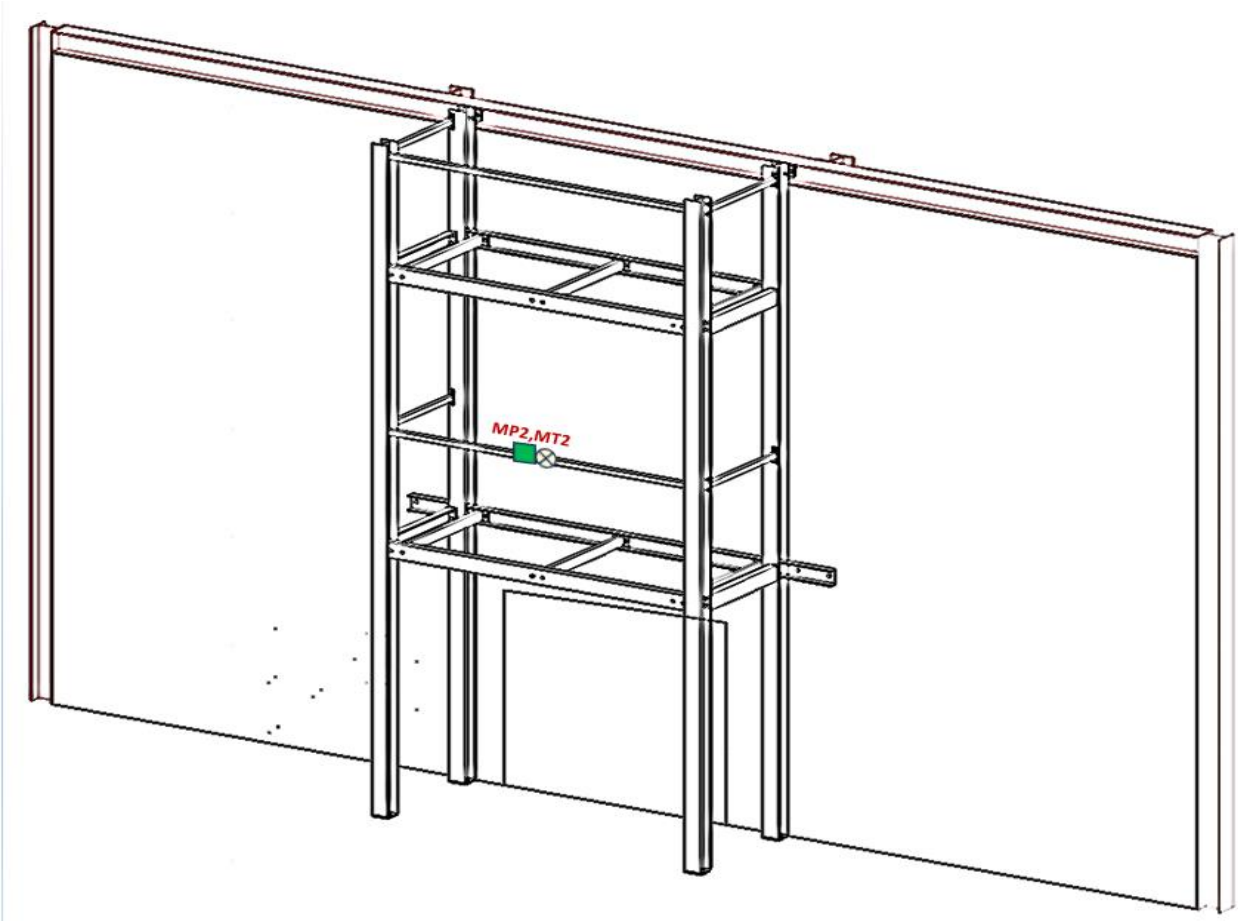

Temperature measured from the Plate TC on 1st floor handrails

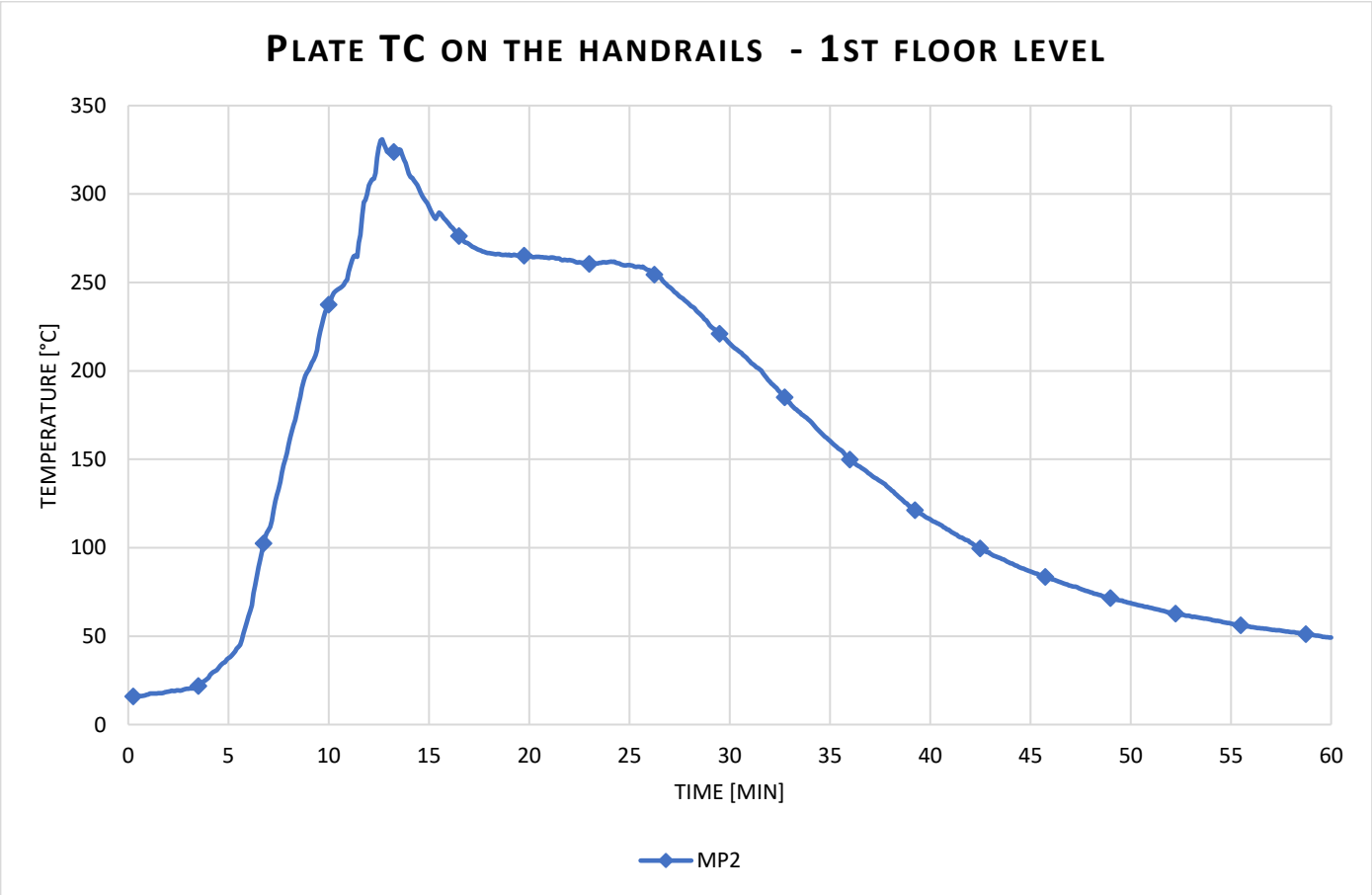

Temperature measured from the Inconel on 1st floor handrails

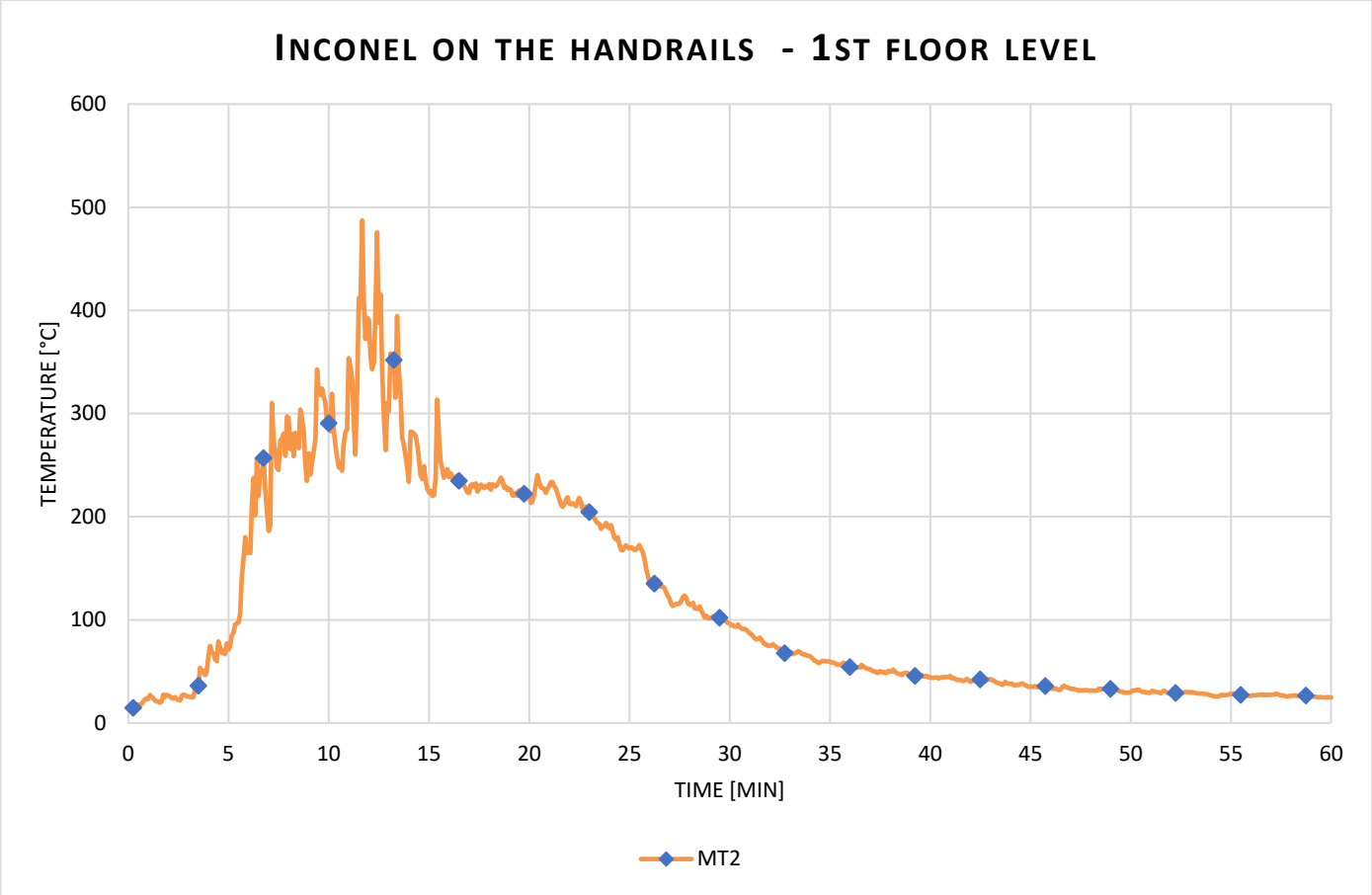

Radiant heat calculated from Plate TC

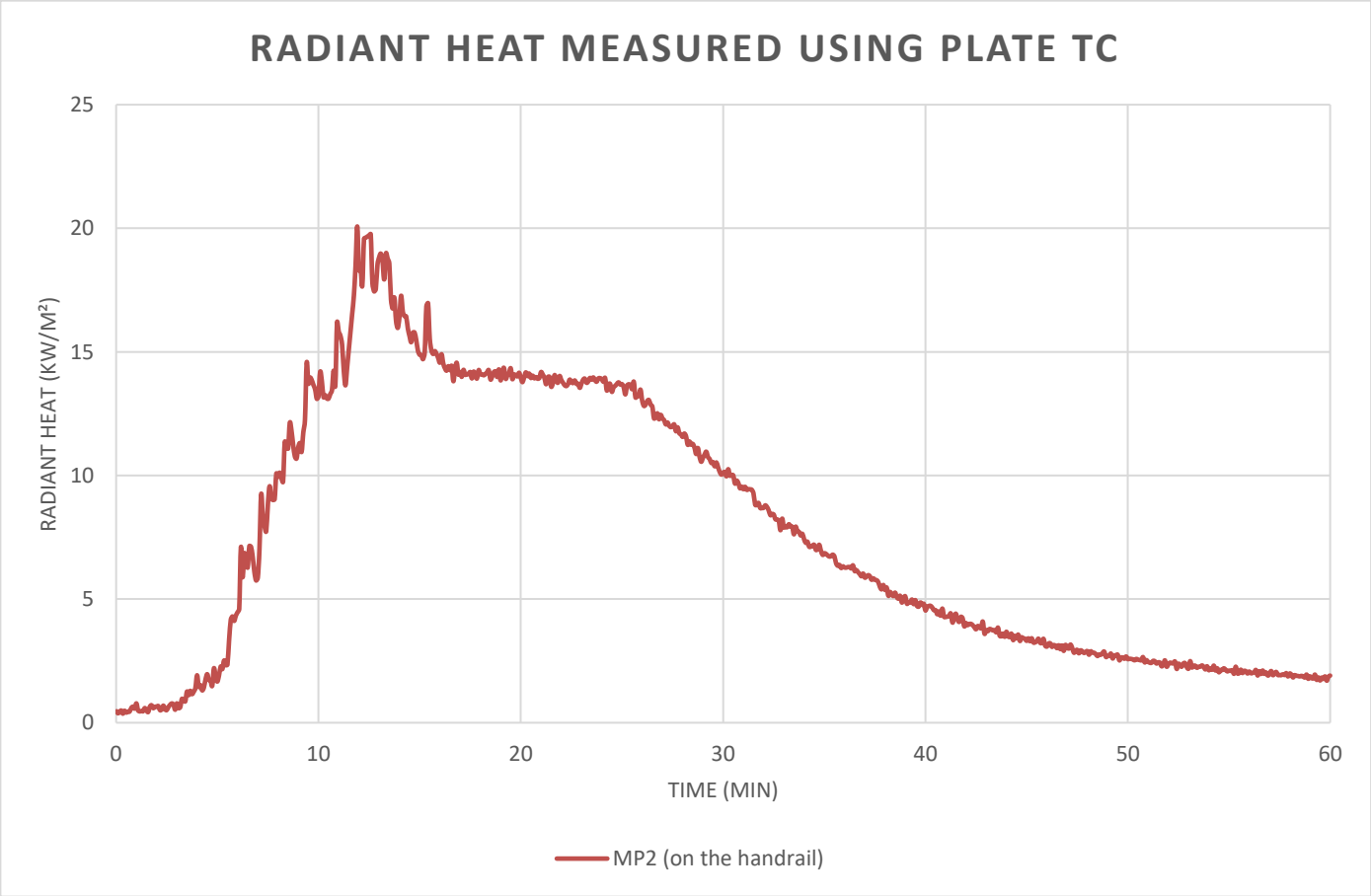

Data measurement from 2nd floor handrails.

Layout

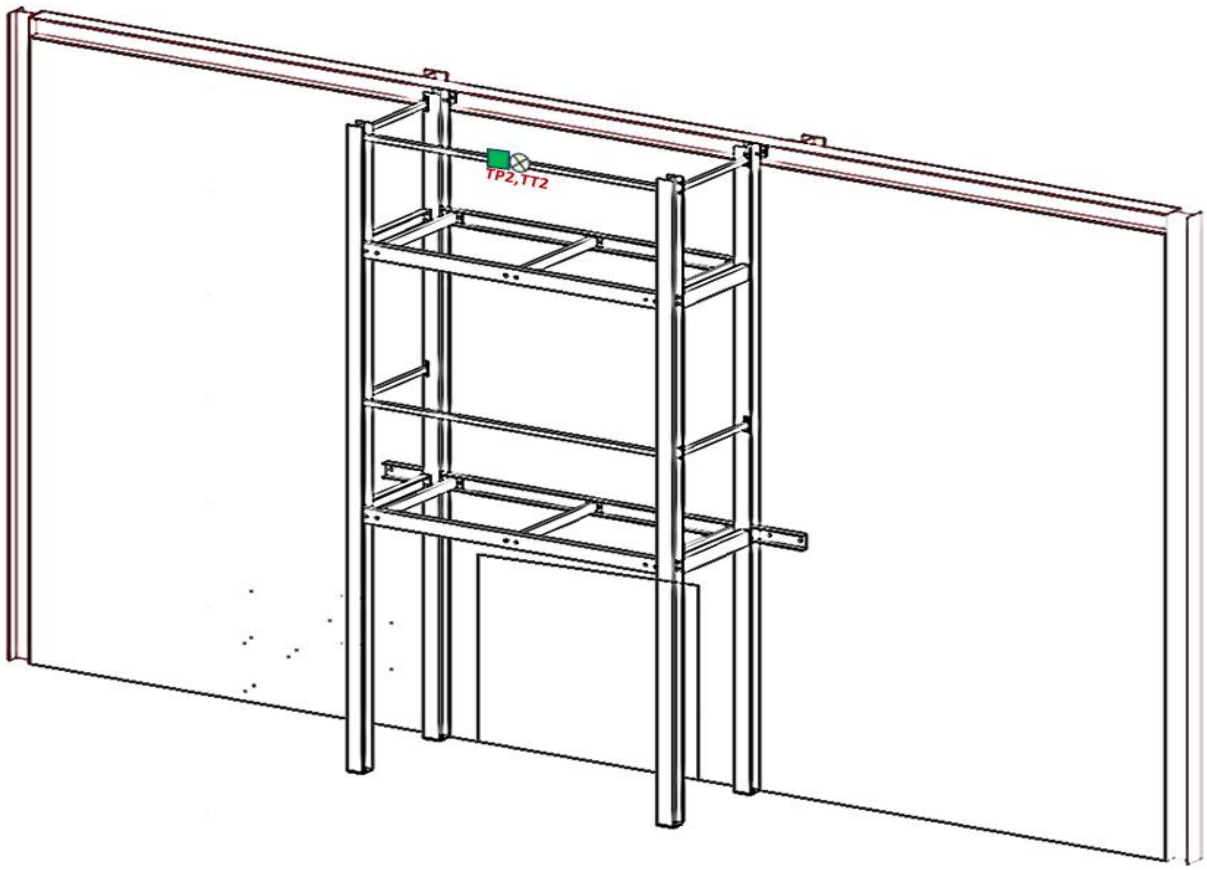

Temperature measured from the Plate TC on 2nd floor handrails (Broken during test after 27min 30 sec).

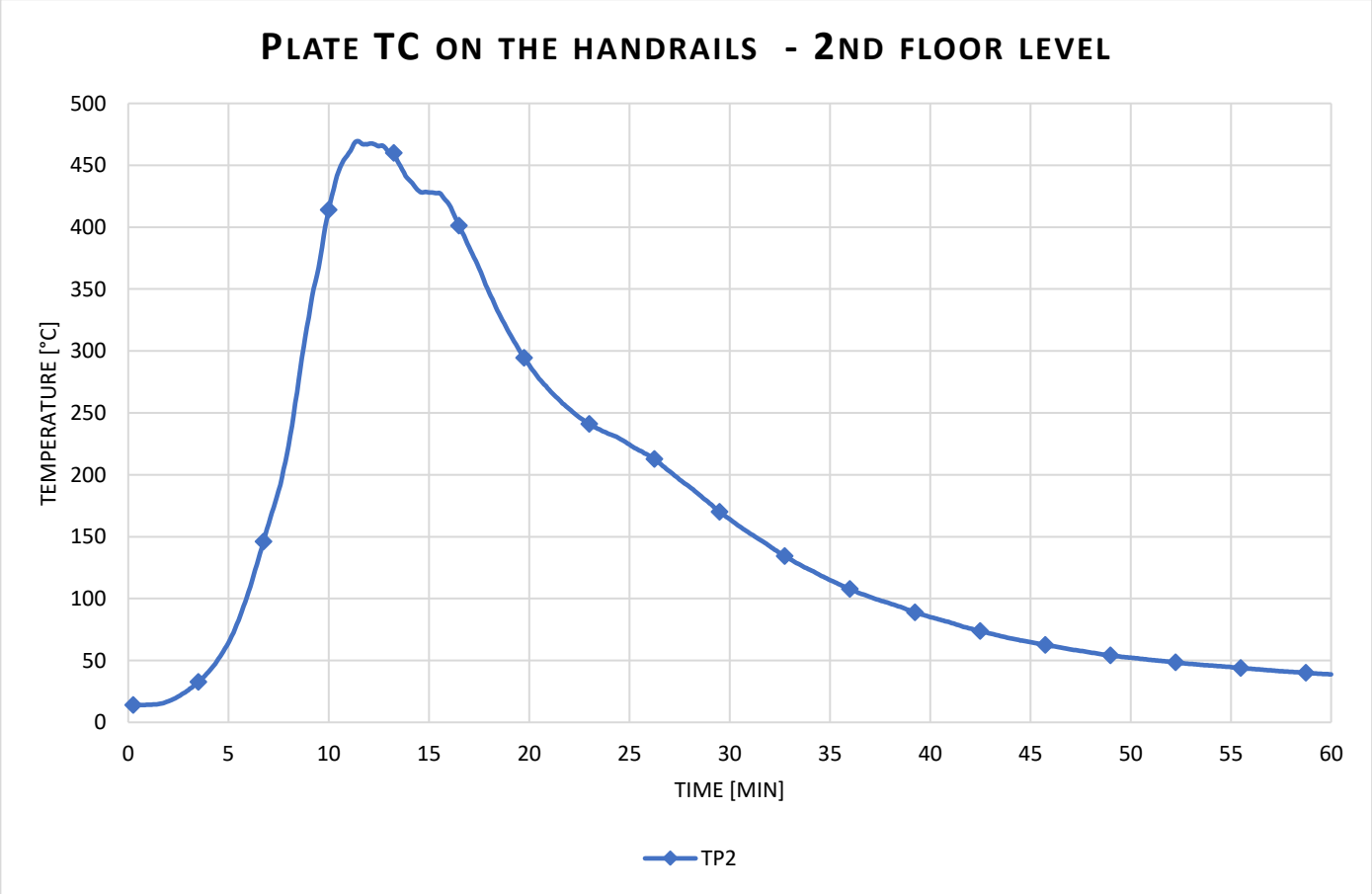

Temperature measured from the Inconel on 2nd floor handrails

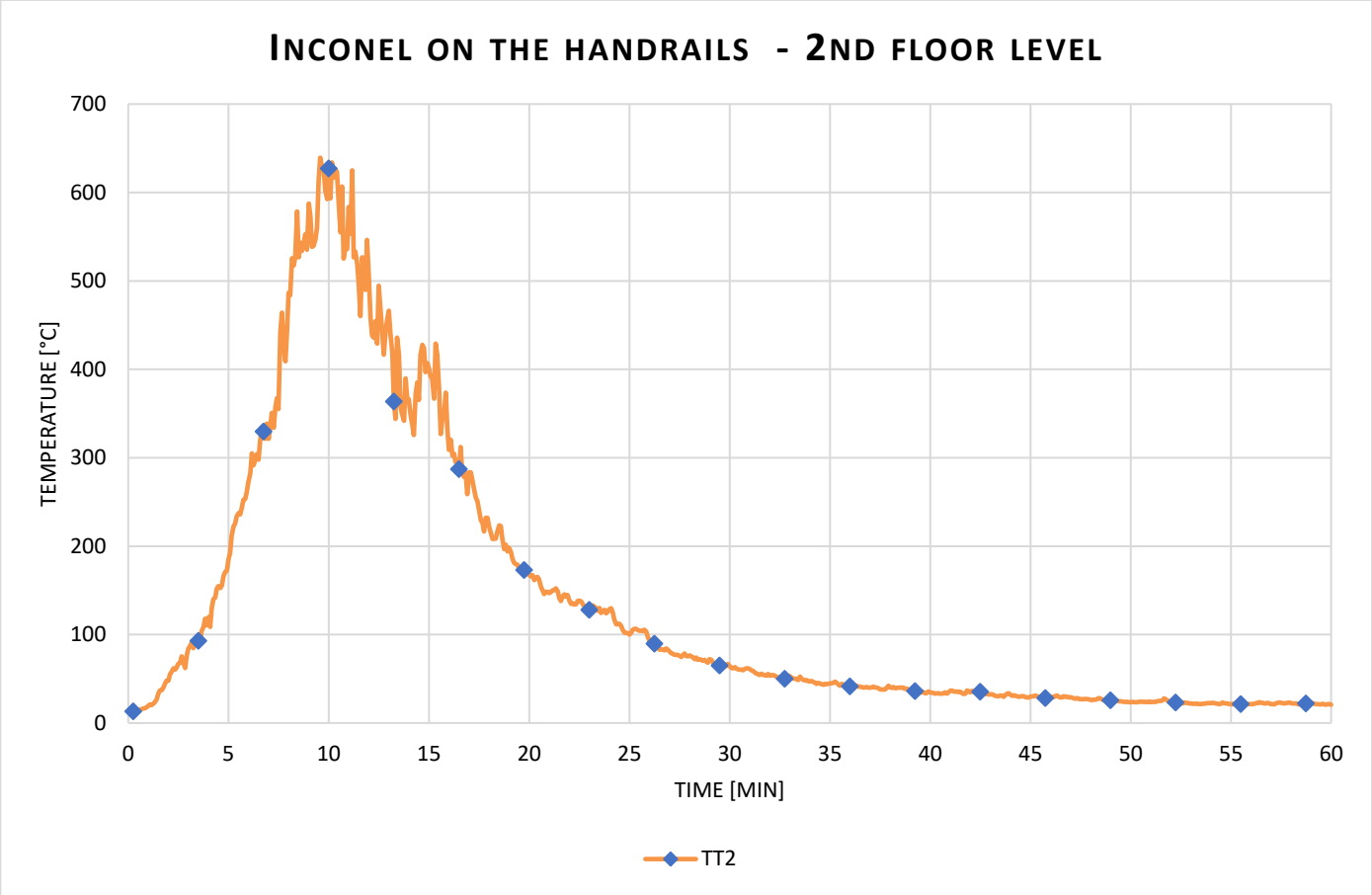

Radiant heat calculated from Plate TC

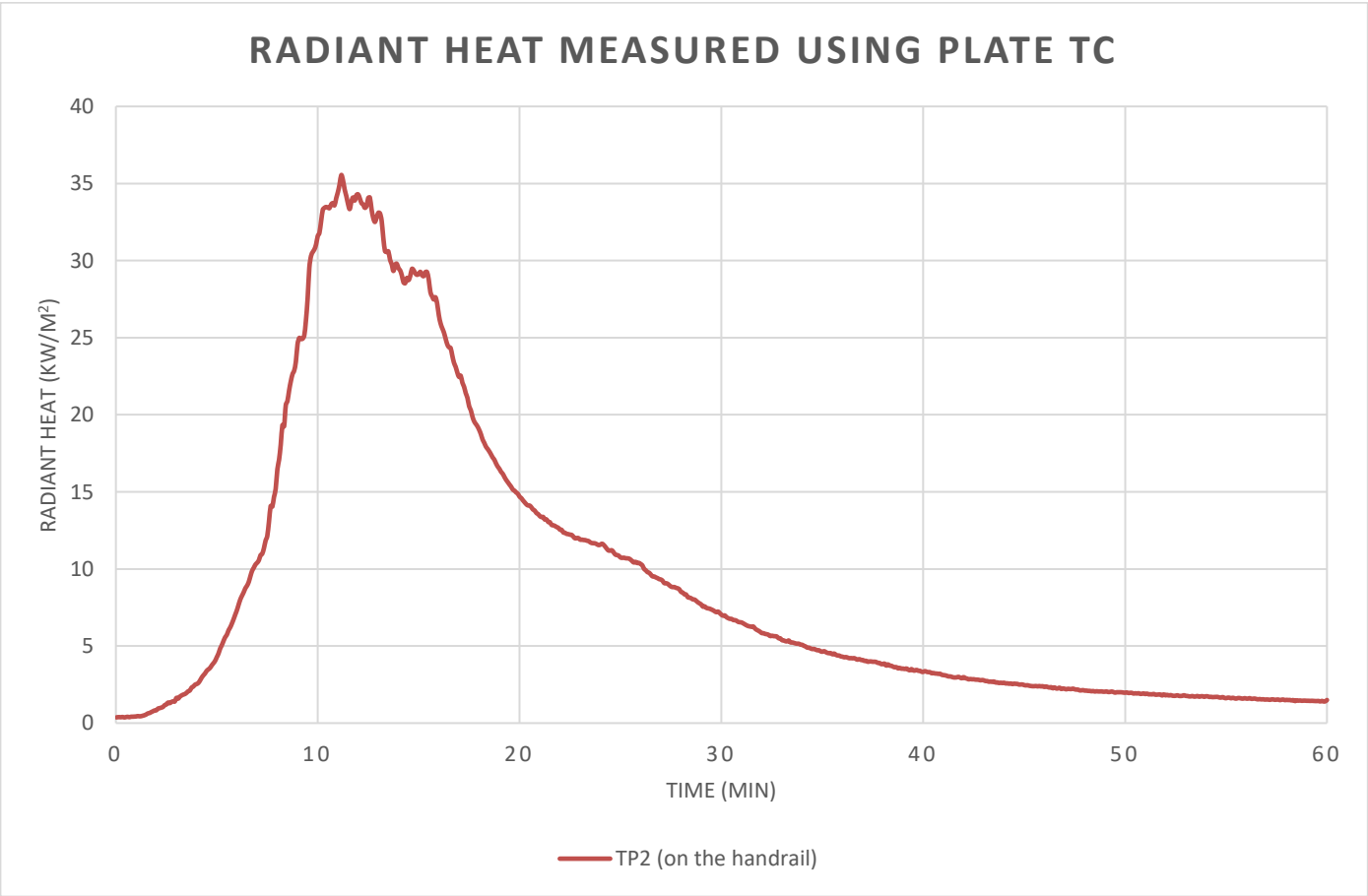

Data measurement from Ground floor sidewalls

Layout

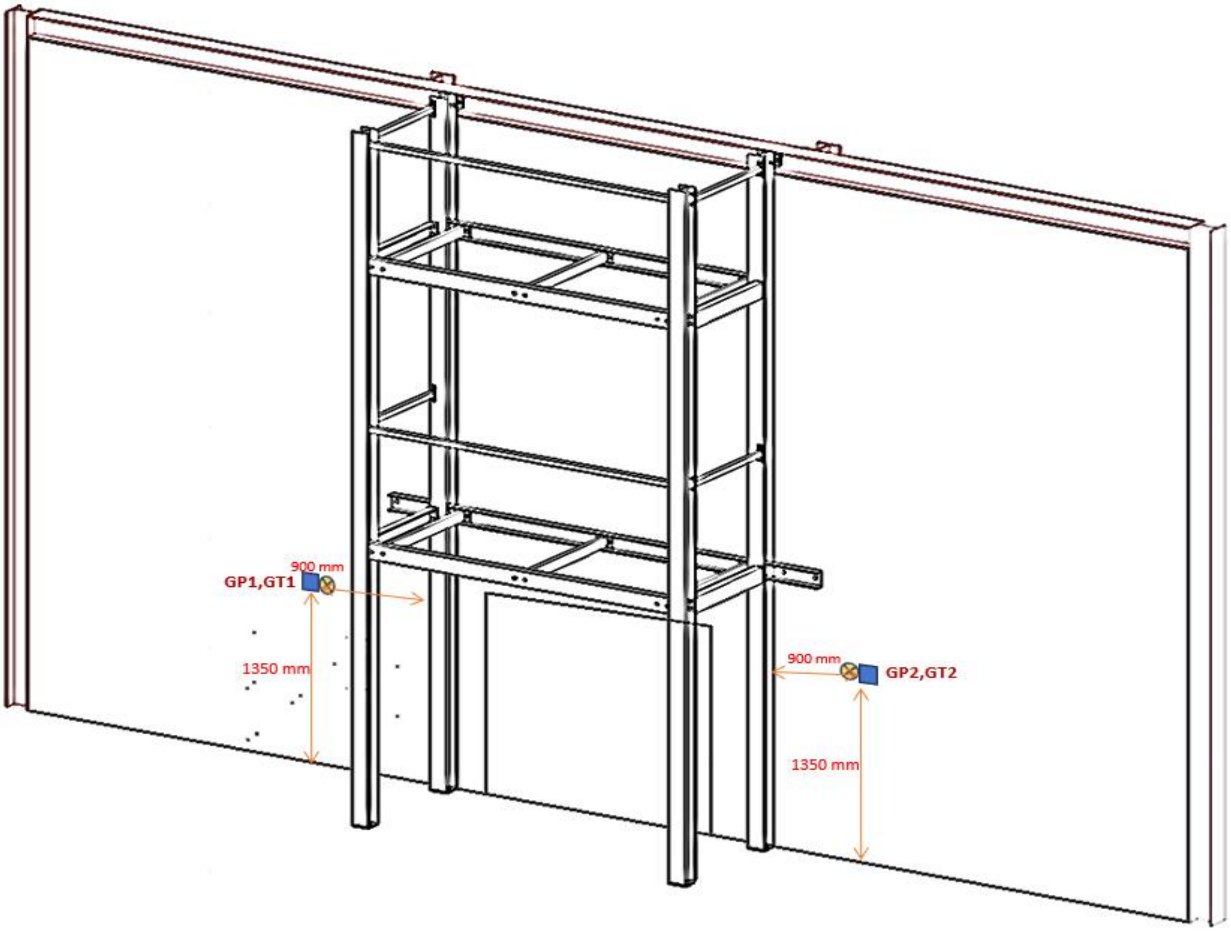

Temperature measured from the Plate TC's from Ground floor sidewalls

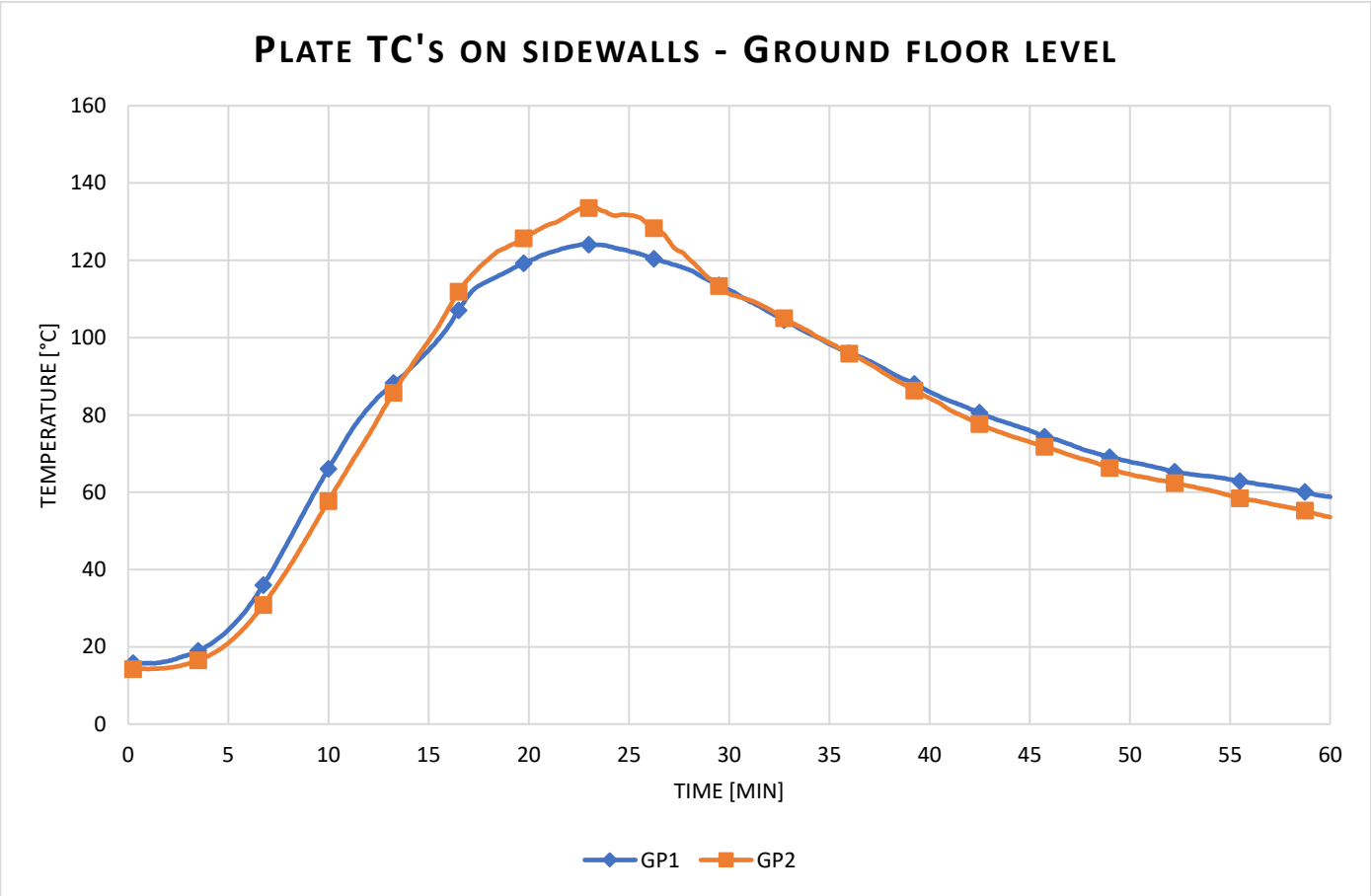

Temperature measured from the Inconel from 1st floor sidewall

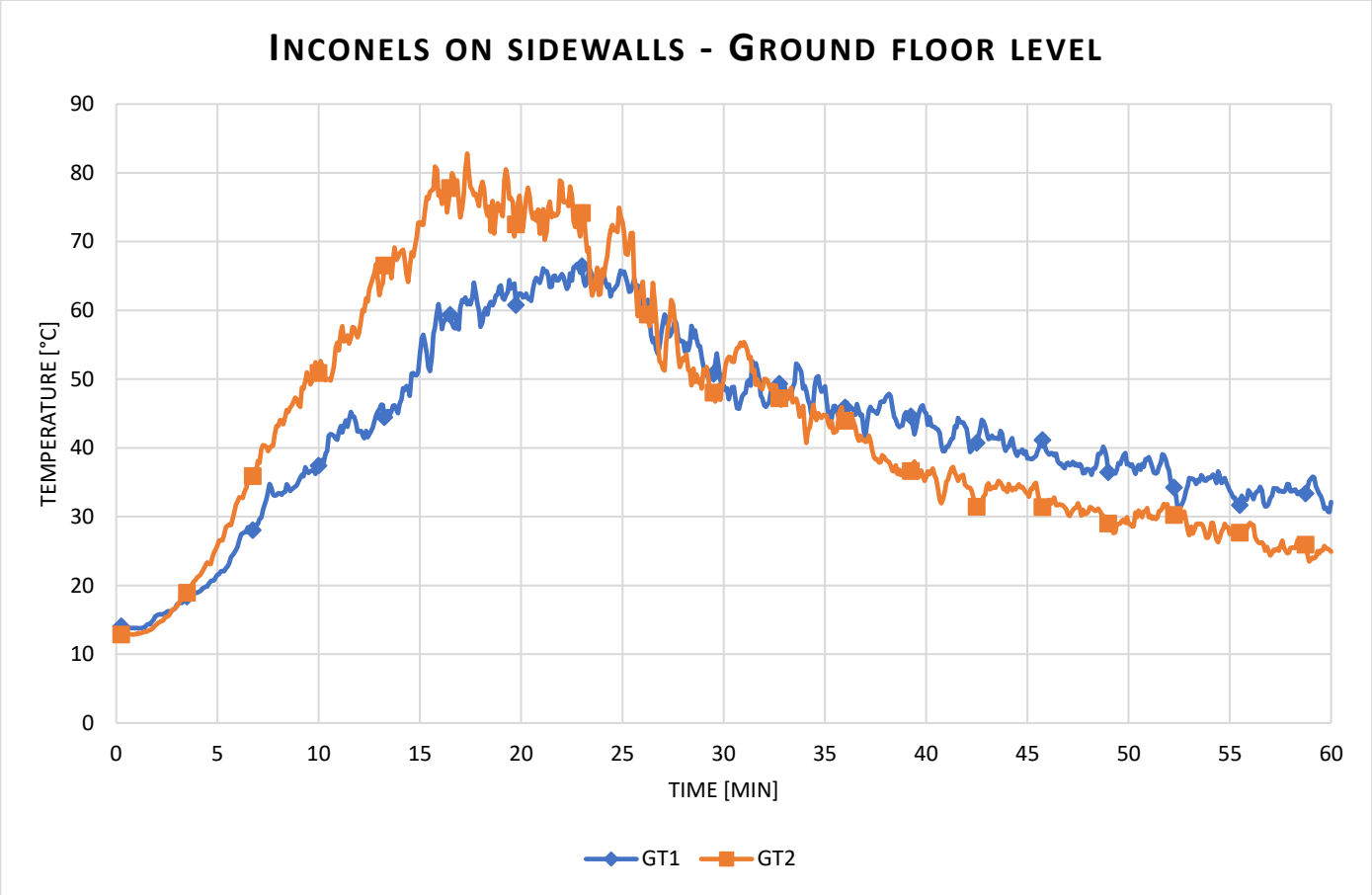

Radiant heat calculated from Plate TC's

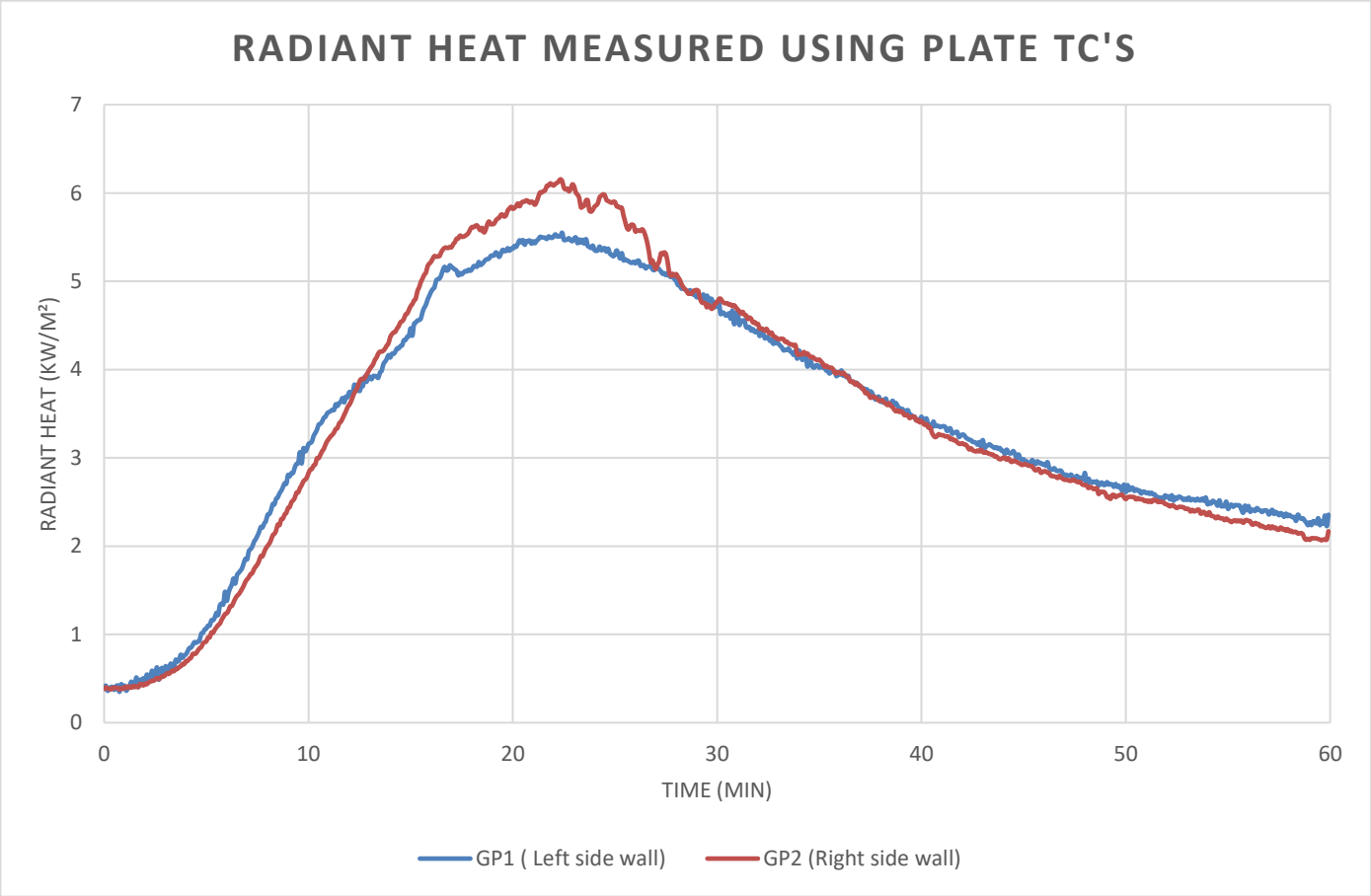

Data measurement from 1st floor sidewall

Layout

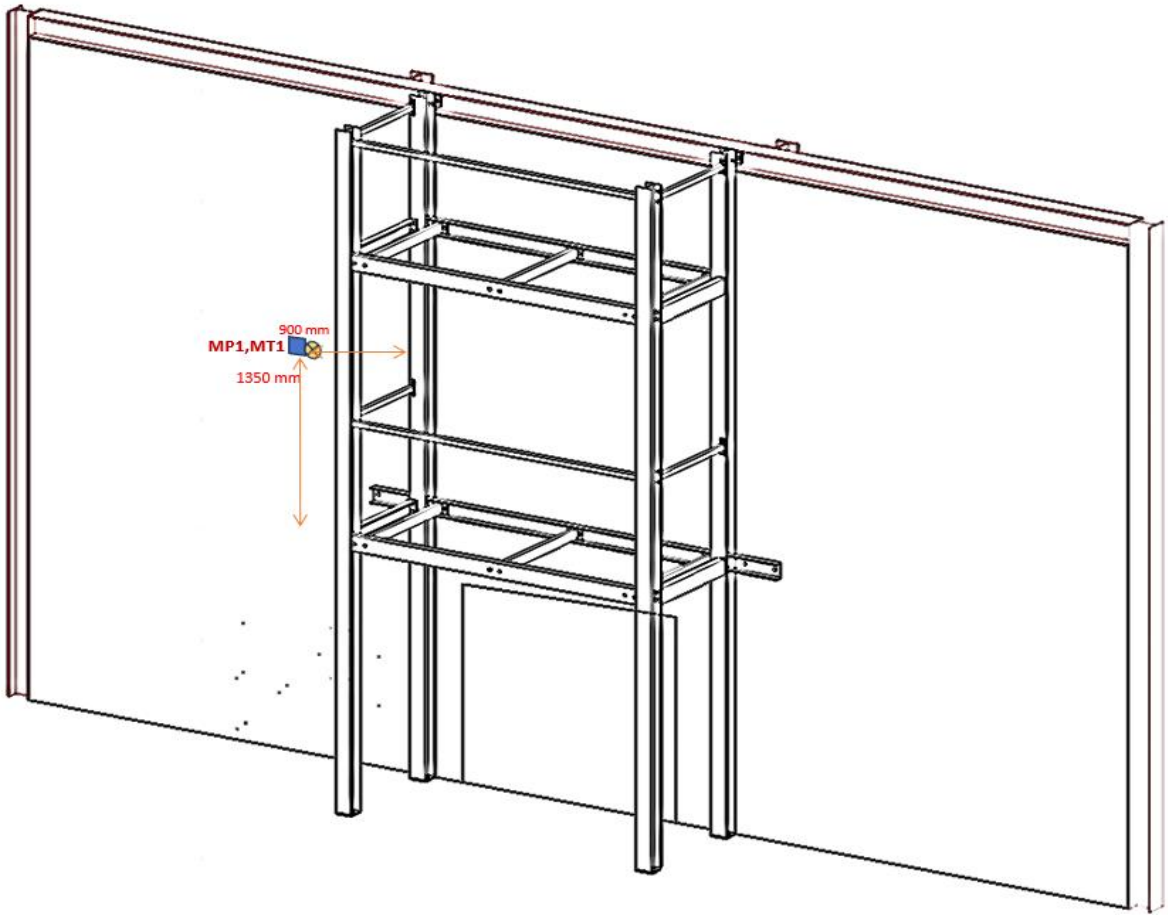

Temperature measured from the Plate TC from 1st floor sidewall

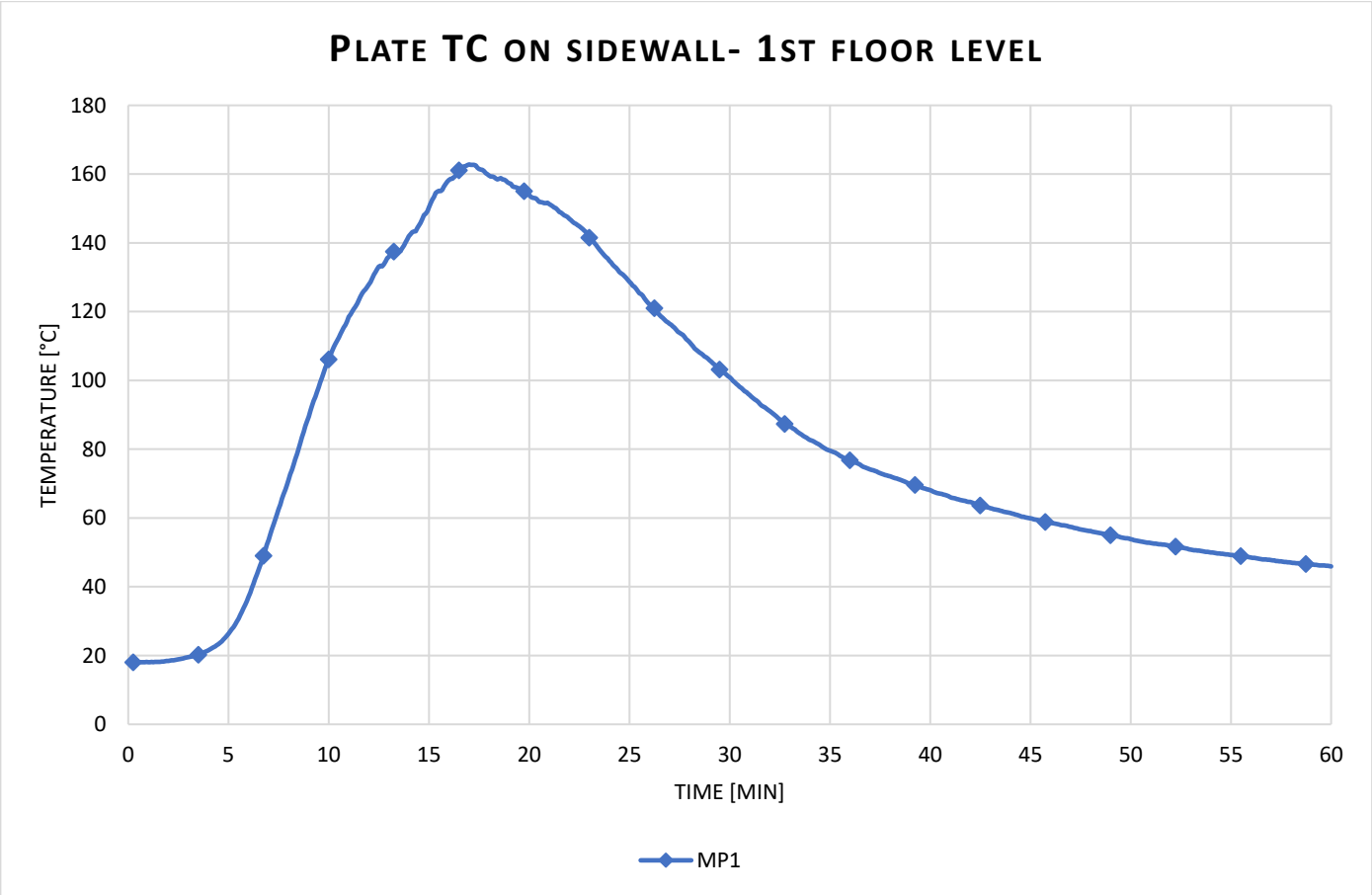

Temperature measured from the Inconel from 1st floor sidewall

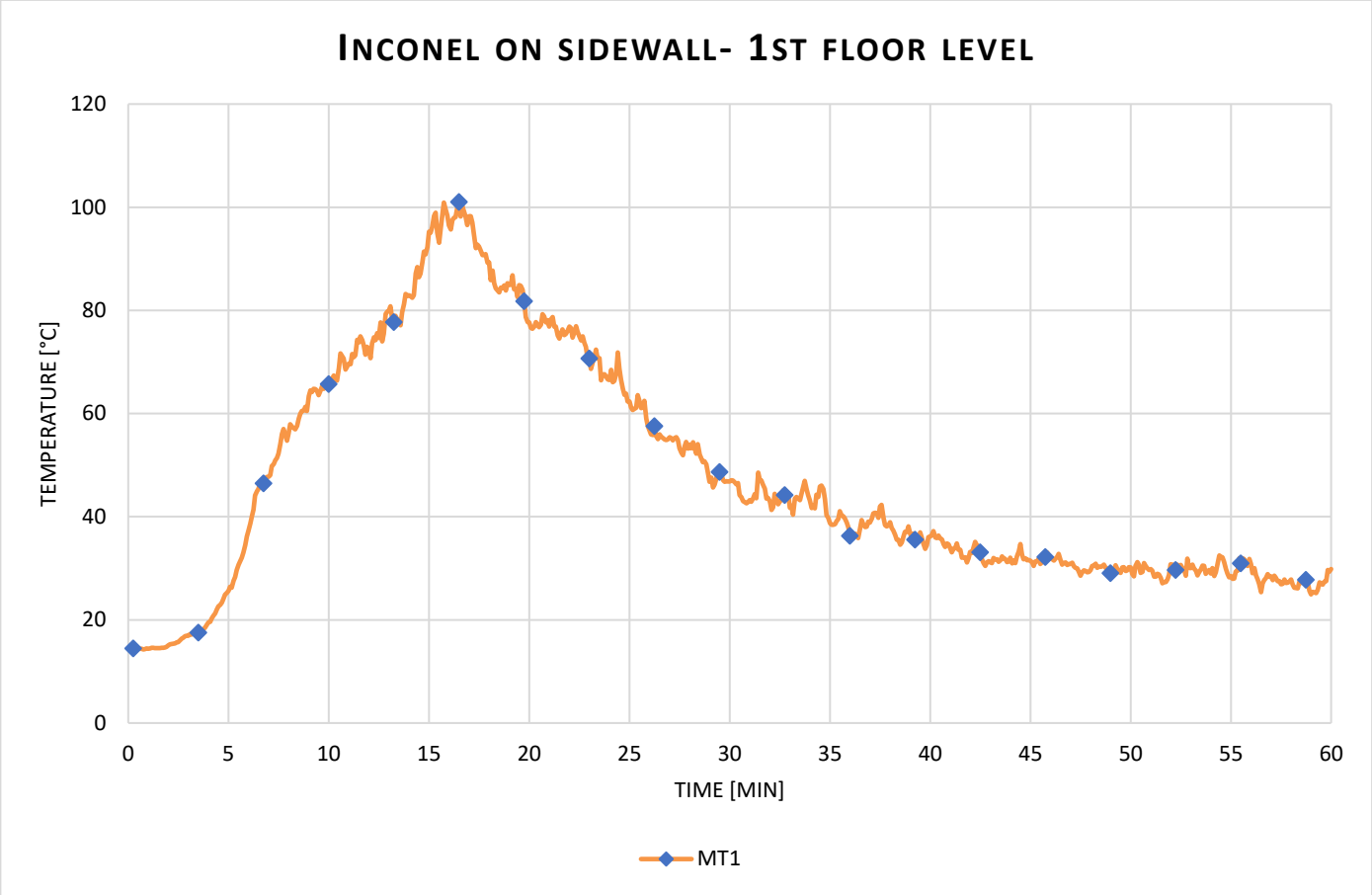

Radiant heat calculated from Plate TC

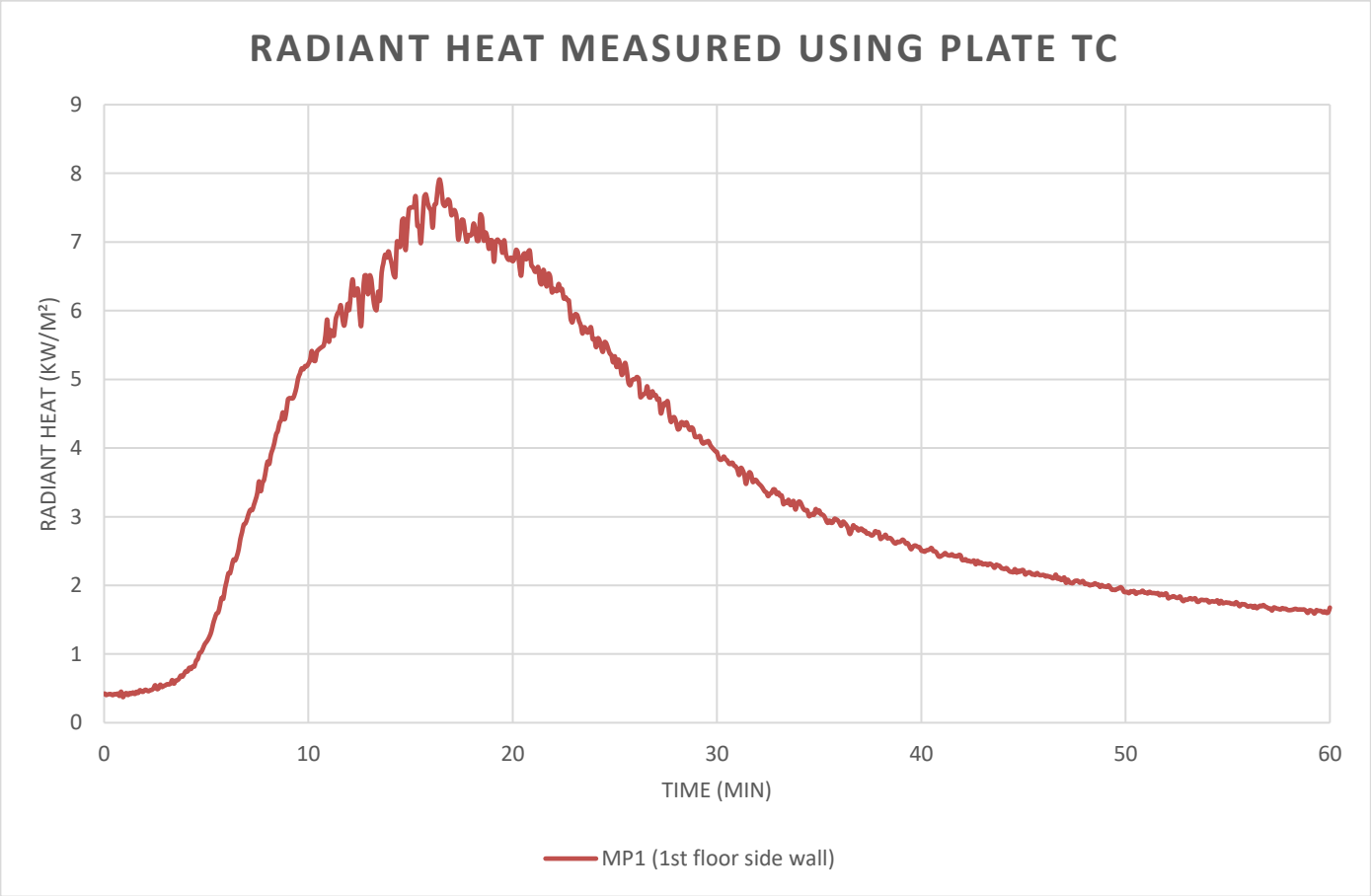

Data measurement from 2nd floor sidewall

Layout

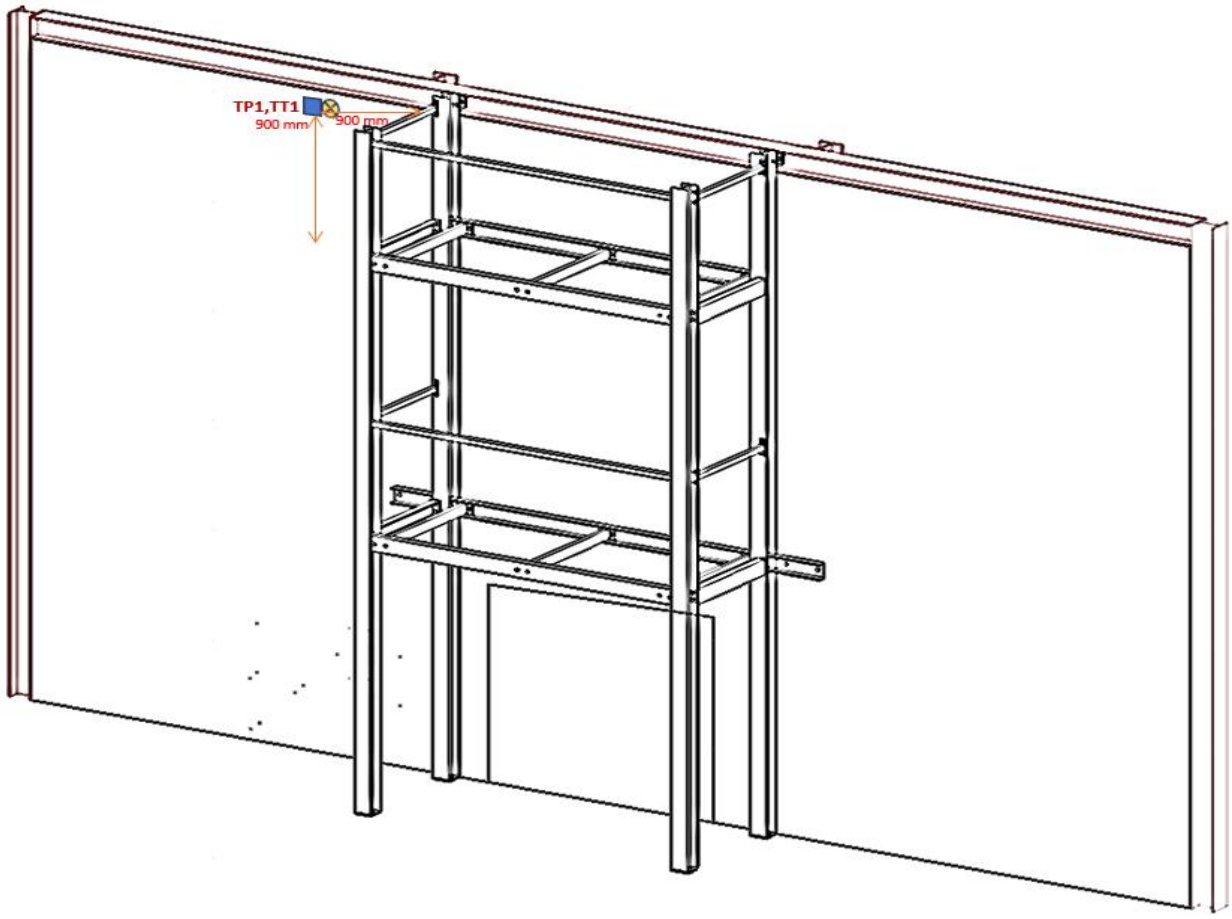

Temperature measured from the Plate TC from 2nd floor sidewall

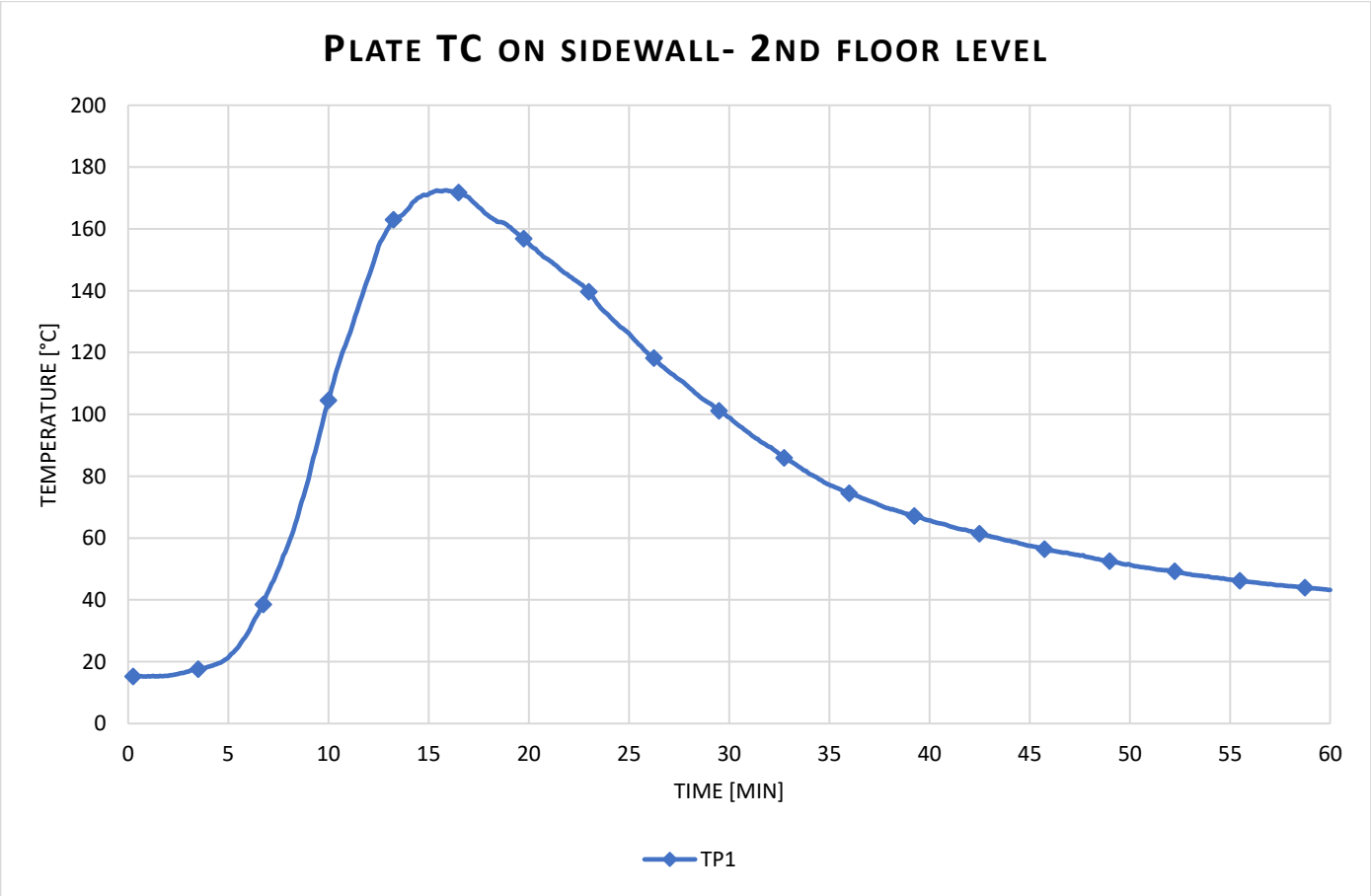

Temperature measured from the Inconel from 2nd floor sidewall

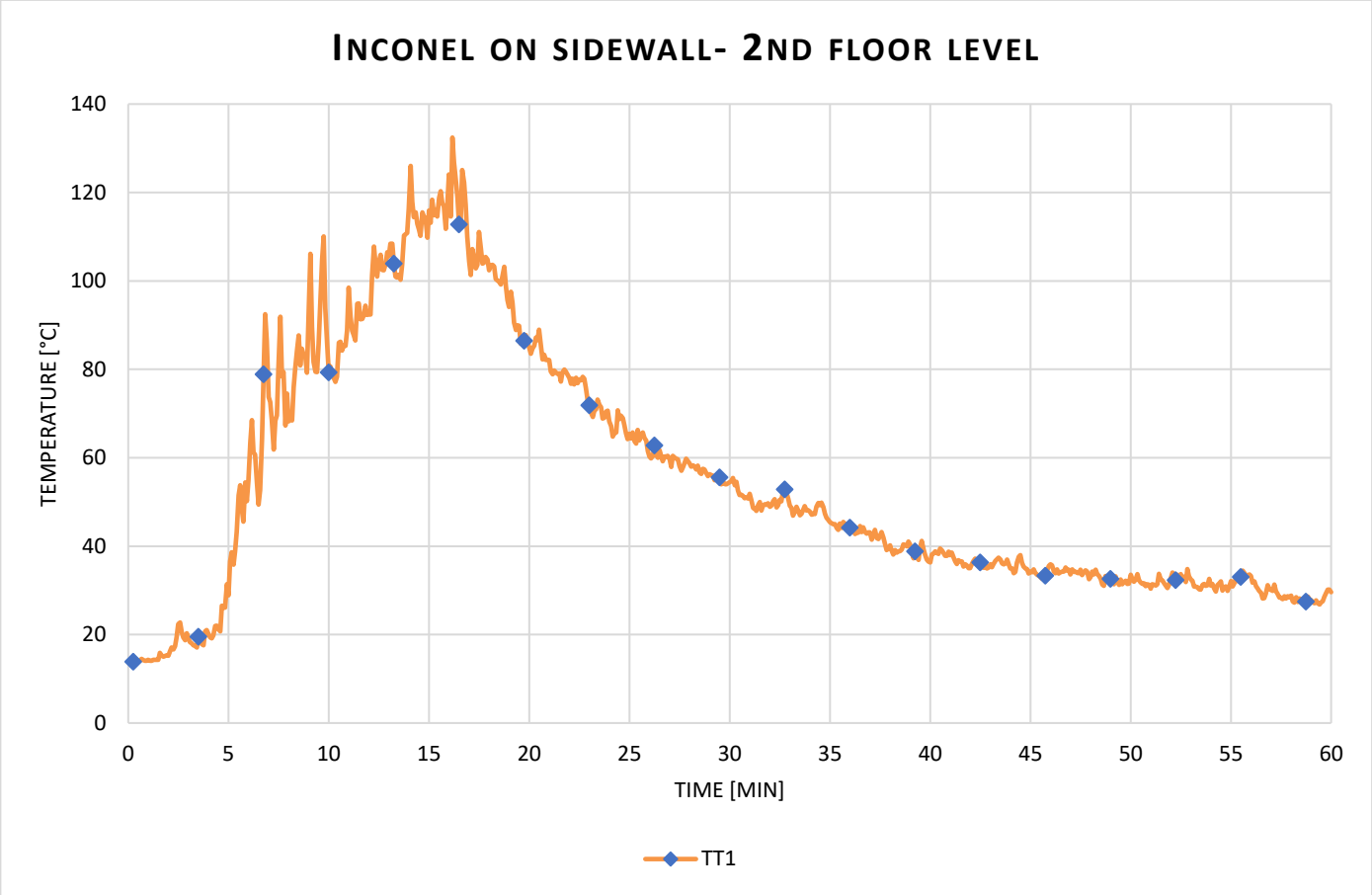

Radiant heat calculated from Plate TC

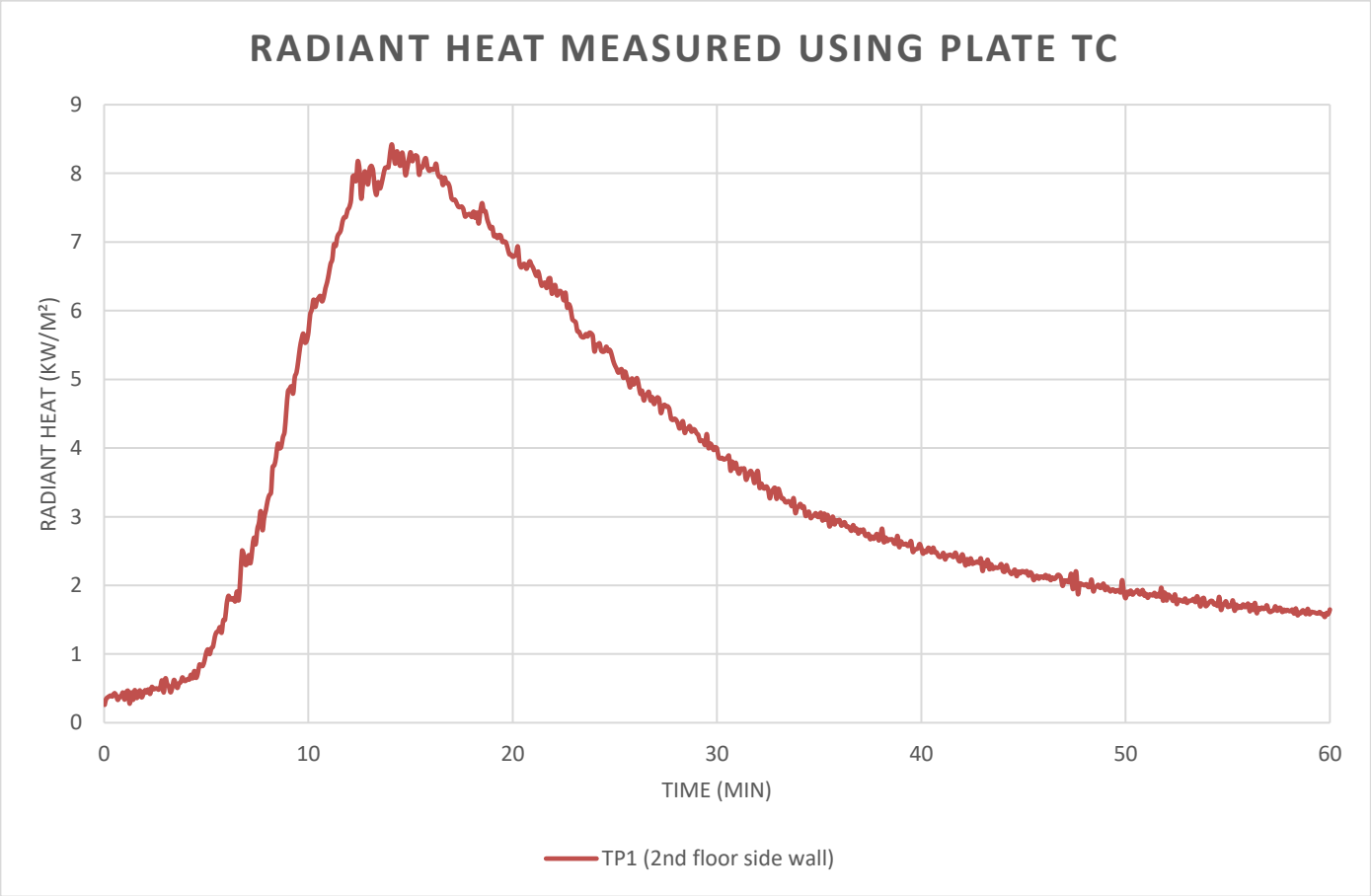

Data measurement from the steel C-section underneath 1st floor

Layout

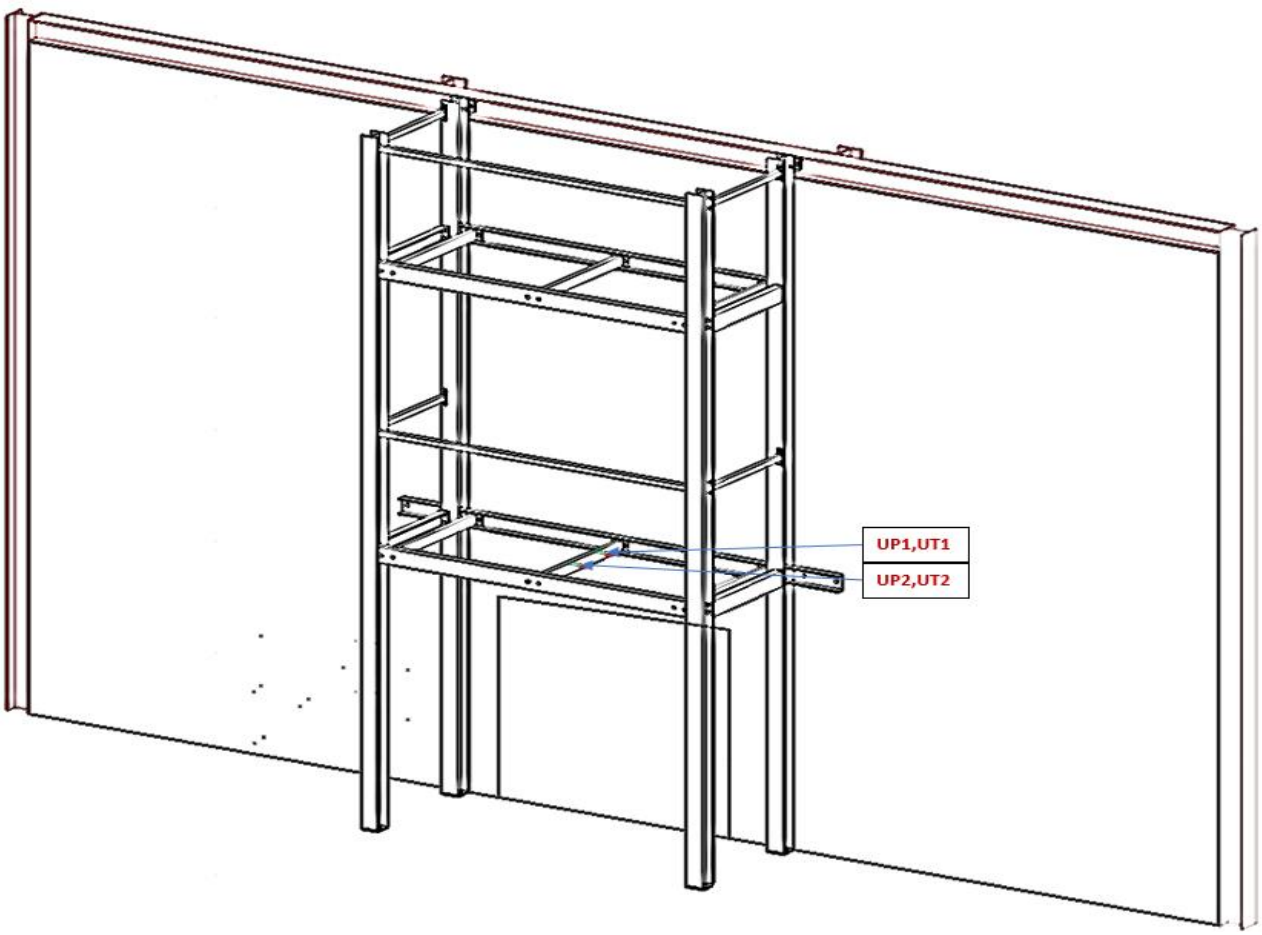

Temperature measured from the Plate TC's on the steel C-section underneath 1st floor

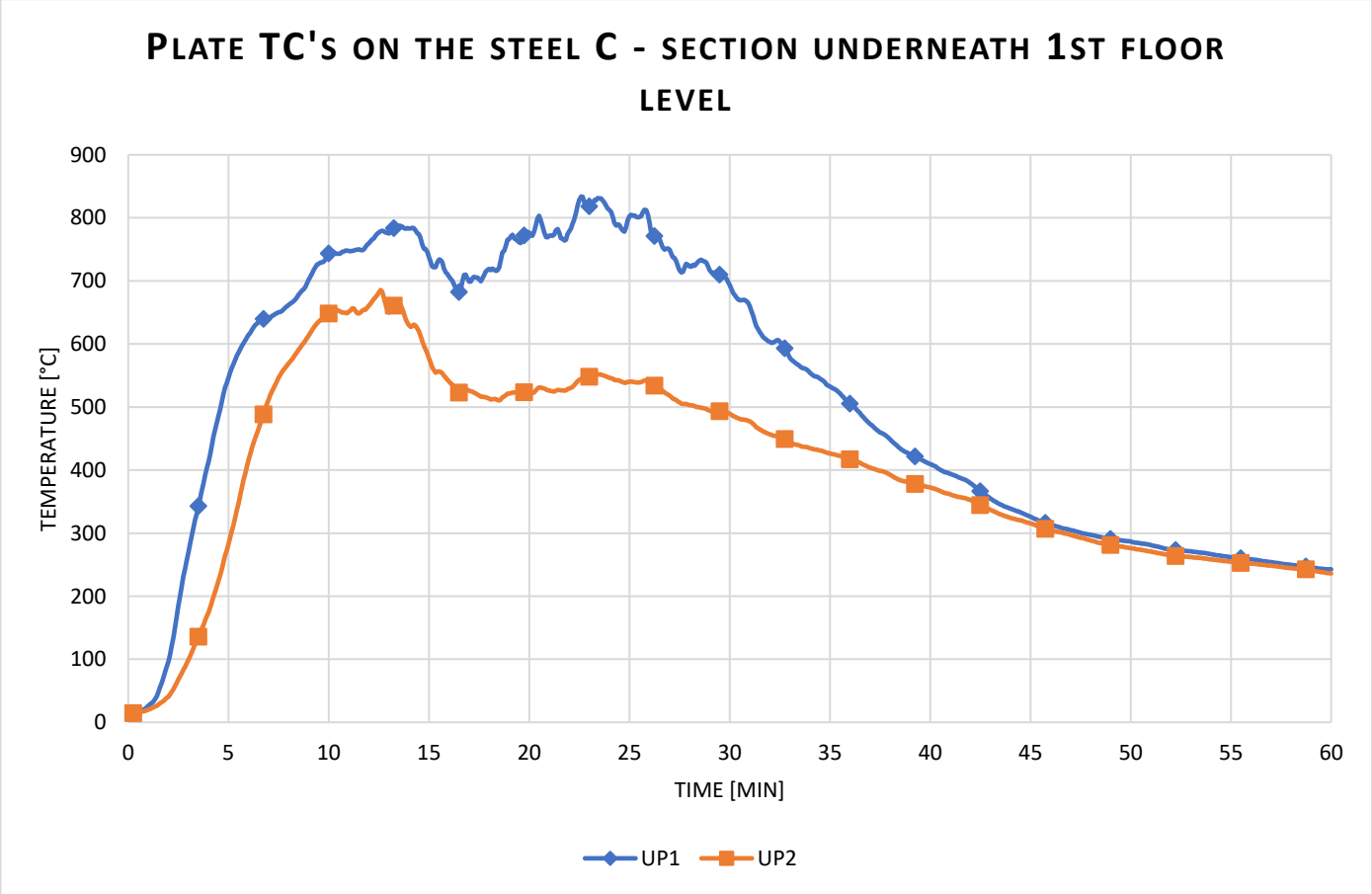

Temperature measured from the Inconels on the steel C-section underneath 1st floor

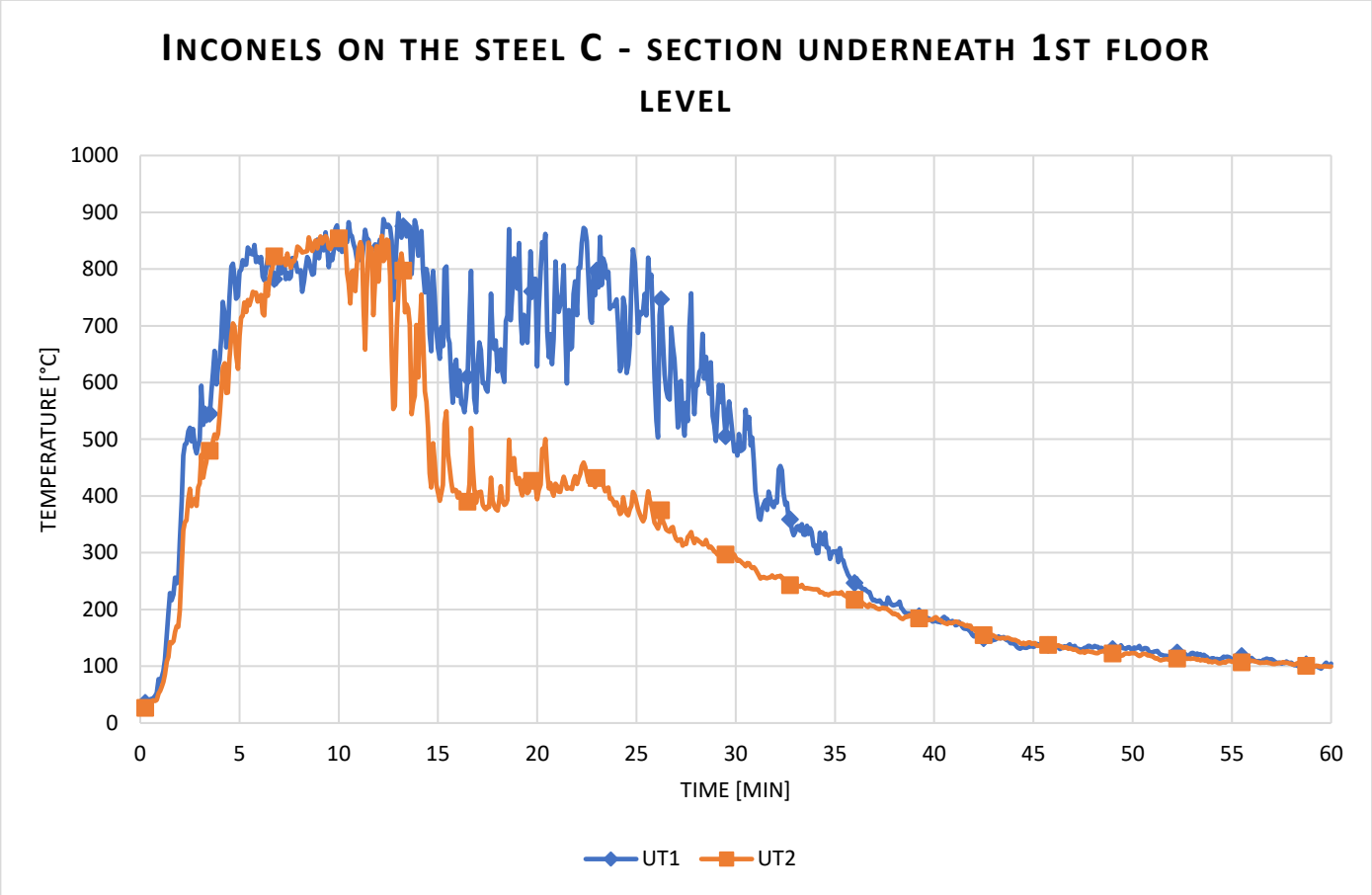

Radiant heat calculated from Plate TC

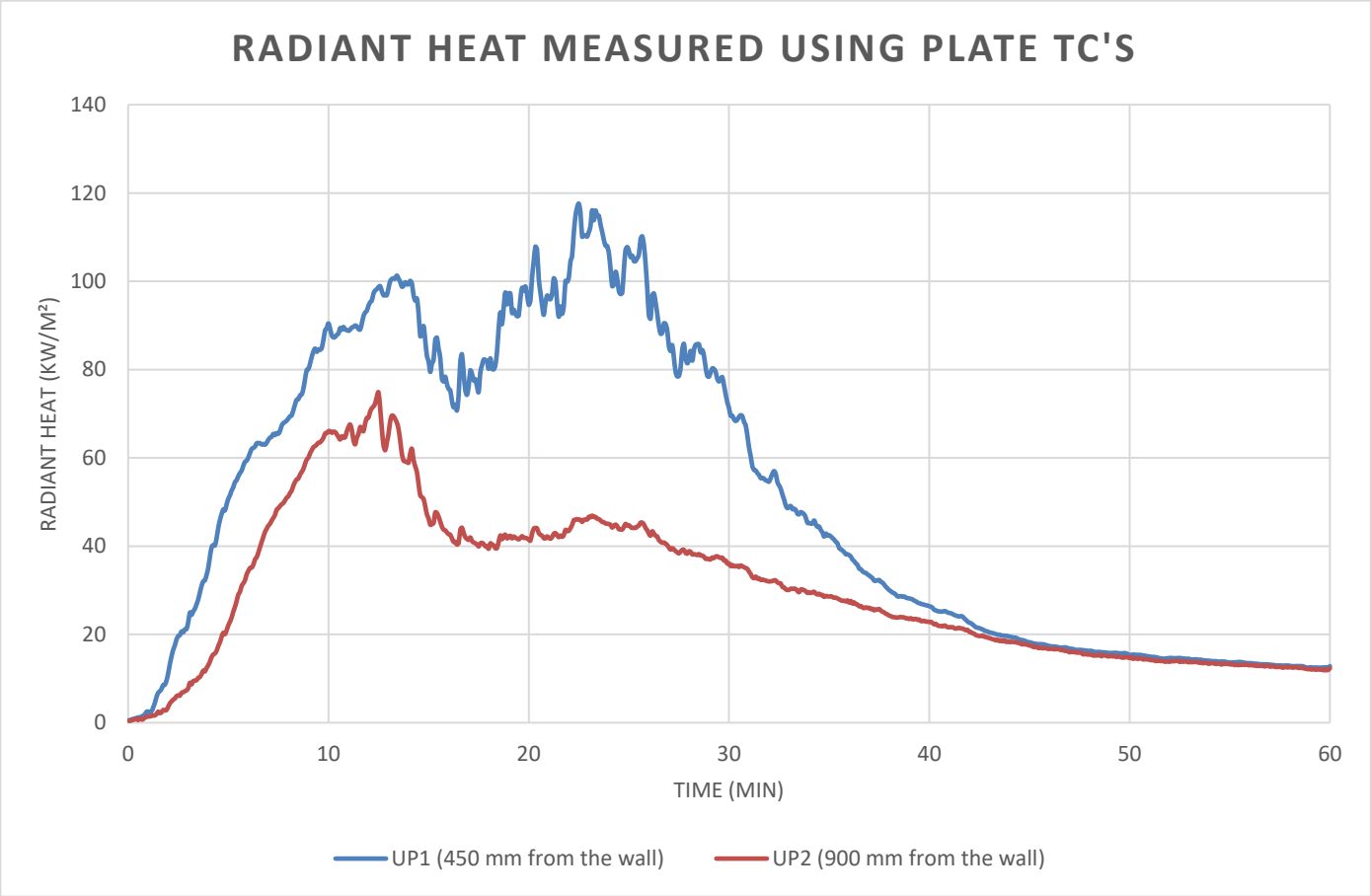

Data measurement from the steel C-section underneath 2nd floor

Layout

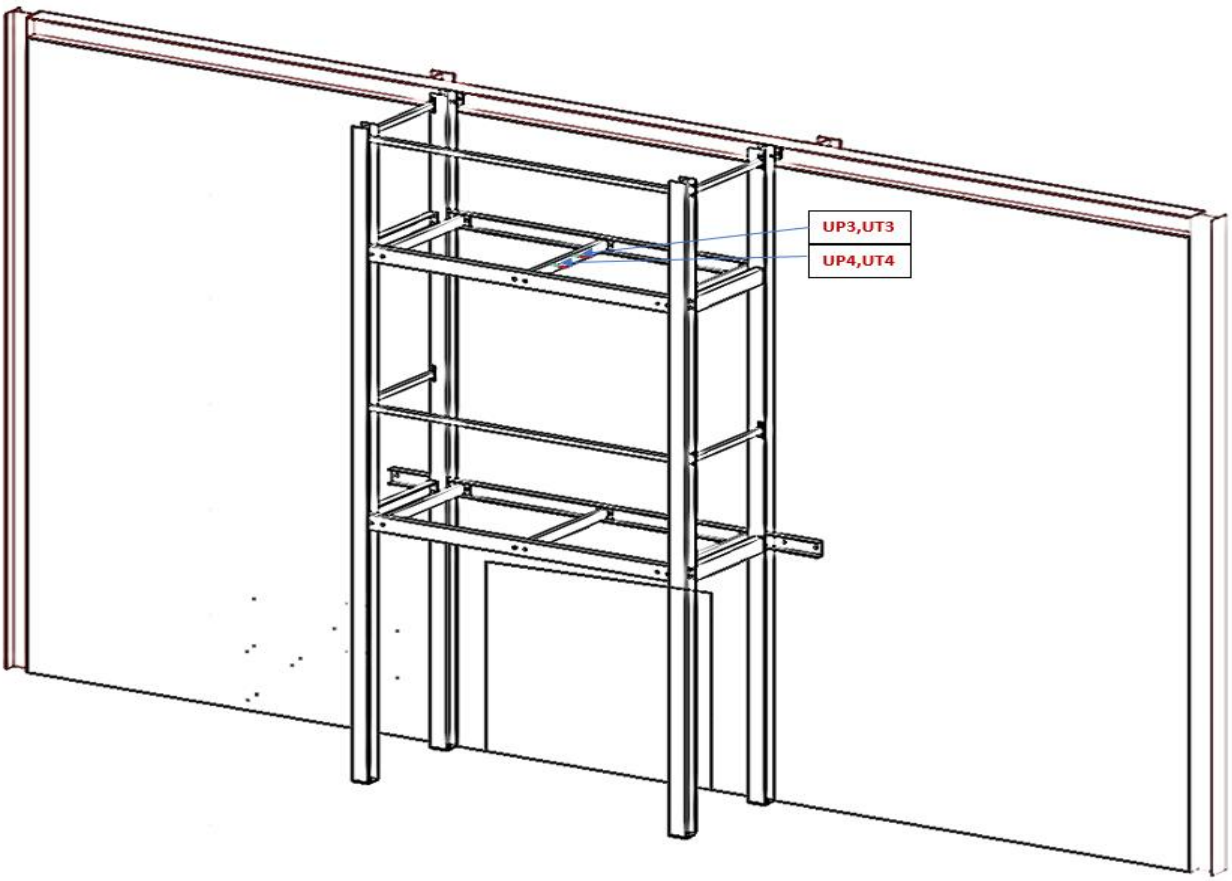

Temperature measured from the Plate TC's on the steel C-section underneath 2nd floor

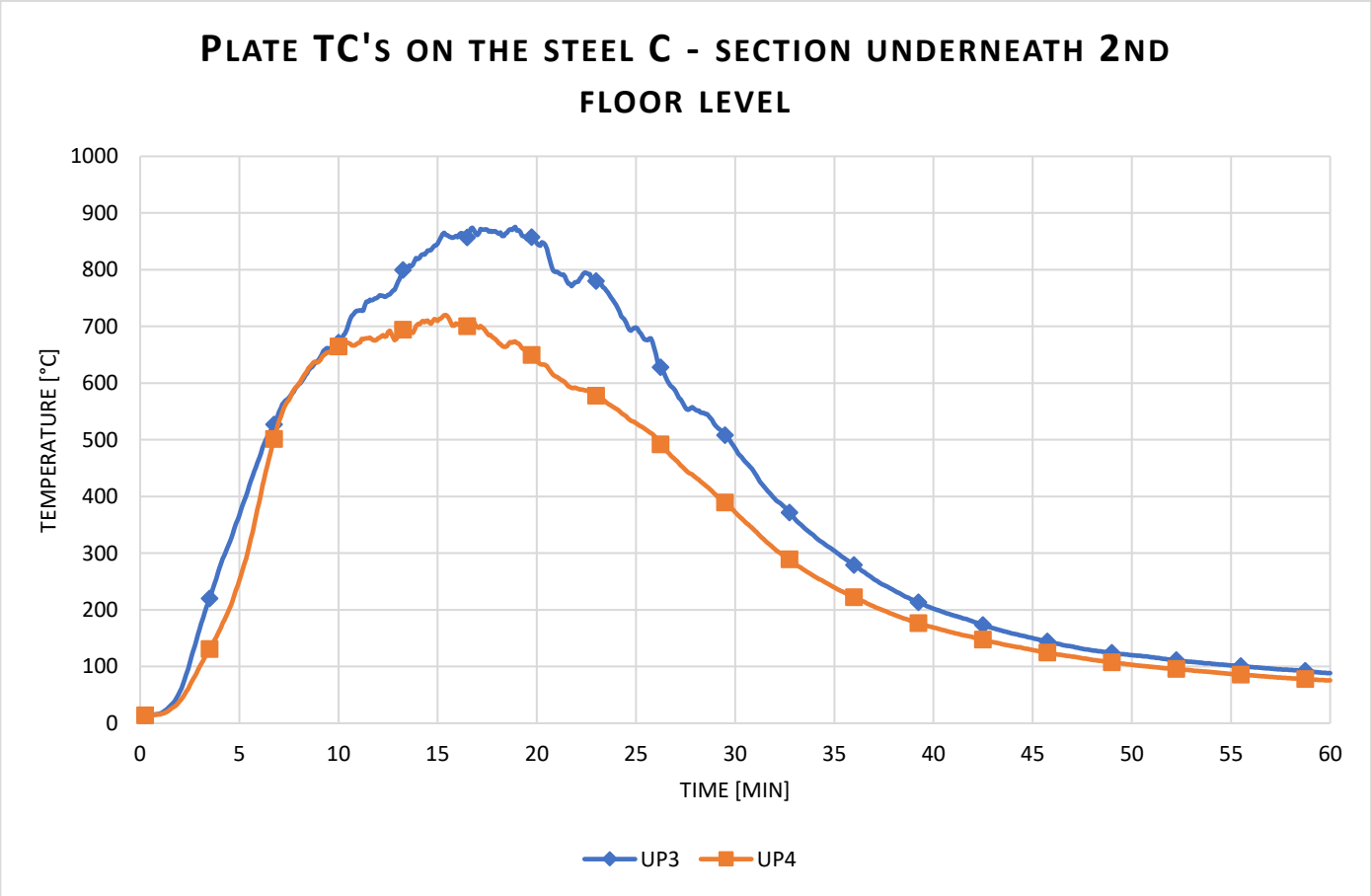

Temperature measured from the Inconels on the steel C-section underneath 2nd floor

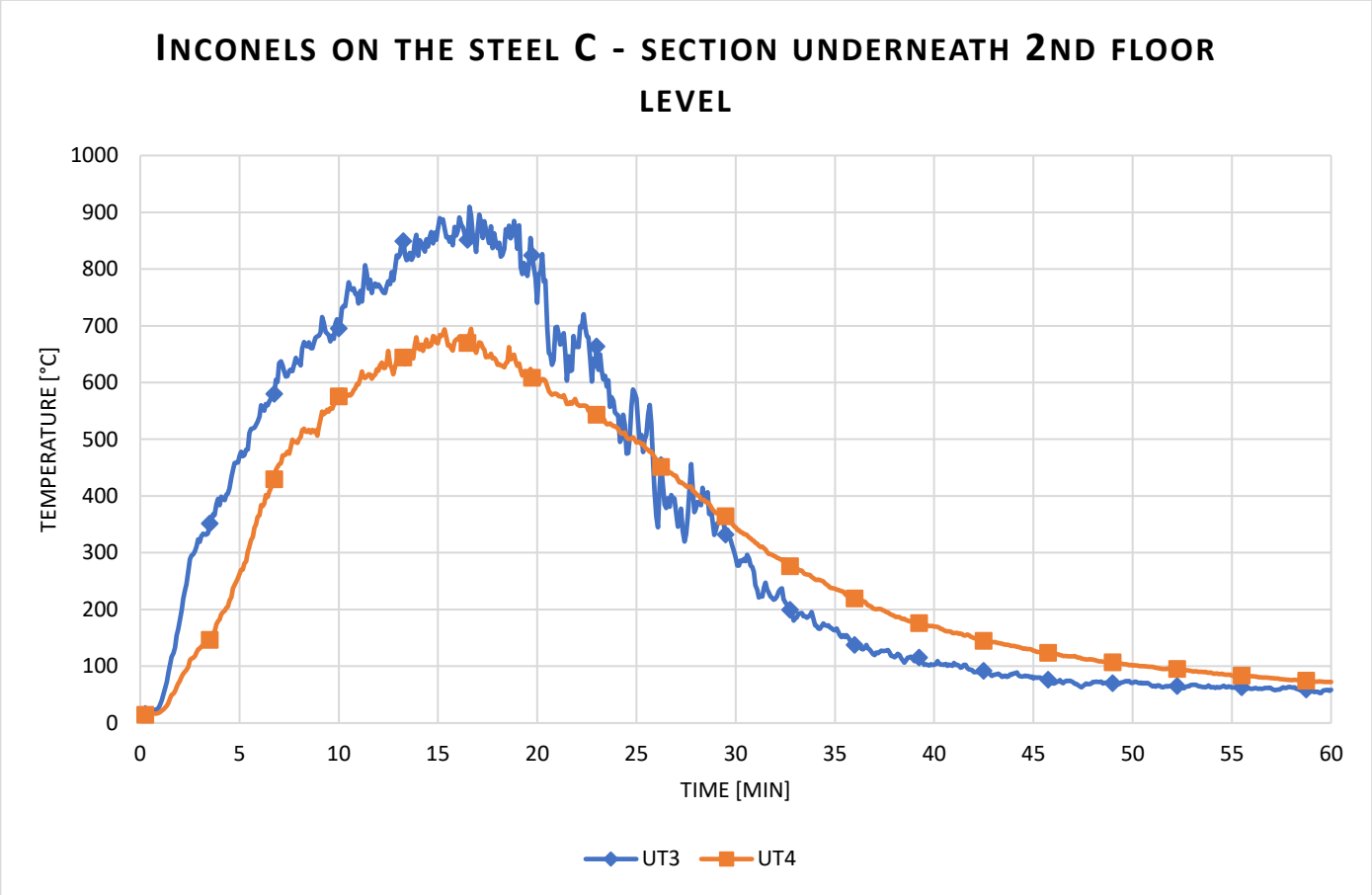

Radiant heat calculated from Plate TC's

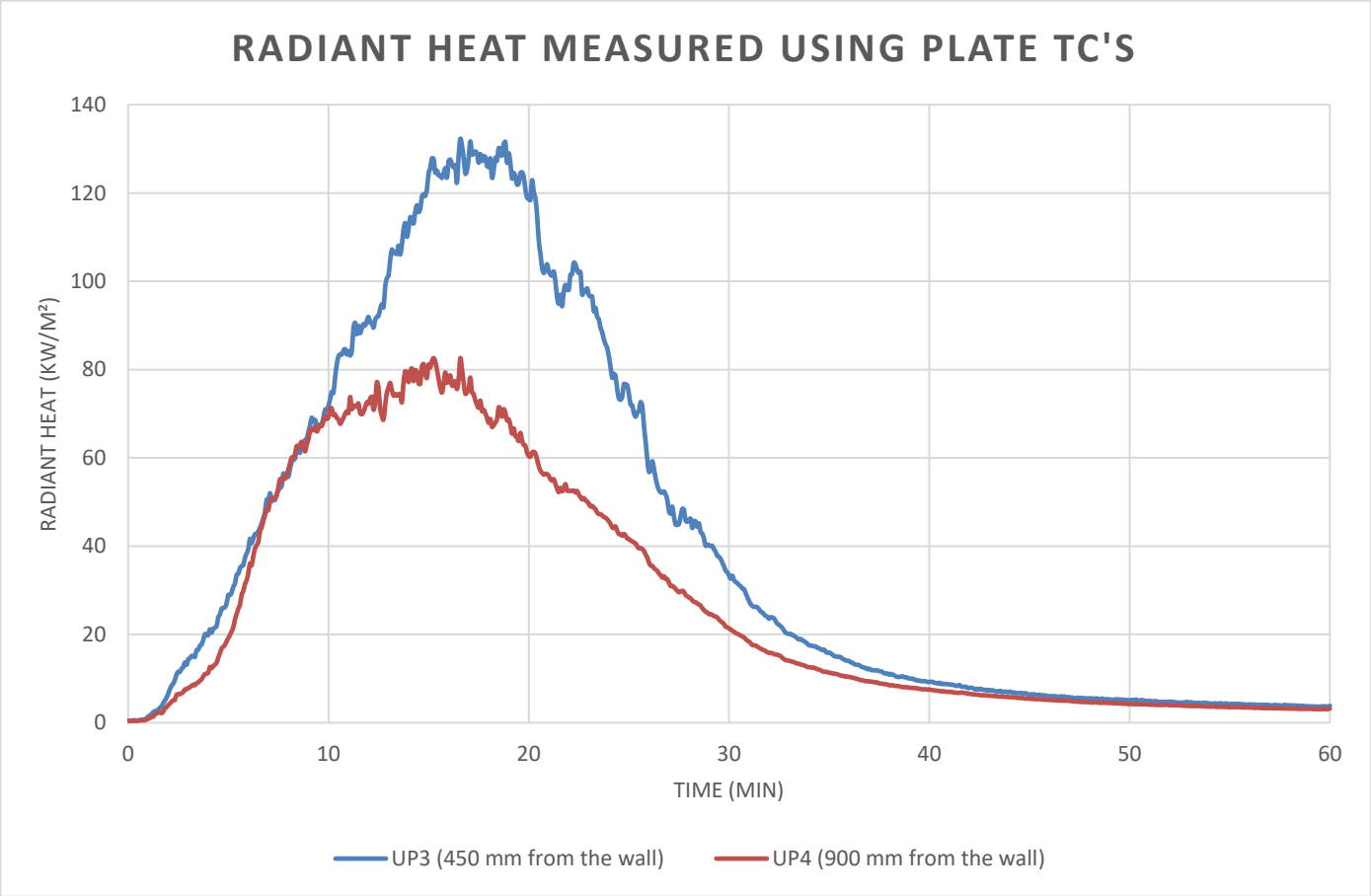

Data measurements from Inconels on side wall

Layout

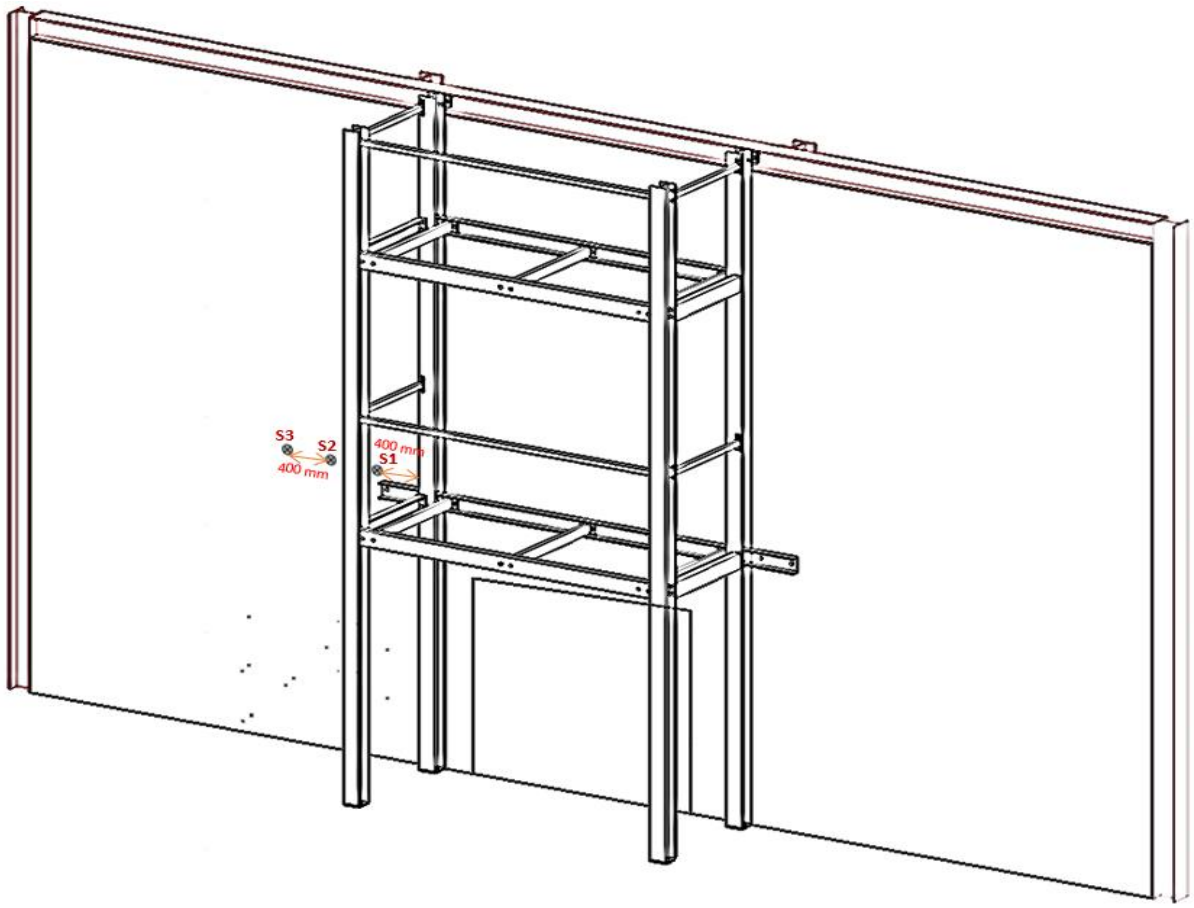

Temperature measured from the Inconels from the side wall – adjacent 1st floor level steel frame

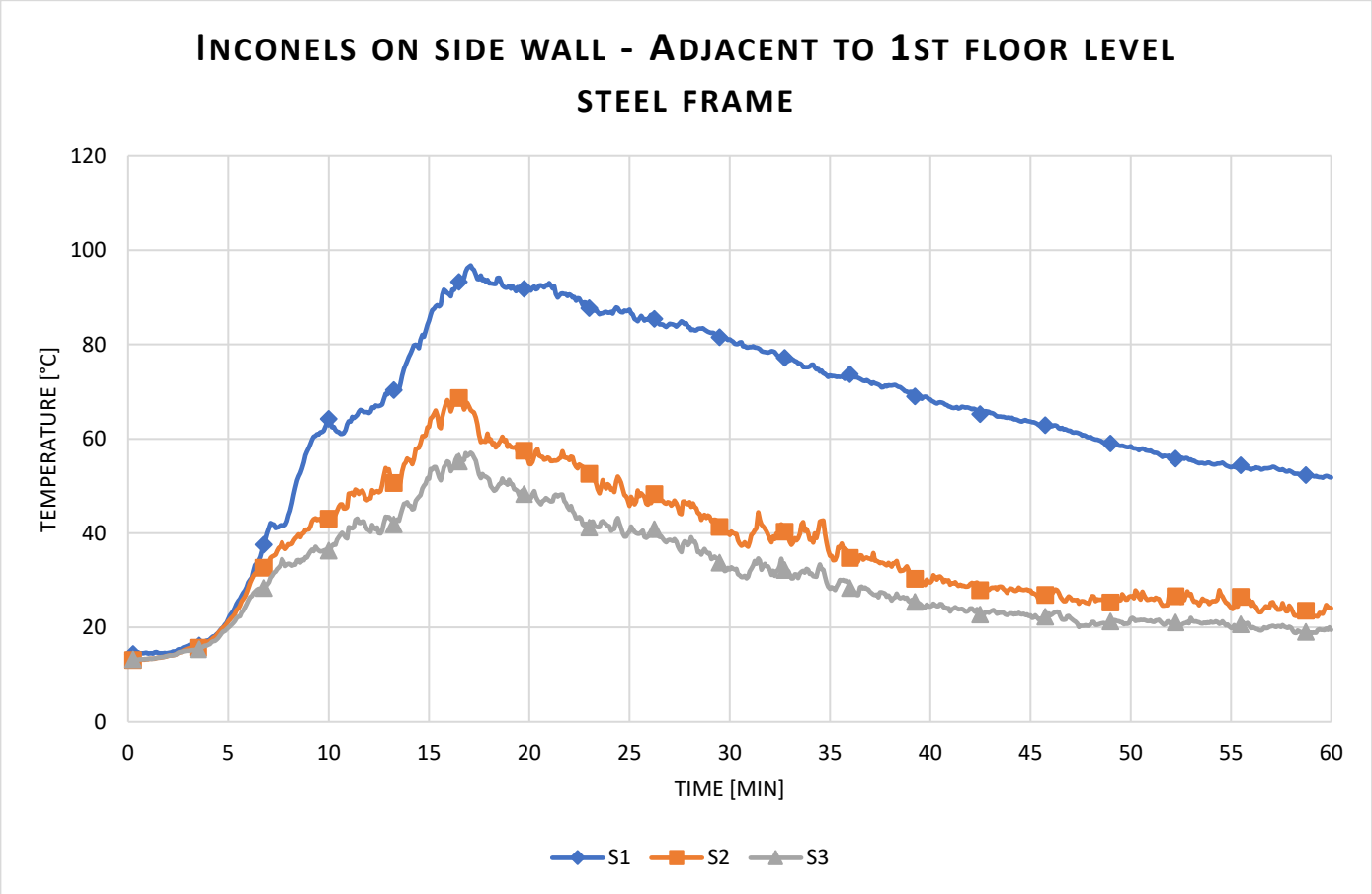

Data measurement from the Inconels on steel C - section

Layout

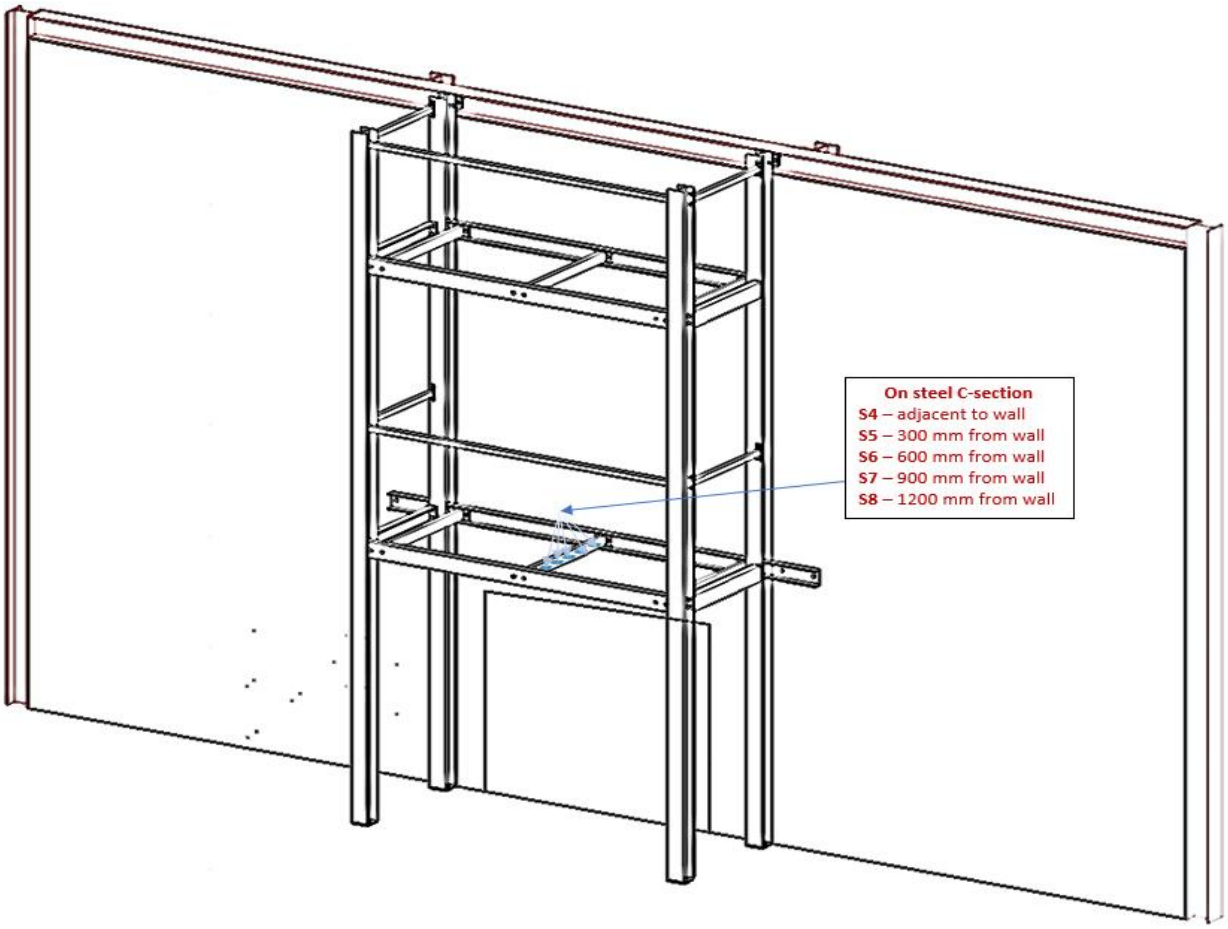

Temperature measured from the Inconels on steel C-section underneath 1st floor

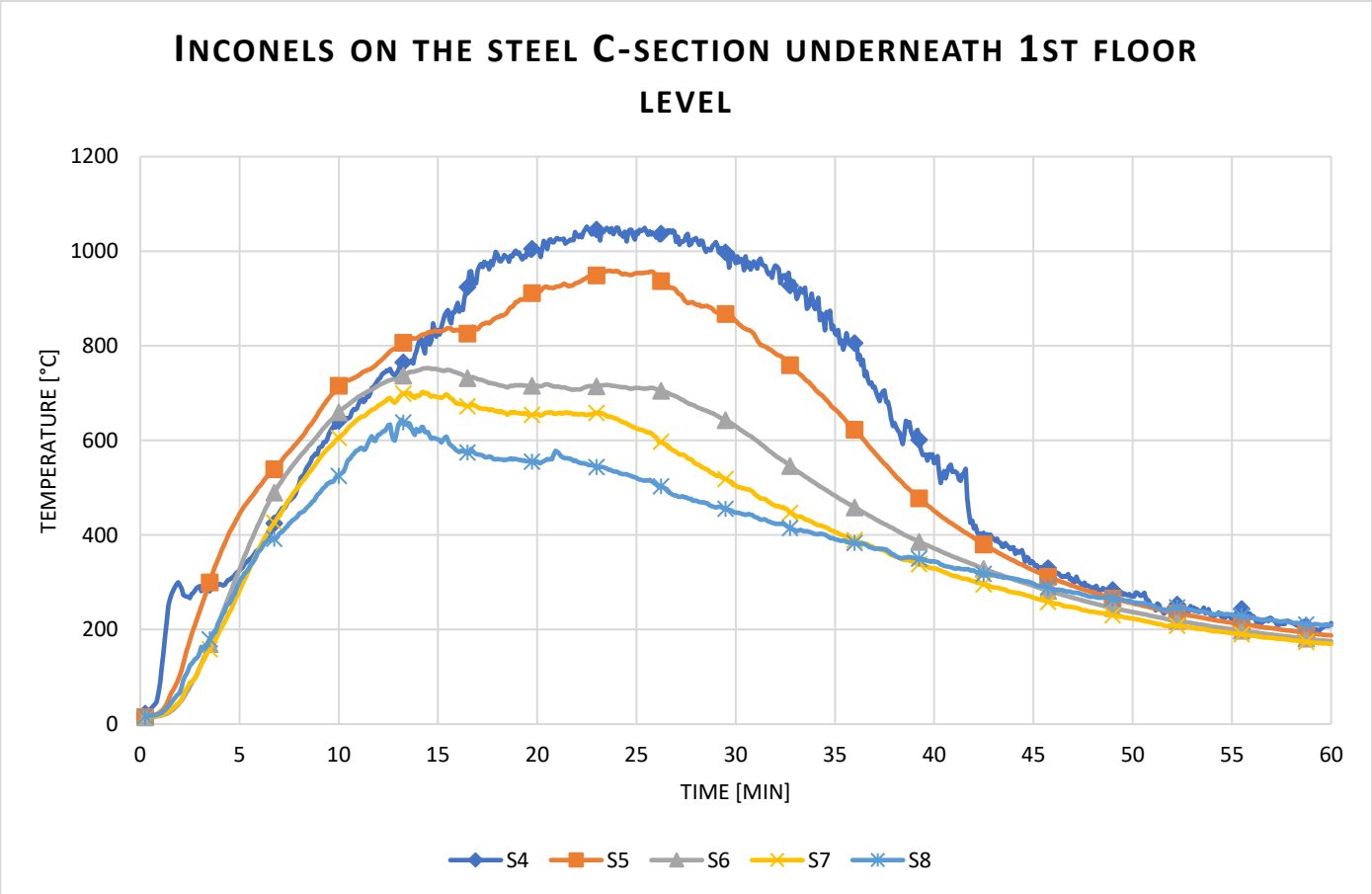

Data measurement from the Inconels facing crib (ground floor)

Layout

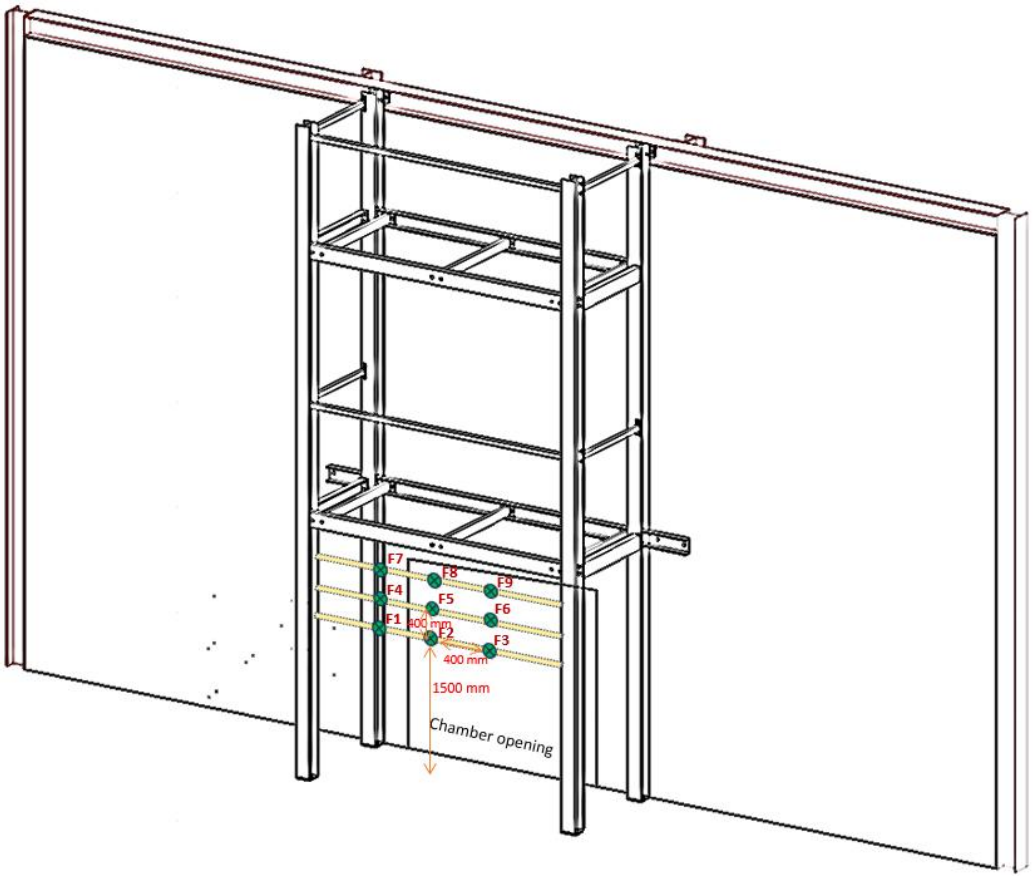

Temperature measured from the Inconels above the handrails facing the crib

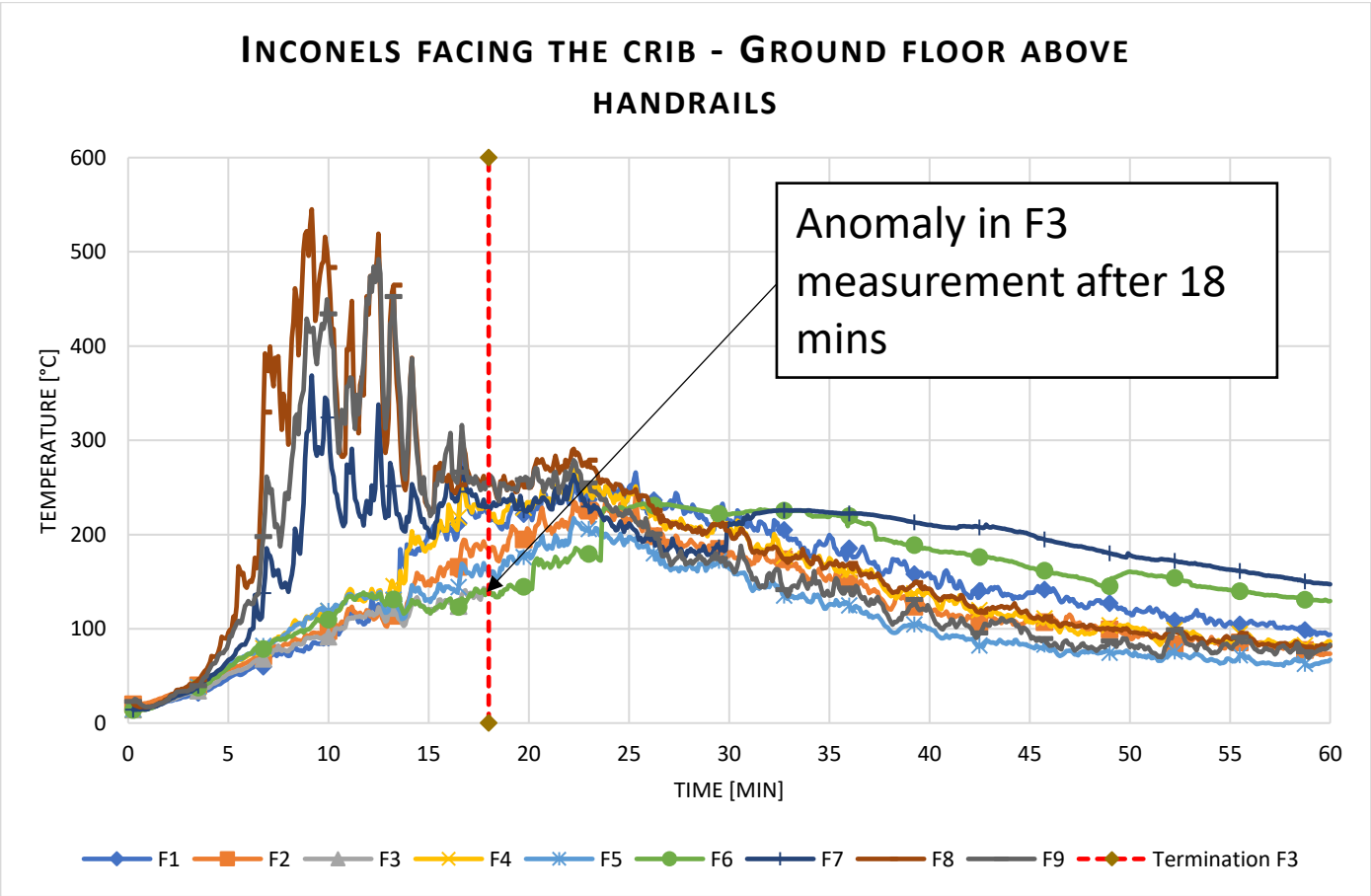

Data measurement from the Inconels on 1st floor

Layout

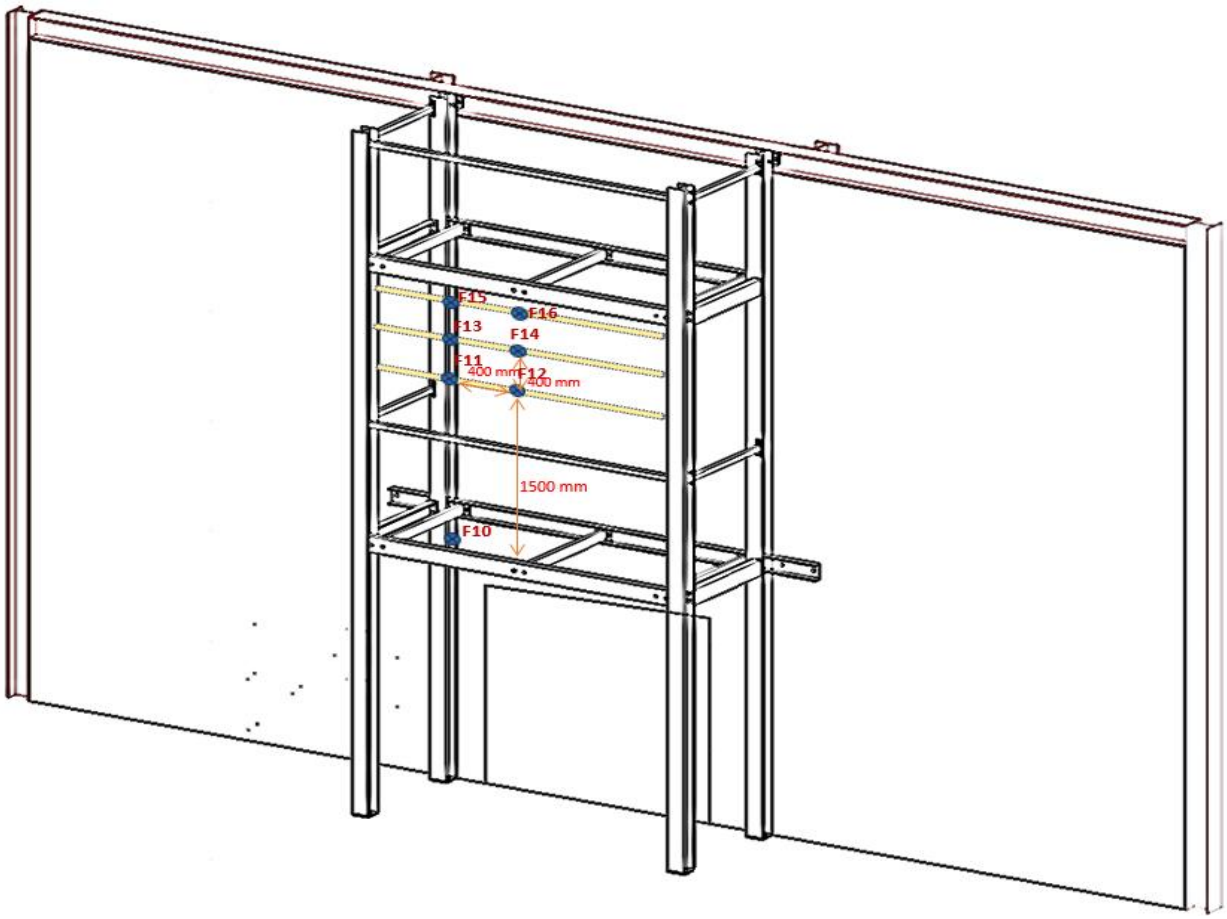

Temperature measured from the Inconels facing outwards on 1st floor on floor and above handrails

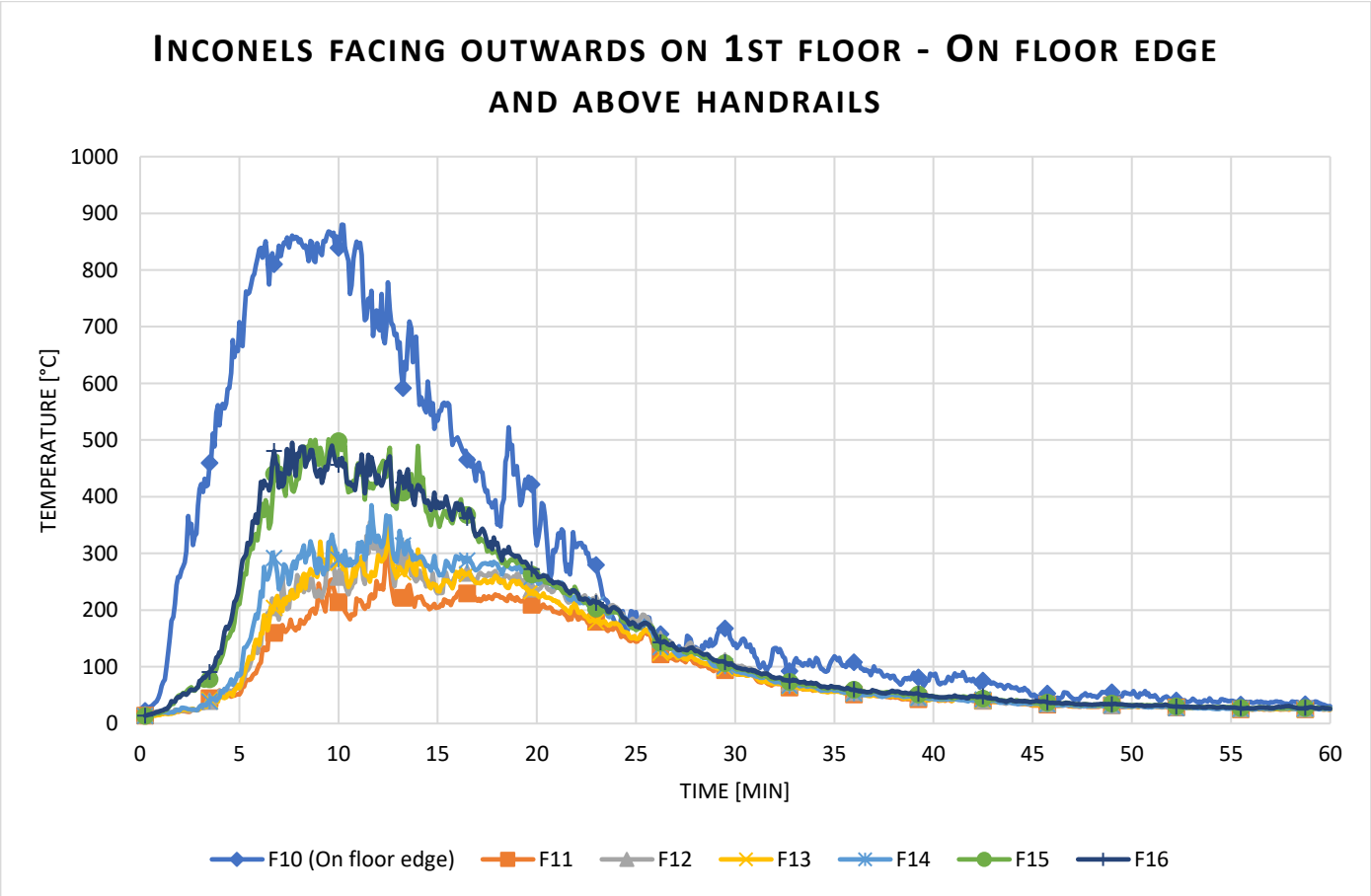

Data measurement from the Inconels on 2nd floor

Layout

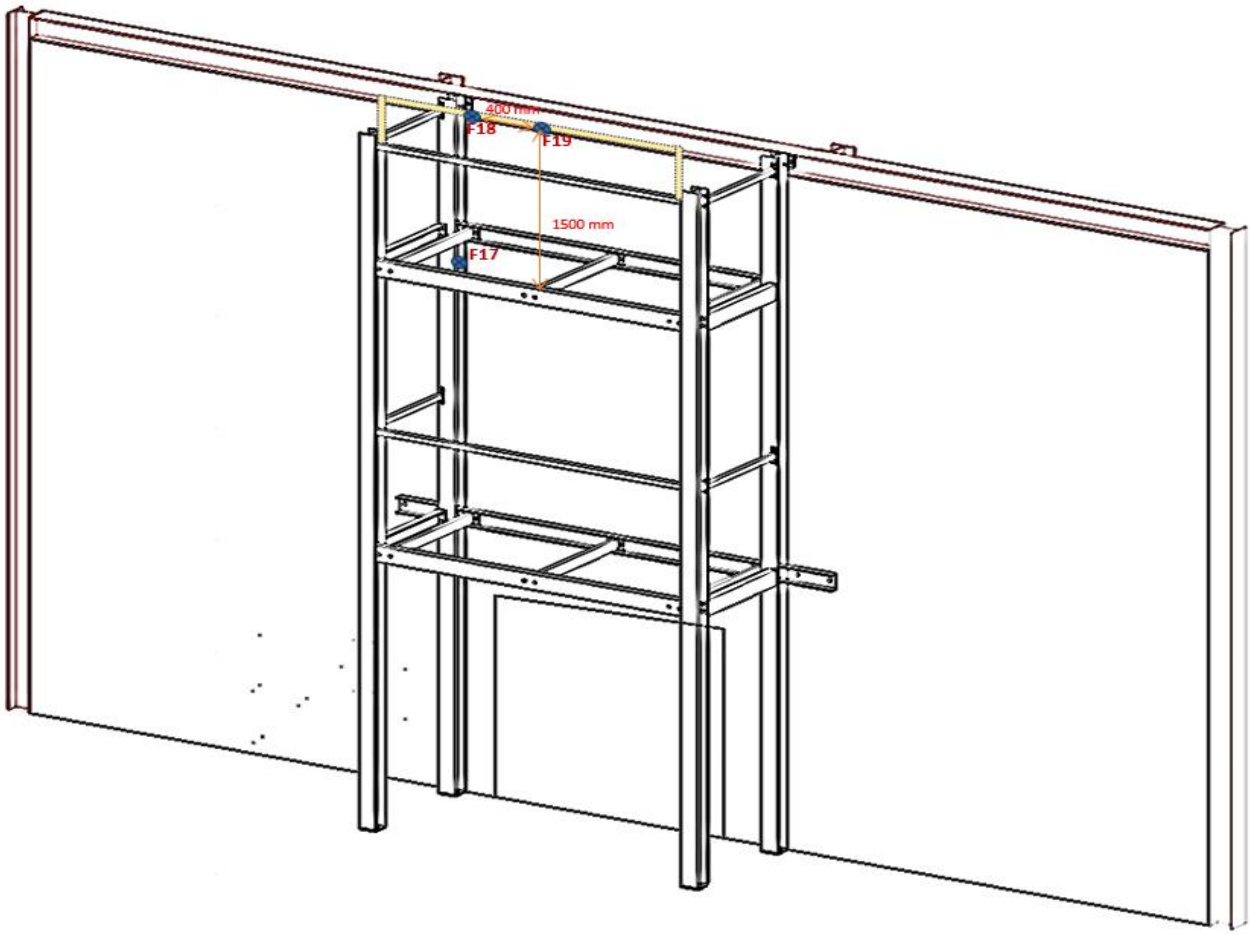

Temperature measured from the Inconels facing outwards on 2nd floor on floor and above handrails

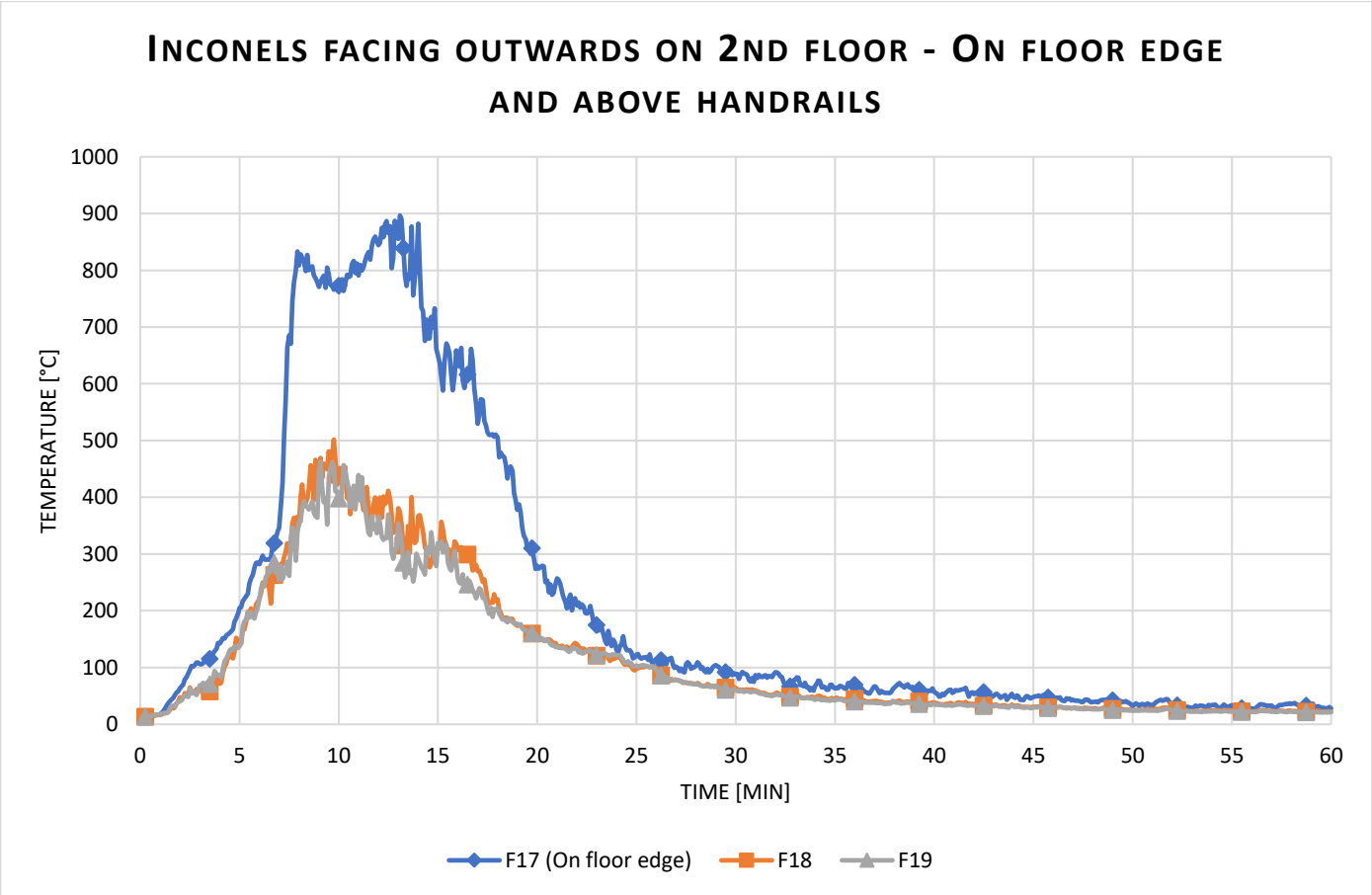

3. PICTURES TAKEN DURING THE TEST

0:04:57

0:07:38

0:14:30

0:24:16

03:01

0:39:43

0:47:56

1:02:50

Test date: 17th of January 2024

Project Nr: EUI-23-000746

Test Nr: EUI-23-CHB-000746D

1. INSTRUMENTATION LAYOUT

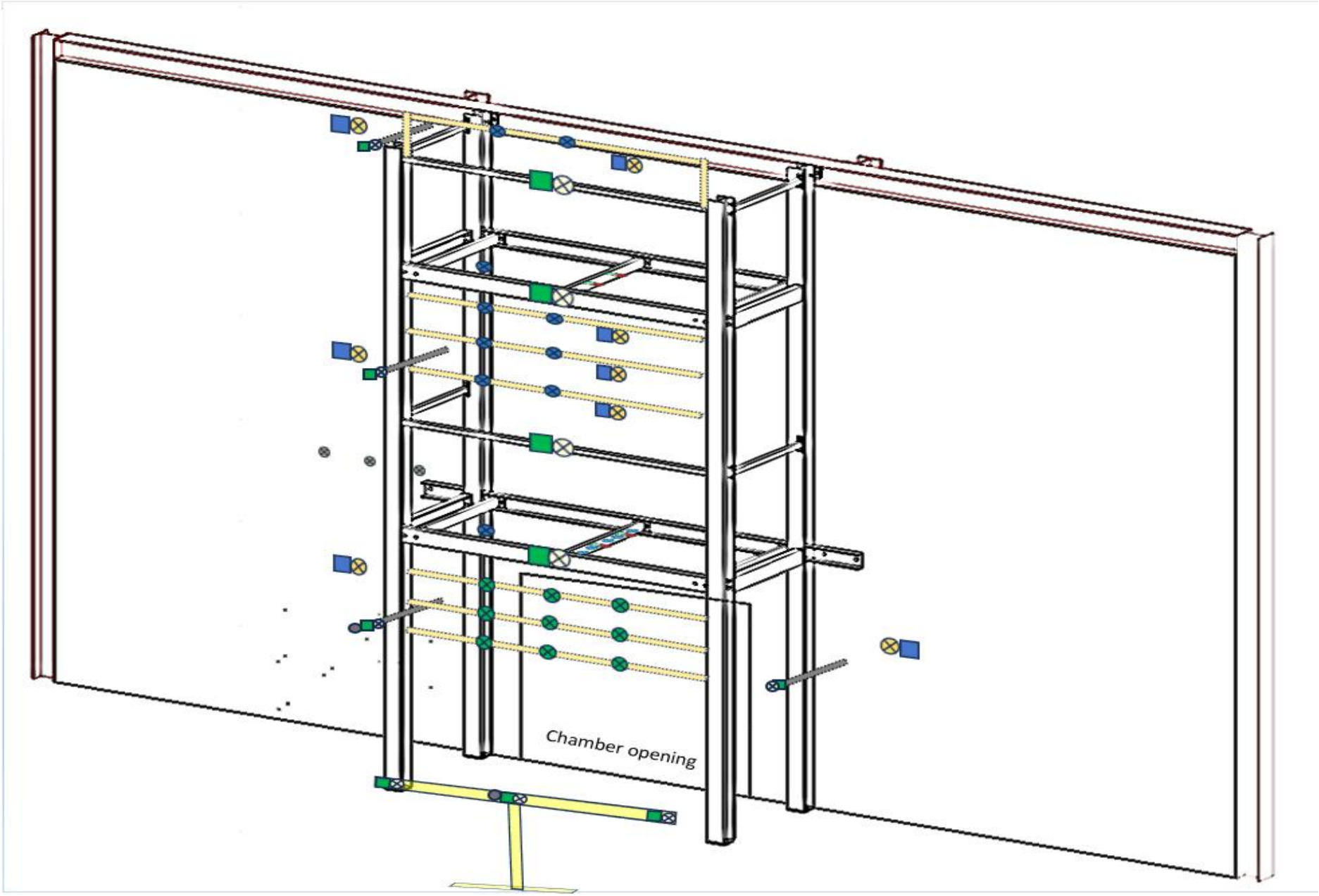

Plate TC on exposed face

Inconel TC on exposed face

Inconel TC on wall

Plate TC on wall

Heat flux meter

2x Plate TC's underside the Balcony floor –
At 450 mm and 900 mm from the wall

2x Inconel TC's underside the Balcony floor –
At 450 mm and 900 mm from the wall

3m long TC facing outwards,
extends out by 50 mm

TC on the steel C-section
S4 – exposed edge of wall
S5 – 300mm away from the wall
S6 – 600mm away from the wall
S7 – 900mm away from the wall
S8 – 1200mm away from the wall

3m long TC facing the crib,
extends out by 50 mm

Nomenclature:

The first word of each acronym is to identify their position:

G - Ground floor

S – Side edge to the chamber opening

M – Middle floor

T – Top floor

F – Front facing Inconels

The second word denotes the instrument:

Fluxmeter (R), Plate TC (P), Inconel (T)

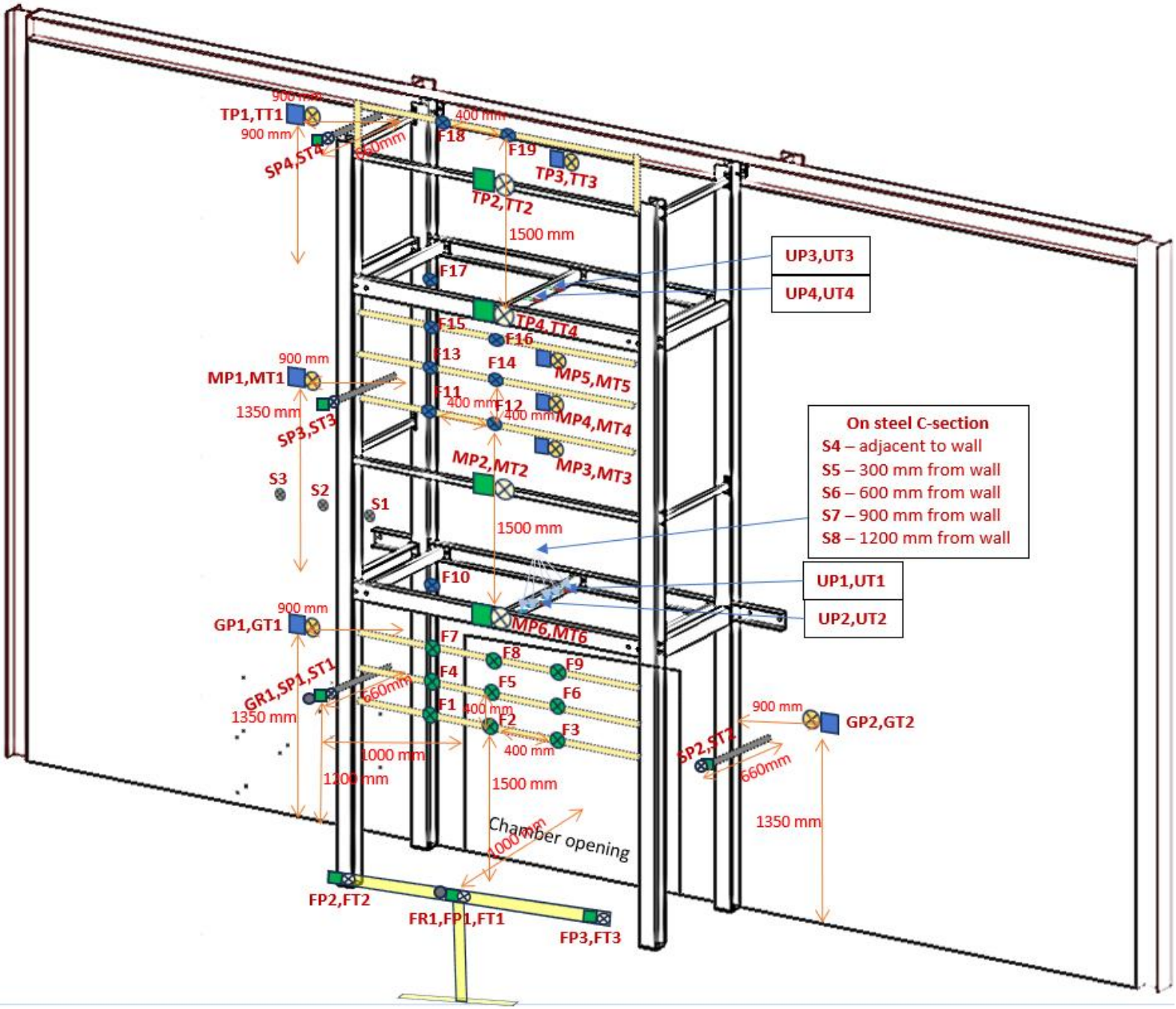
TP1,TT1
900 mm
SP4,ST4
660mm
400 mm
F18
F19
TP3,TT3
TP2,TT2
1500 mm
F17
UP3,UT3
UP4,UT4
TP4,TT4
F15
F16
F13
F14
MP5,MT5
MP1,MT1
F11
F12
MP4,MT4
1350 mm
SP3,ST3
MP3,MT3
MP2,MT2
S3
S2
S1
On steel C-section
S4 – adjacent to wall
S5 – 300 mm from wall
S6 – 600 mm from wall
S7 – 900 mm from wall
S8 – 1200 mm from wall
F10
UP1,UT1
UP2,UT2
GP1,GT1
MP6,MT6
F7
F8
F9
F4
F5
F6
GR1,SP1,ST1
F1
F2
F3
1000 mm
1200 mm
GP2,GT2
SP2,ST2
Chamber opening
1000 mm
FP2,FT2
FR1,FP1,FT1
FP3,FT3

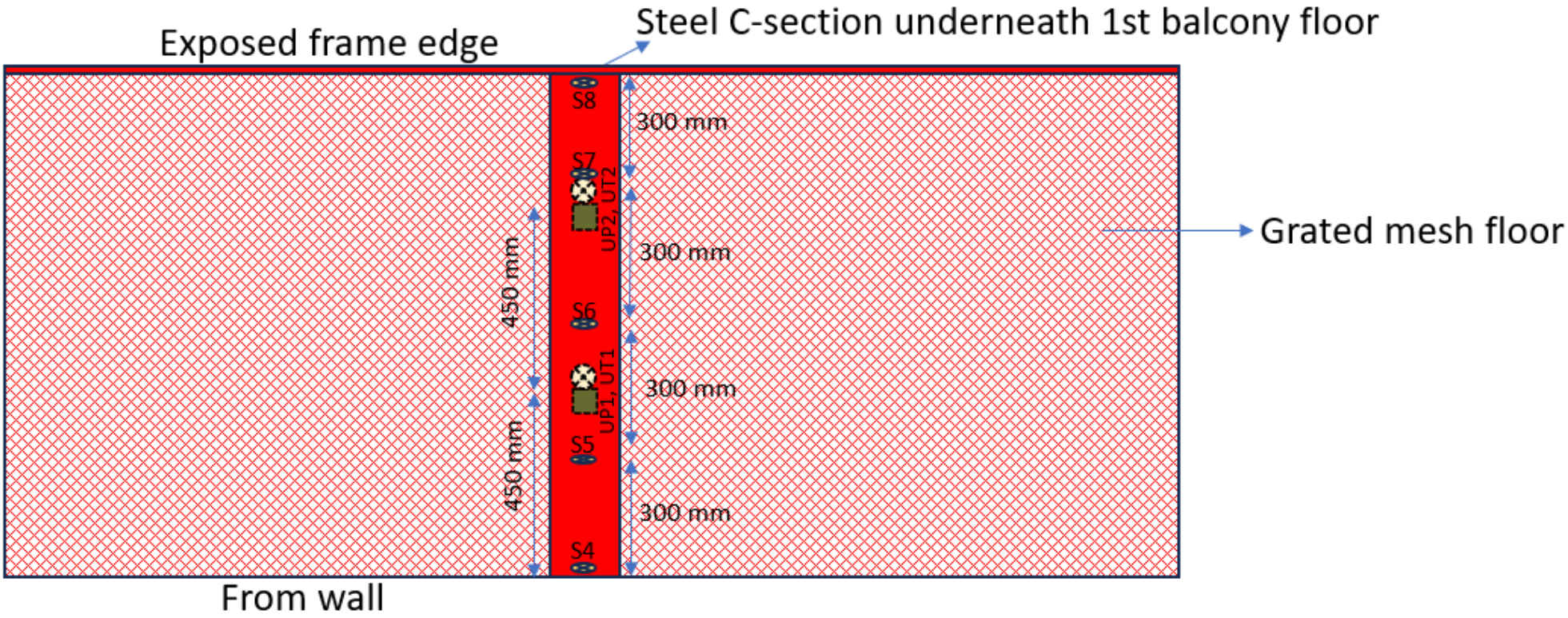

S4 – 10 mm from the wall on Steel C section to measure steel temperature
S5 – 300 mm from the wall on Steel C section to measure steel temperature
S6 – 600 mm from the wall on Steel C section to measure steel temperature
S7 – 900 mm from the wall on Steel C section to measure steel temperature
S8 – 1200 mm from the wall on Steel C section to measure steel temperature

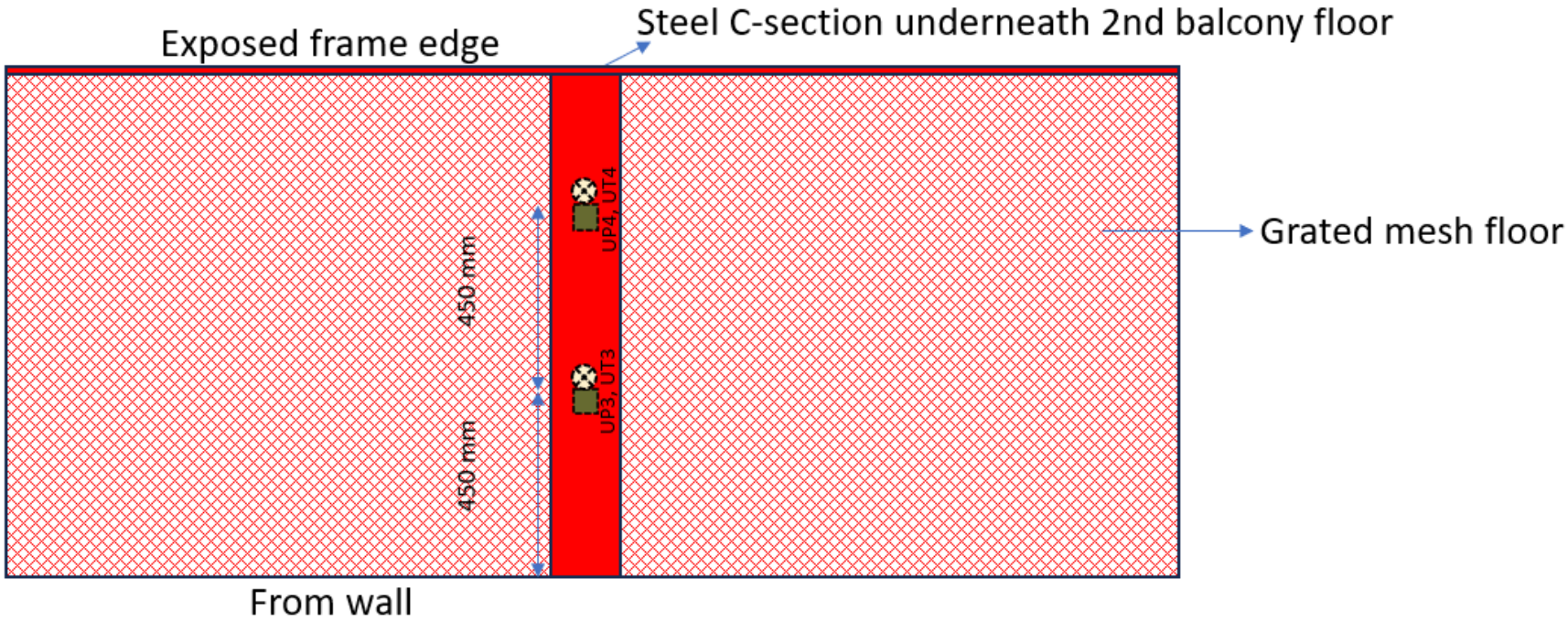
Exposed frame edge
Steel C-section underneath 2nd balcony floor
Grated mesh floor
450 mm
450 mm
UP4, UT4
UP3, UT3
From wall

Figure 1: Elevation view of the system before test.

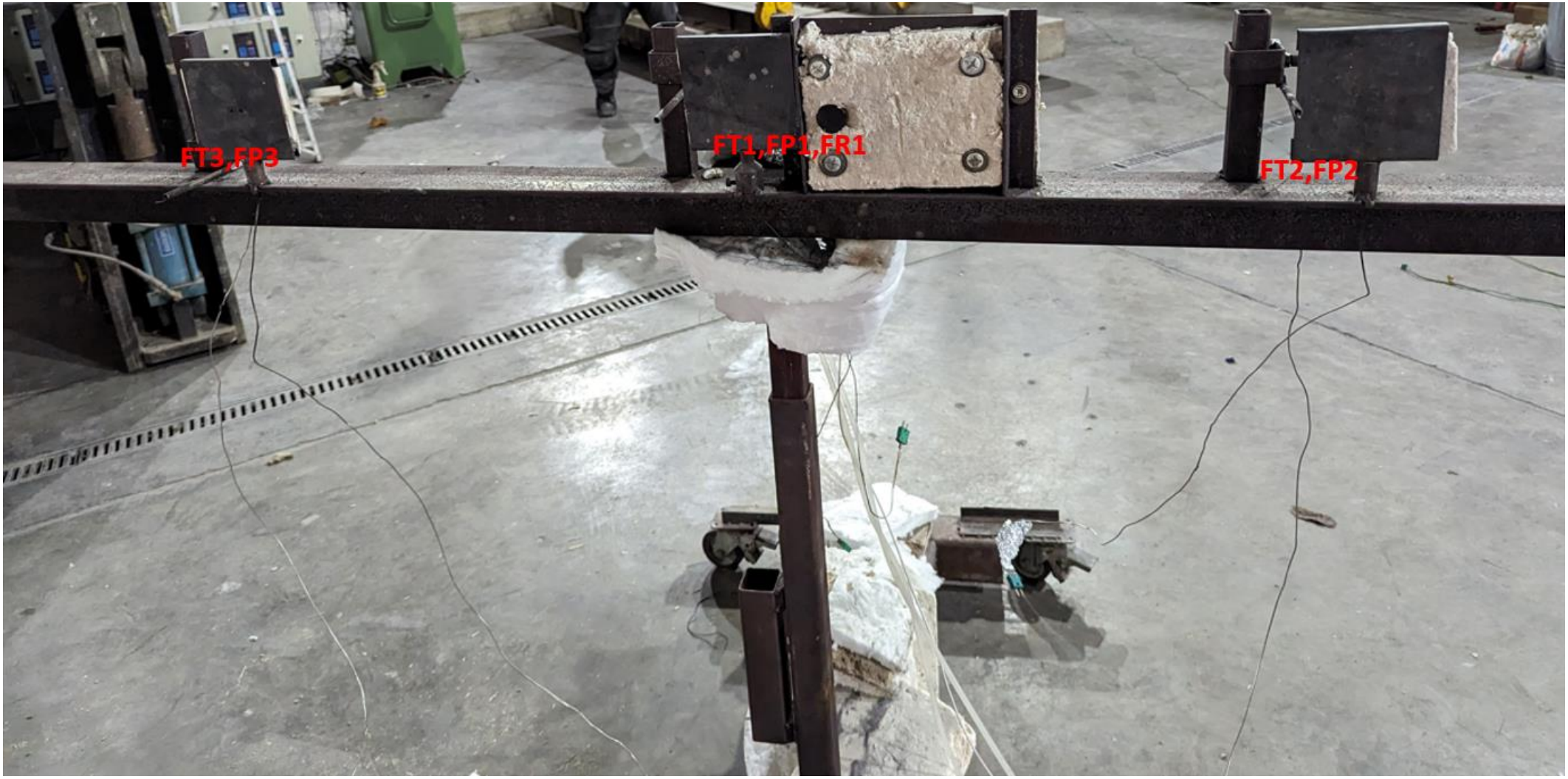

Figure 2: The front facing Fluxmeter, Plate TC's and Inconels (placed 1m away from the target crib hypothetical position).

2. VISUAL OBSERVATIONS DURING THE TEST

Time from ignition (min:sec)	*Observation*
00:00	**Ignition of crib**
00:45	Flames out of combustion chamber
01:25	Flames start to impinge on laminated glass at 1st floor level on front face. Formation of water droplets (Delamination) in the laminated glass panels.
02:22	Flames reach 1st floor level handrail.
06:45	Flame noticed on the bottom section of the laminated glass installed at 1st floor front face.
08:30	Smoke starts to emerge from the aforementioned glass panels.
09:39	Flames noticed on the top section of the glass installed at the aforementioned location.
10:30	Smoke emerging from the laminated glass installed at ground floor on front face was noticed.
11:30	Delamination of ground floor laminated glass on front face.
13:05	The bottom section of the laminated glass installed on either side of the balcony at the first-floor level is experiencing delamination.
14:20	Glasses at 1st floor front face start to deform due to excessive melting.
16:04	Delamination of glasses on either side on Ground floor noticed.
20:44	Flames noticed on the top edge of front facing glasses installed at ground floor.
22:50	Breakage of right-side glass on front face at 1st floor level noticed.
23:43	Glass collapsed from the aforementioned location. Flaming droplets noticed from the collapsed glass.
26:10	Wood crib start to collapse.
27:40	Collapsing of left side glass on front face at 1st floor level noticed. The 1st floor balcony is now exposed.
28:45	Bottom edges and side edges of the ground floor front facing glasses on flames.
30:17	Pool fire noticed
31:30	Flaming droplet. Breakage of front facing glass on Ground floor
32:08	Collapse of bottom right glass at ground floor front face noticed.
33:23	Side glass at ground floor right side on flames.
34:50	Collapse of bottom left glass at ground floor front face noticed.
36:41	All left over glass hanging from the 1st floor front face collapsed.
38:50	Continuous pool fire from the glass melt.
39:48	Right side glass at 1st floor starts to collapse.
40:35	Left side glass at ground floor starts to collapse.
43:35	Right side glass at 1st floor collapsed completely.
43:45	Right side glass at ground floor collapsed completely.
50:00	Nothing New To Report (NNTR).
55:00	NNTR.
60:00	**Termination of the test.**

3. DATA RESULTS

Heat Release rate (Hood)

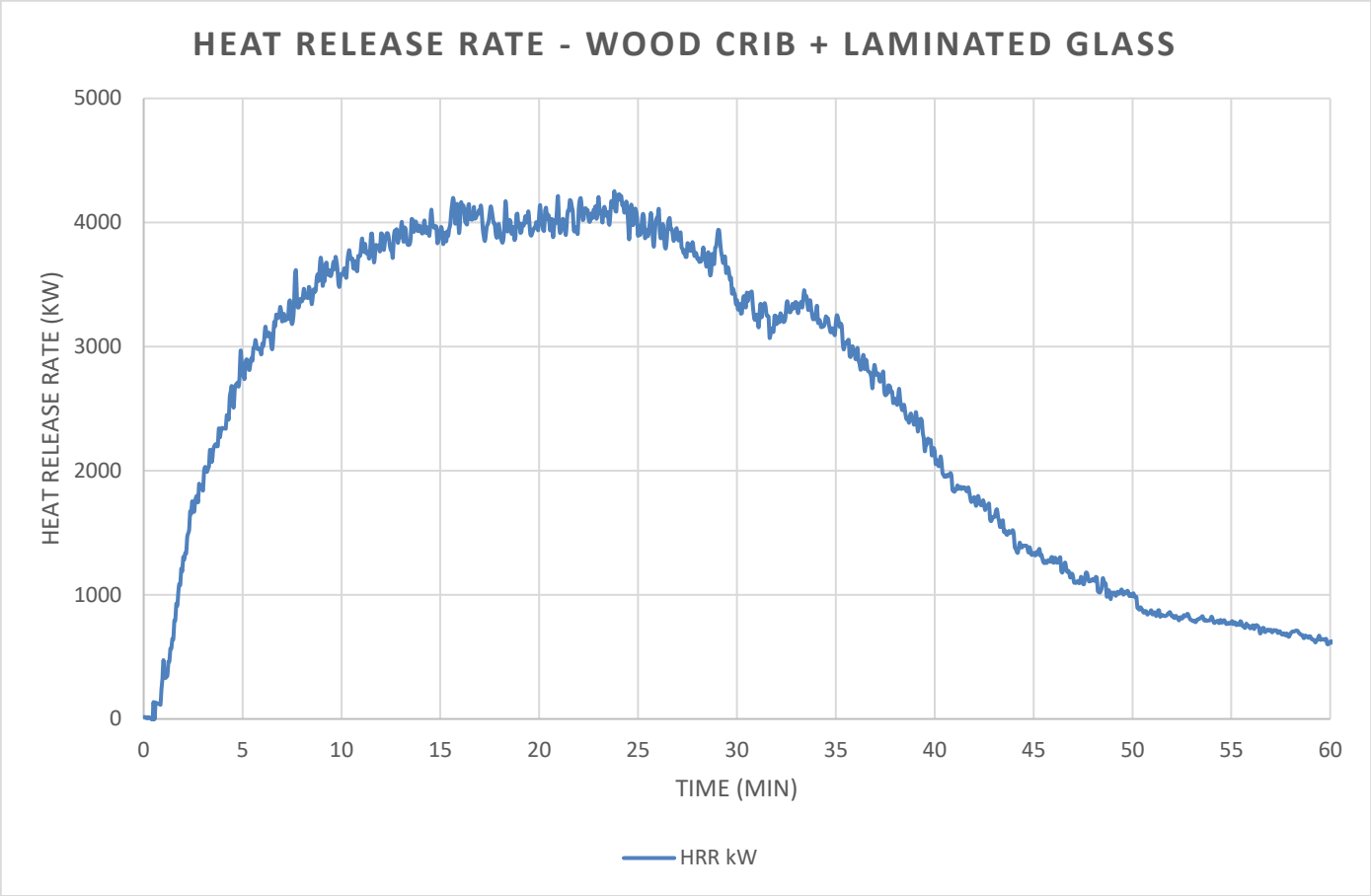

Mass loss

No Mass loss was recorded during this test.

Data measurement at 1m from target crib

Layout

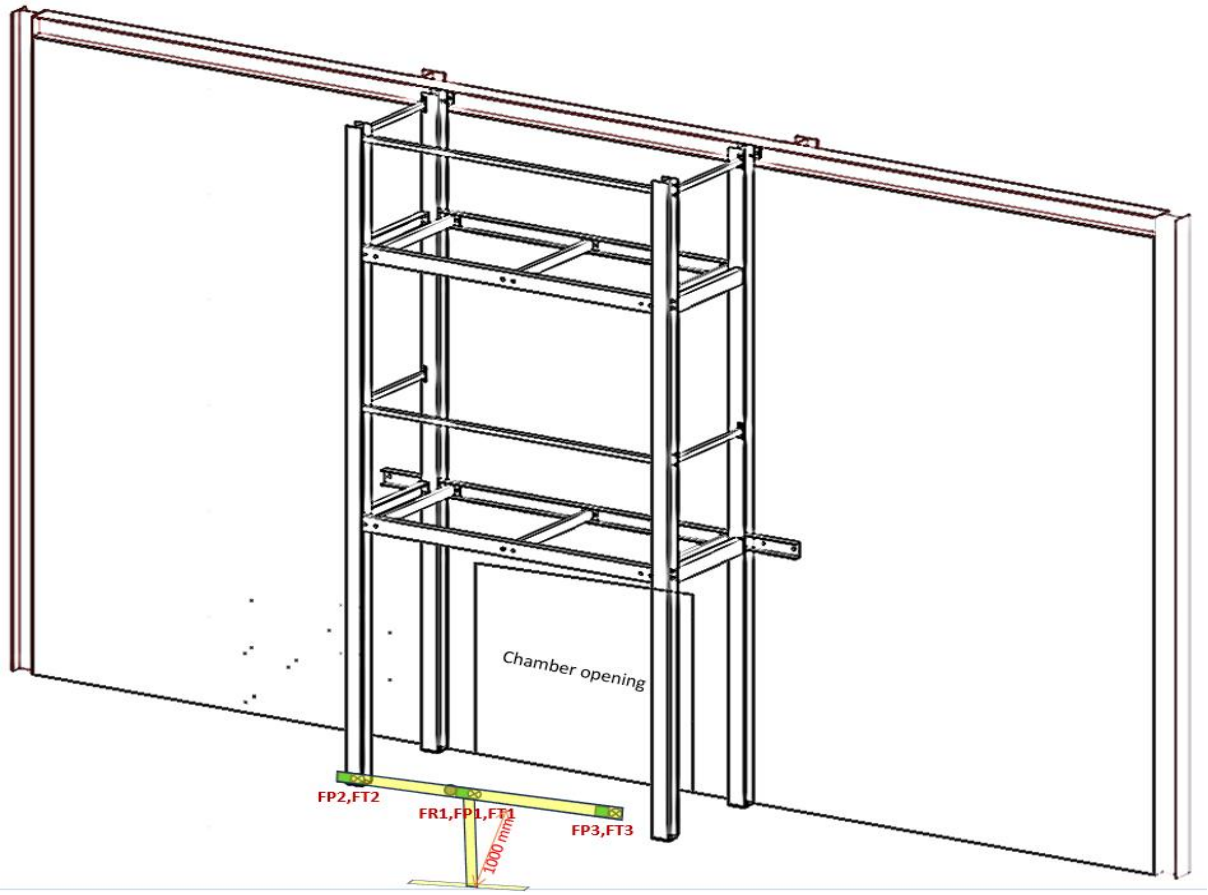

Radiant heat at 1m from target crib

The radiant heat was measured using a water cooled Gardon Guage sensor of range 100 kW/m²:

The heat flux meter was located at 1000 mm from the target crib hypothetical position at mid-height of the wood crib.

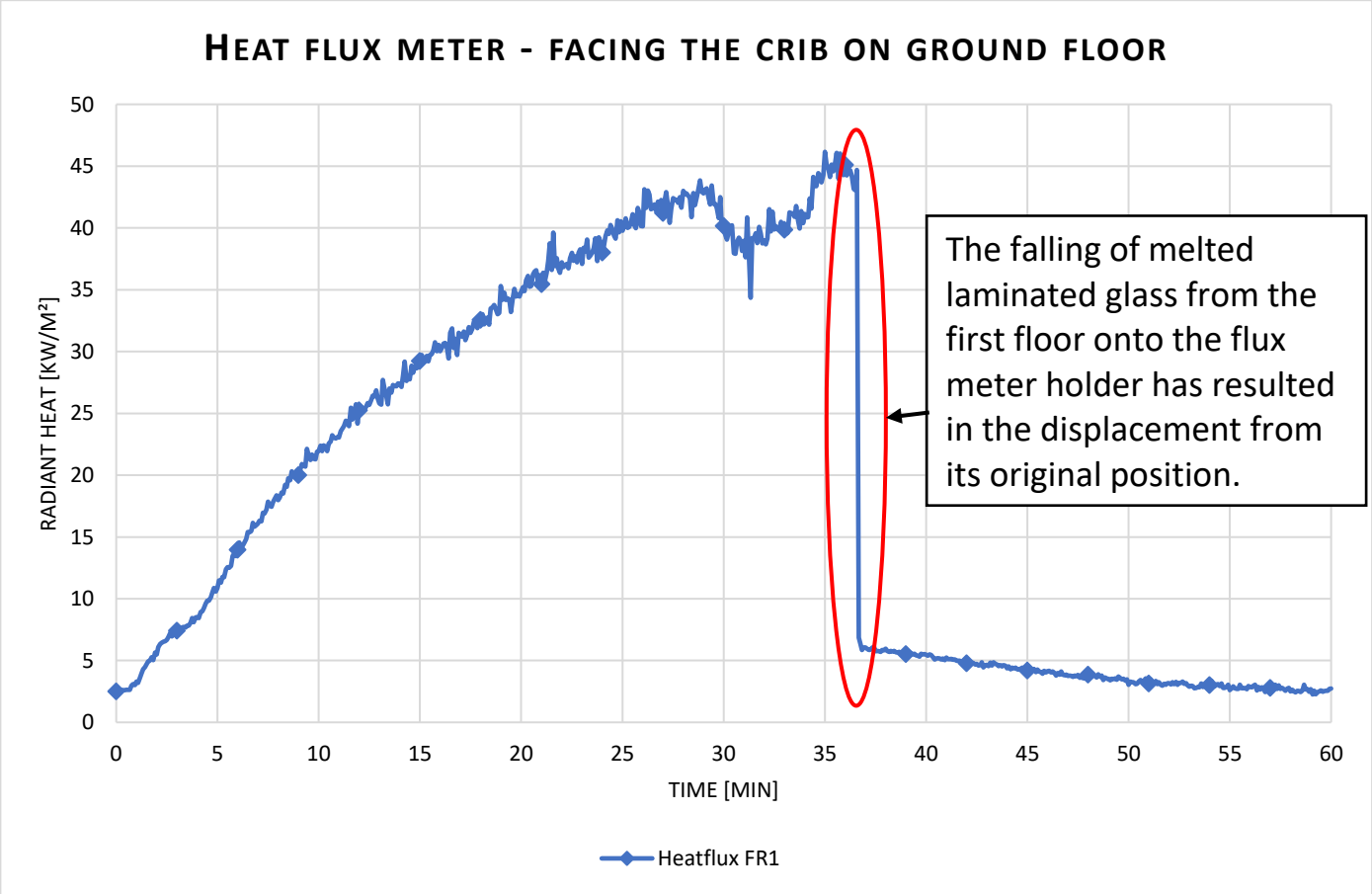

Temperature measured by plate TC's at 1m away from target crib

Ø 1.5 mm mineral insulated thermocouples were placed 1m from the target crib at mid height of wood crib spaced by 500 mm from the centre point ofthe crib. The installation included 3x Inconel thermocouple and 3x plate thermocouples.

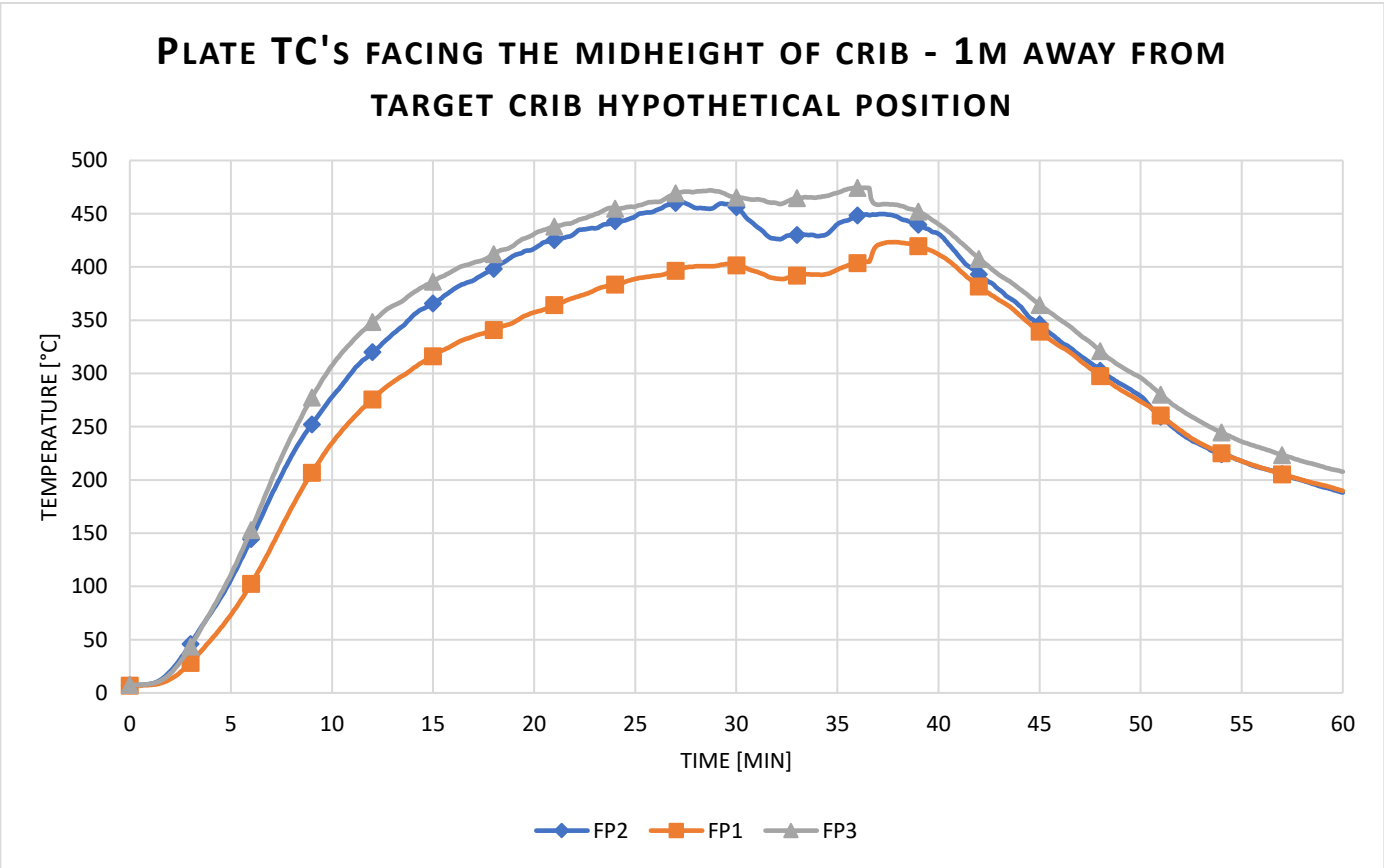

Temperature measured by Inconels at 1m away from crib

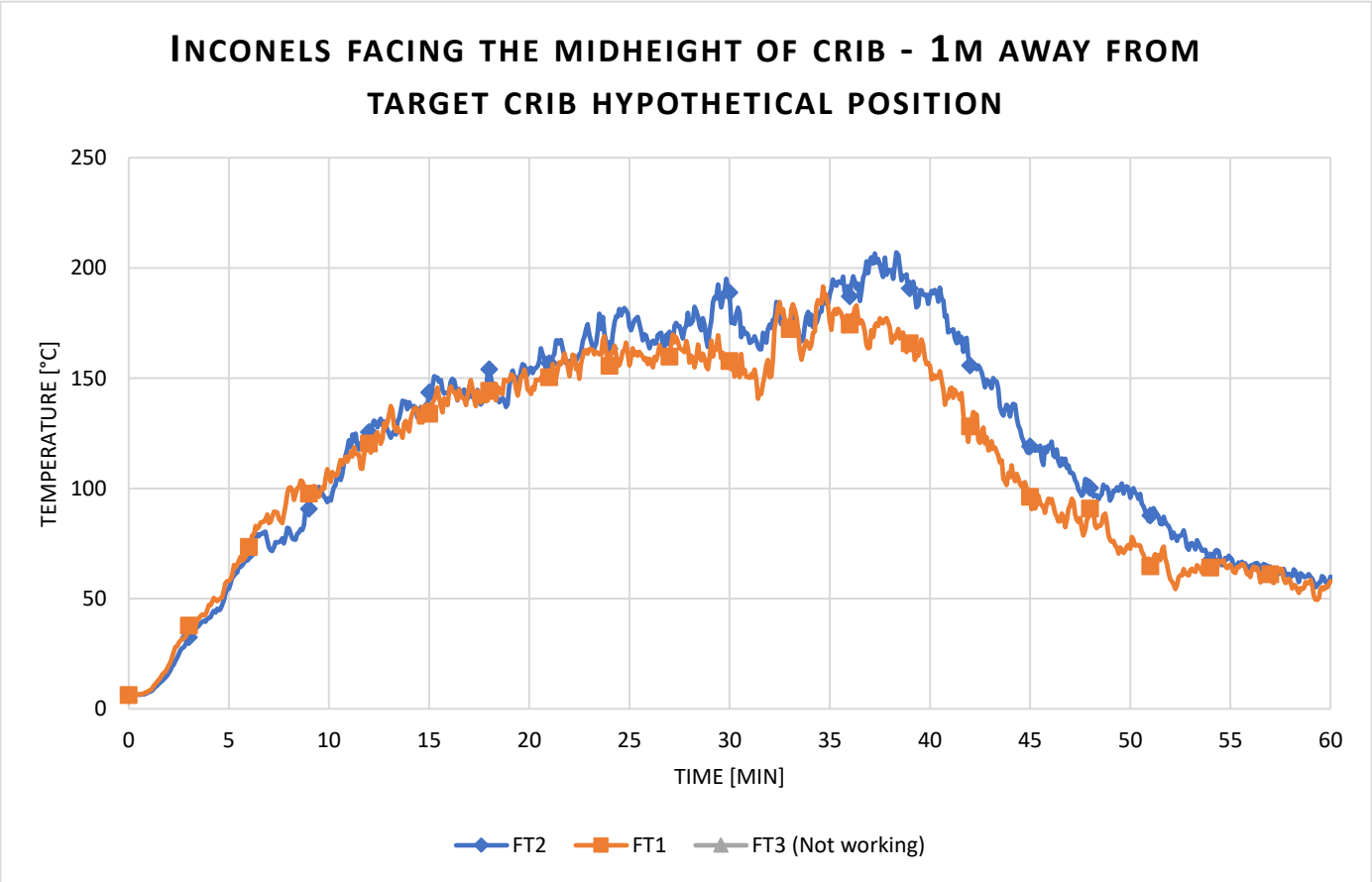

Radiant heat calculated from Plate TC

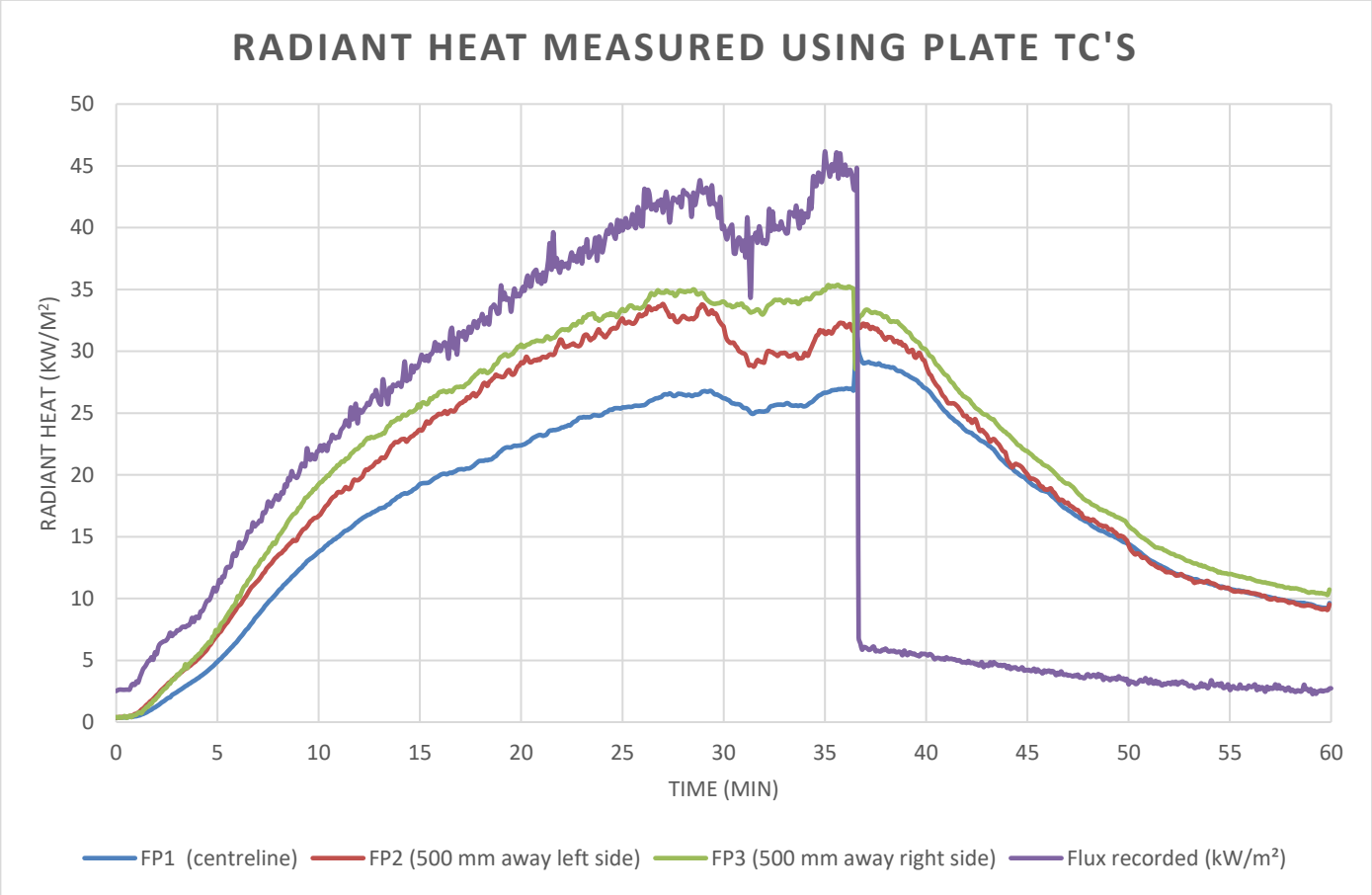

Data measurement from side edges on Ground Floor (660 mm from wall).

Layout

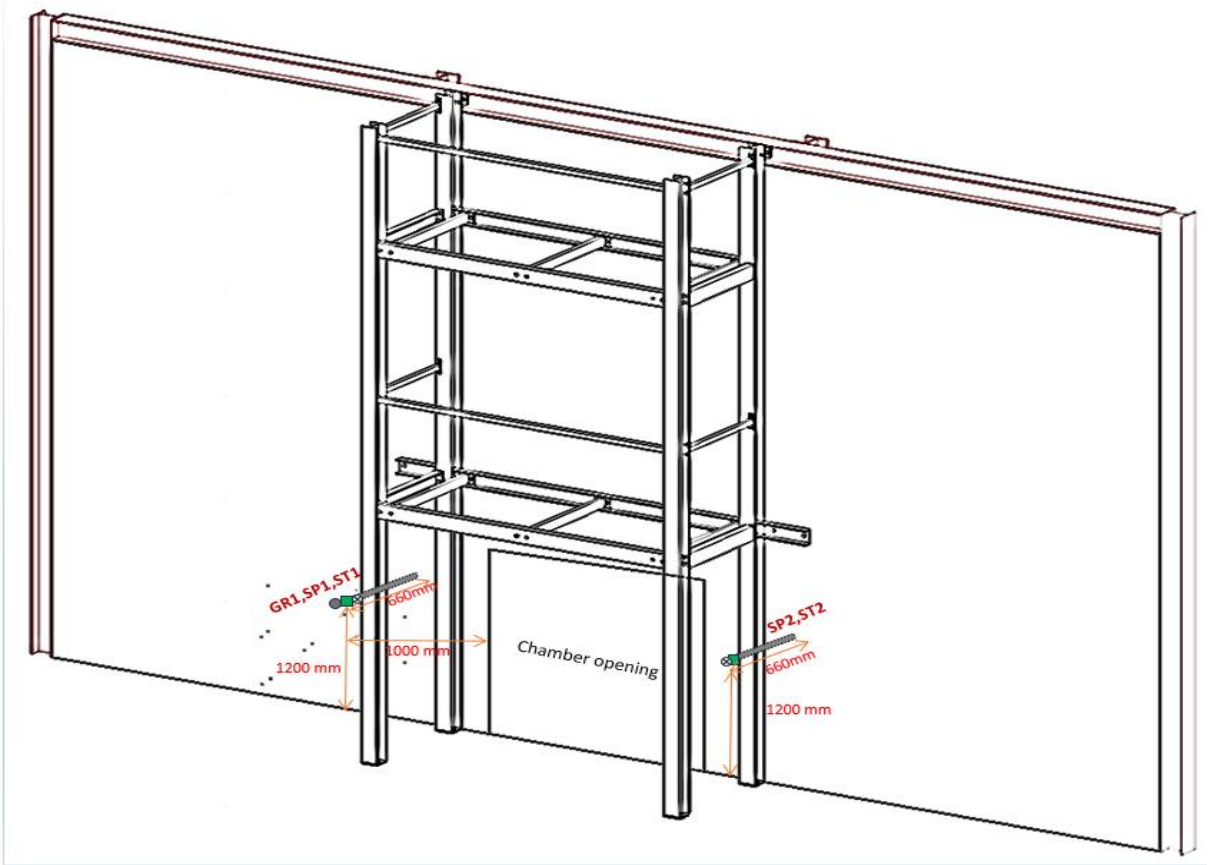

Radiant heat from the flux meter on side edge (660 mm from wall)

The radiant heat was measured using a water cooled Gardon Guage sensor of range 100 kW/m²:

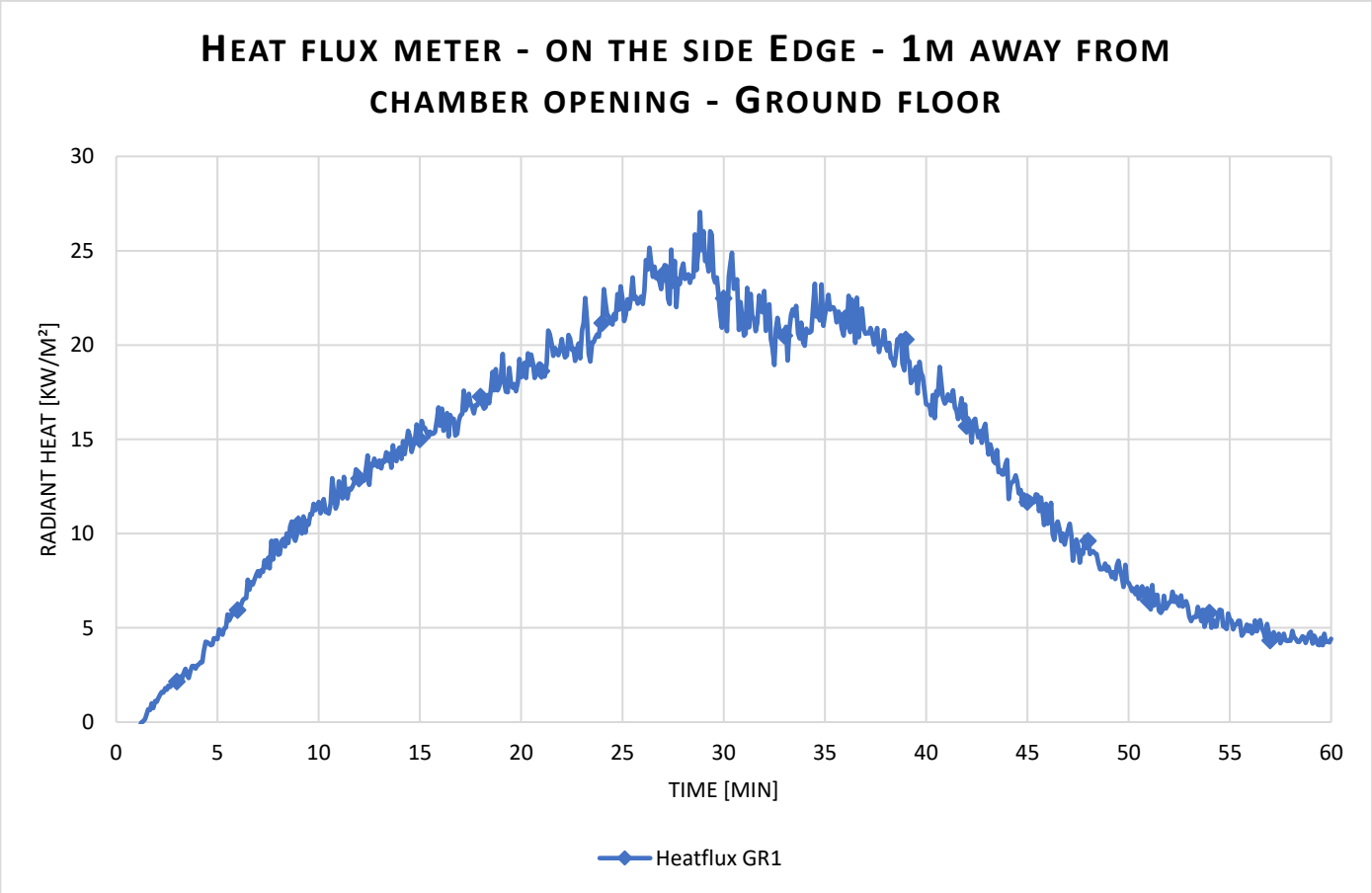

Temperature measured using plate TC's on the side edge

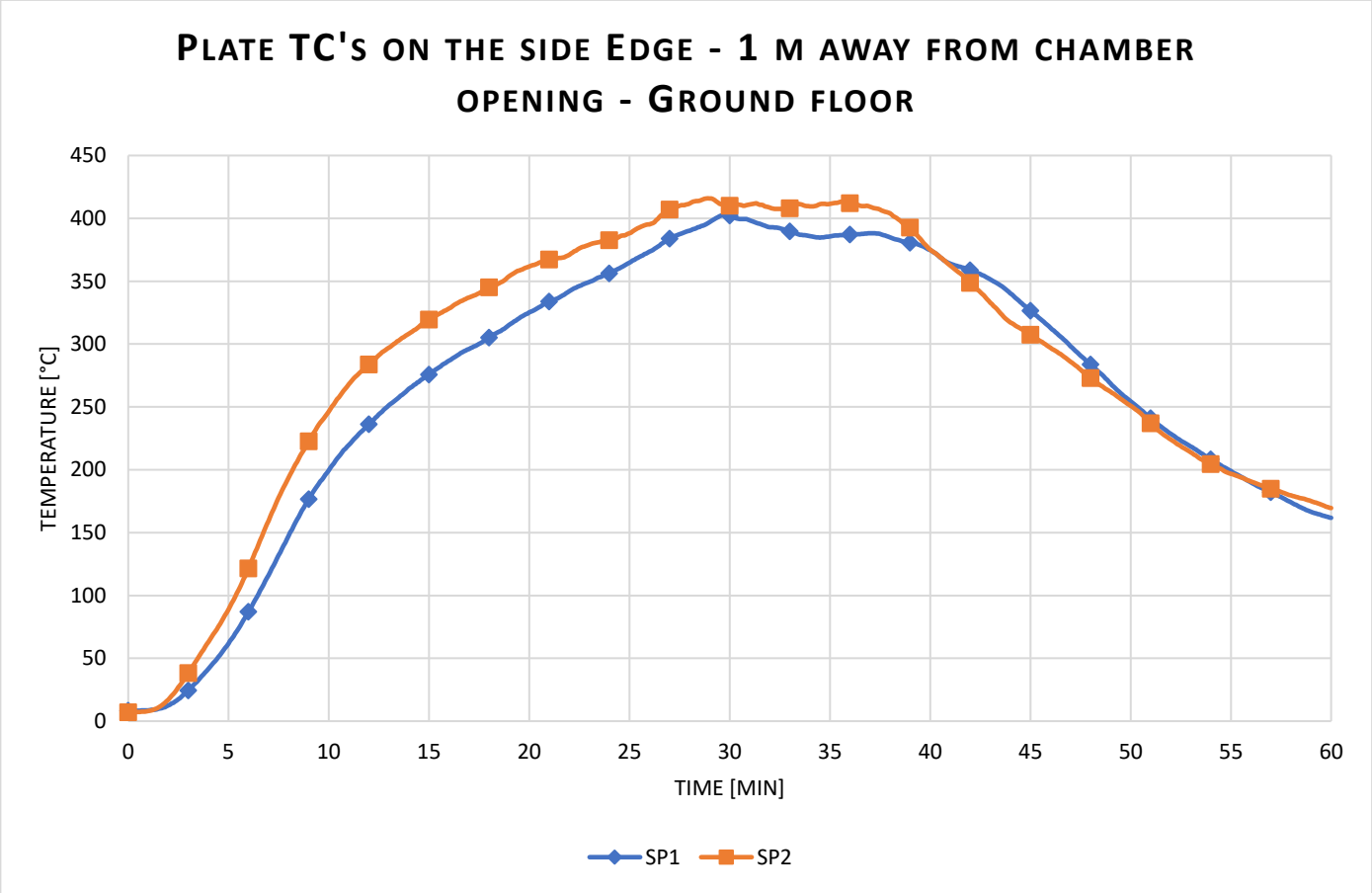

Temperature measured using Inconels on the side edge

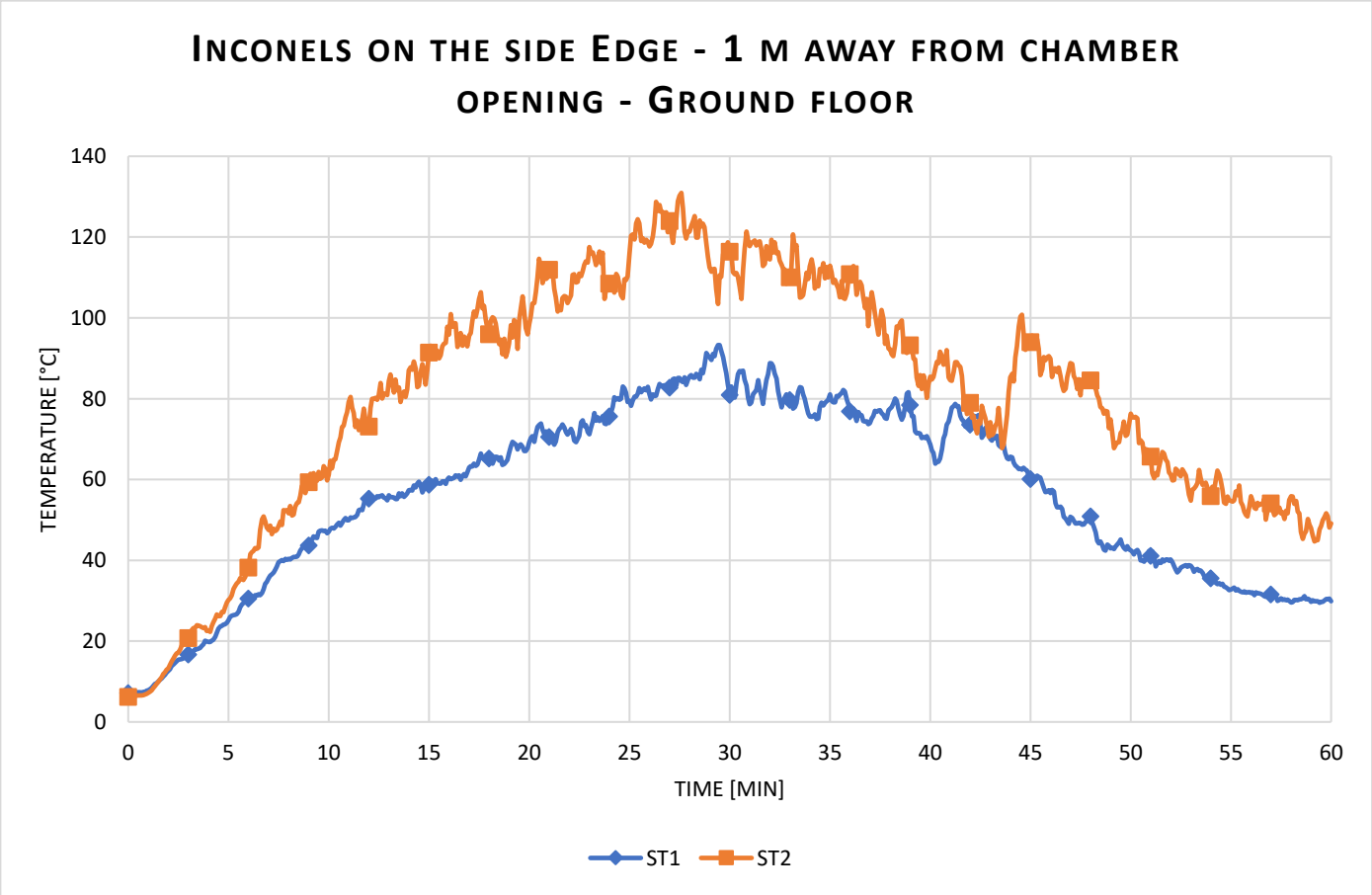

Radiant heat calculated from Plate TC

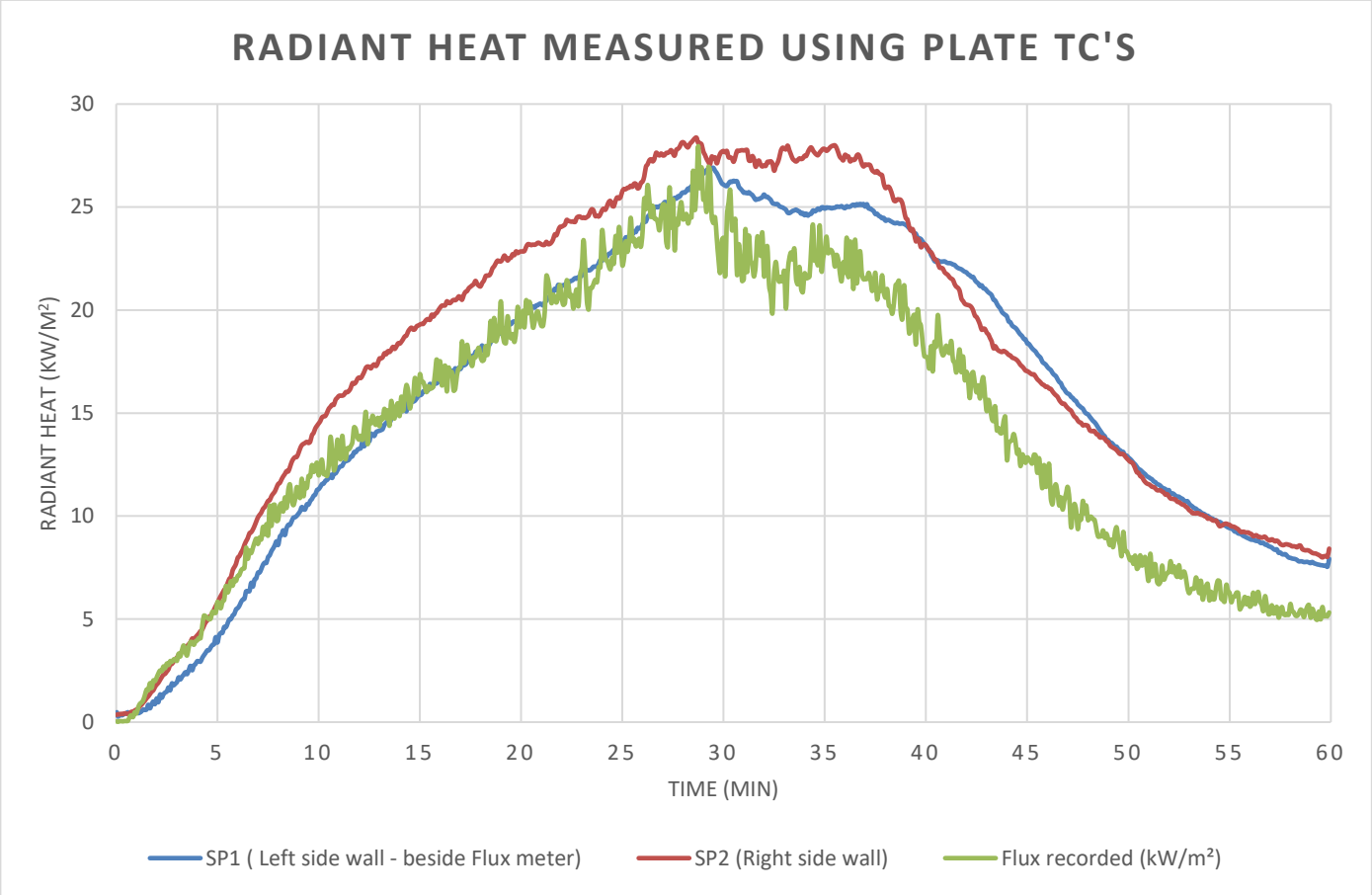

Data measurement from side edges on 1st Floor (660 mm from wall).

Layout

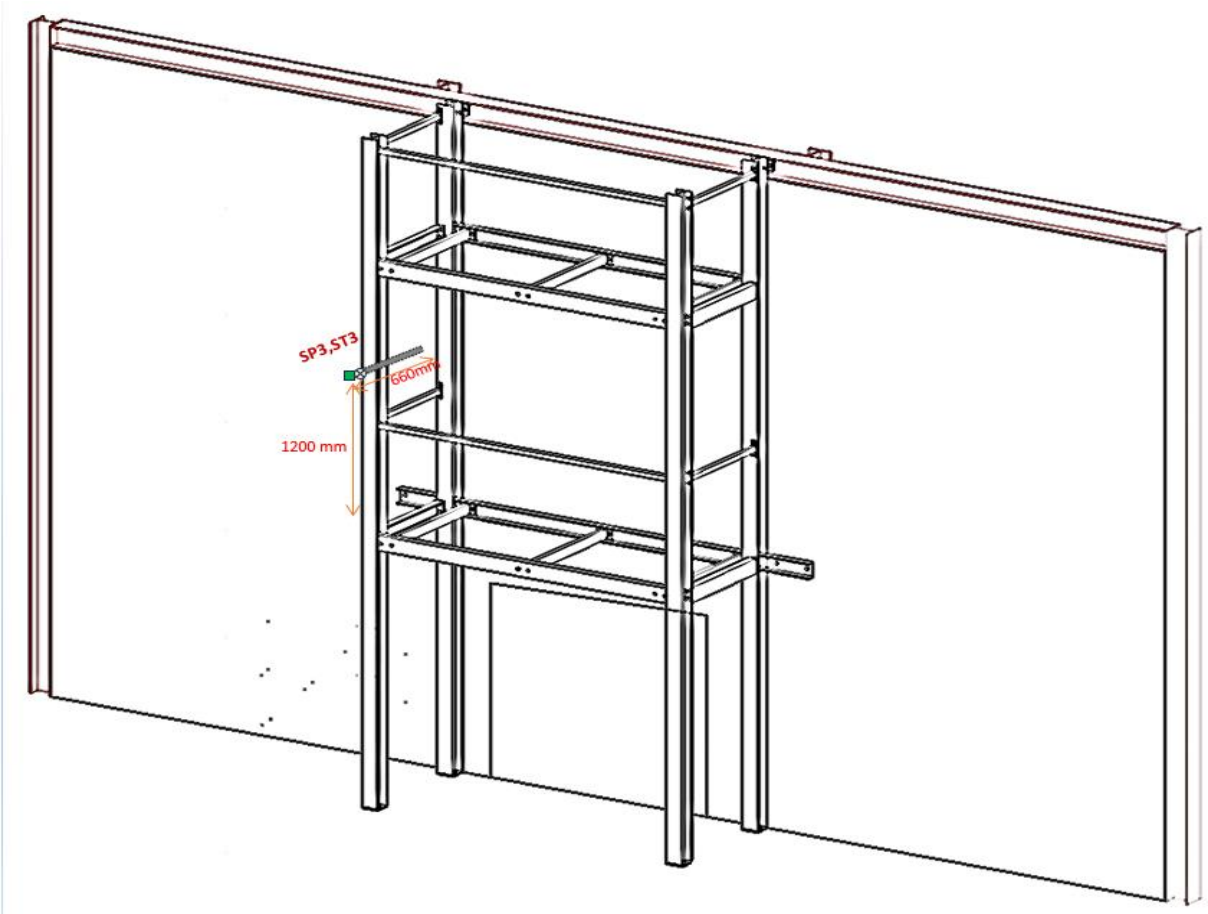

Temperature measured using plate TC on the side edge – 1st floor

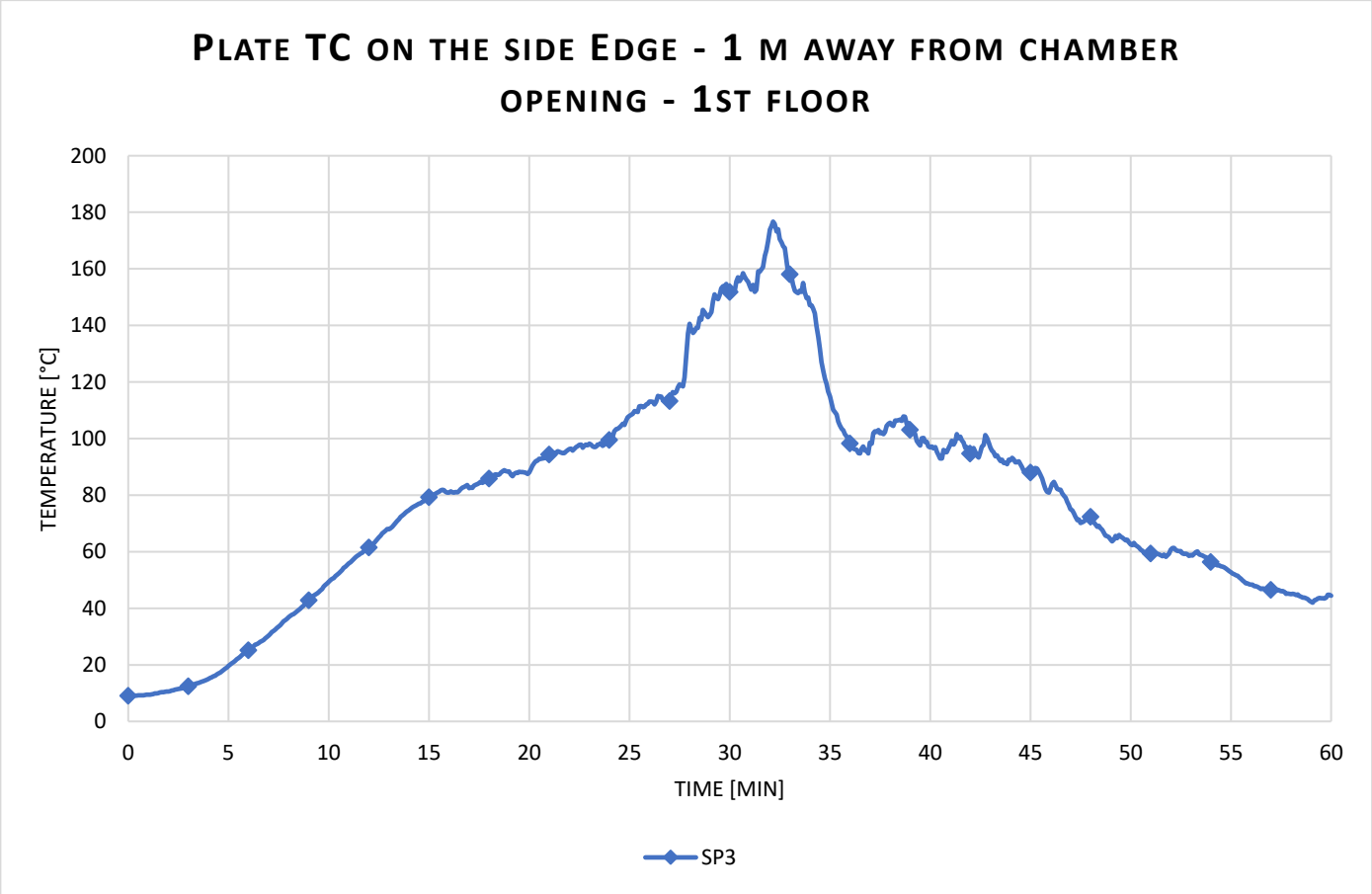

Temperature measured using Inconel on the side edge – 1st floor

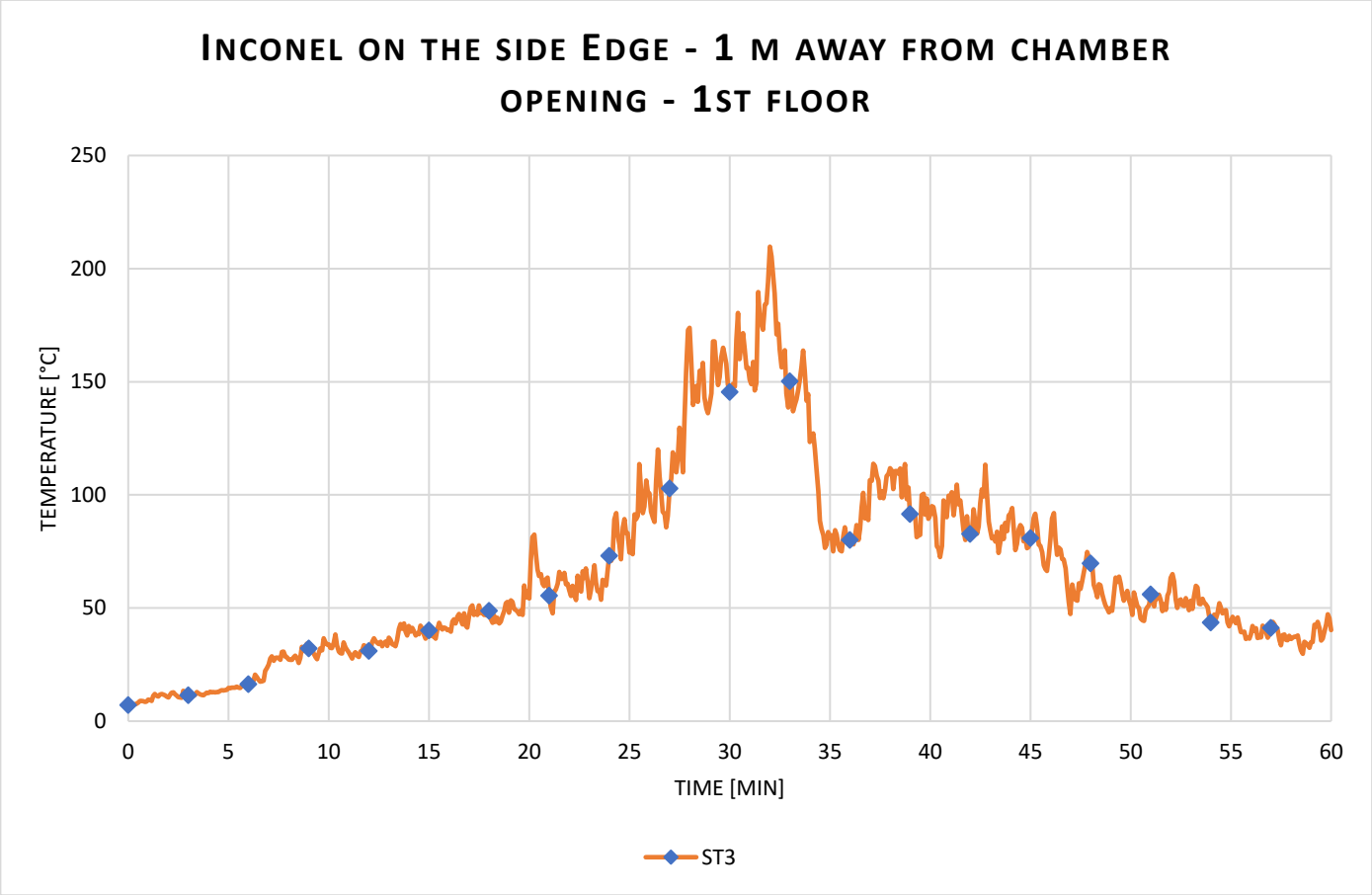

Radiant heat calculated from Plate TC

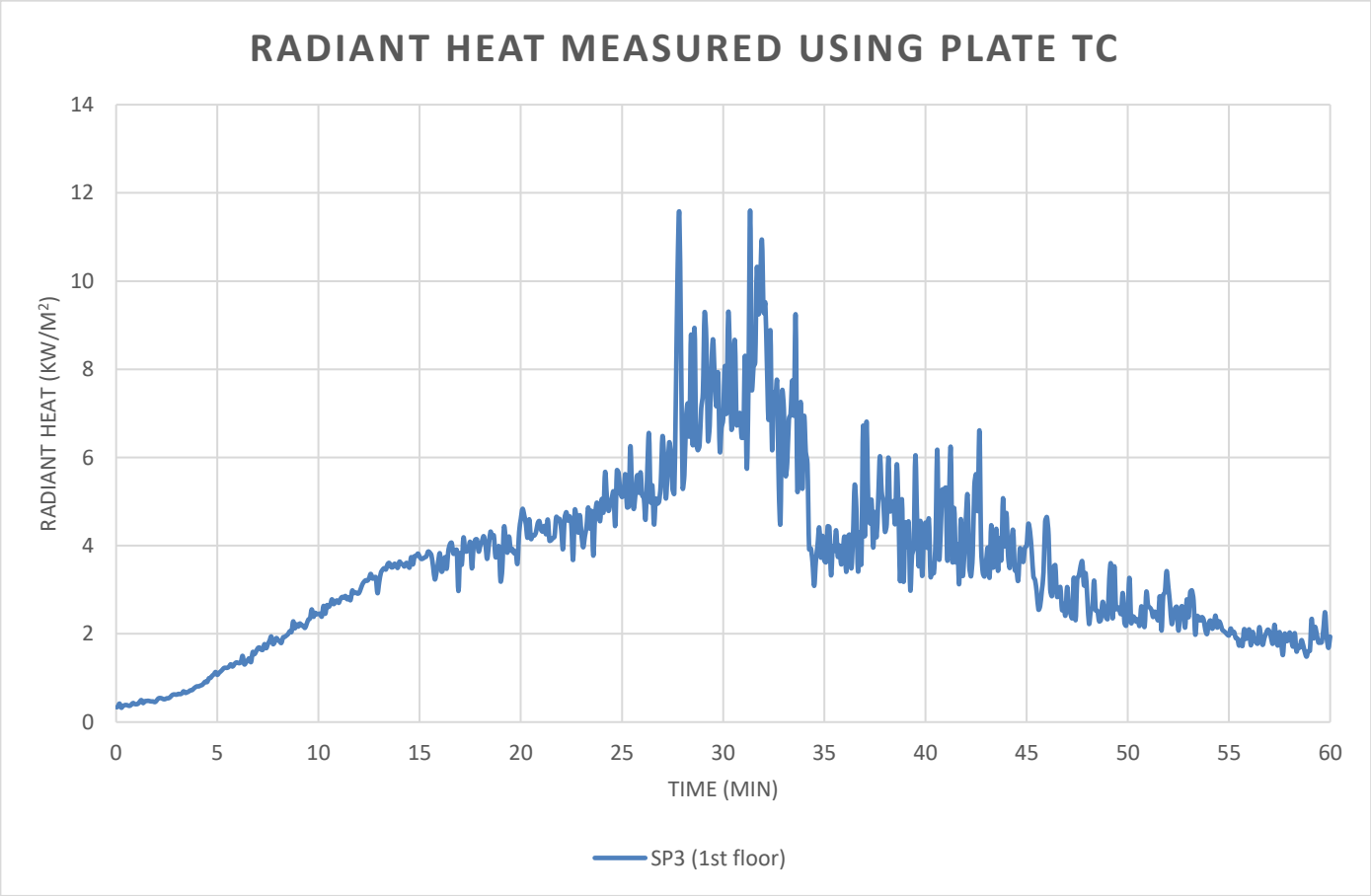

Data measurement from side edges on 2nd Floor (660 mm from wall).

Layout

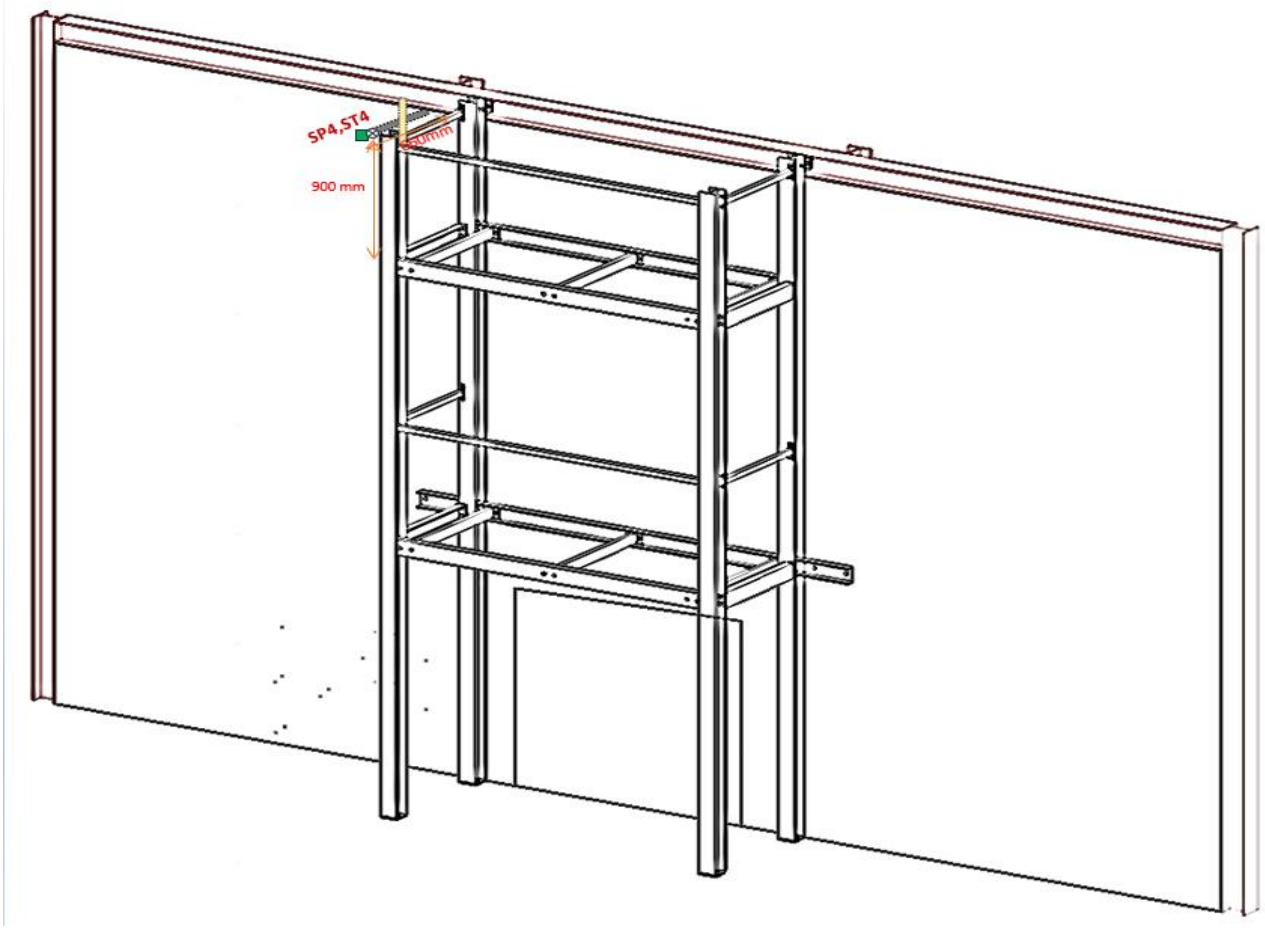

Temperature measured using plate TC's on the side edge – 2nd floor

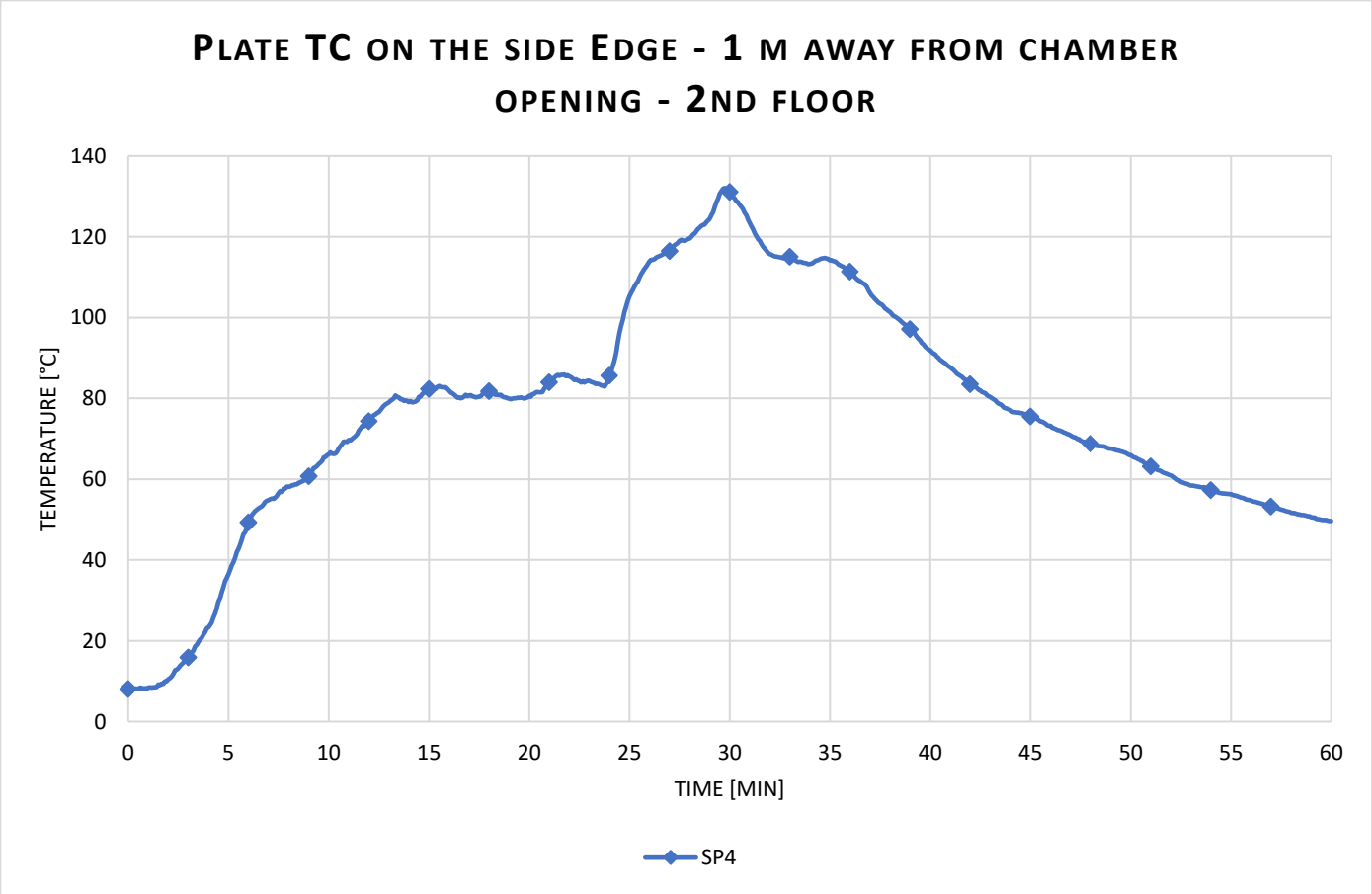

Temperature measured using Inconels on the side edge – 2nd floor

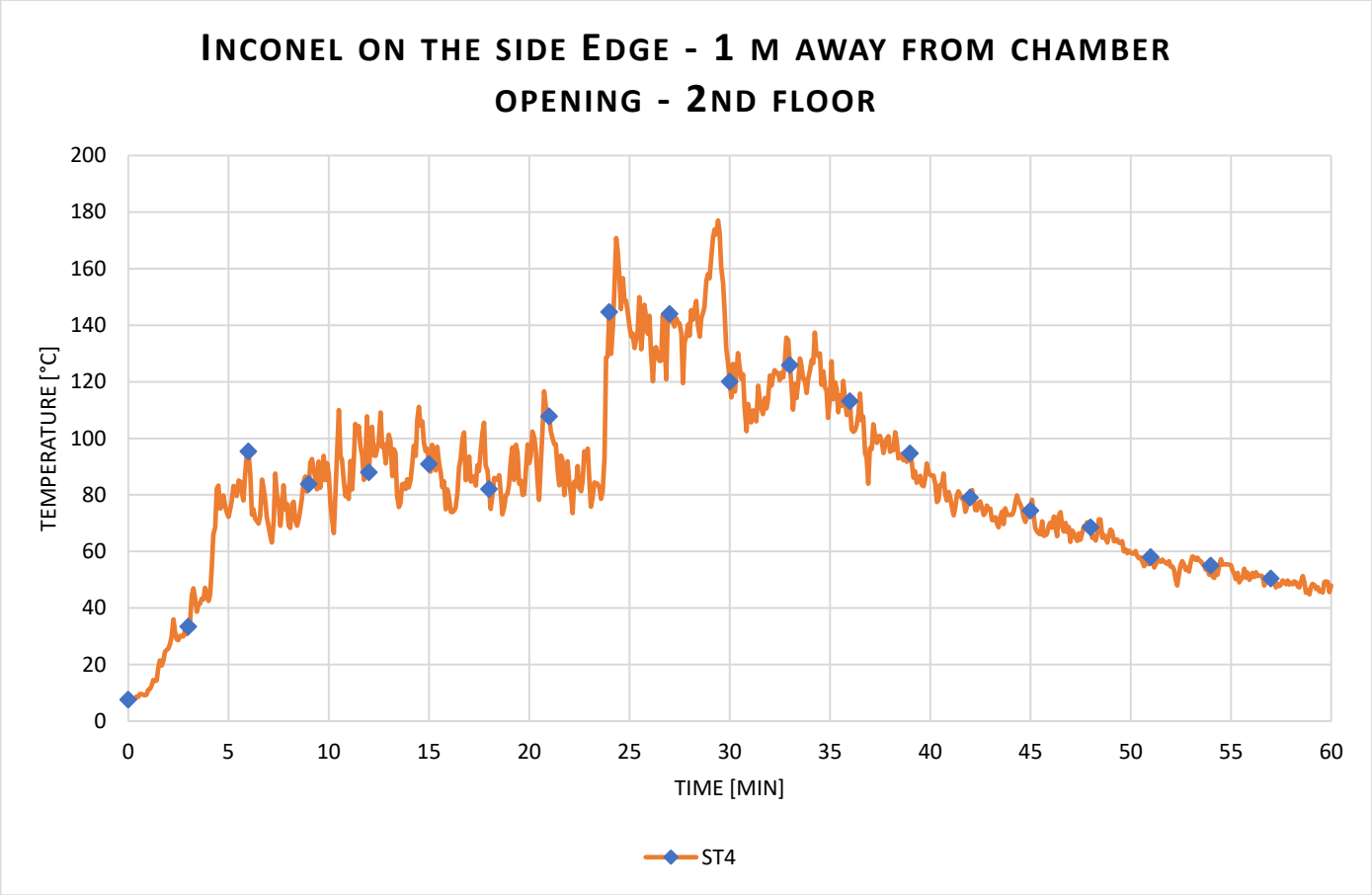

Radiant heat calculated from Plate TC

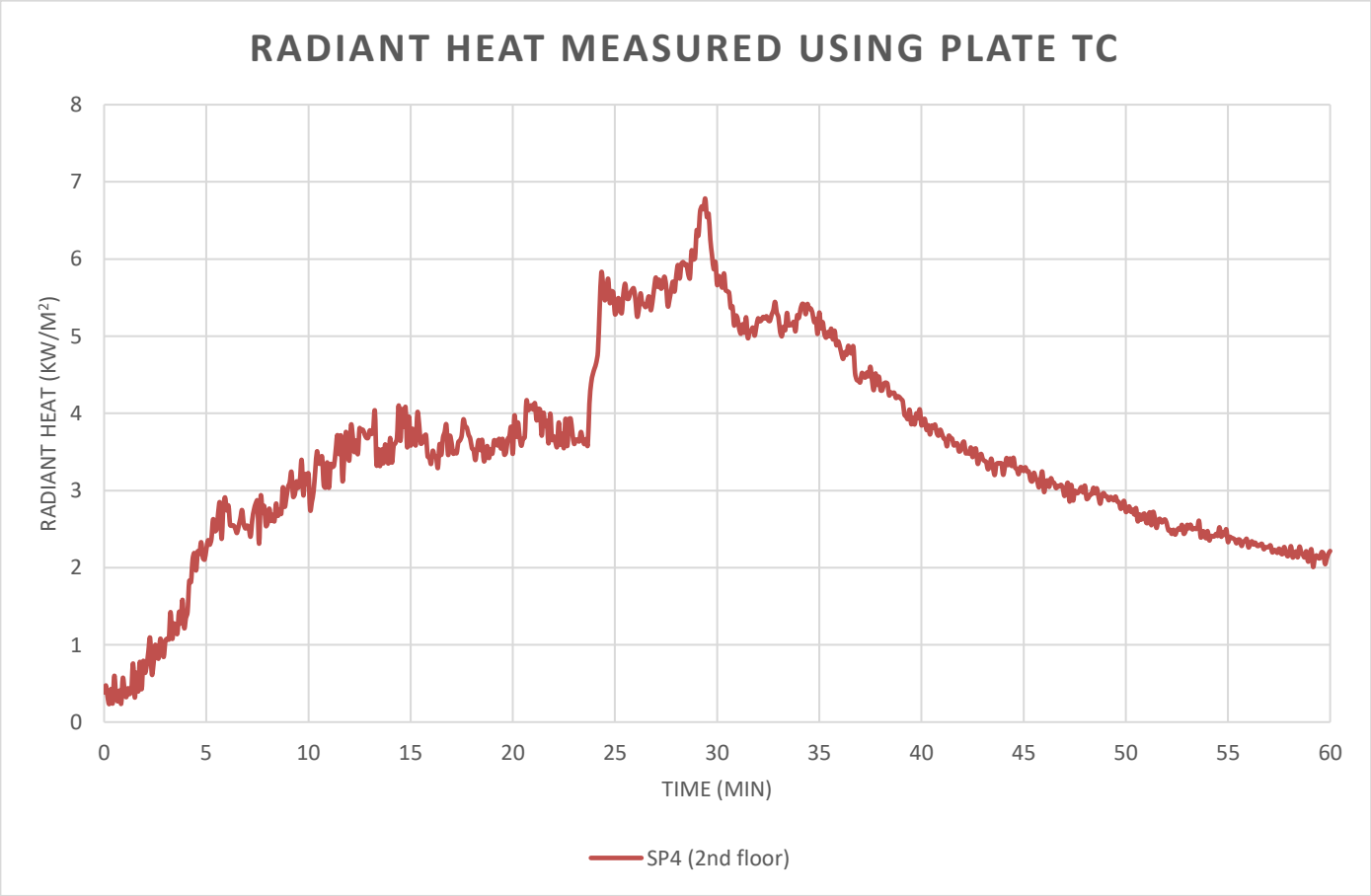

Data measurement from 1st floor wall.

Layout

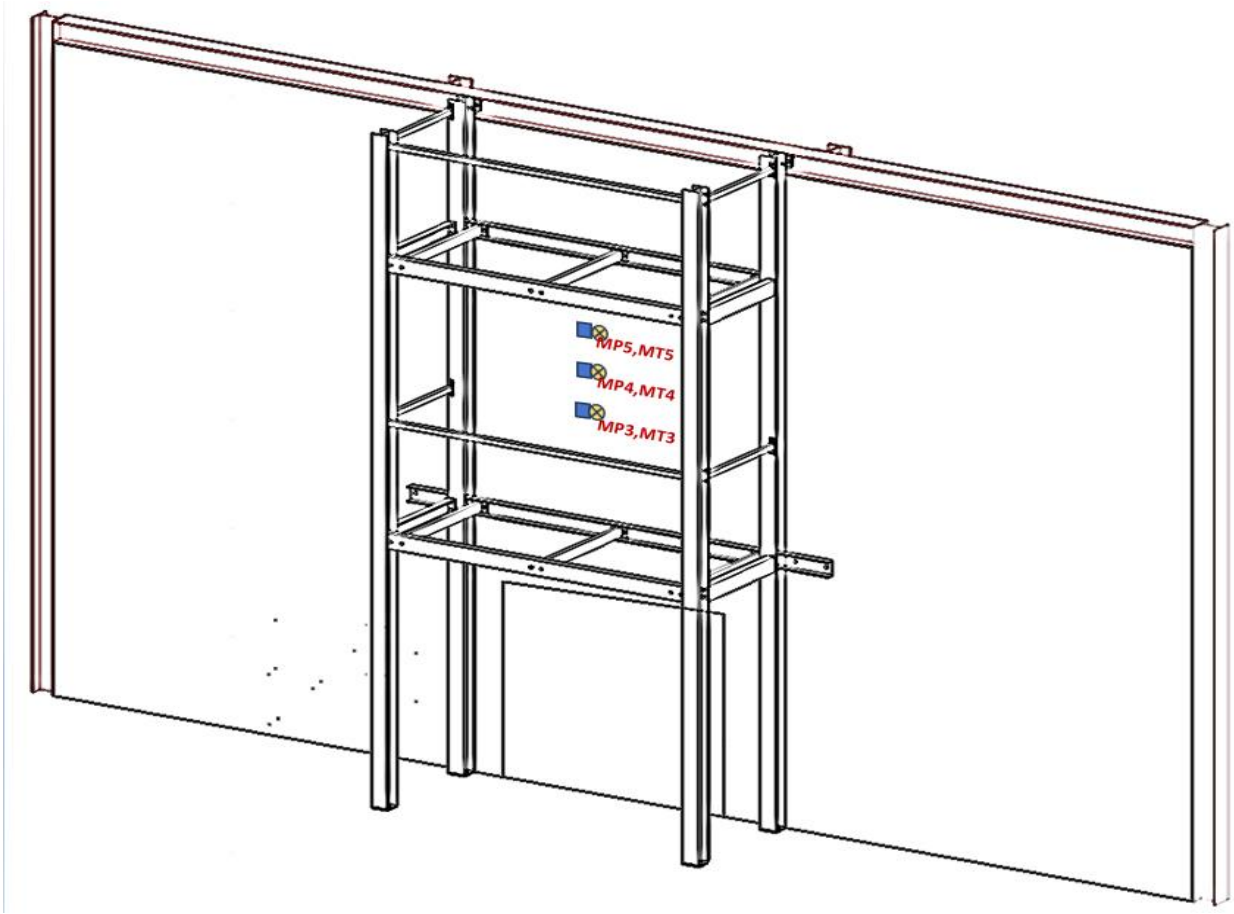

Temperature measured from the Plate TC's on wall at 1st floor

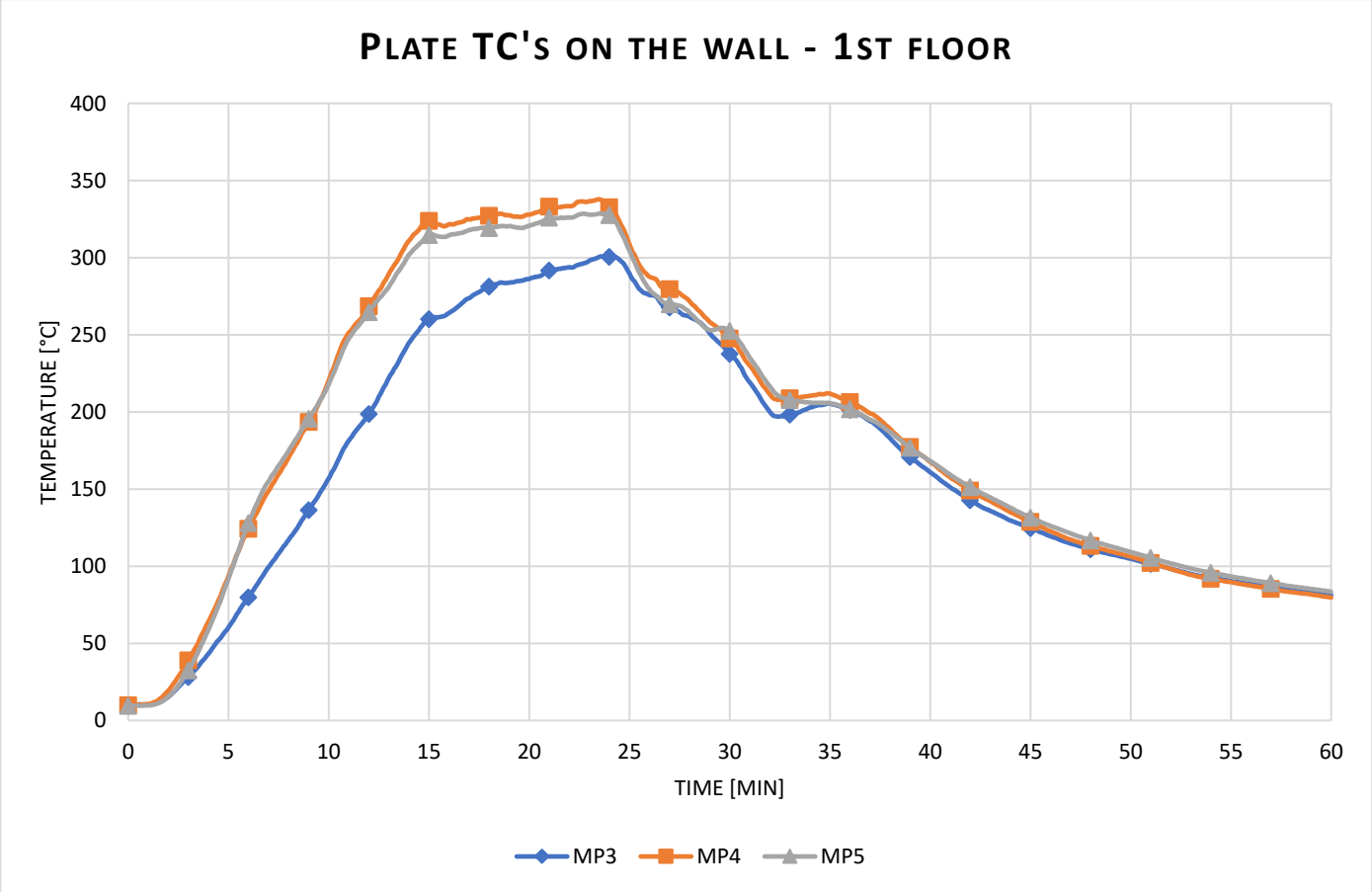

Temperature measured from the Inconels on wall at 1st floor

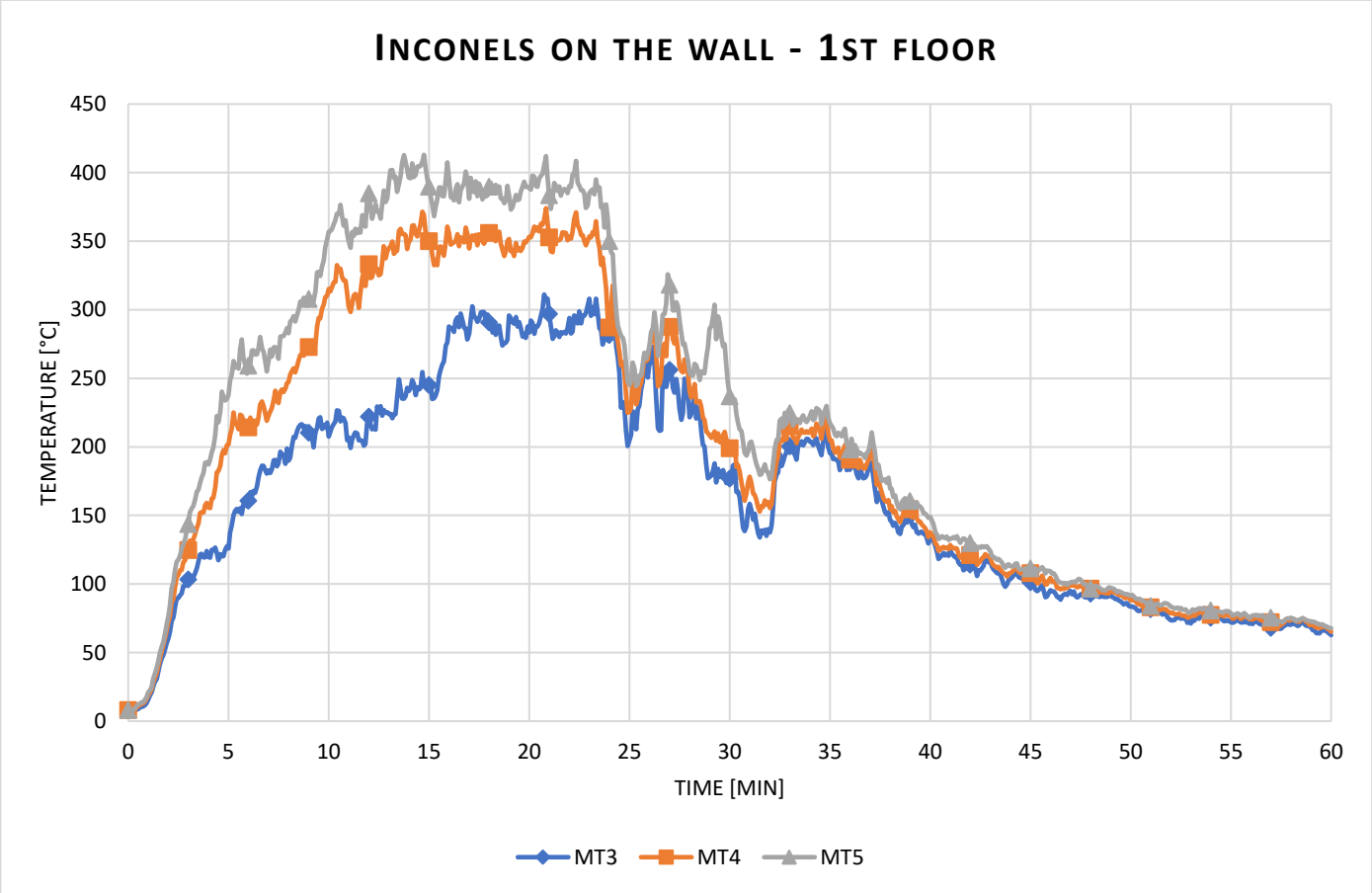

Radiant heat calculated from Plate TC

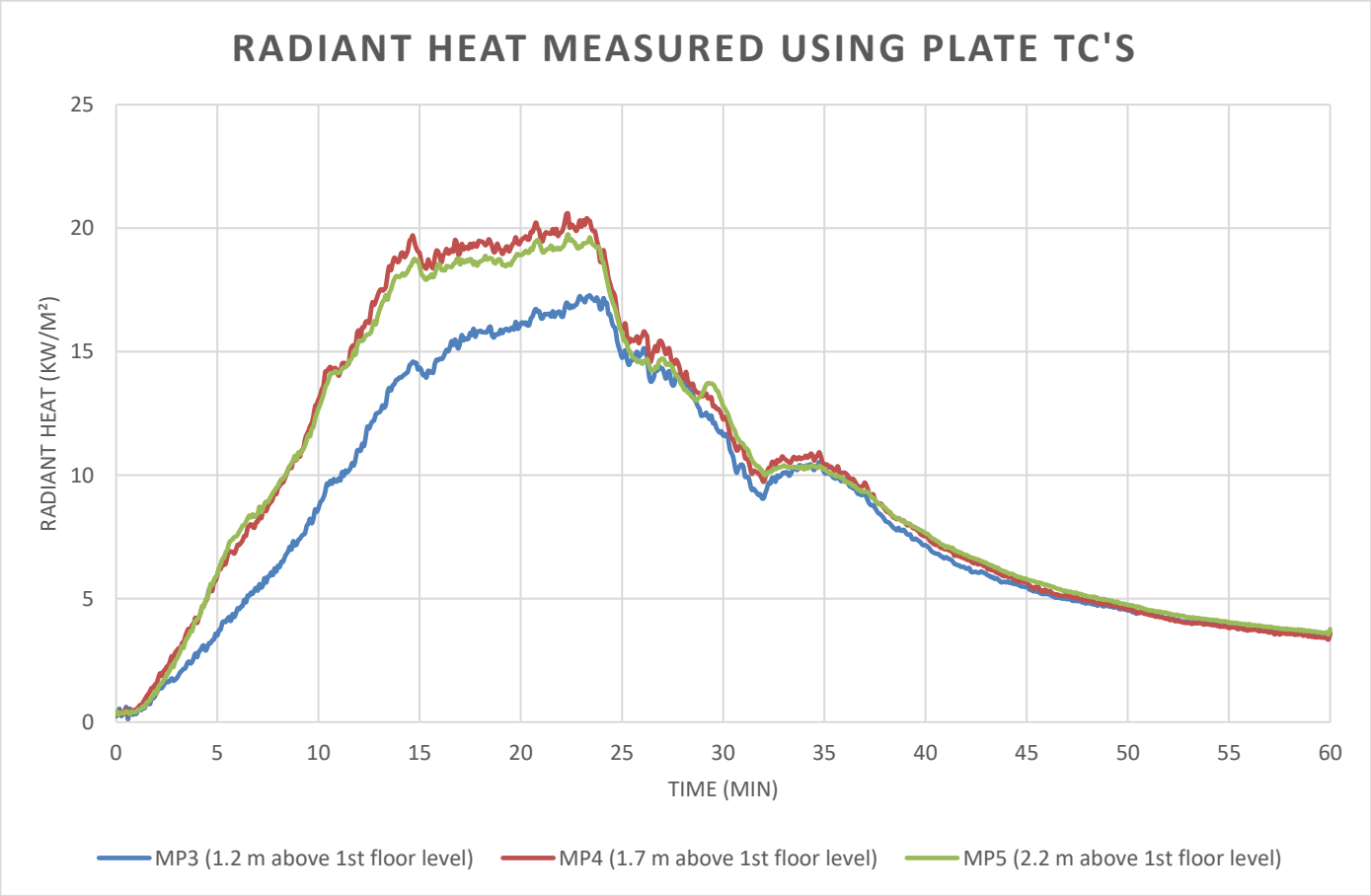

Data measurement from 2nd floor wall.

Layout

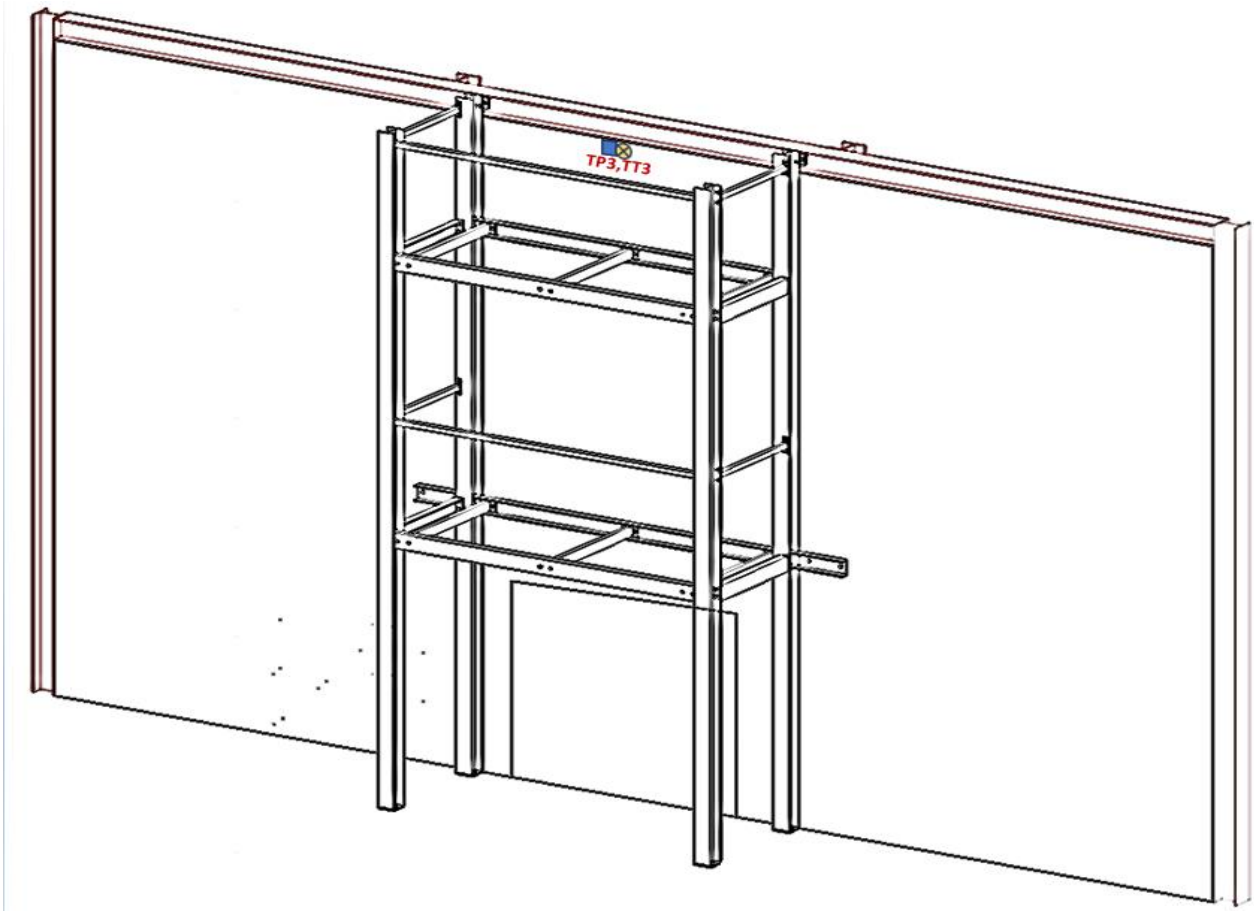

Temperature measured from Plate TC on the wall at 2nd floor

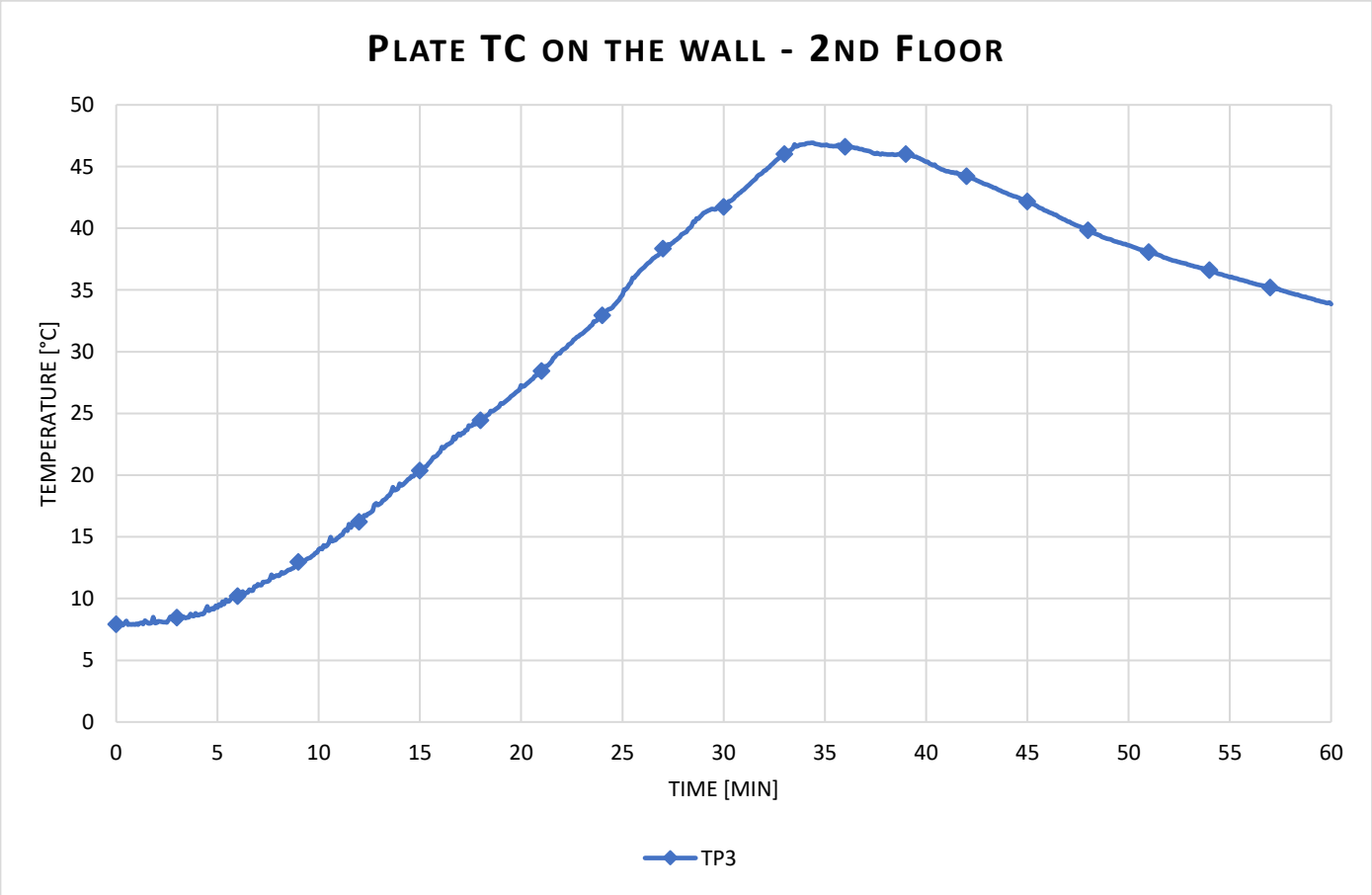

Temperature measured from Inconel on the wall at 2nd floor

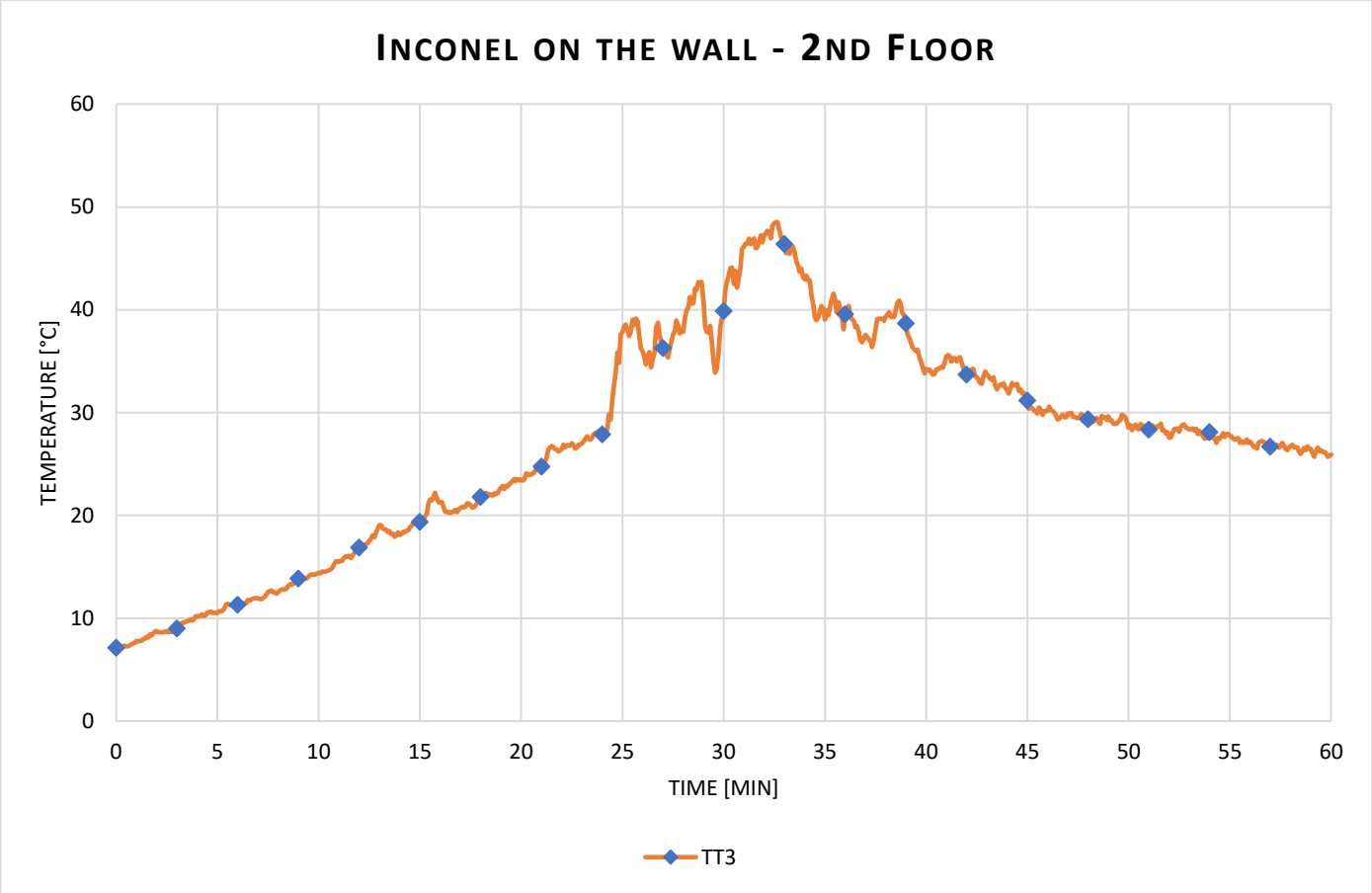

Radiant heat calculated from Plate TC

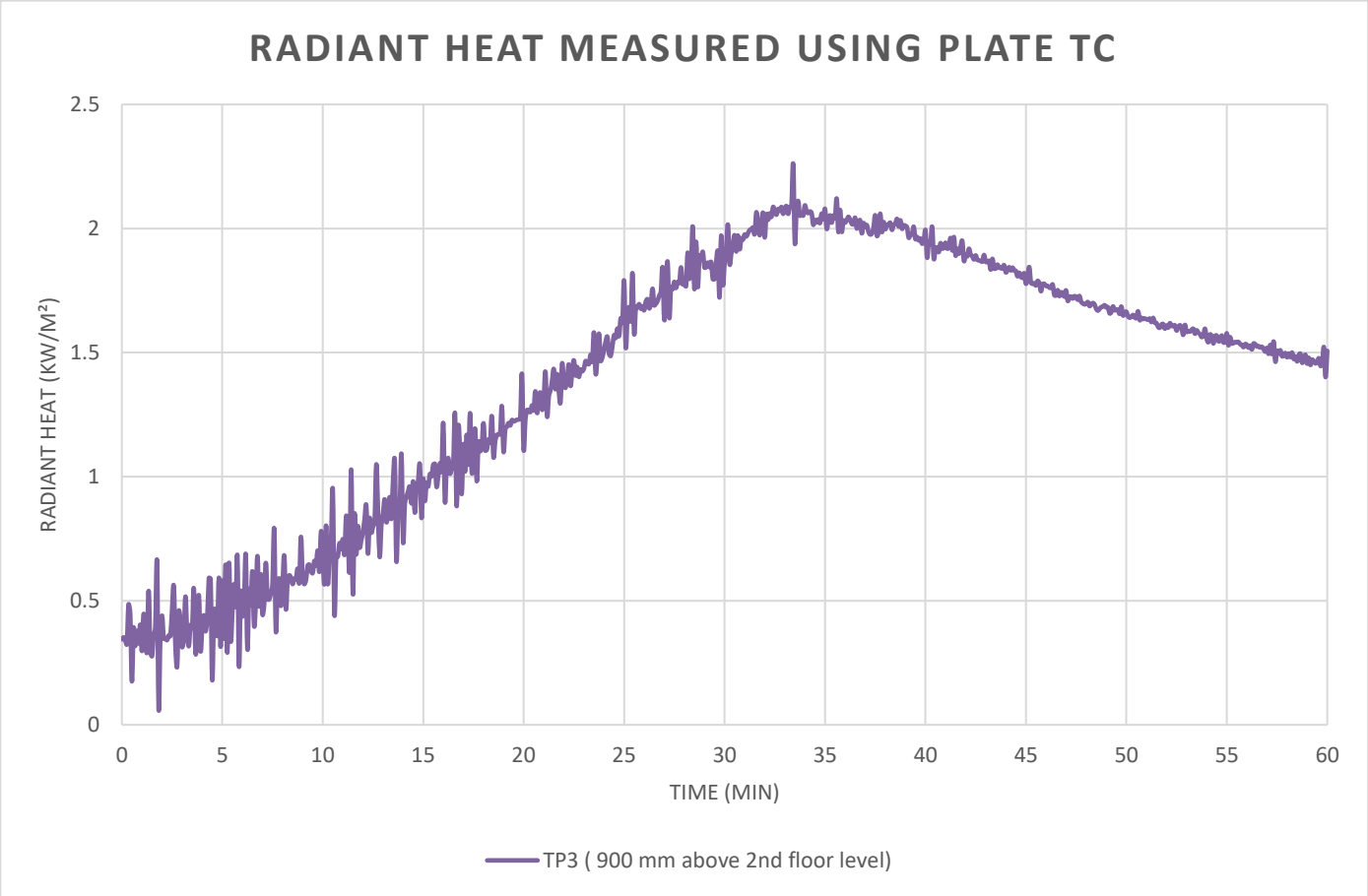

Data measurement from 1st floor exposed edge.

Layout

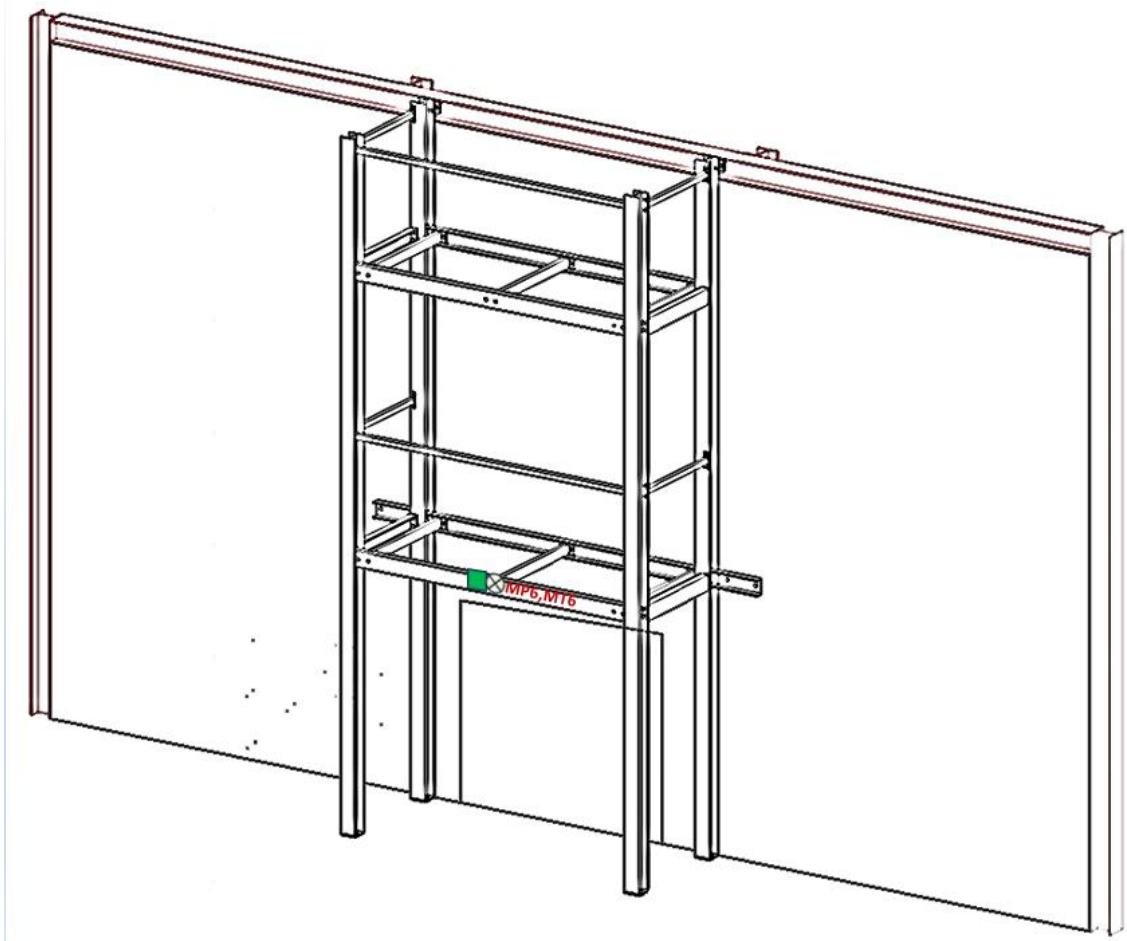

Temperature measured using plate TC 1st floor exposed edge

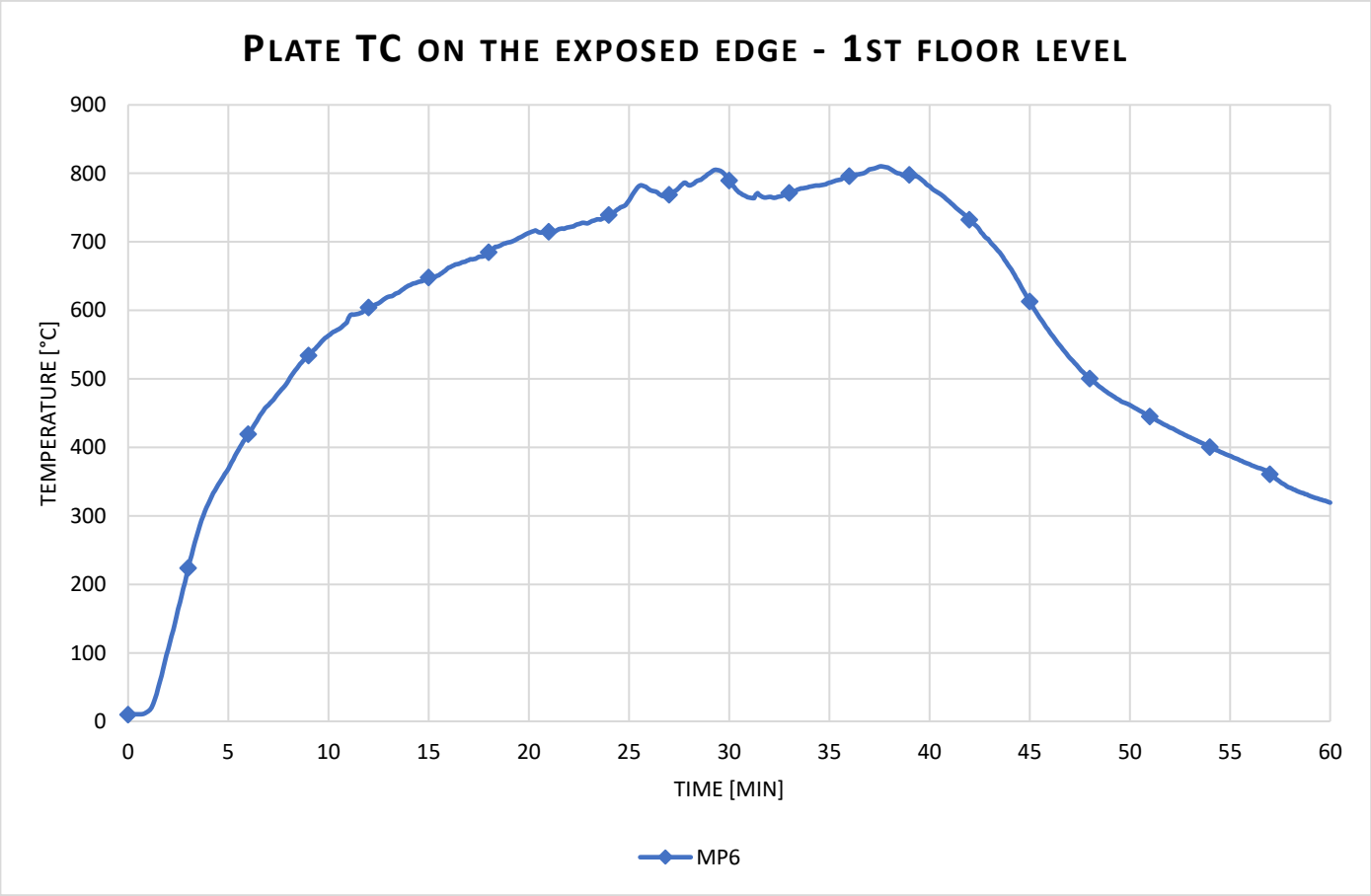

Temperature measured using plate Inconel 1st floor exposed edge

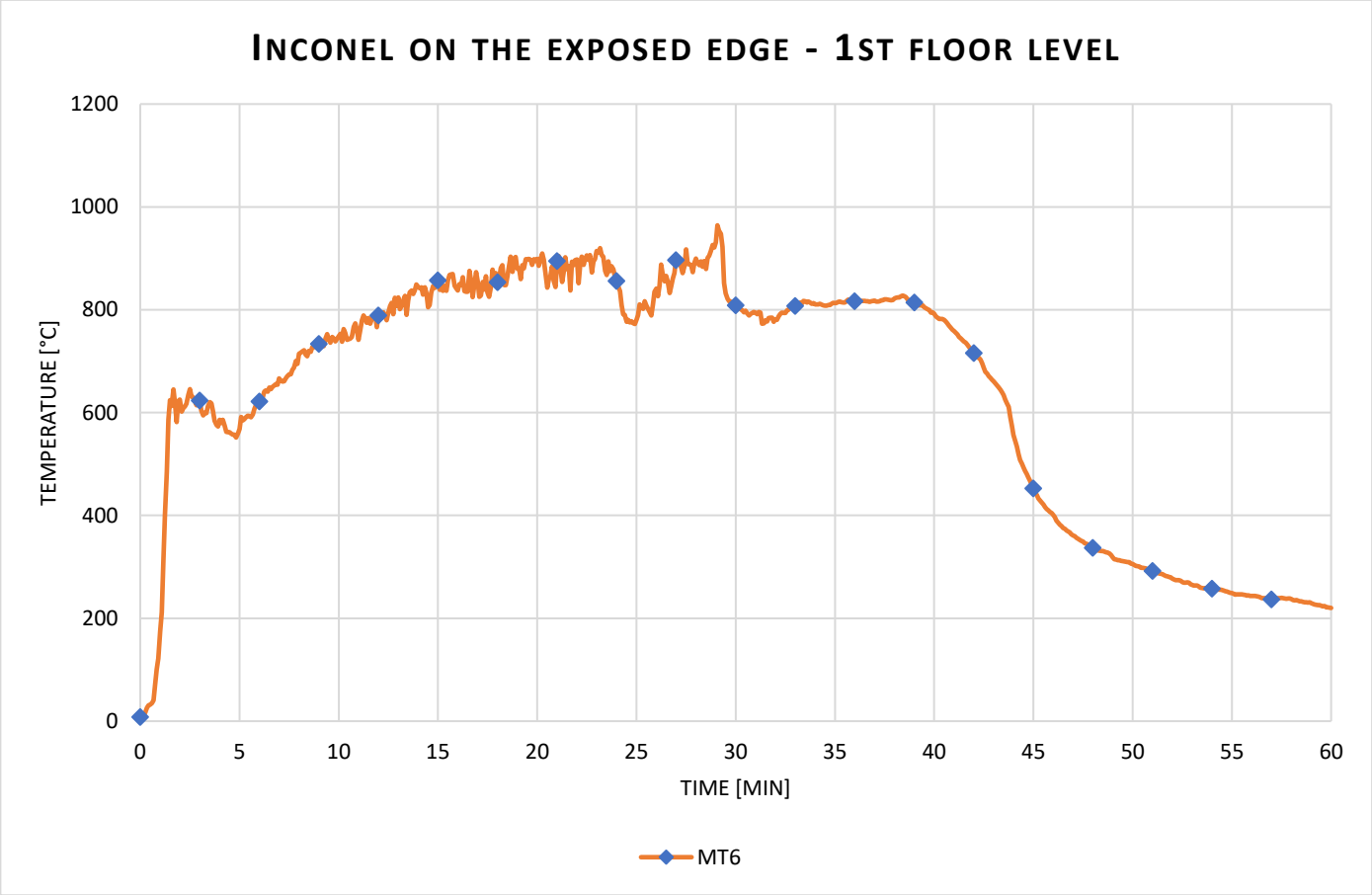

Radiant heat calculated from Plate TC

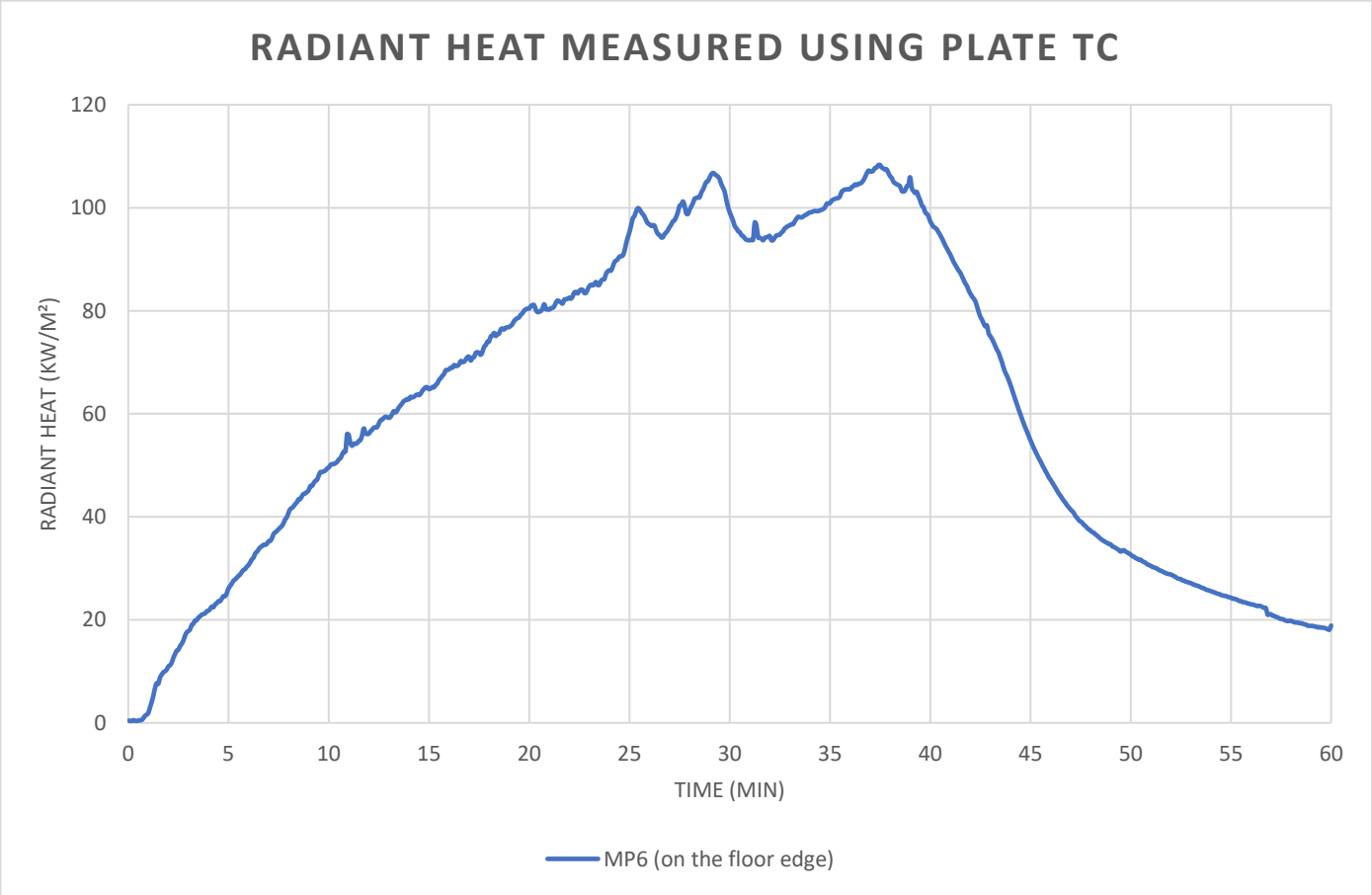

Data measurement from 1st floor exposed edge.

Layout

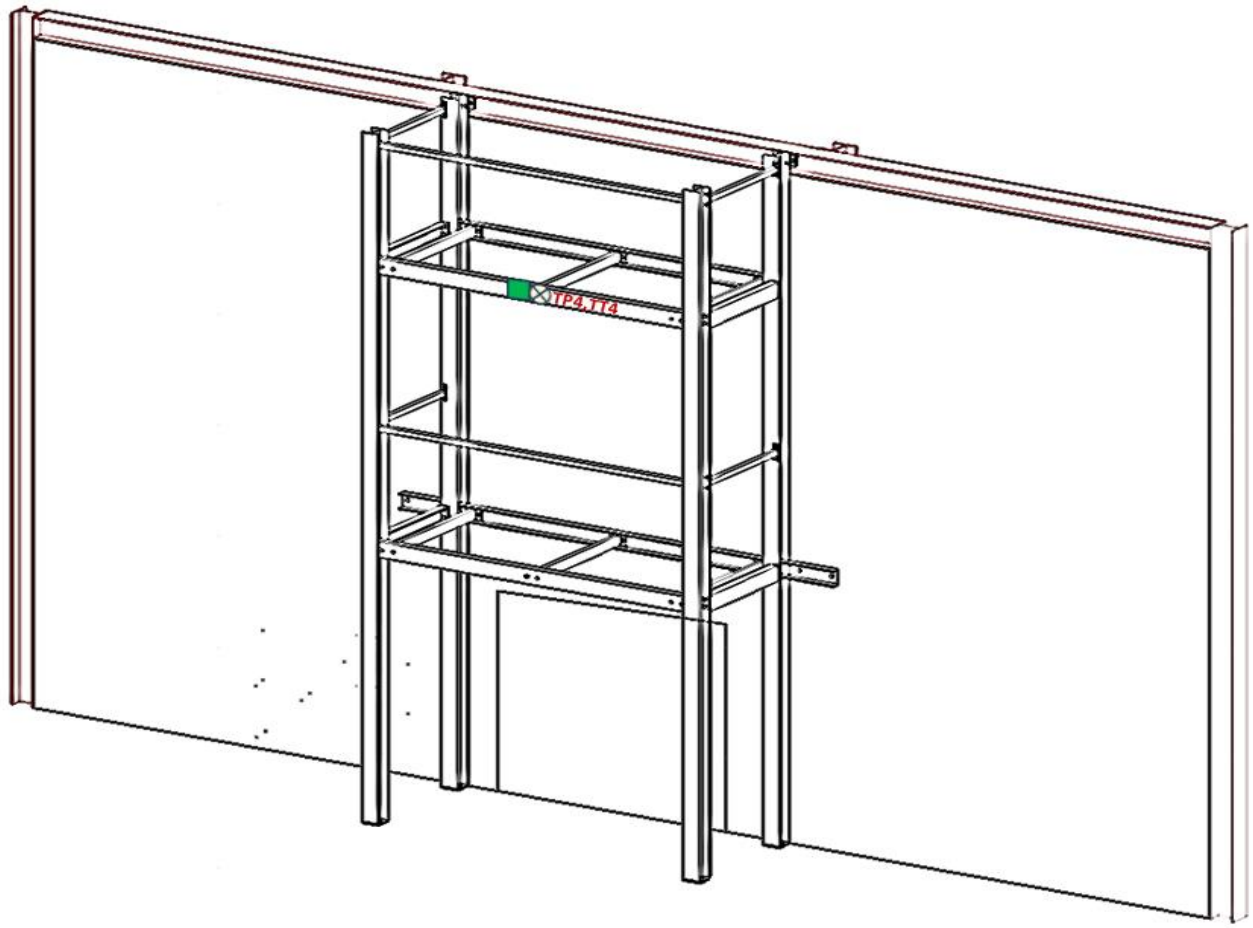

Temperature measured from the Plate TC on exposed edge at 2nd floor

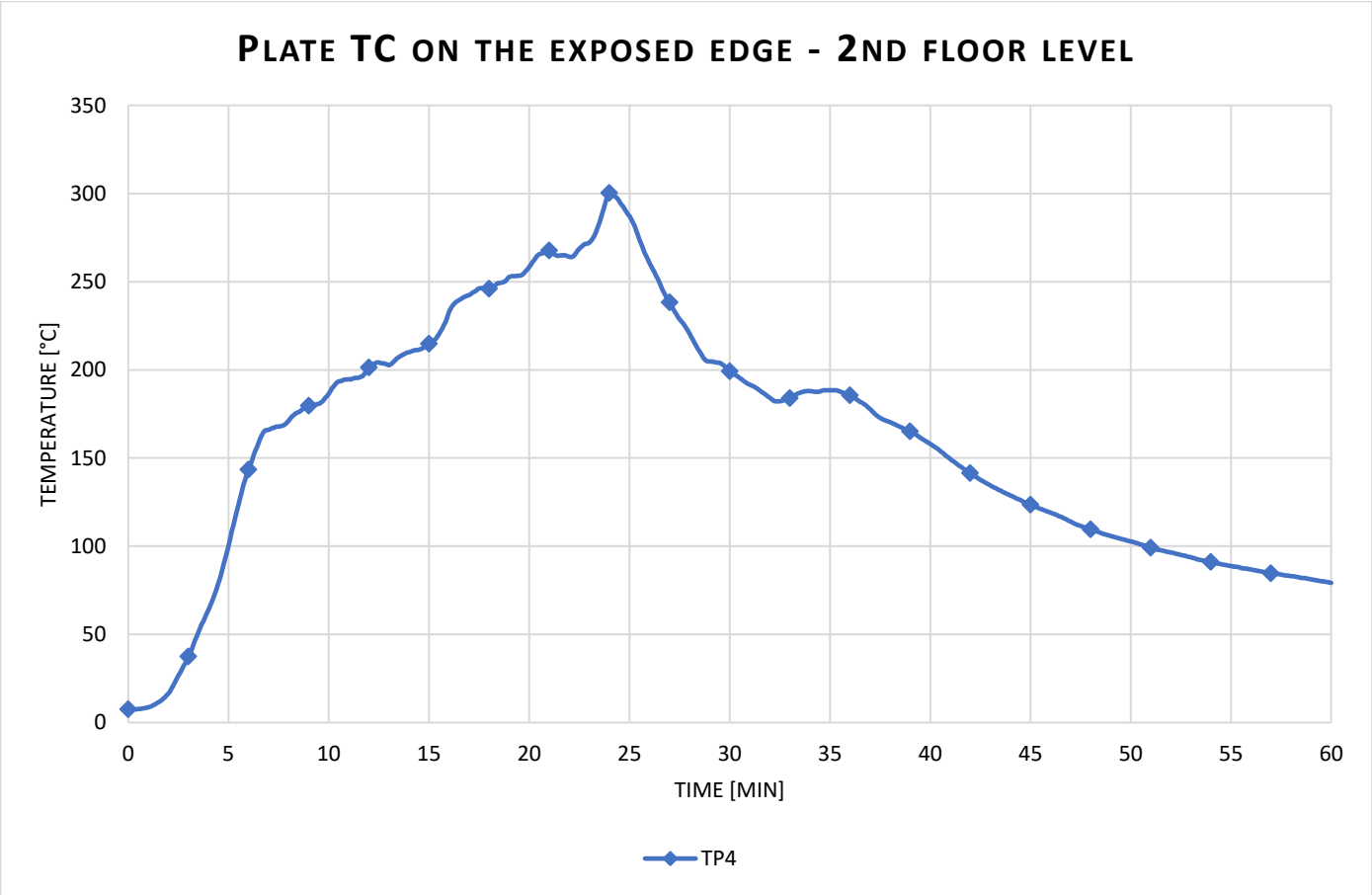

Temperature measured from the Inconel on exposed edge at 2nd floor

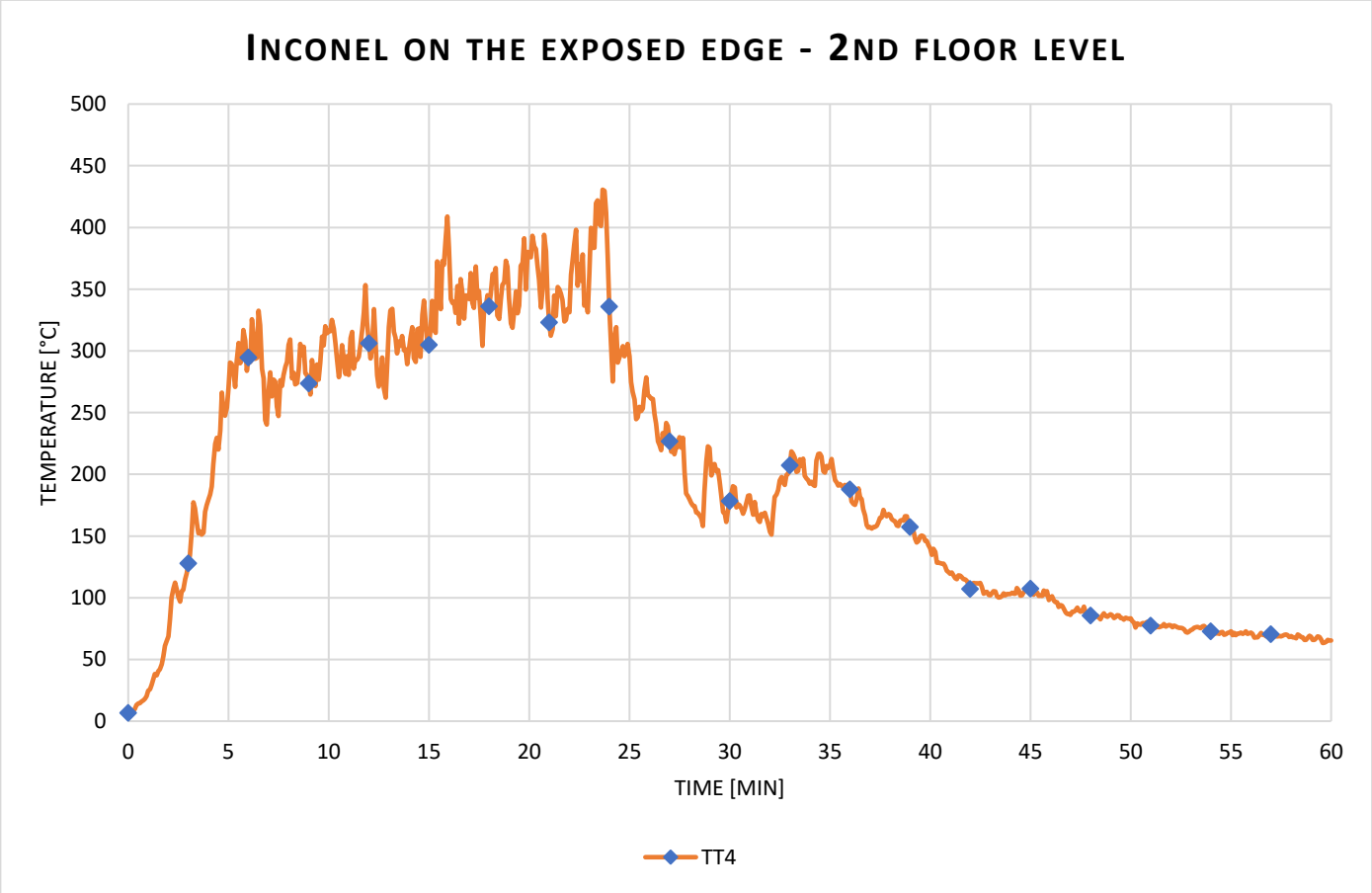

Radiant heat calculated from Plate TC

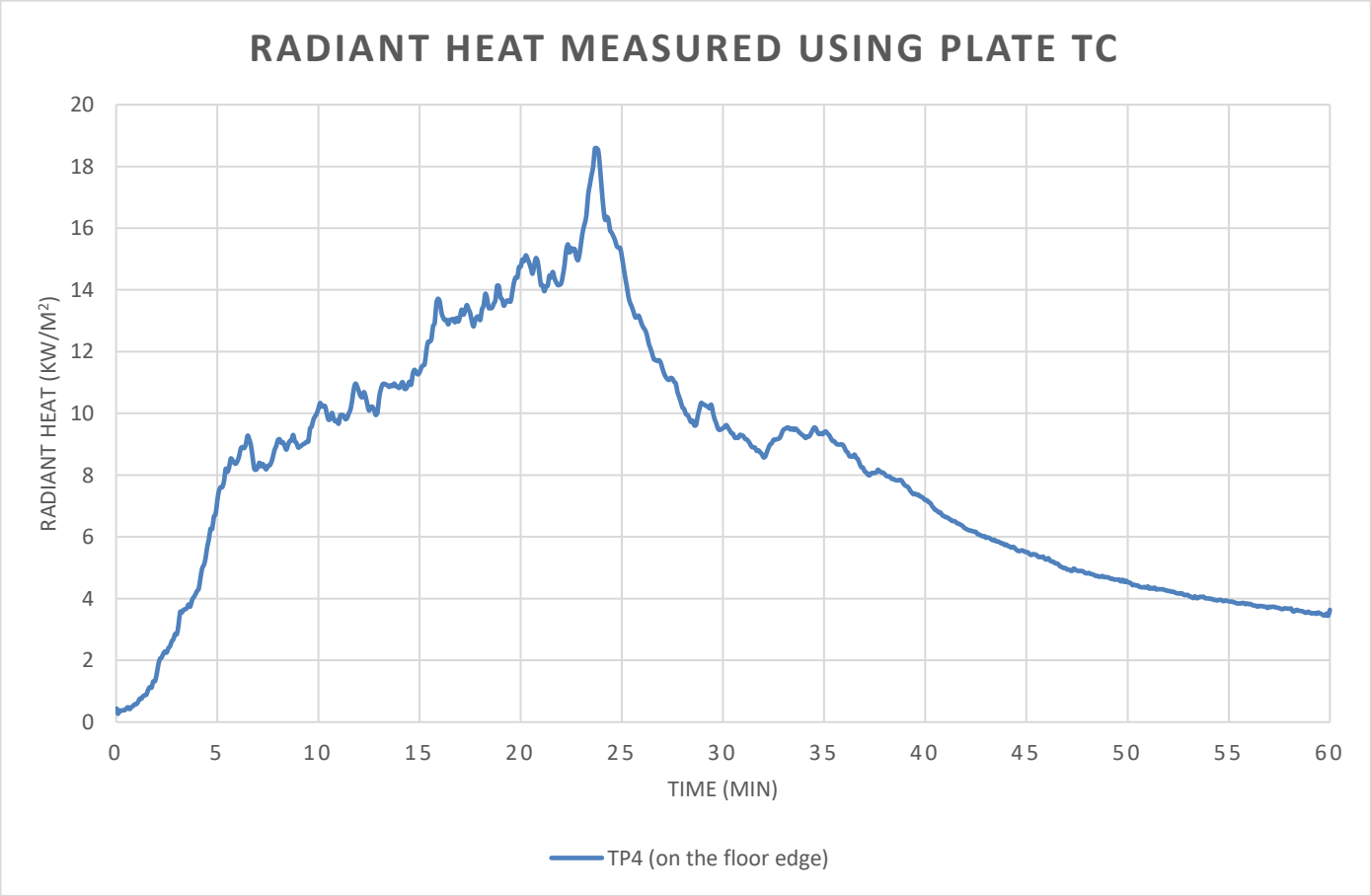

Data measurement from 1st floor handrails.

Layout

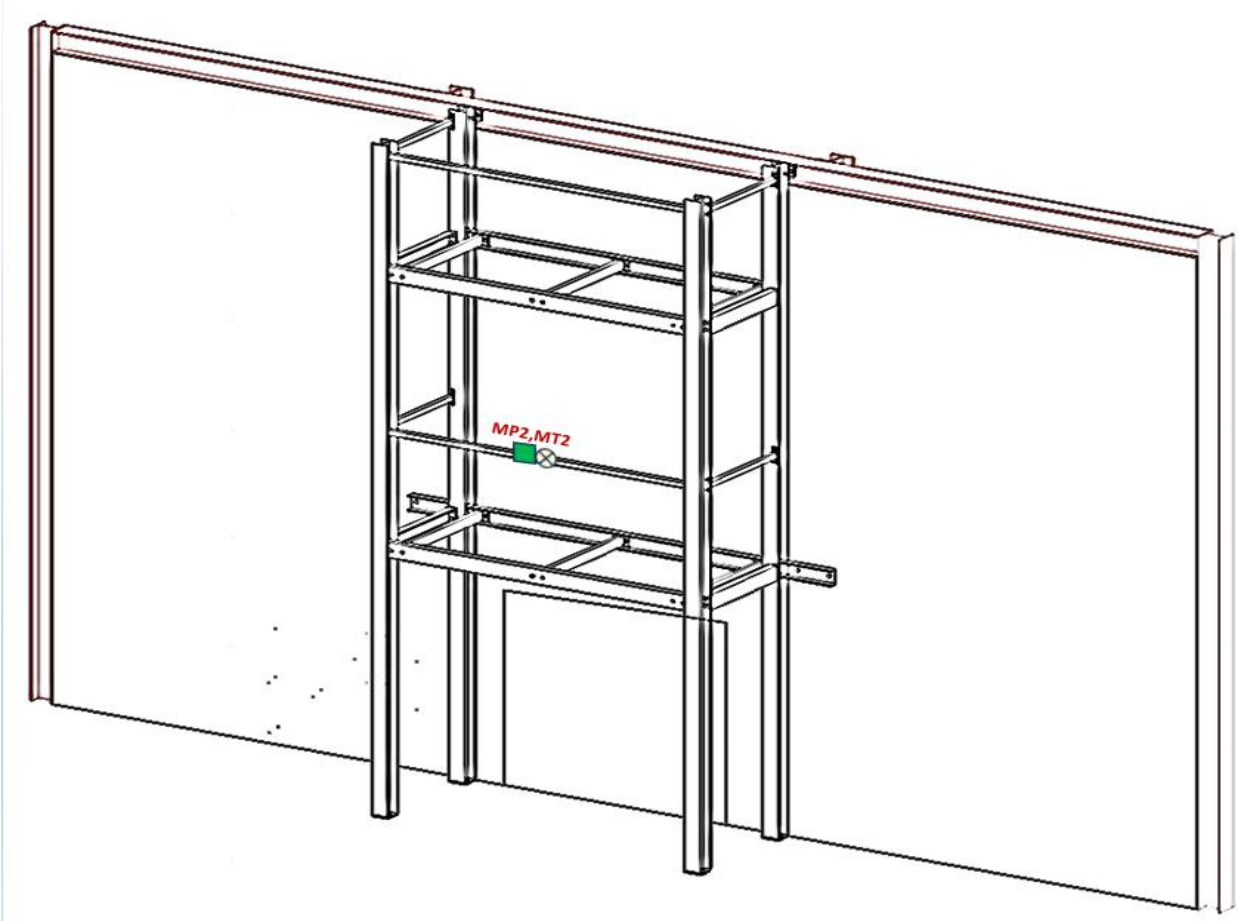

Temperature measured from the Plate TC on 1st floor handrails

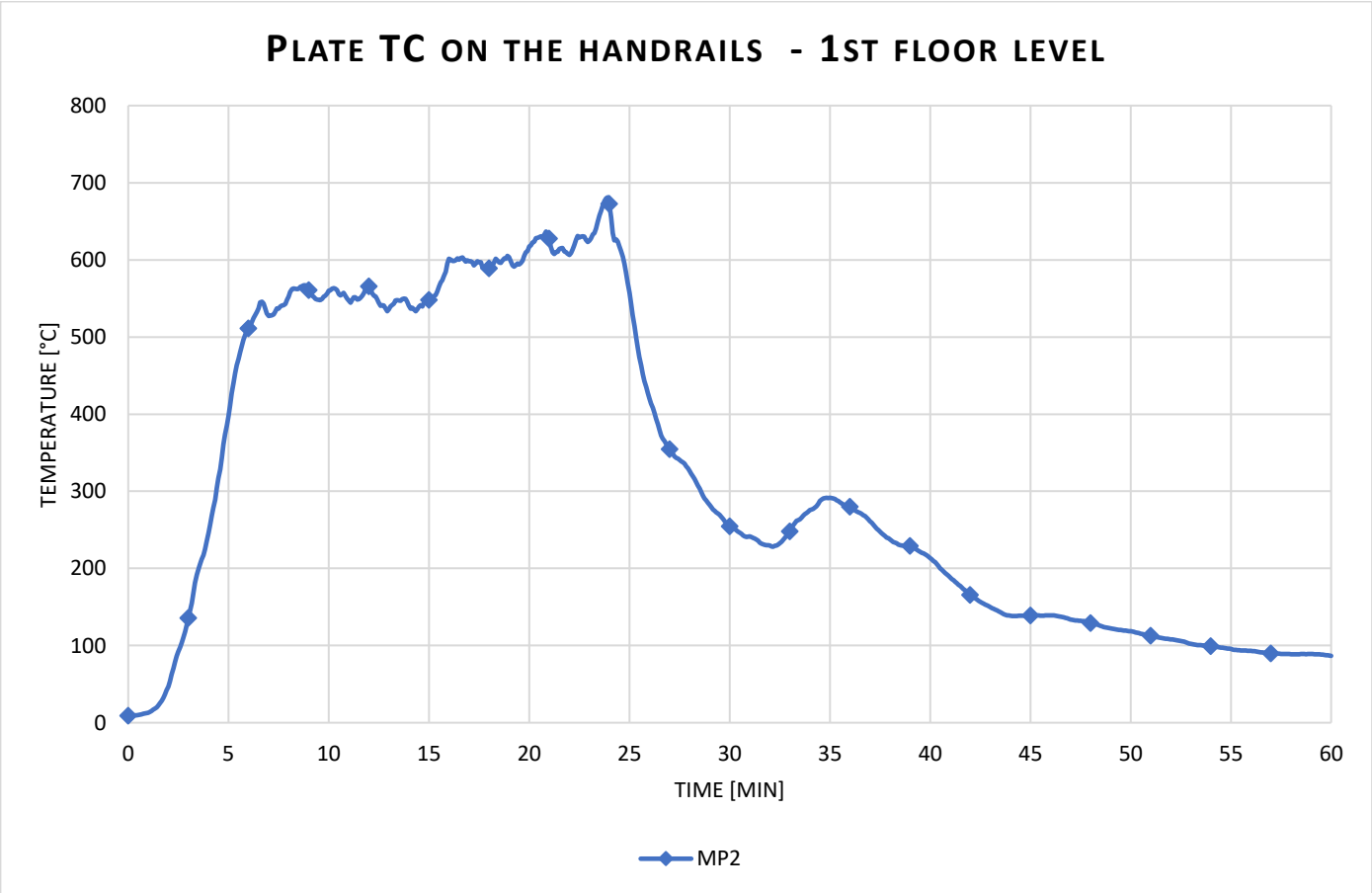

Temperature measured from the Inconel on 1st floor handrails

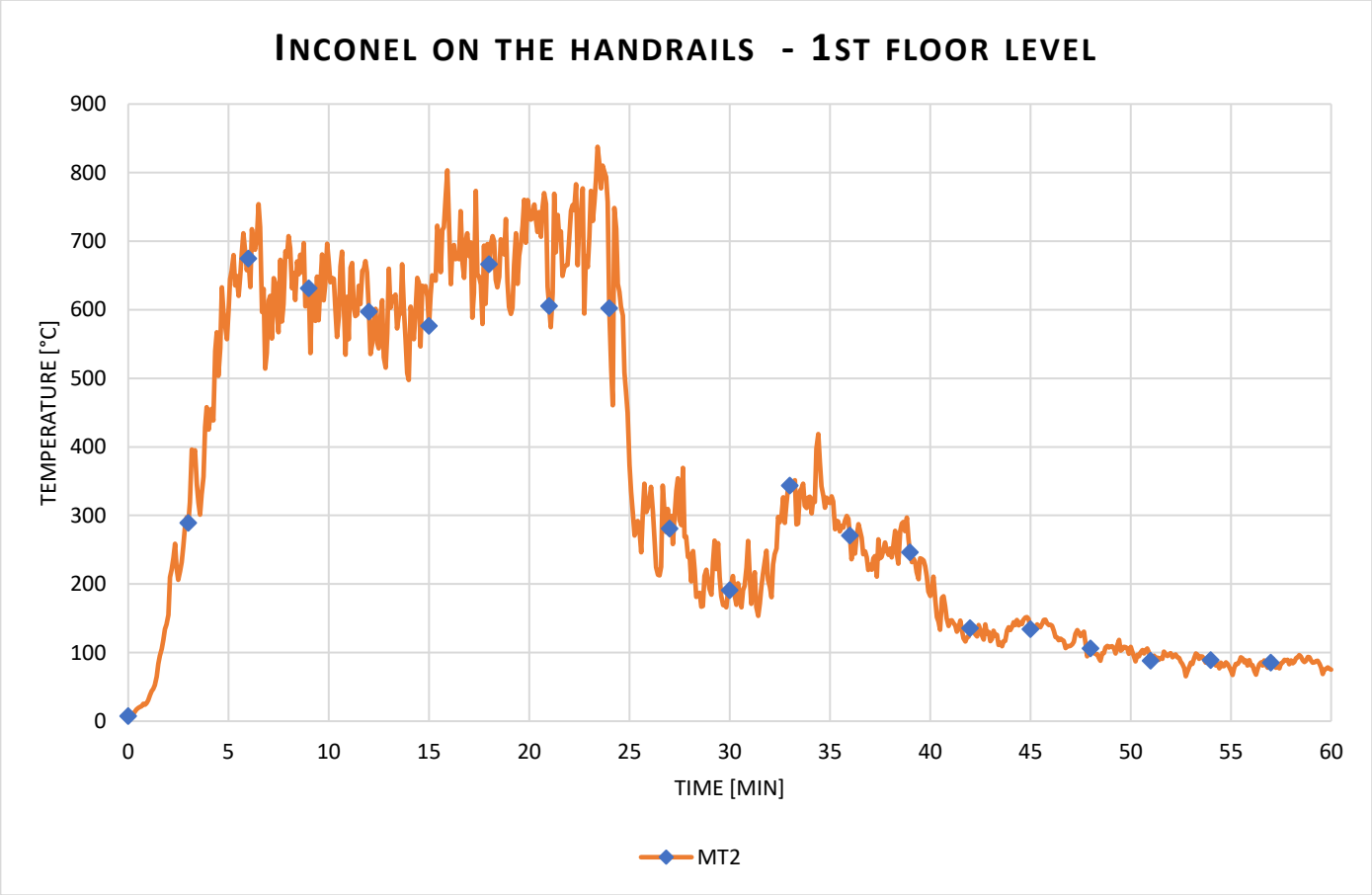

Radiant heat calculated from Plate TC

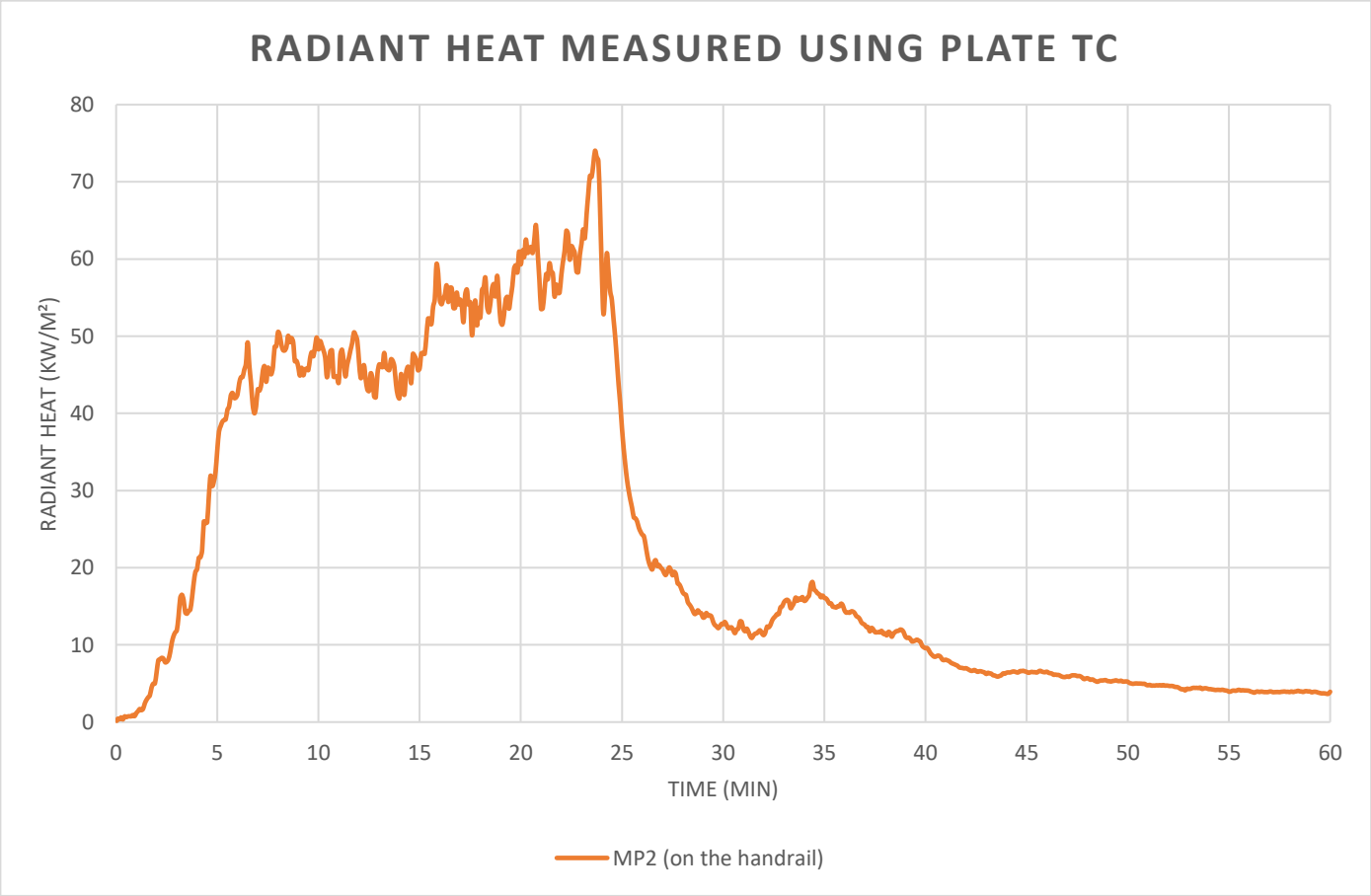

Data measurement from 2nd floor handrails.

Layout

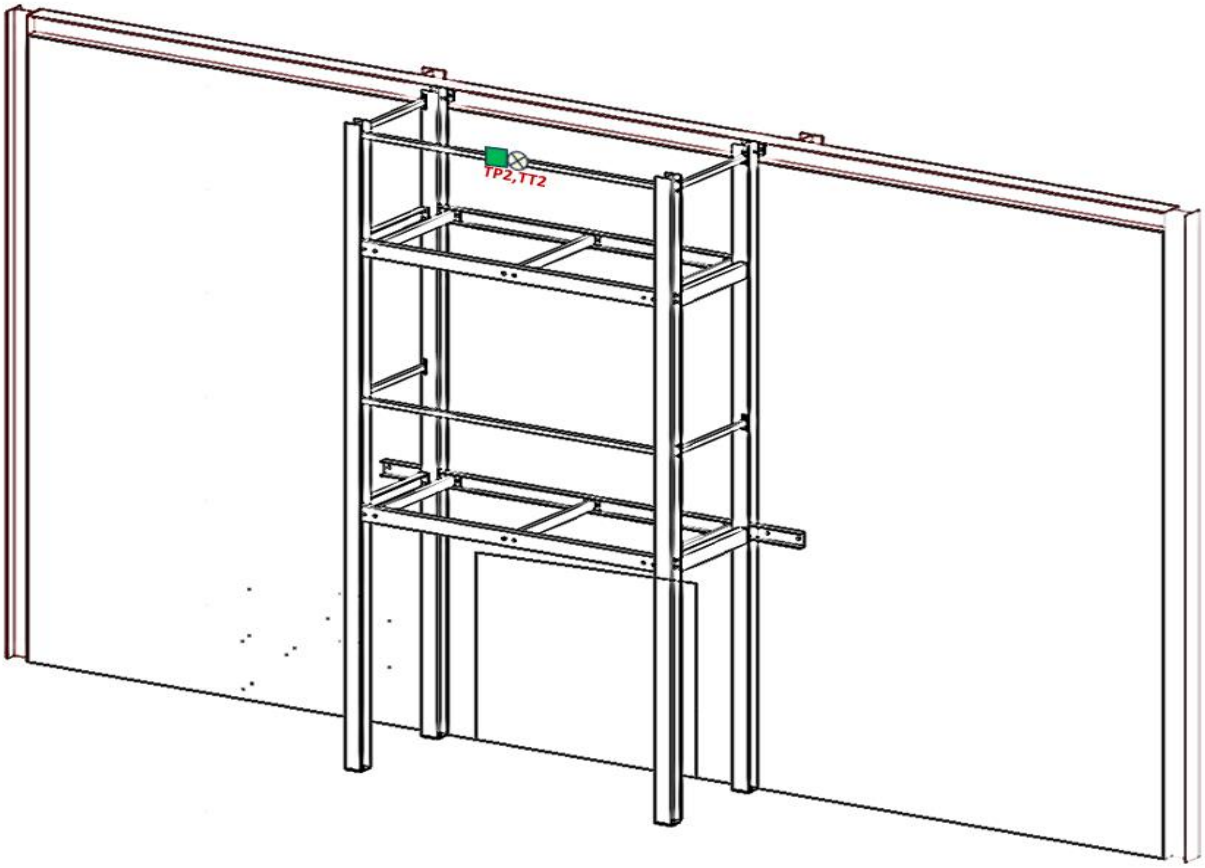

Temperature measured from the Plate TC on 2nd floor handrails (Broken during test after 27min 30 sec).

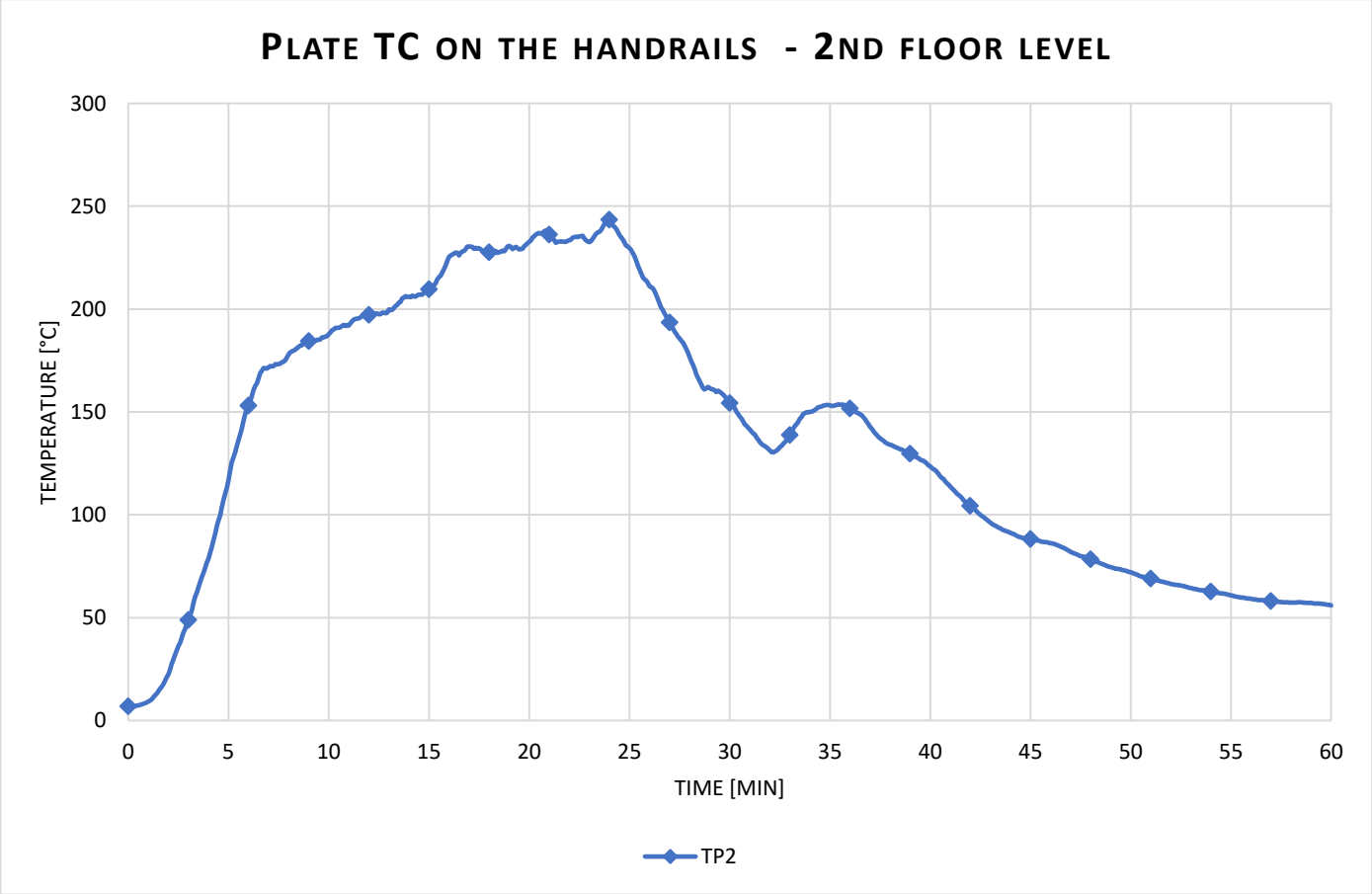

Temperature measured from the Inconel on 2nd floor handrails

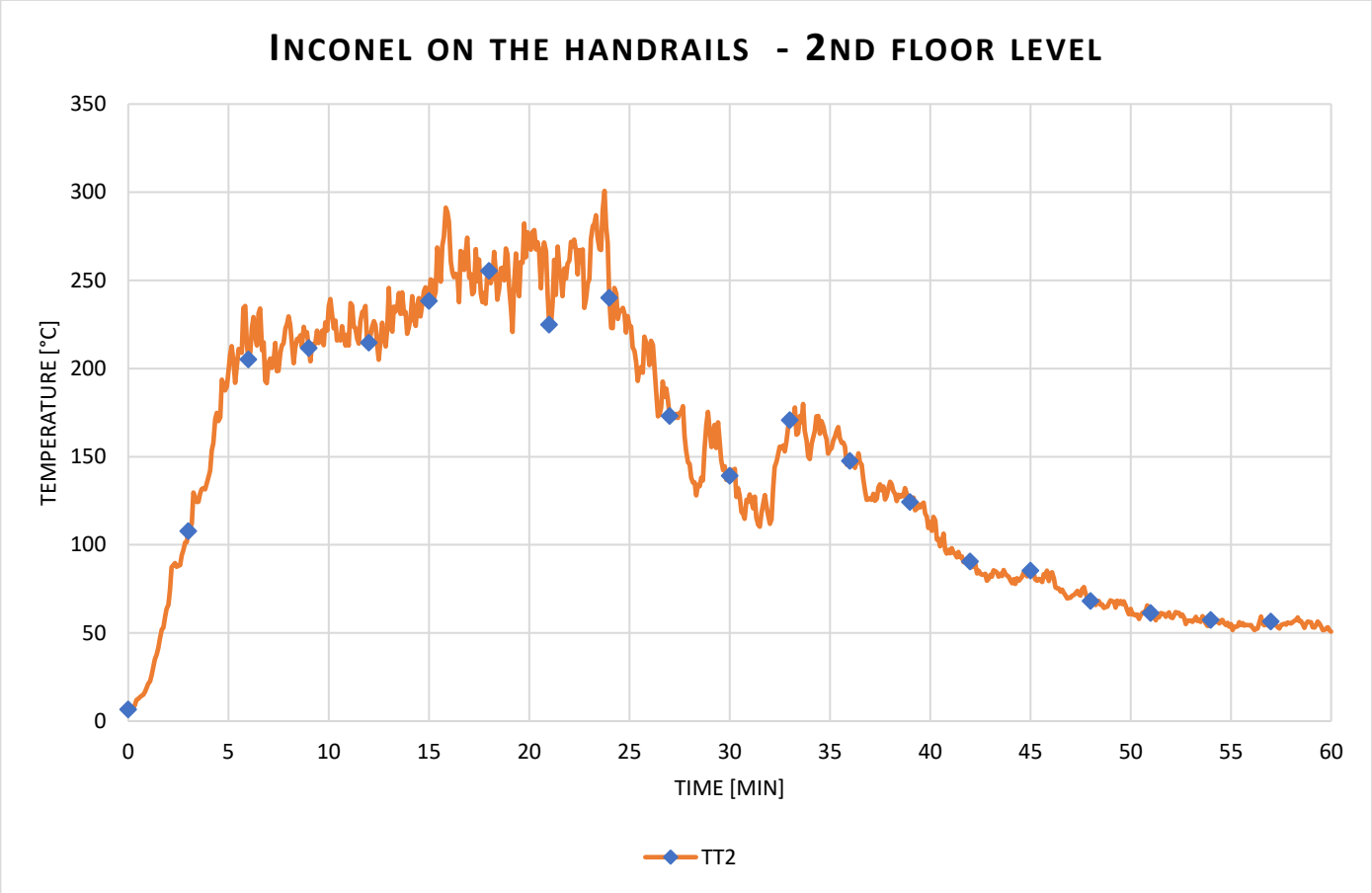

Radiant heat calculated from Plate TC

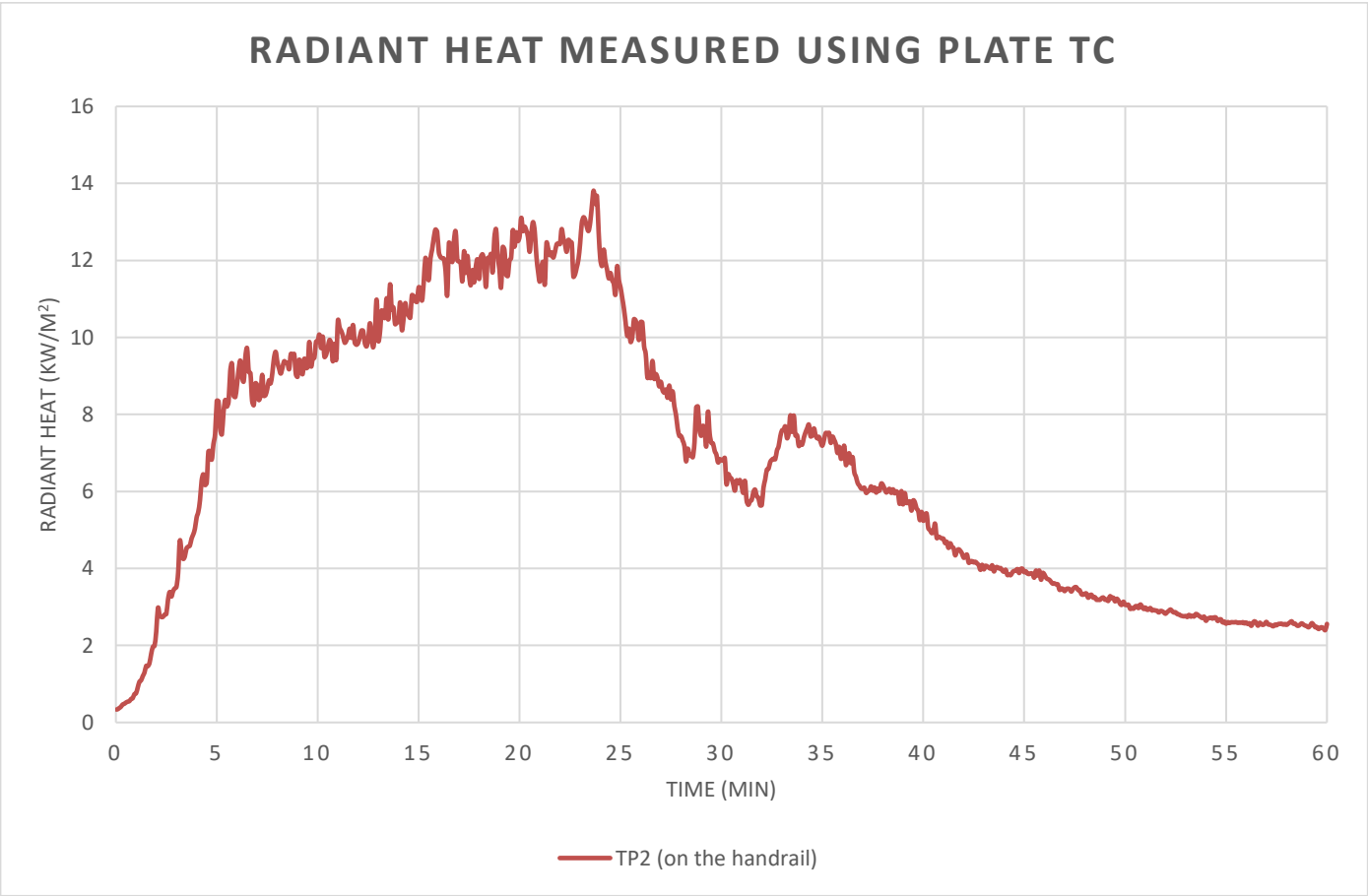

Data measurement from Ground floor sidewalls

Layout

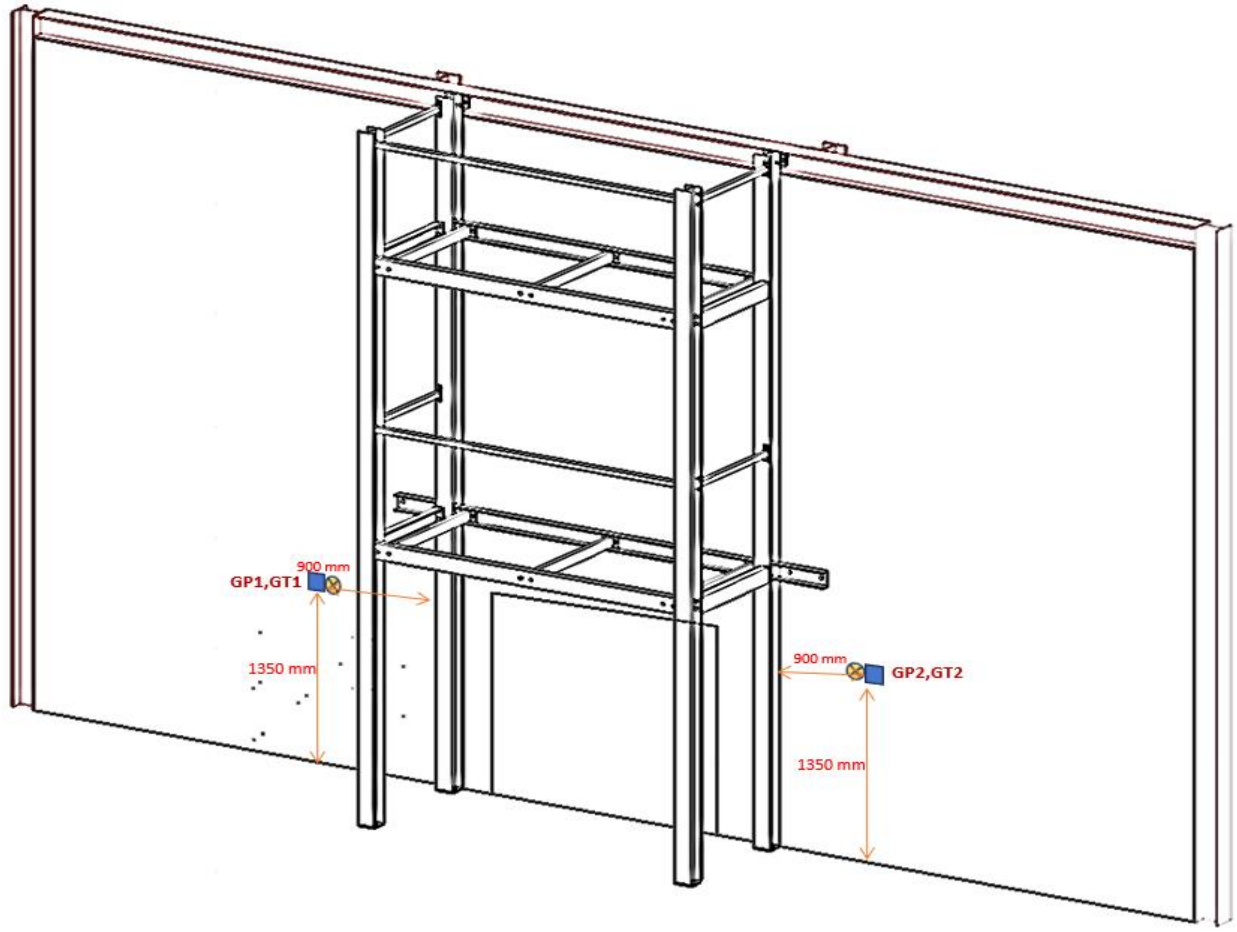

Temperature measured from the Plate TC's from Ground floor sidewalls

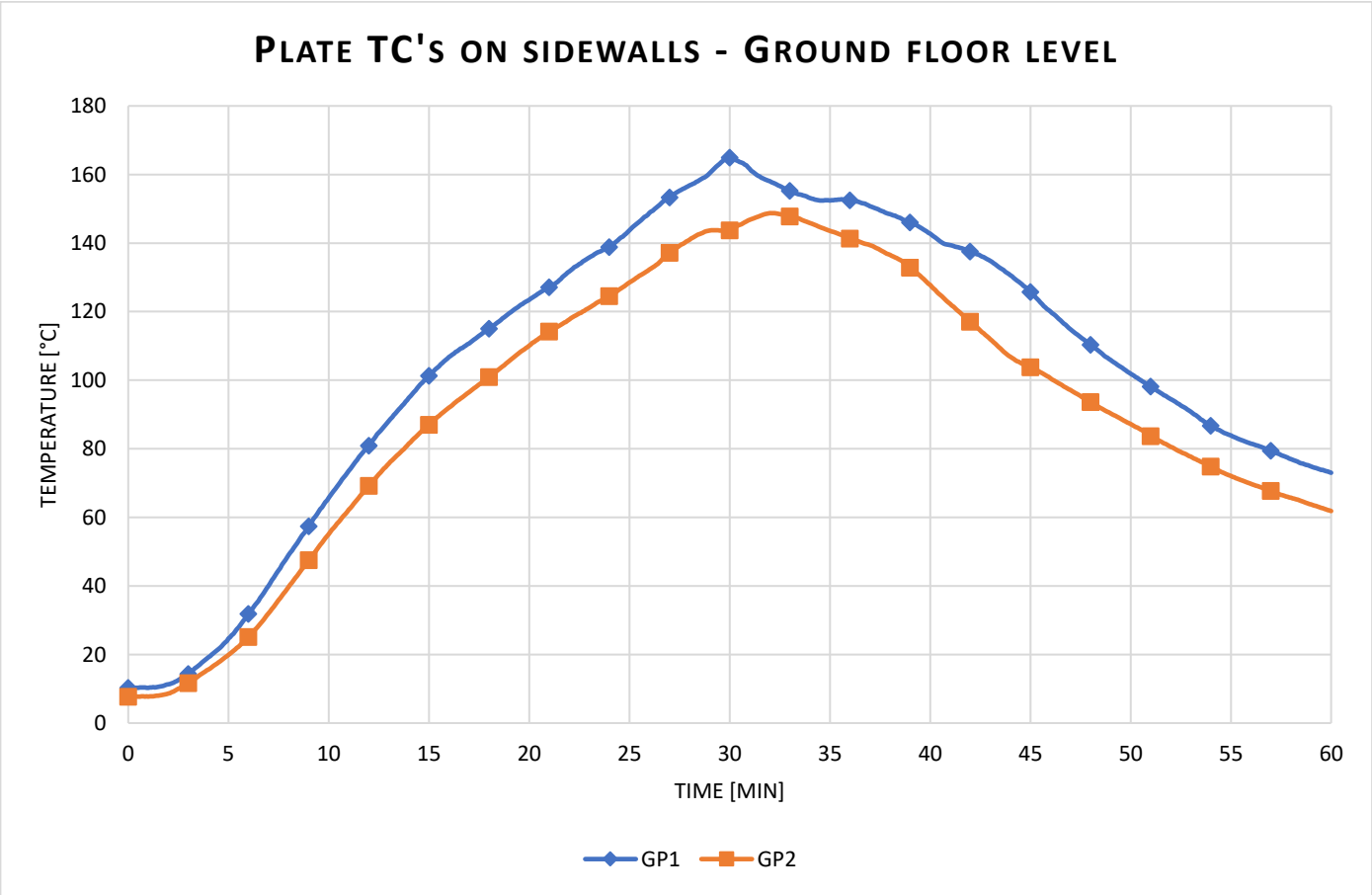

Temperature measured from the Inconel from 1st floor sidewall

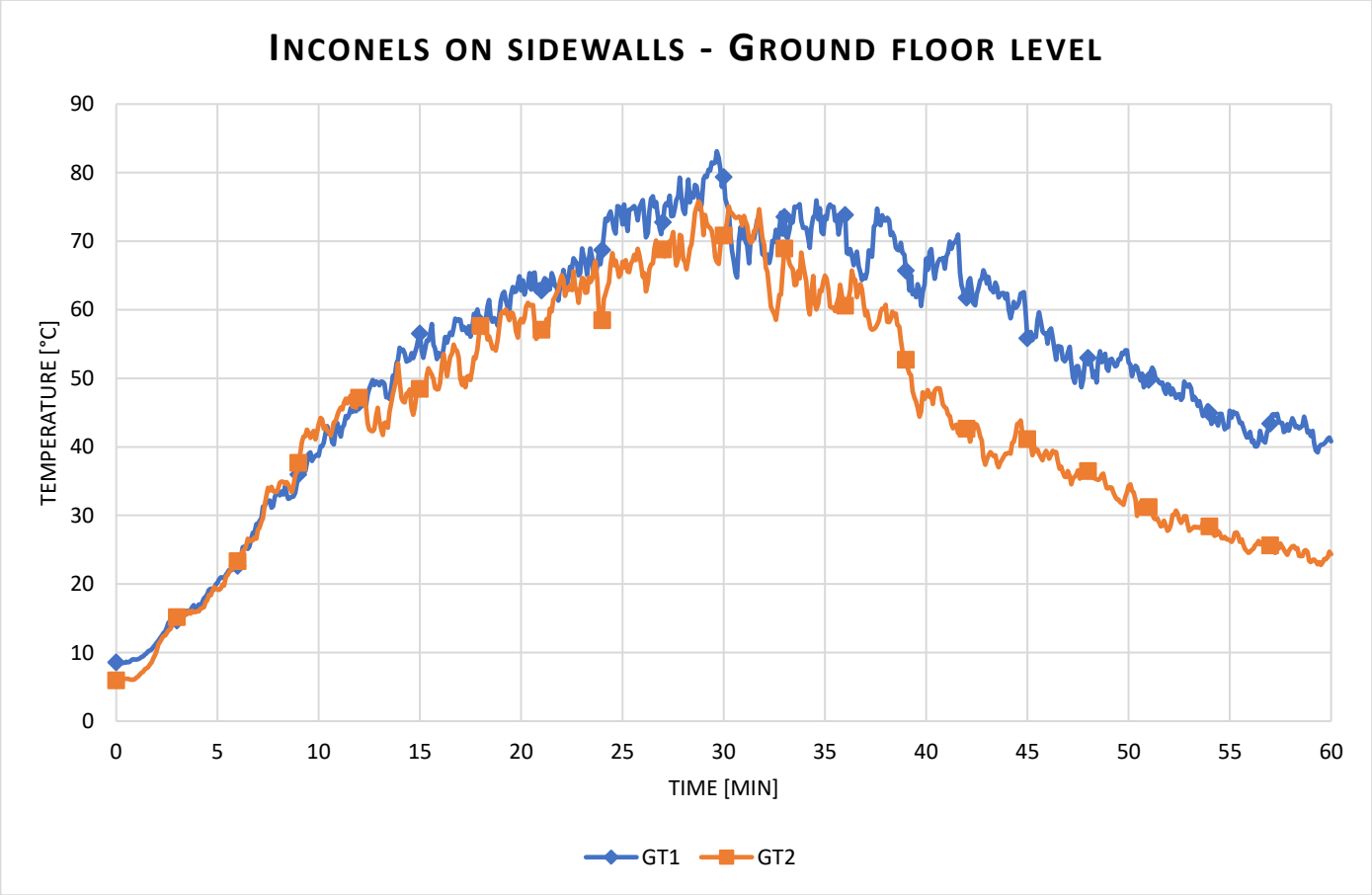

Radiant heat calculated from Plate TC's

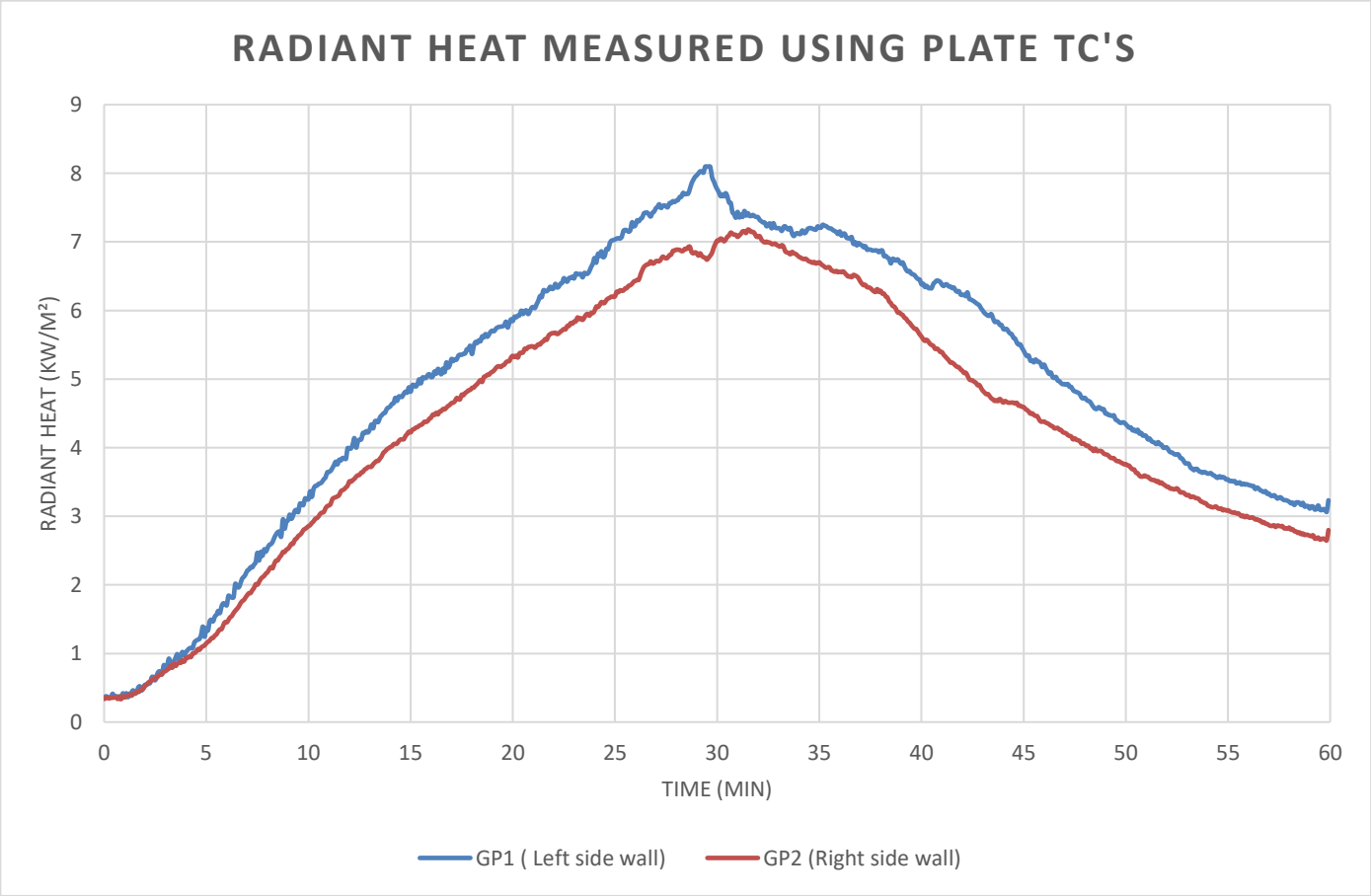

Data measurement from 1st floor sidewall

Layout

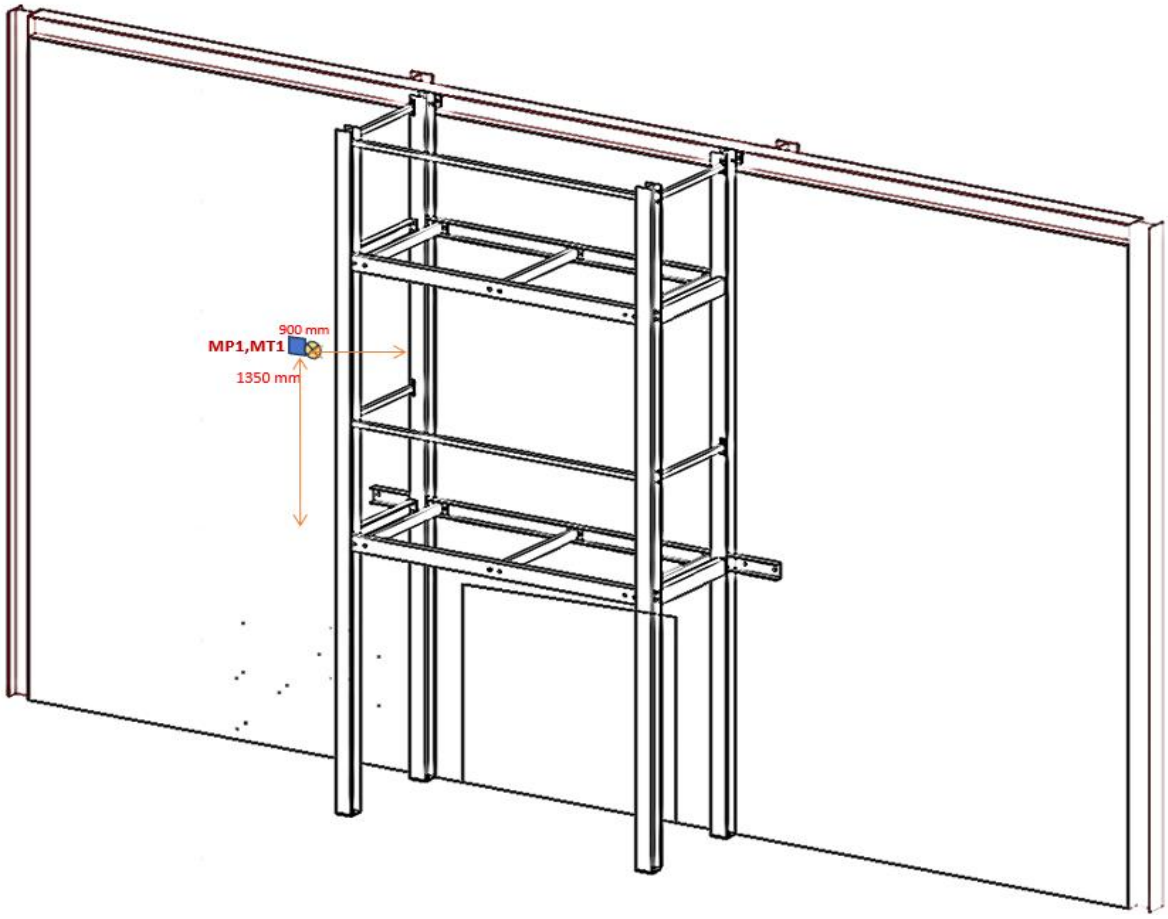

Temperature measured from the Plate TC from 1st floor sidewall

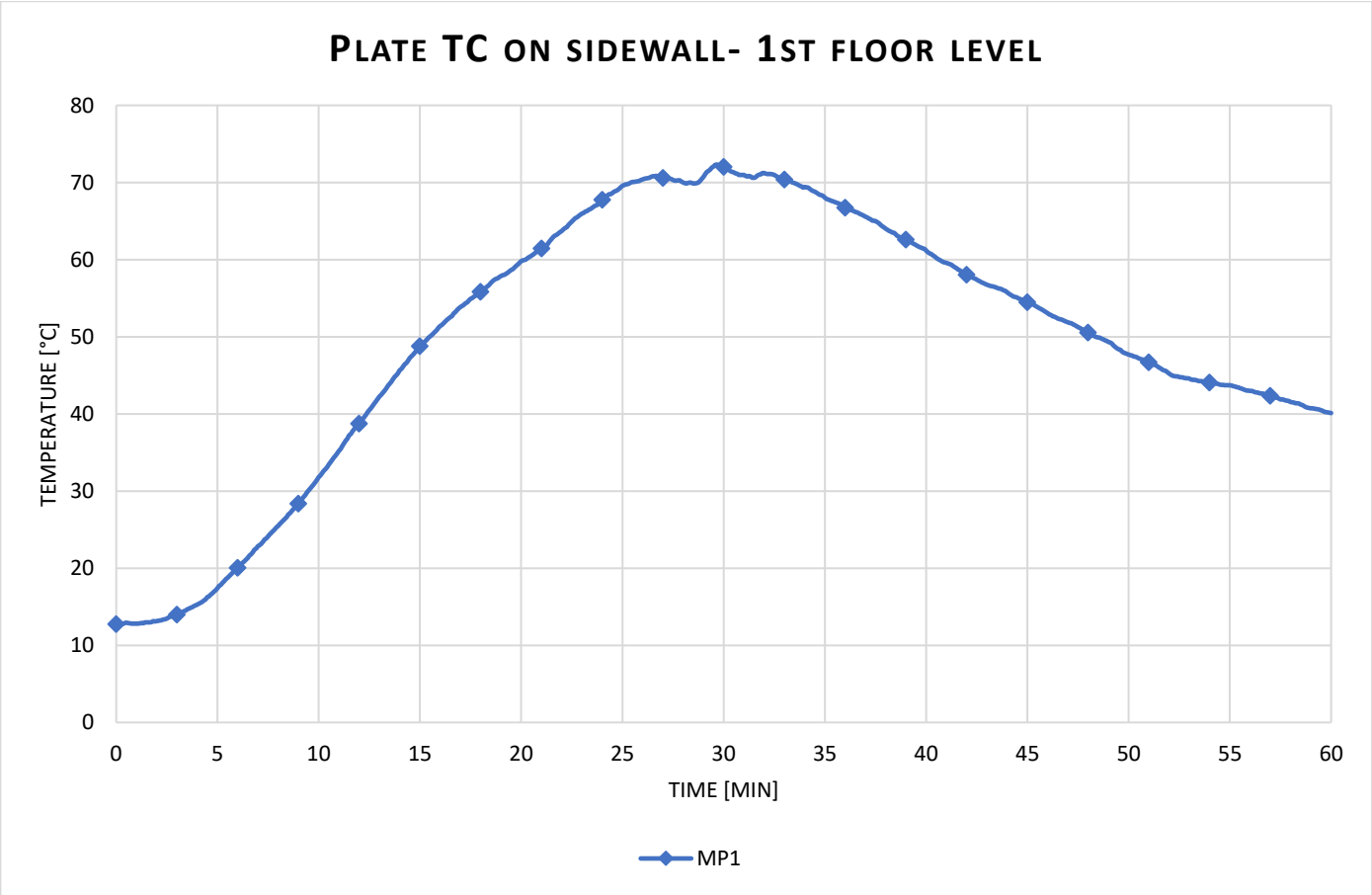

Temperature measured from the Inconel from 1st floor sidewall

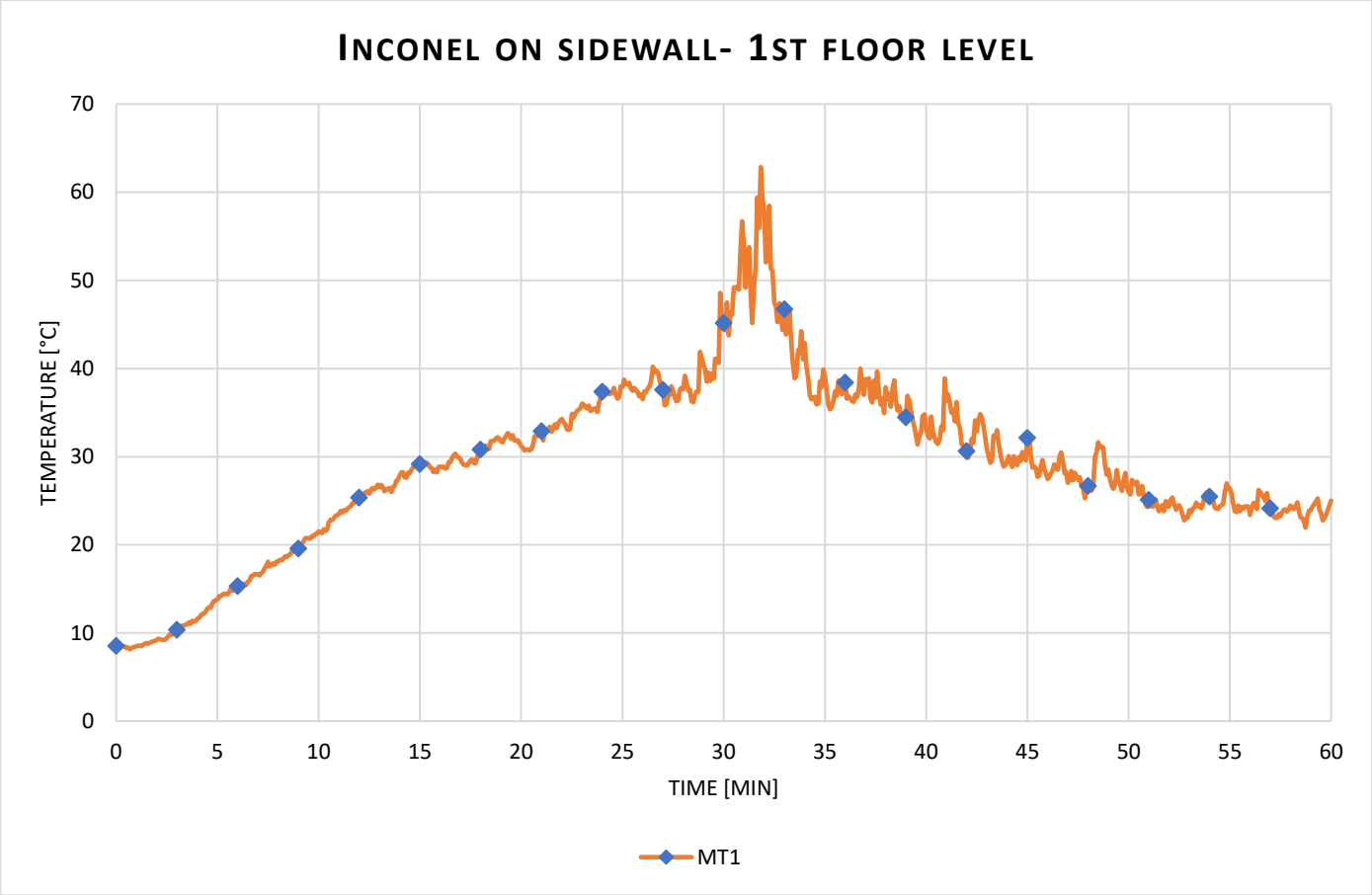

Radiant heat calculated from Plate TC

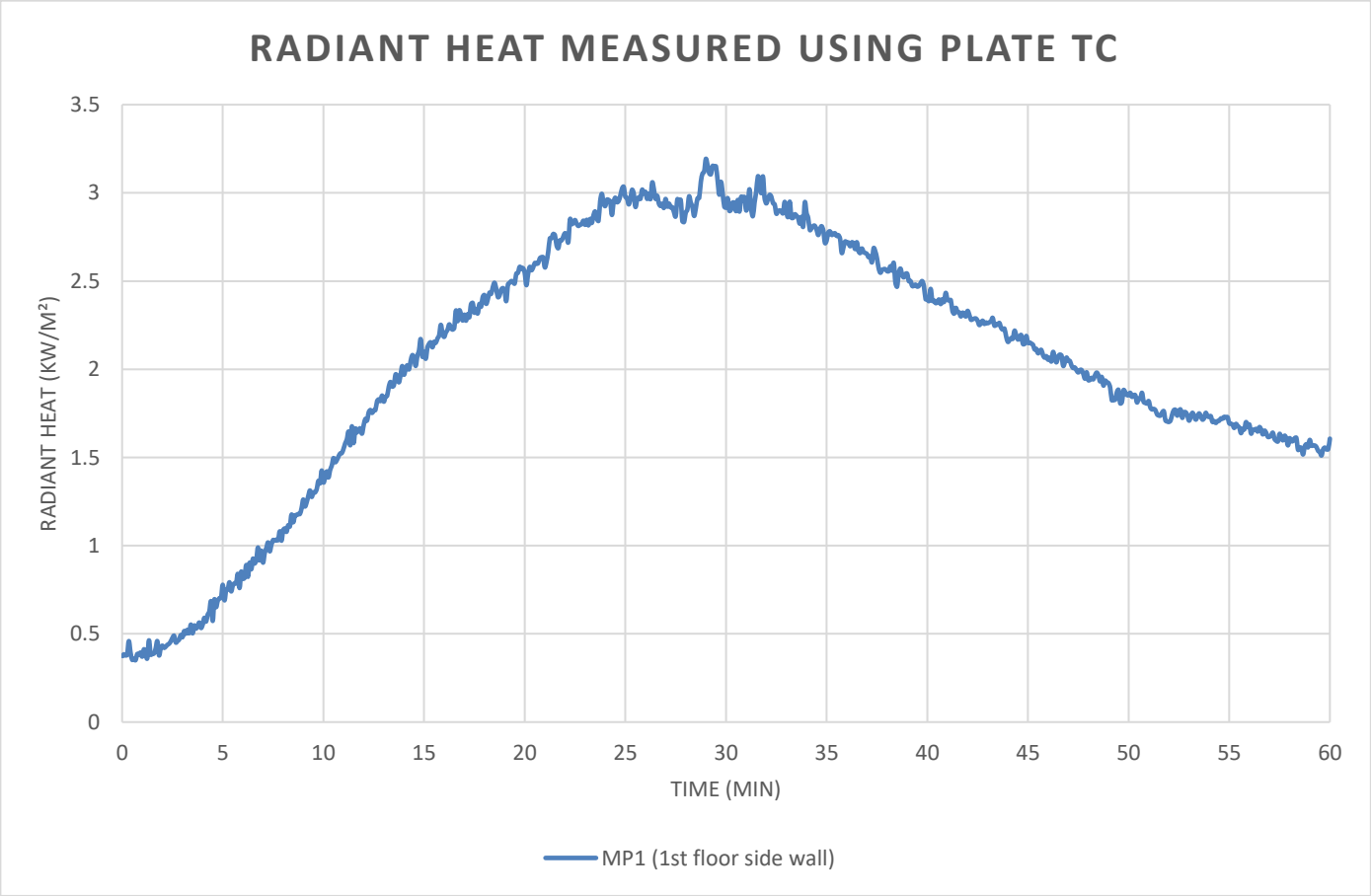

Data measurement from 2nd floor sidewall

Layout

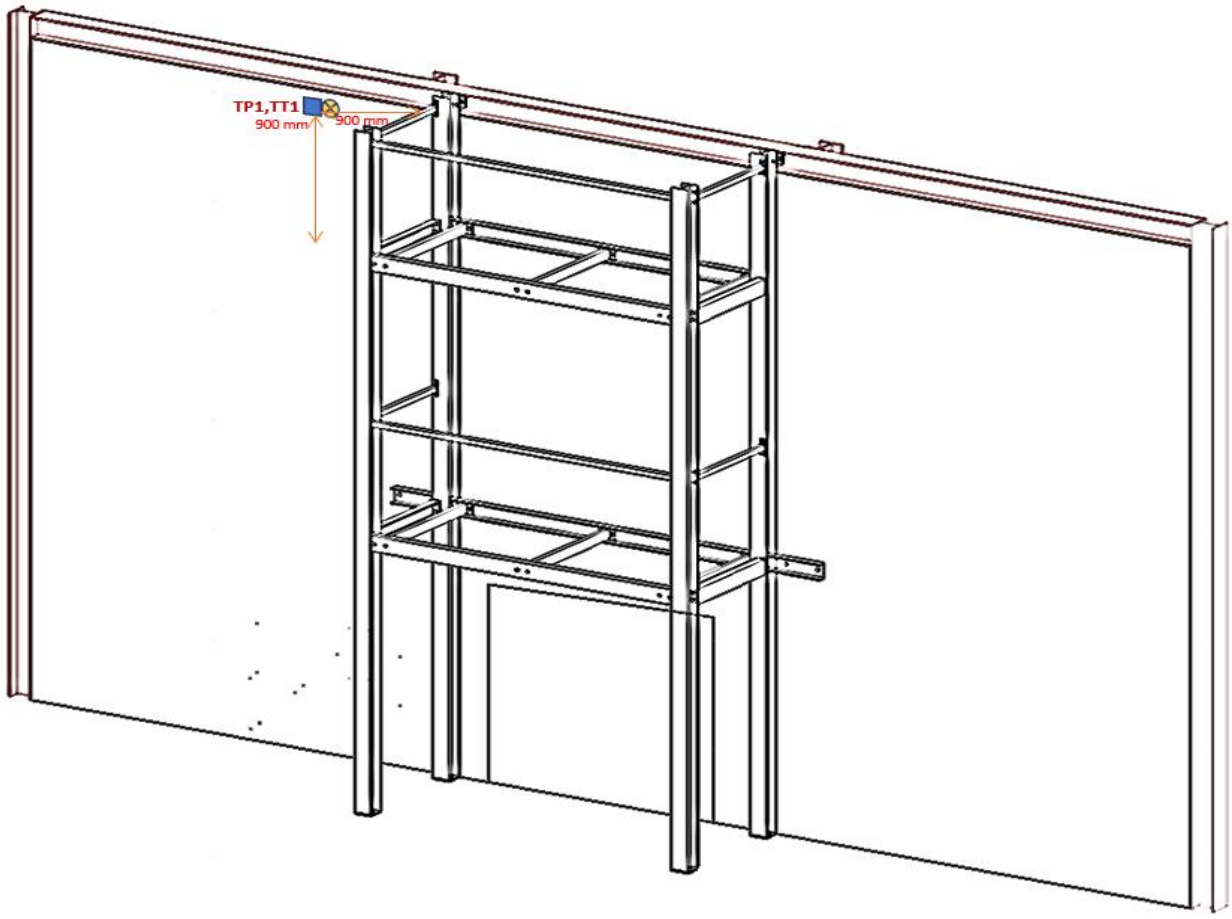

Temperature measured from the Plate TC from 2nd floor sidewall

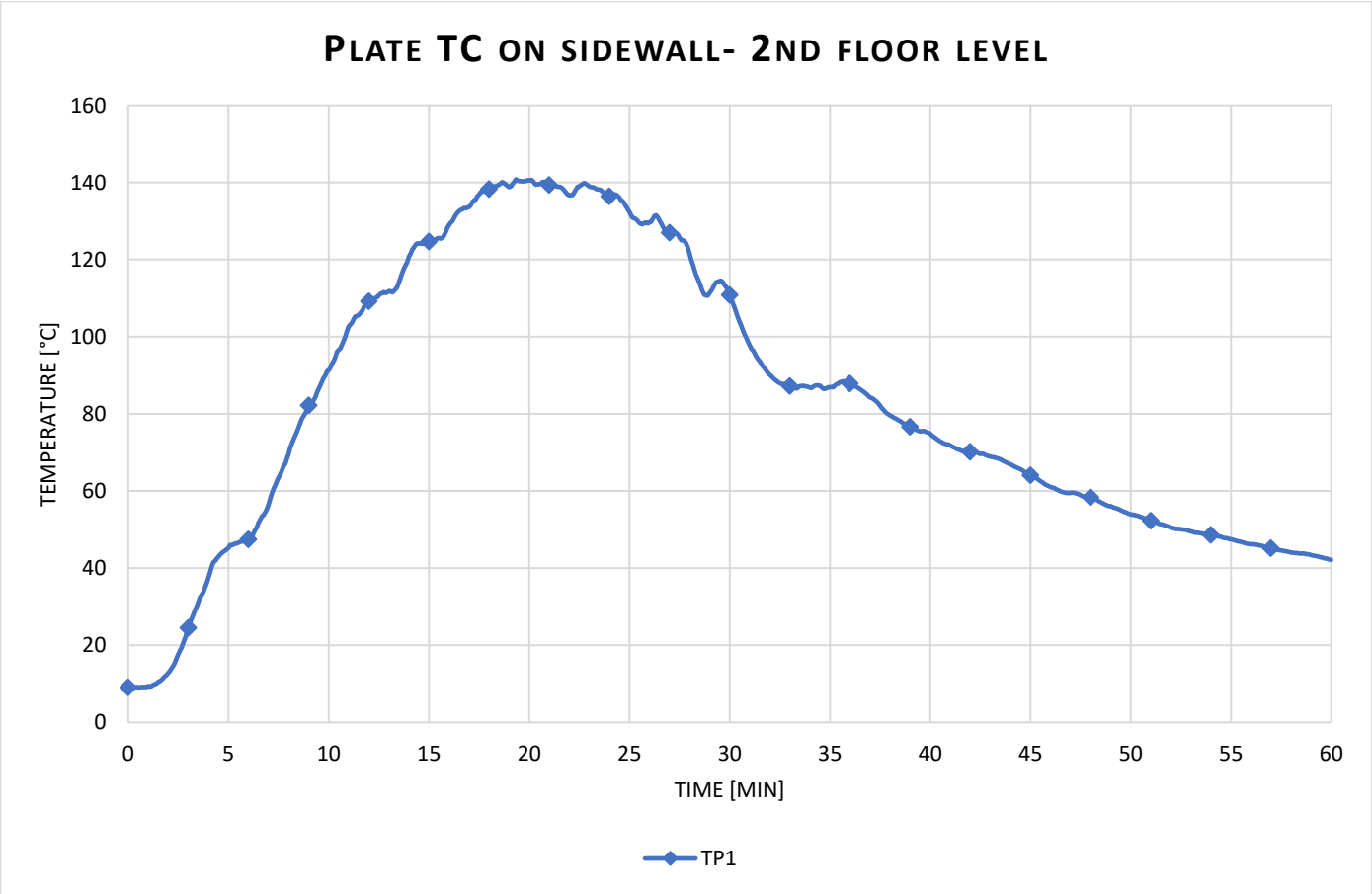

Temperature measured from the Inconel from 2nd floor sidewall

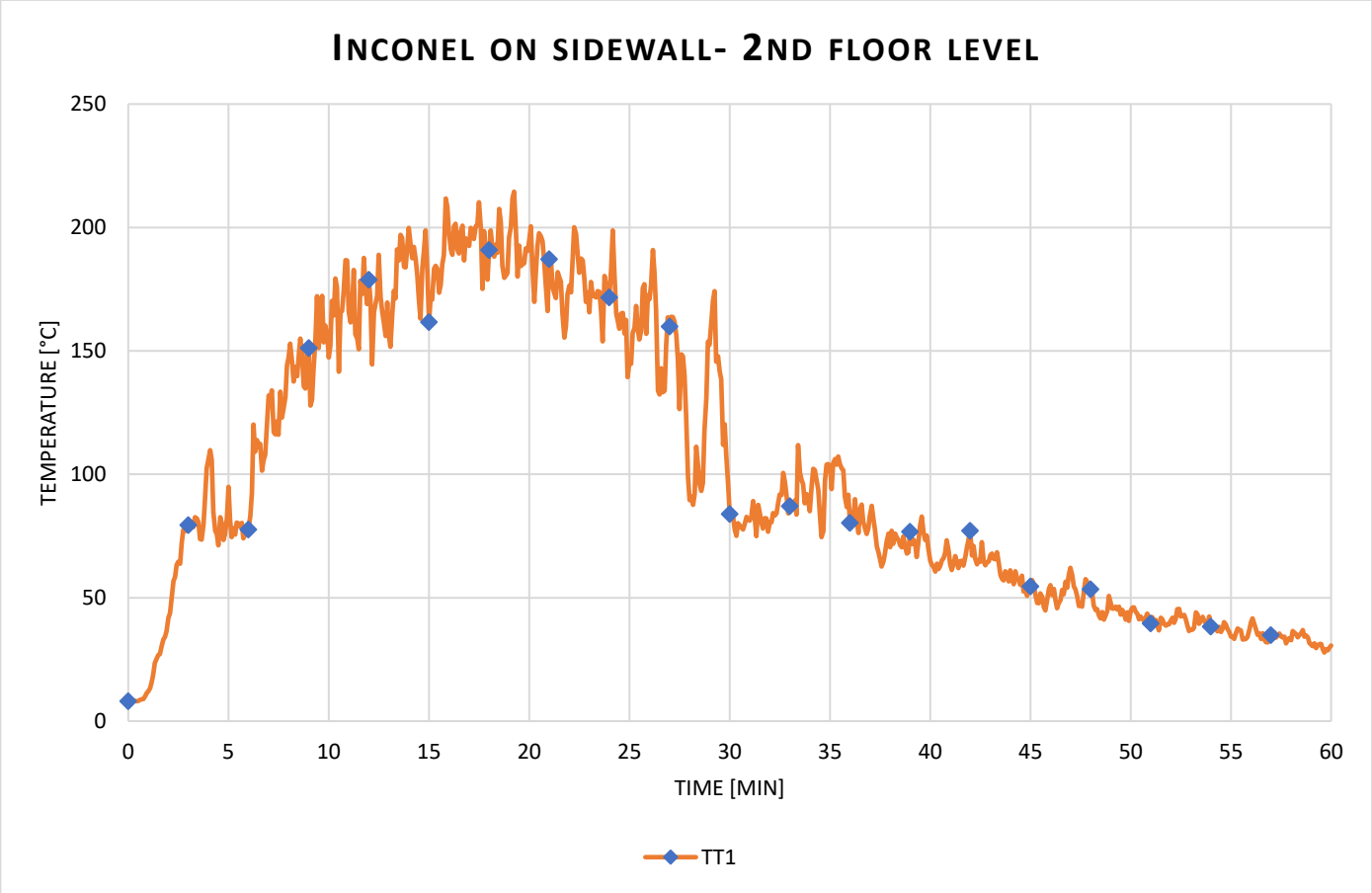

Radiant heat calculated from Plate TC

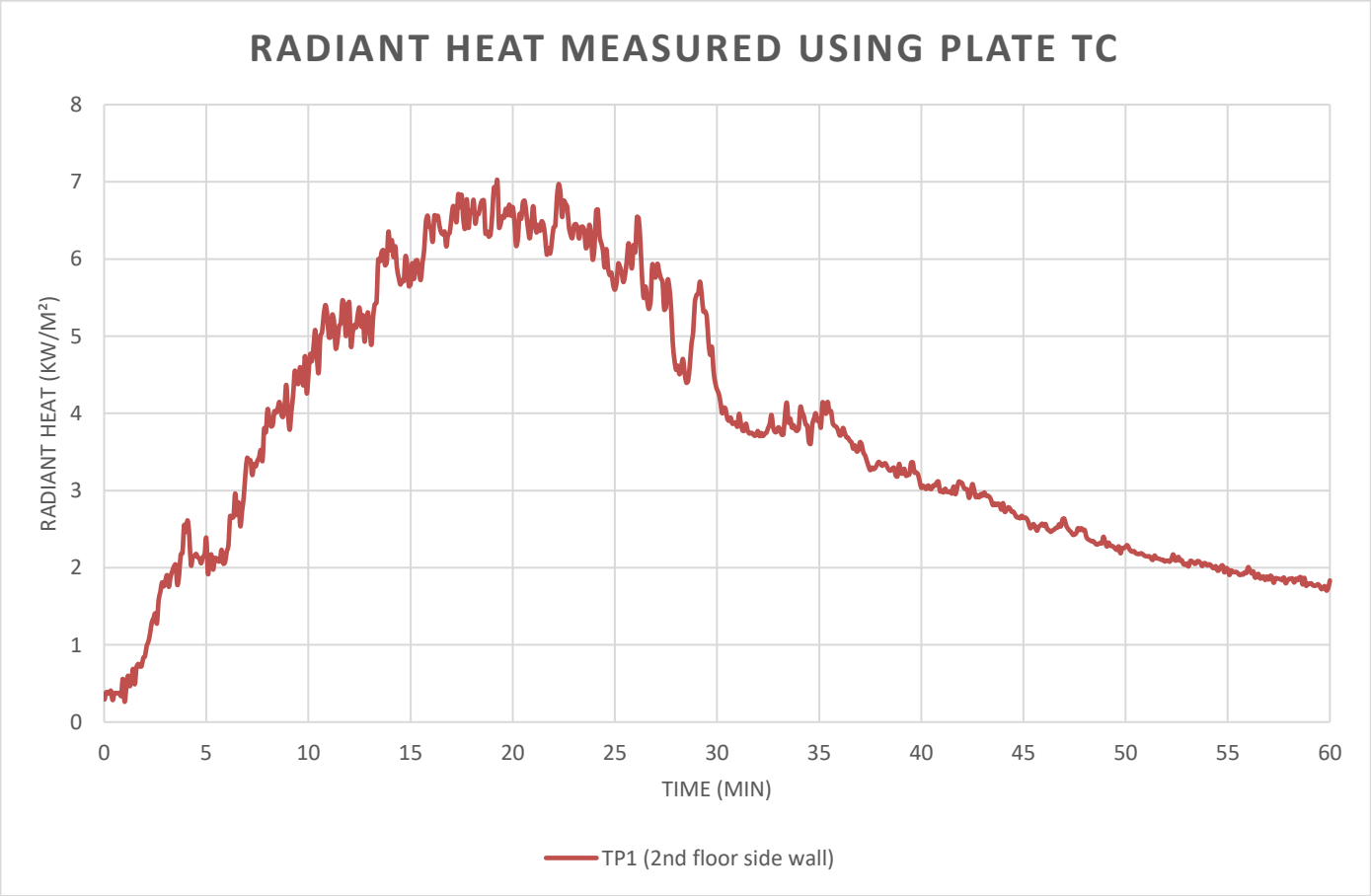

Data measurement from the steel C-section underneath 1st floor

Layout

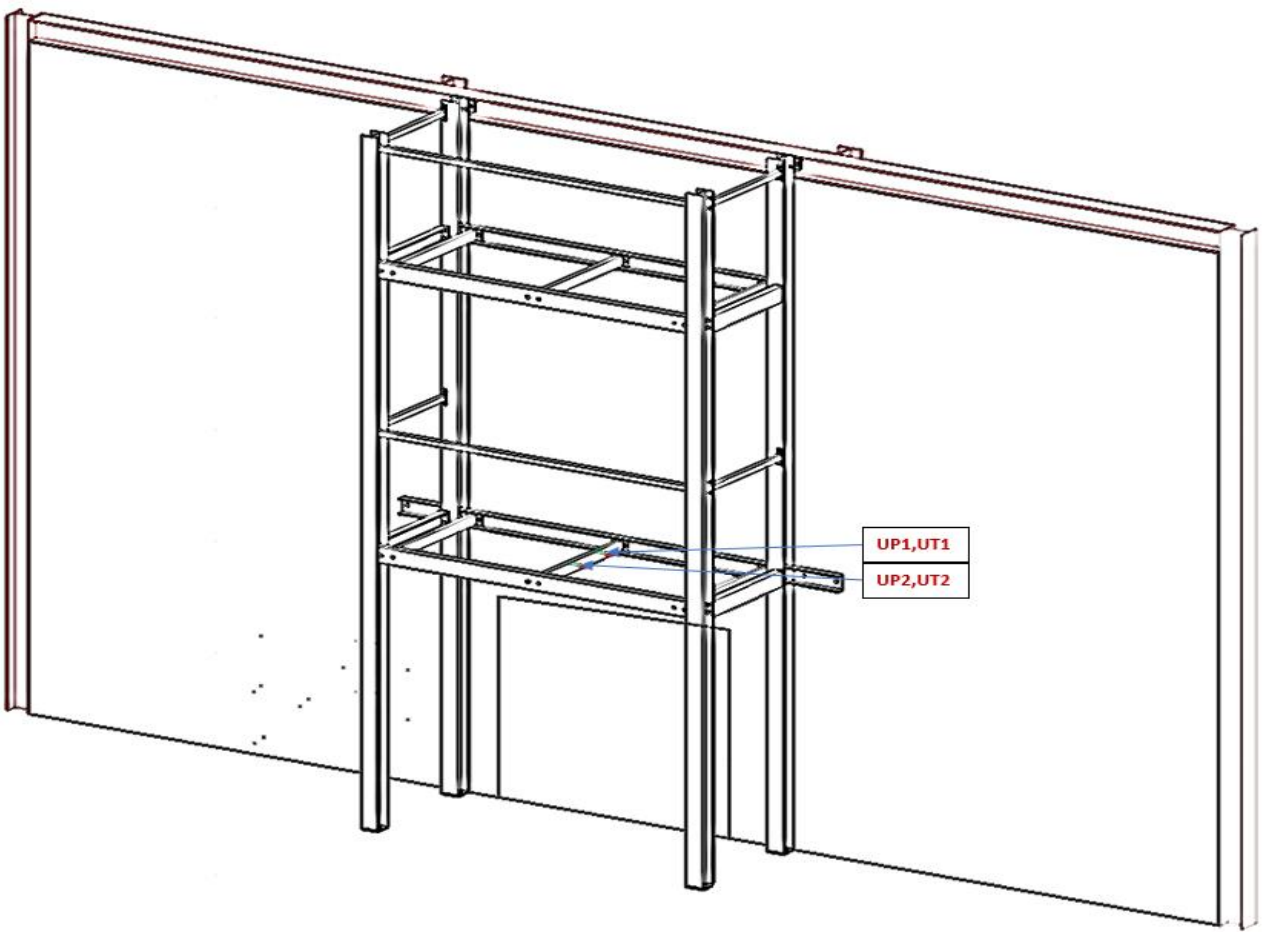

Temperature measured from the Plate TC's on the steel C-section underneath 1st floor

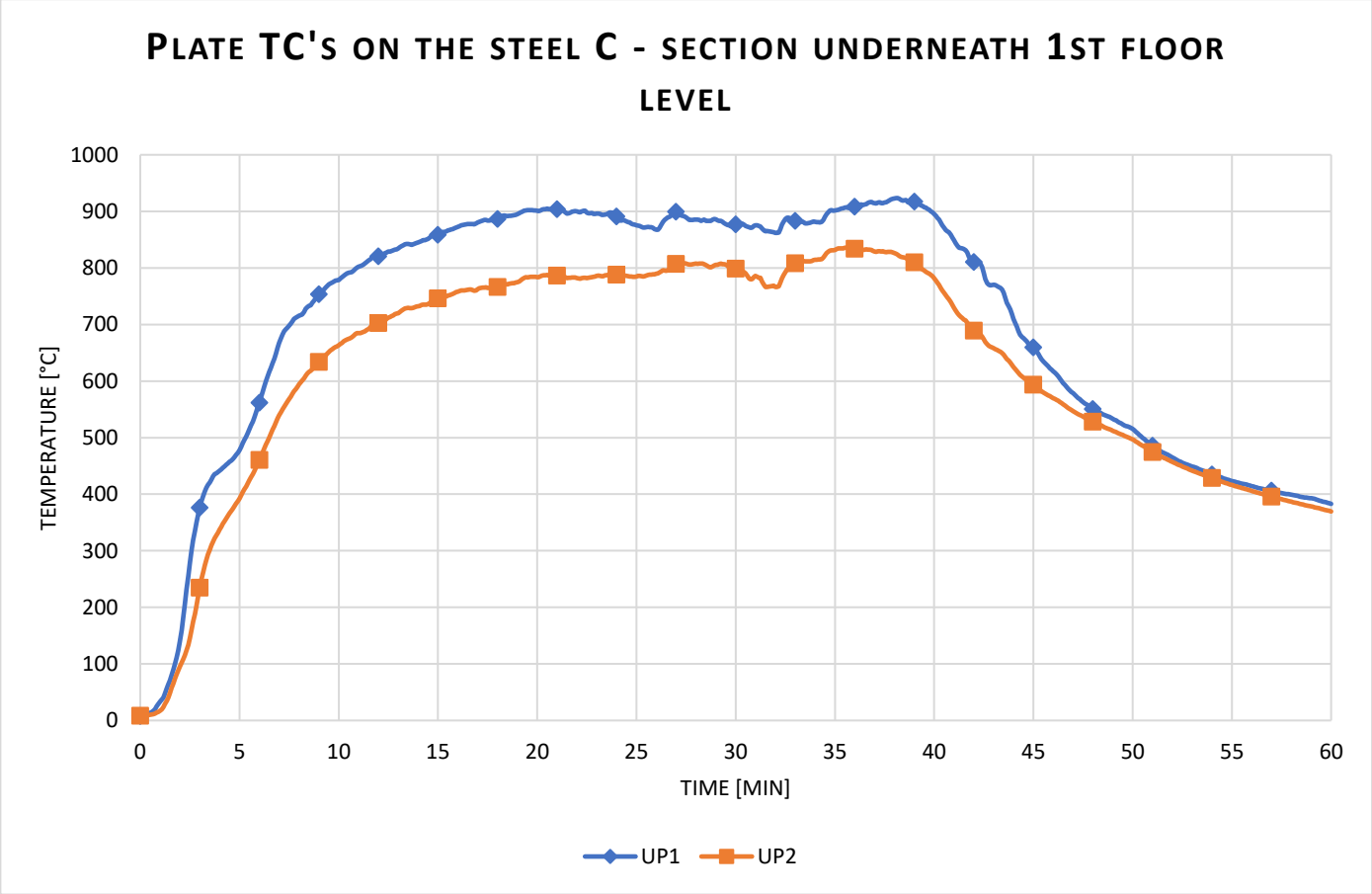

Temperature measured from the Inconels on the steel C-section underneath 1st floor

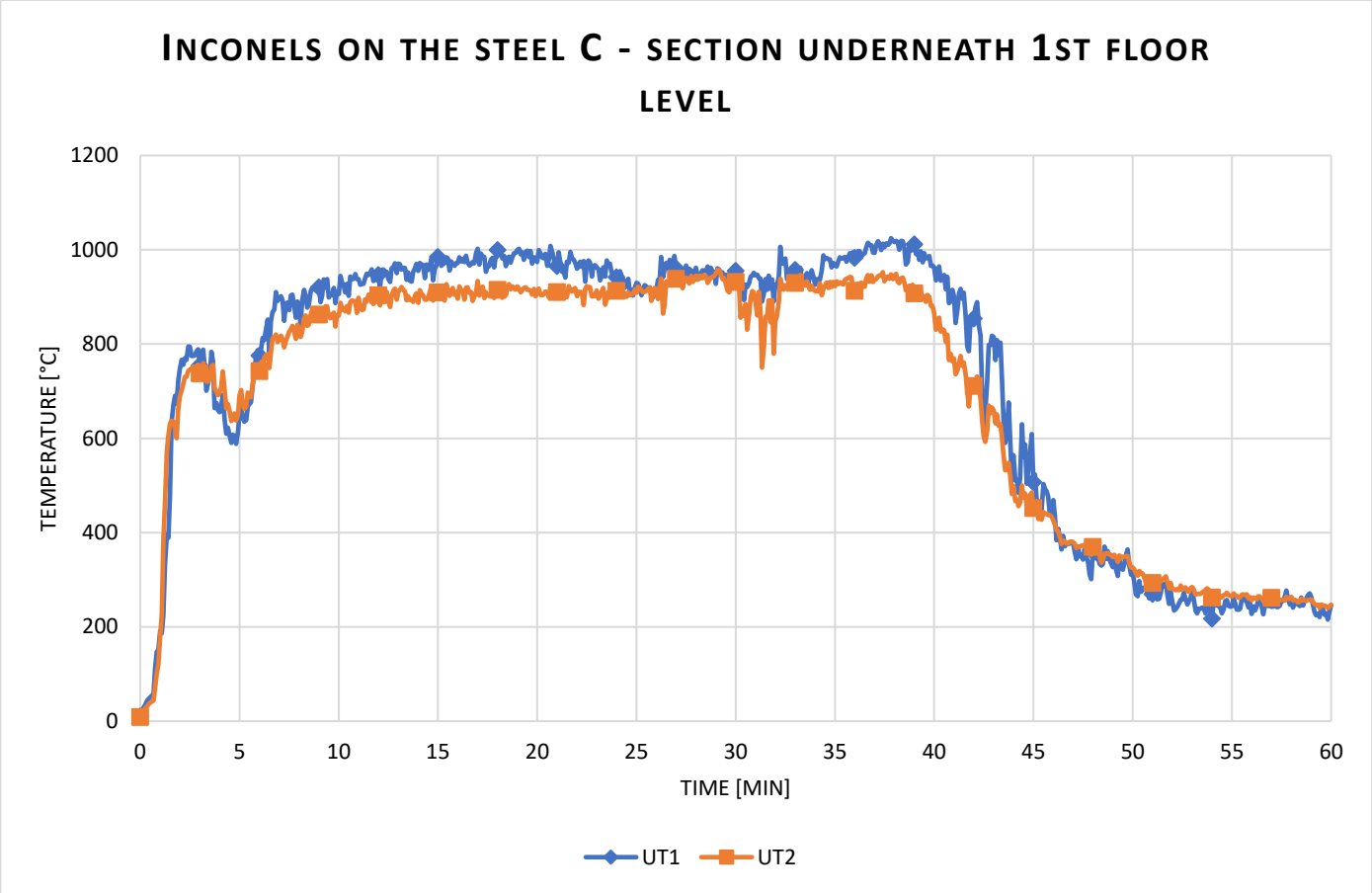

Radiant heat calculated from Plate TC

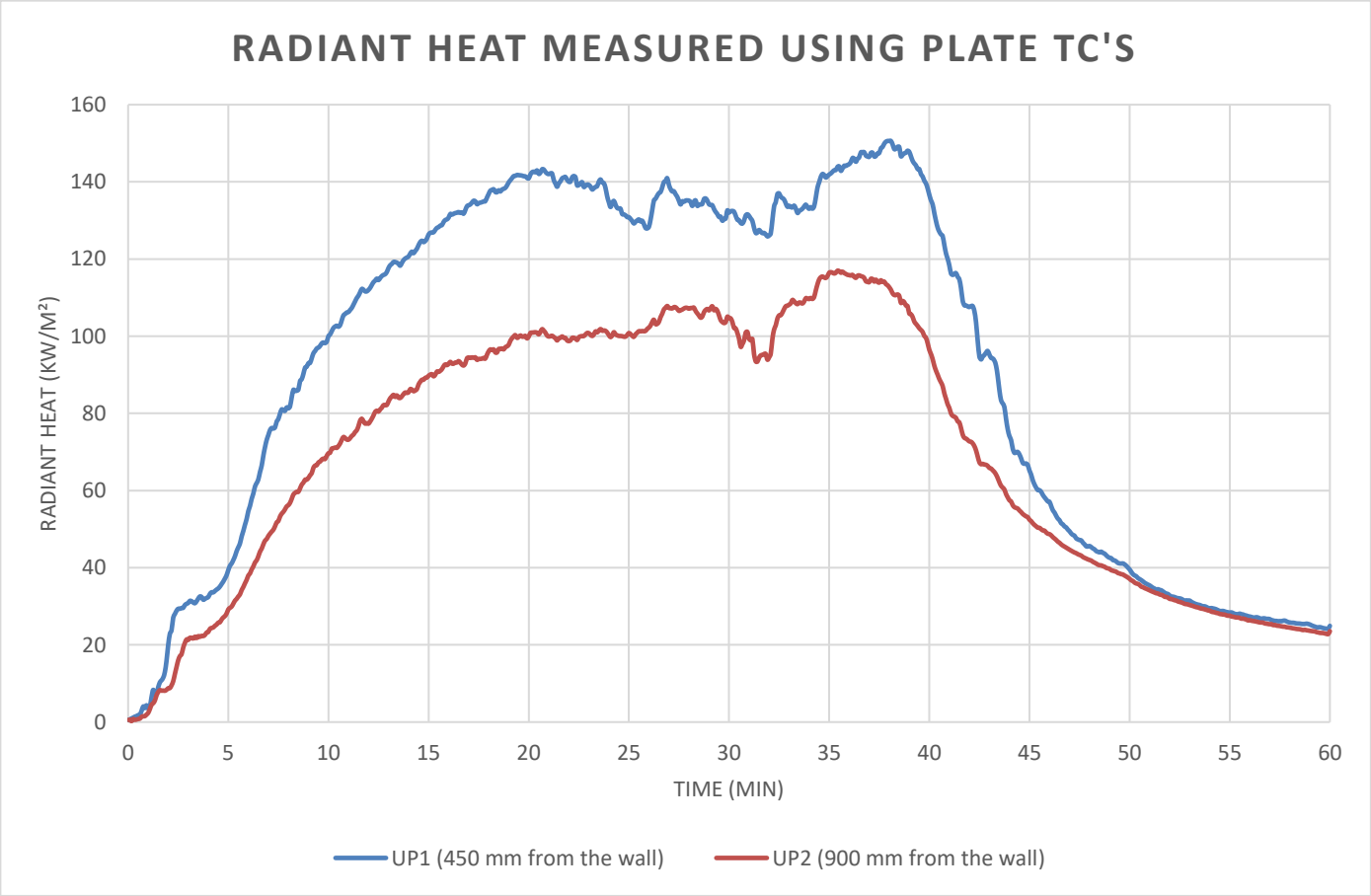

Data measurement from the steel C-section underneath 2nd floor

Layout

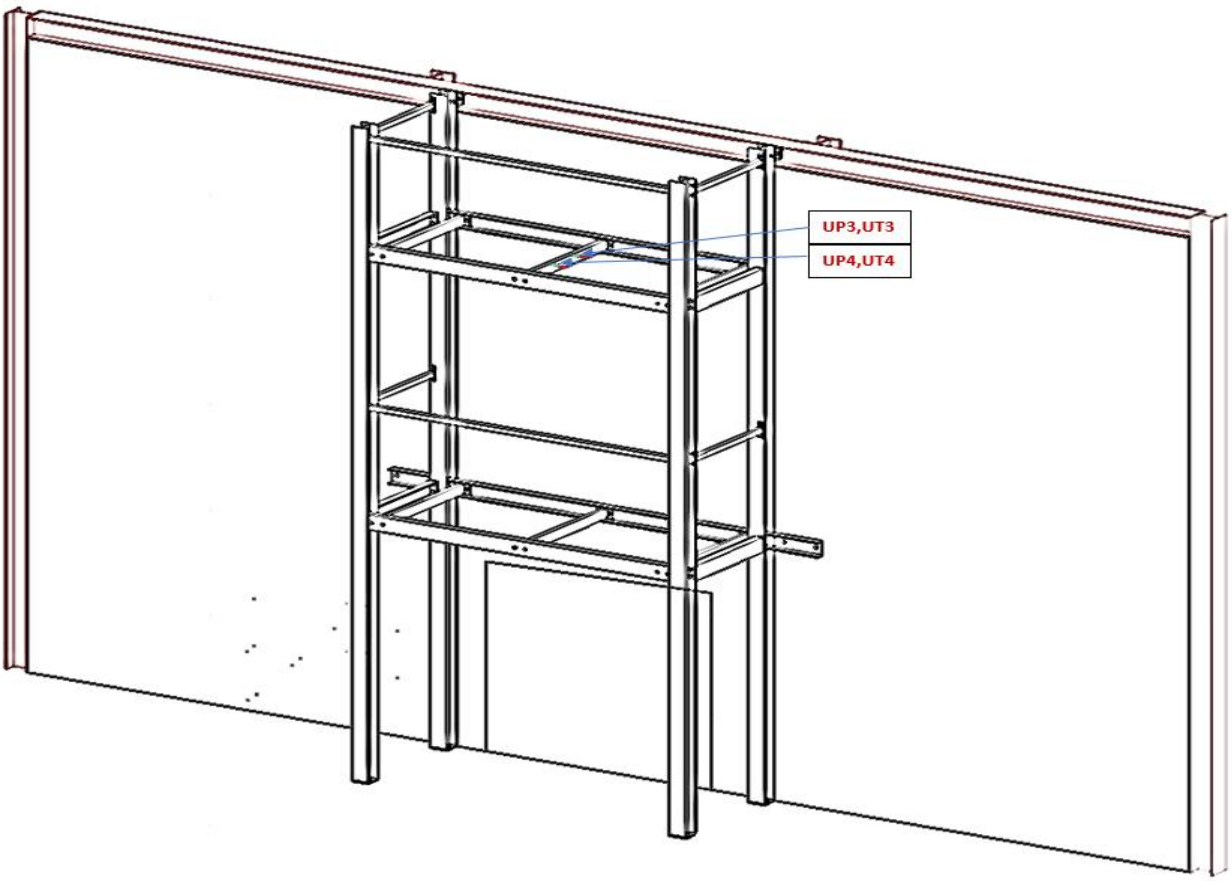

Temperature measured from the Plate TC's on the steel C-section underneath 2nd floor

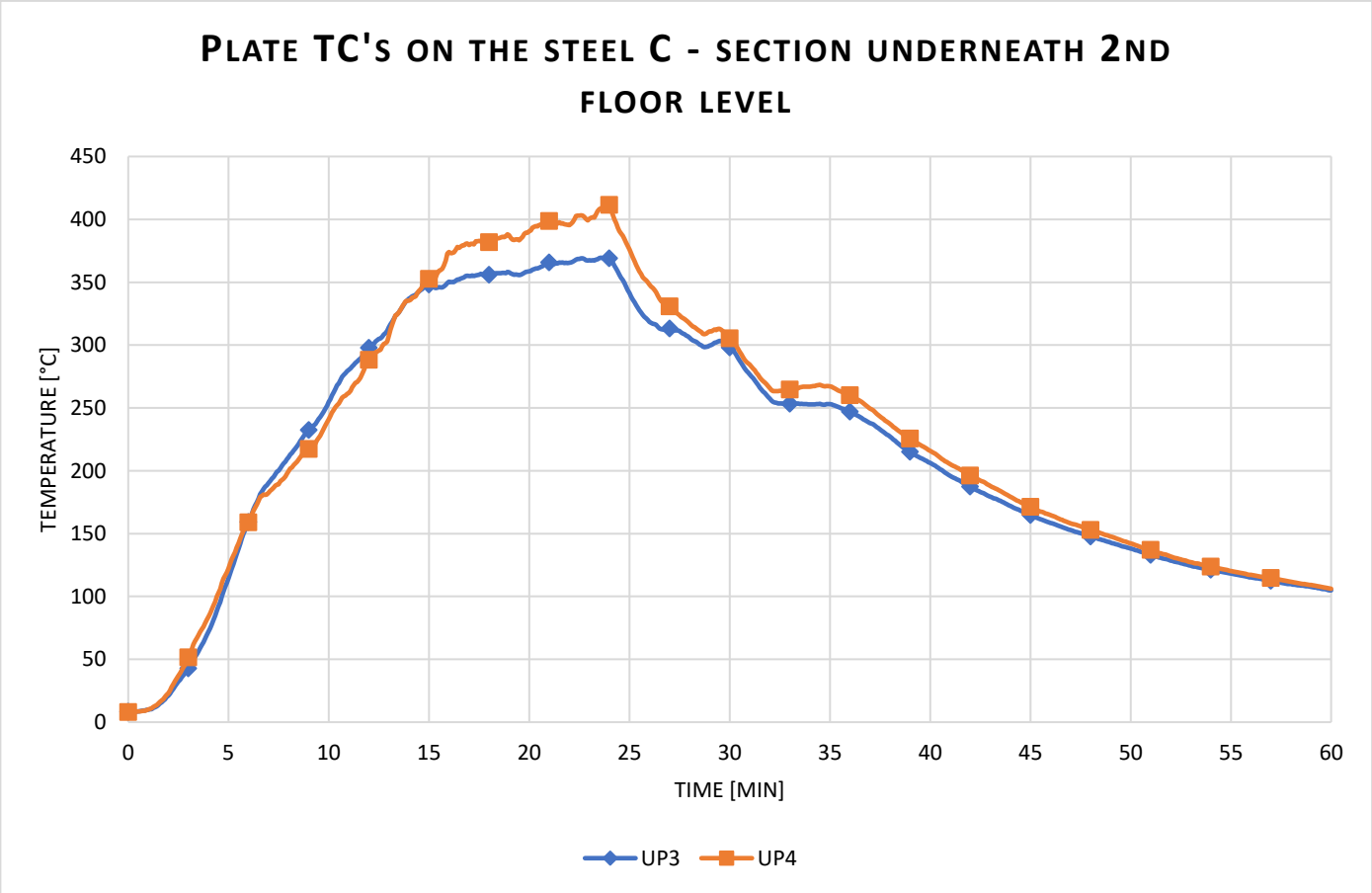

Temperature measured from the Inconels on the steel C-section underneath 2nd floor

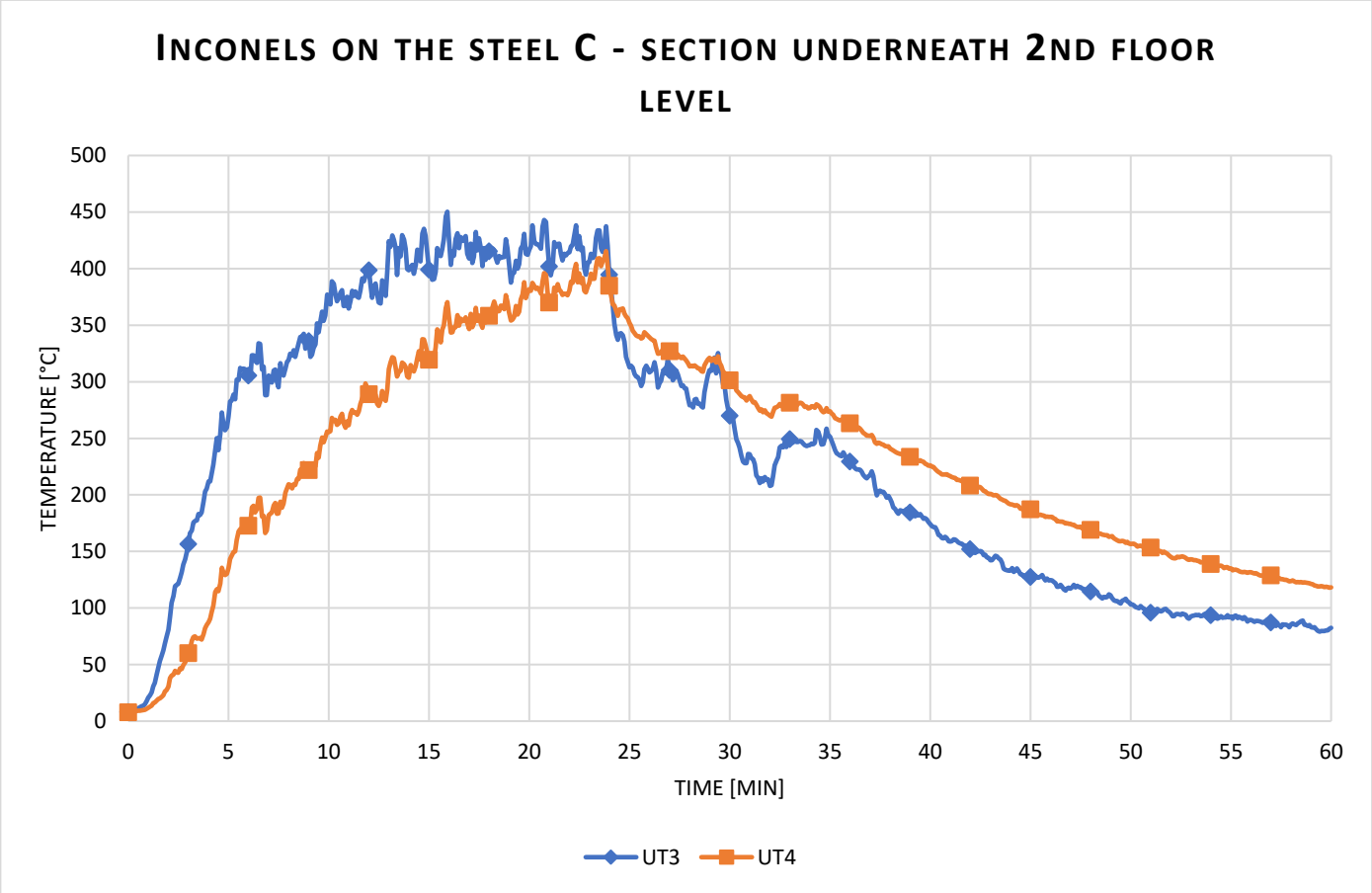

Radiant heat calculated from Plate TC's

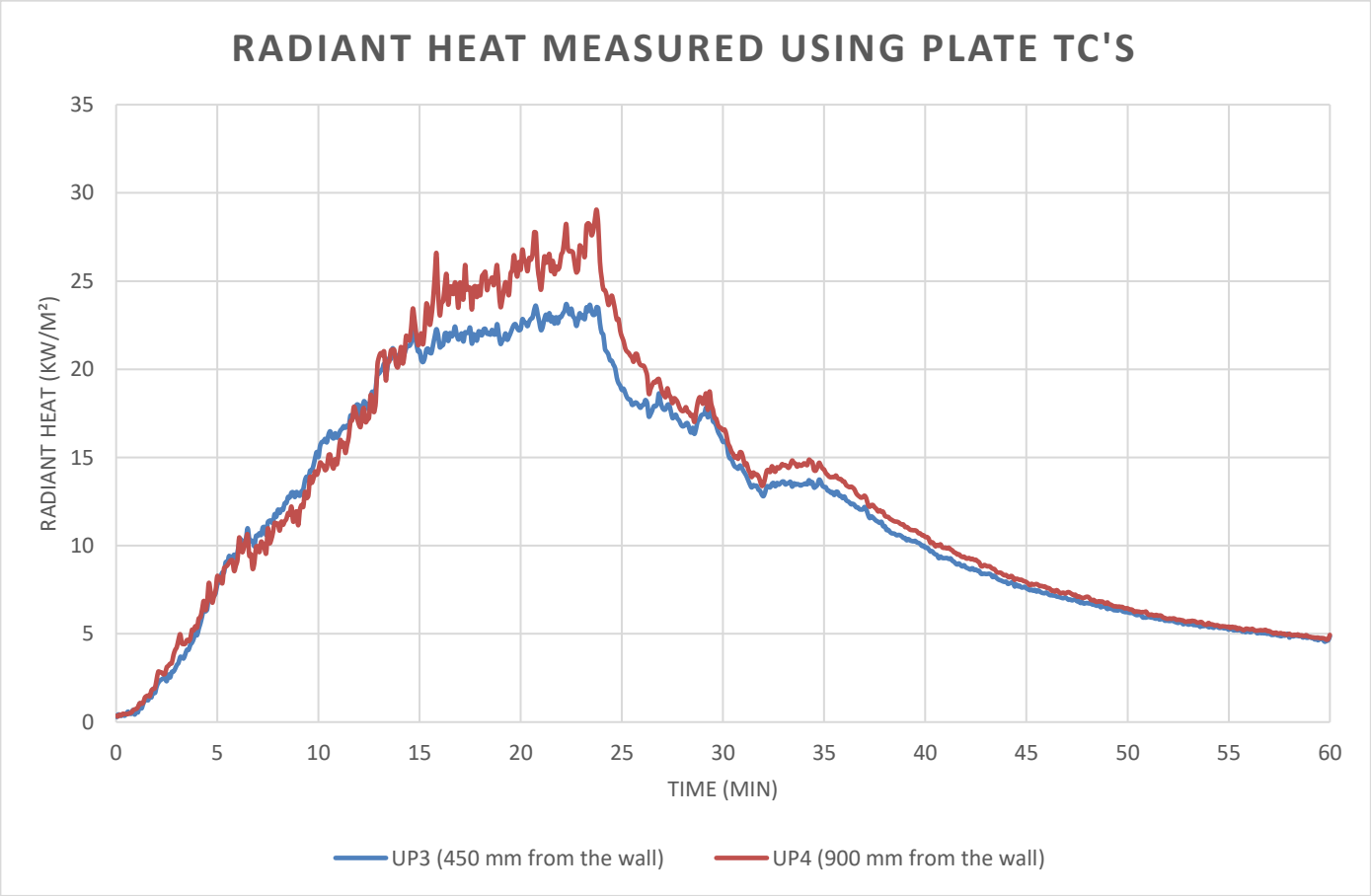

Data measurements from Inconels on side wall

Layout

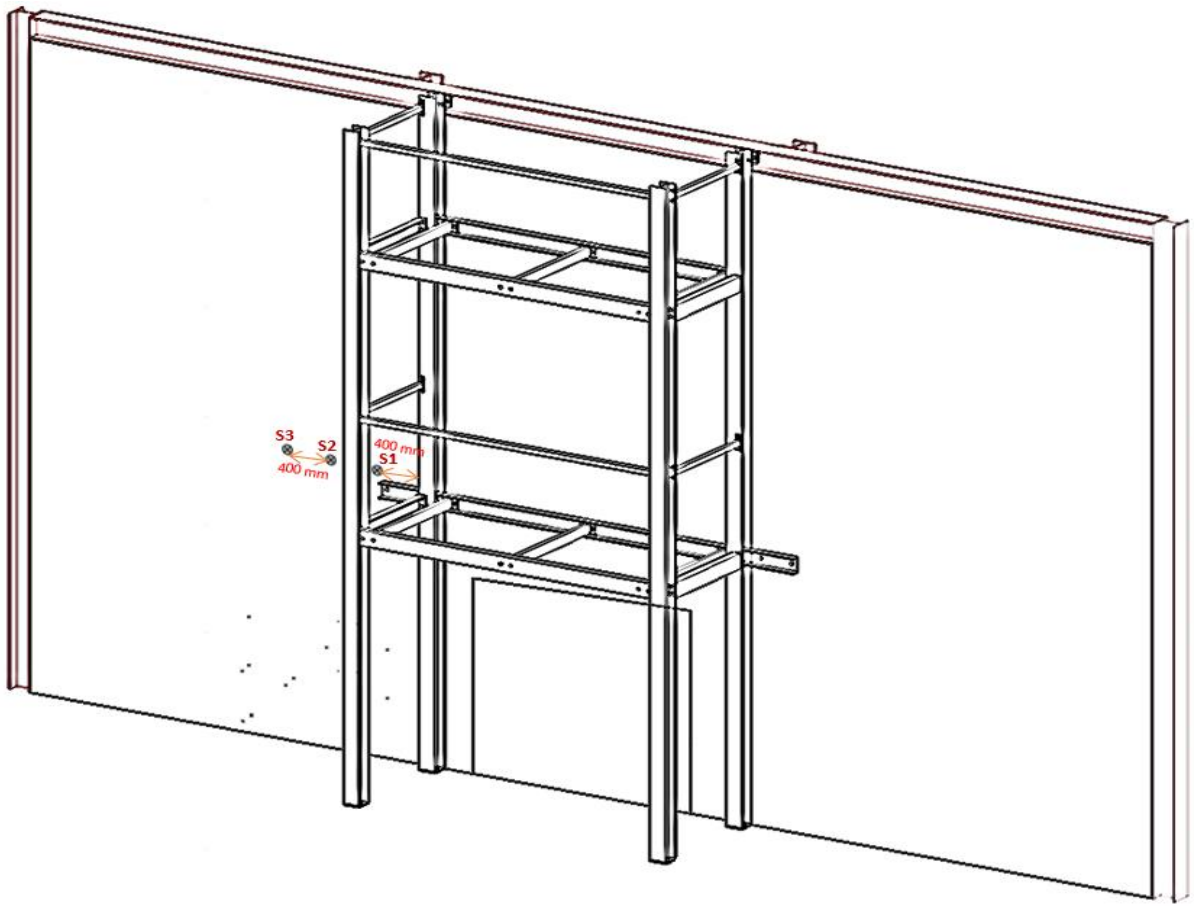

Temperature measured from the Inconels from the side wall – adjacent 1st floor level steel frame

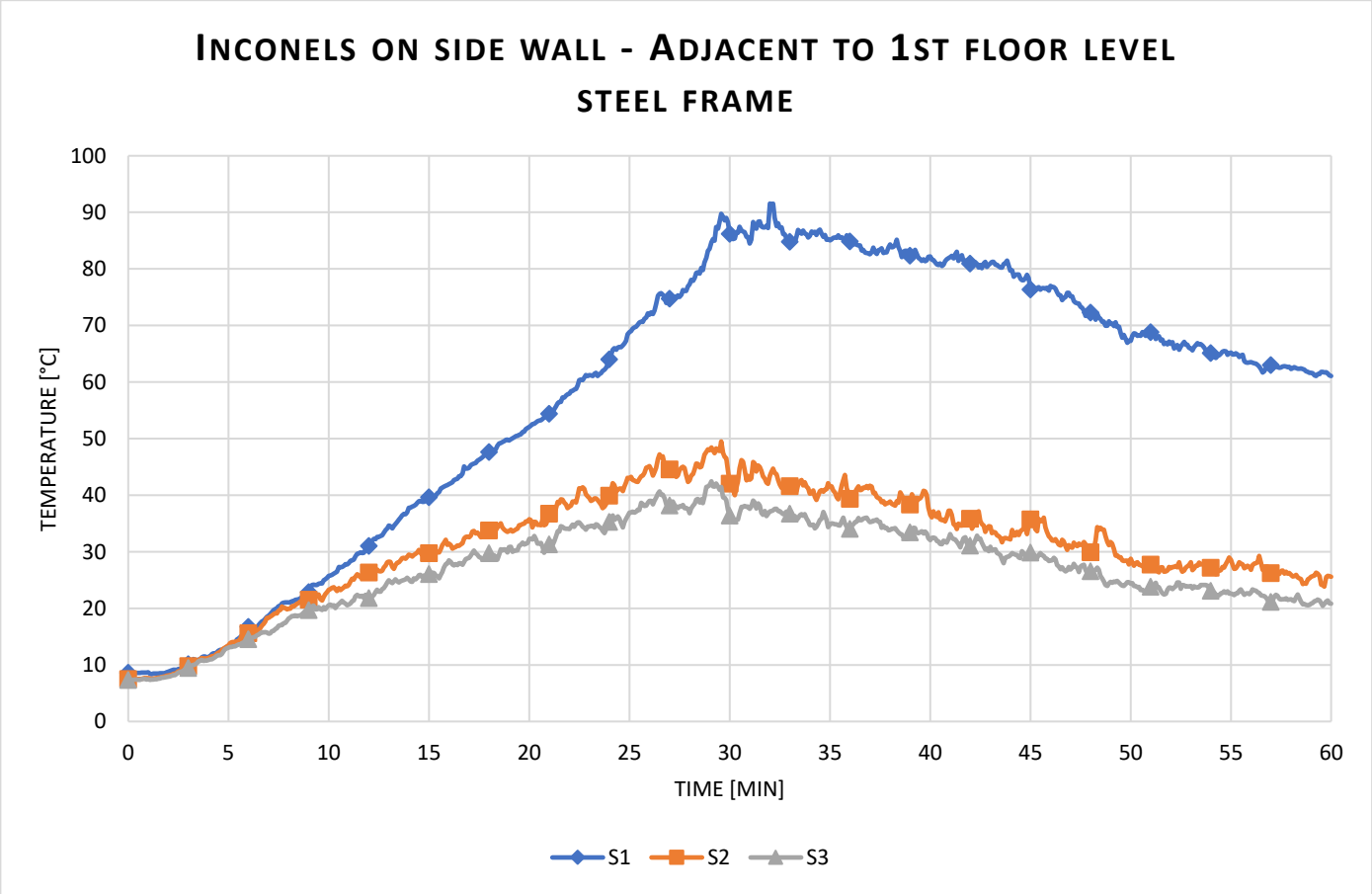

Data measurement from the Inconels on steel C - section

Layout

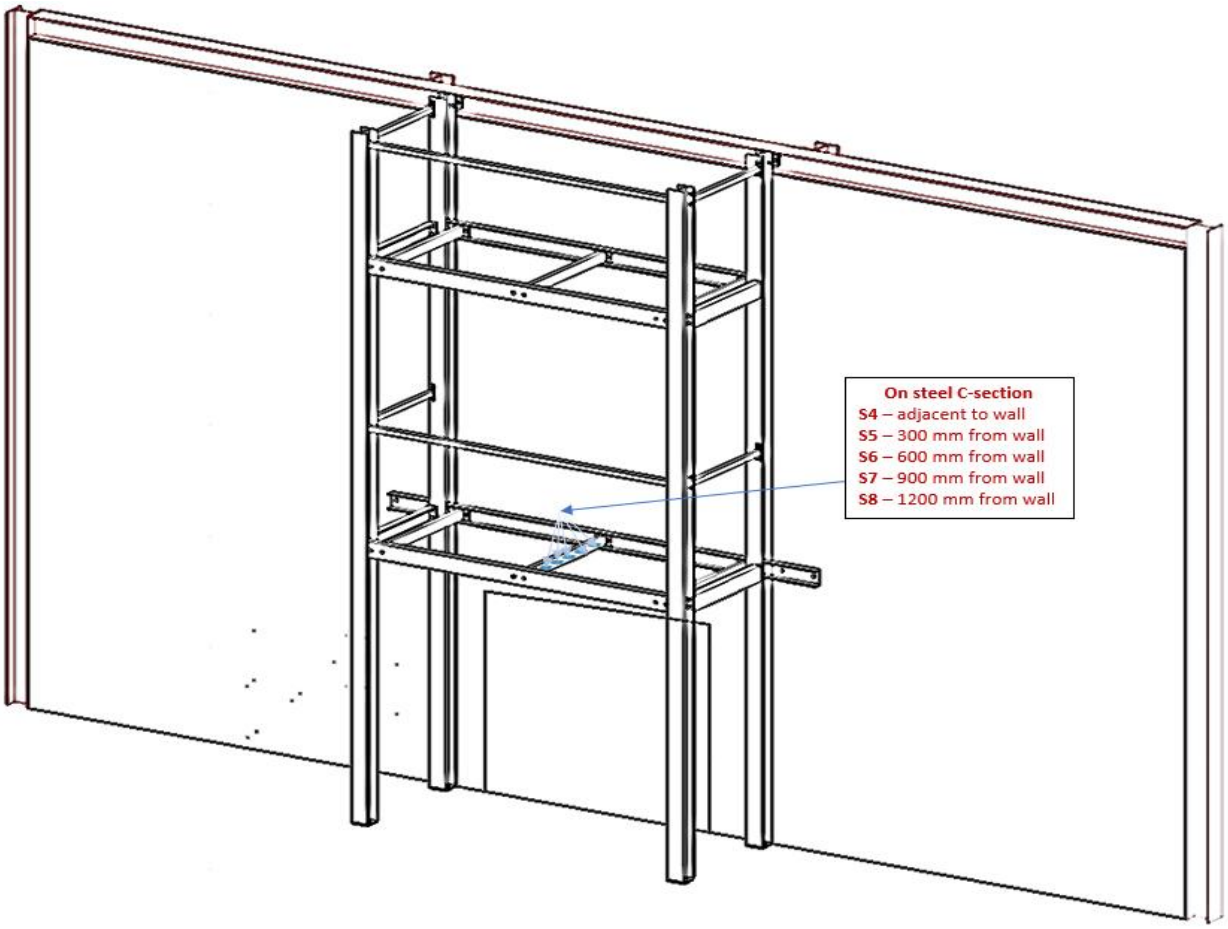

Temperature measured from the Inconels on steel C-section underneath 1st floor

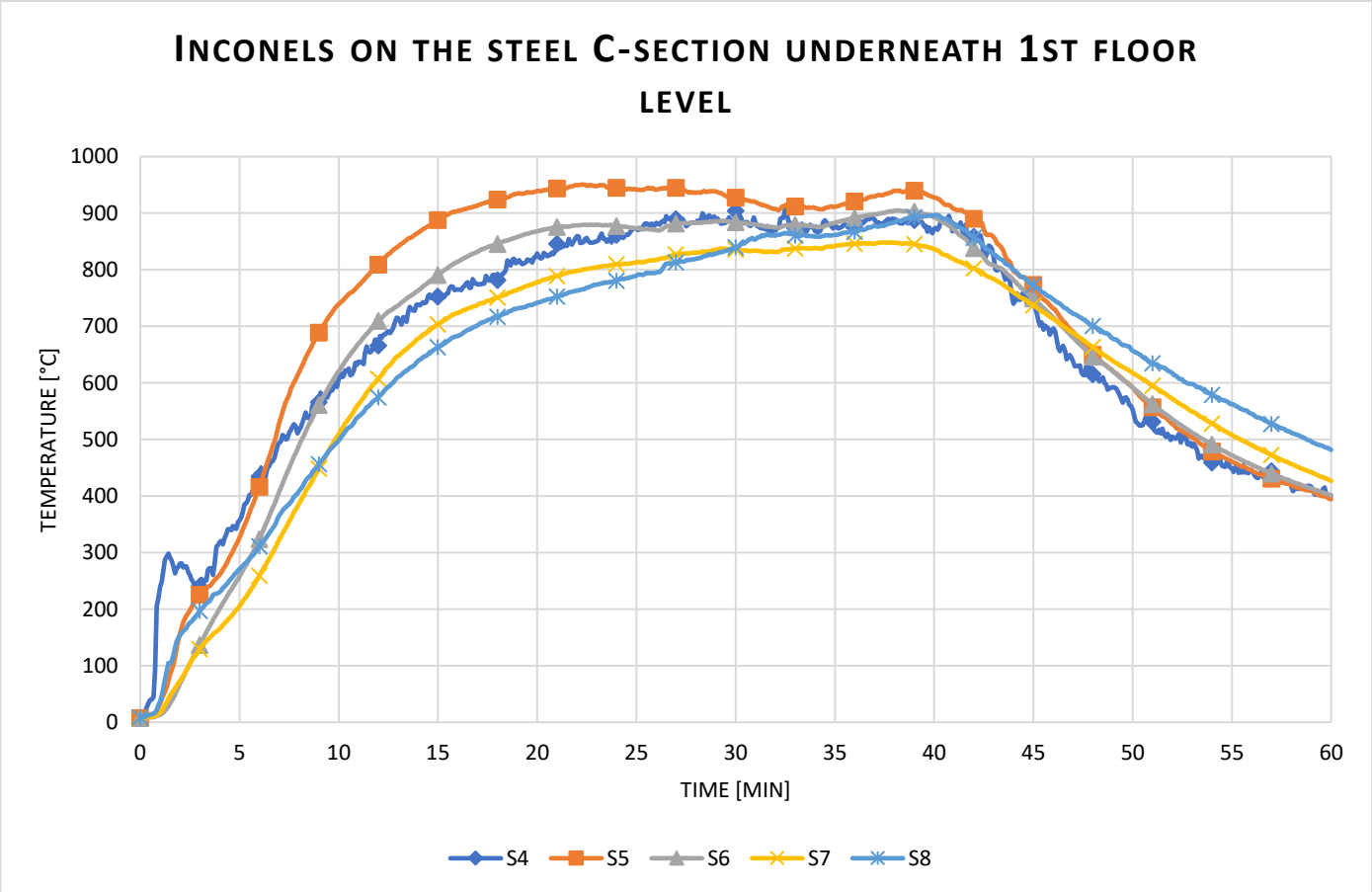

Data measurement from the Inconels facing crib (ground floor)

Layout

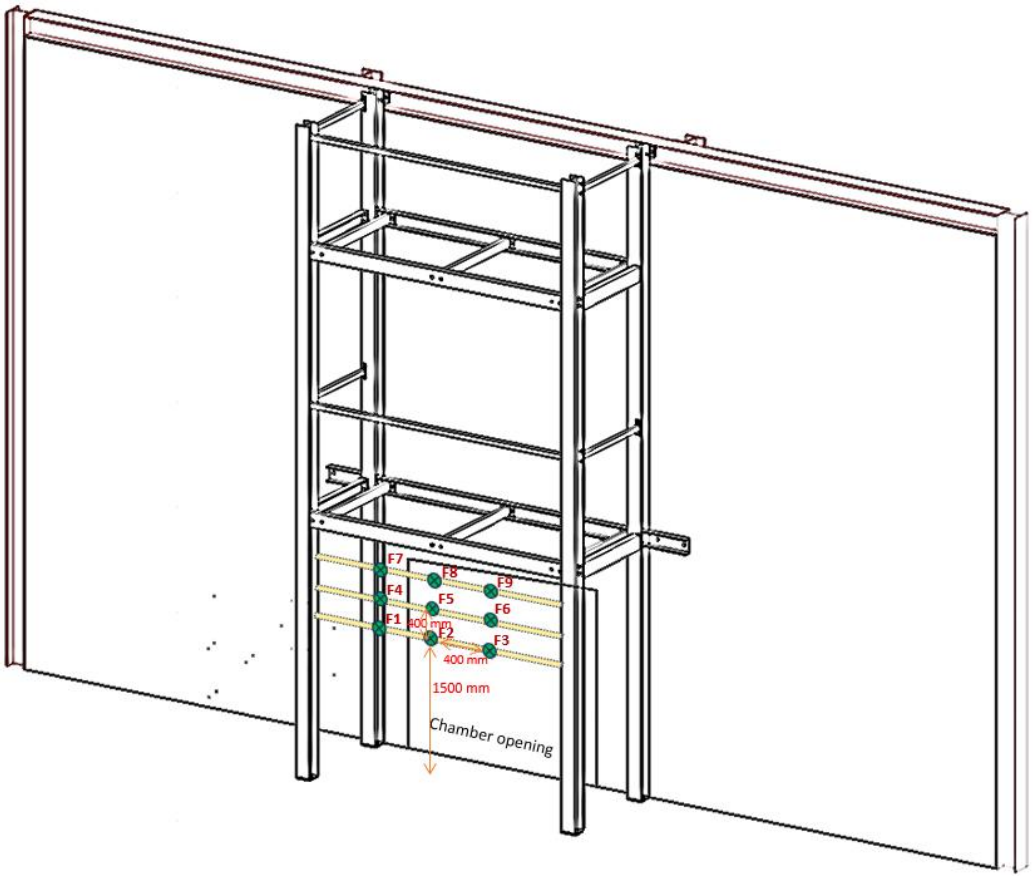

Temperature measured from the Inconels above the handrails facing the crib

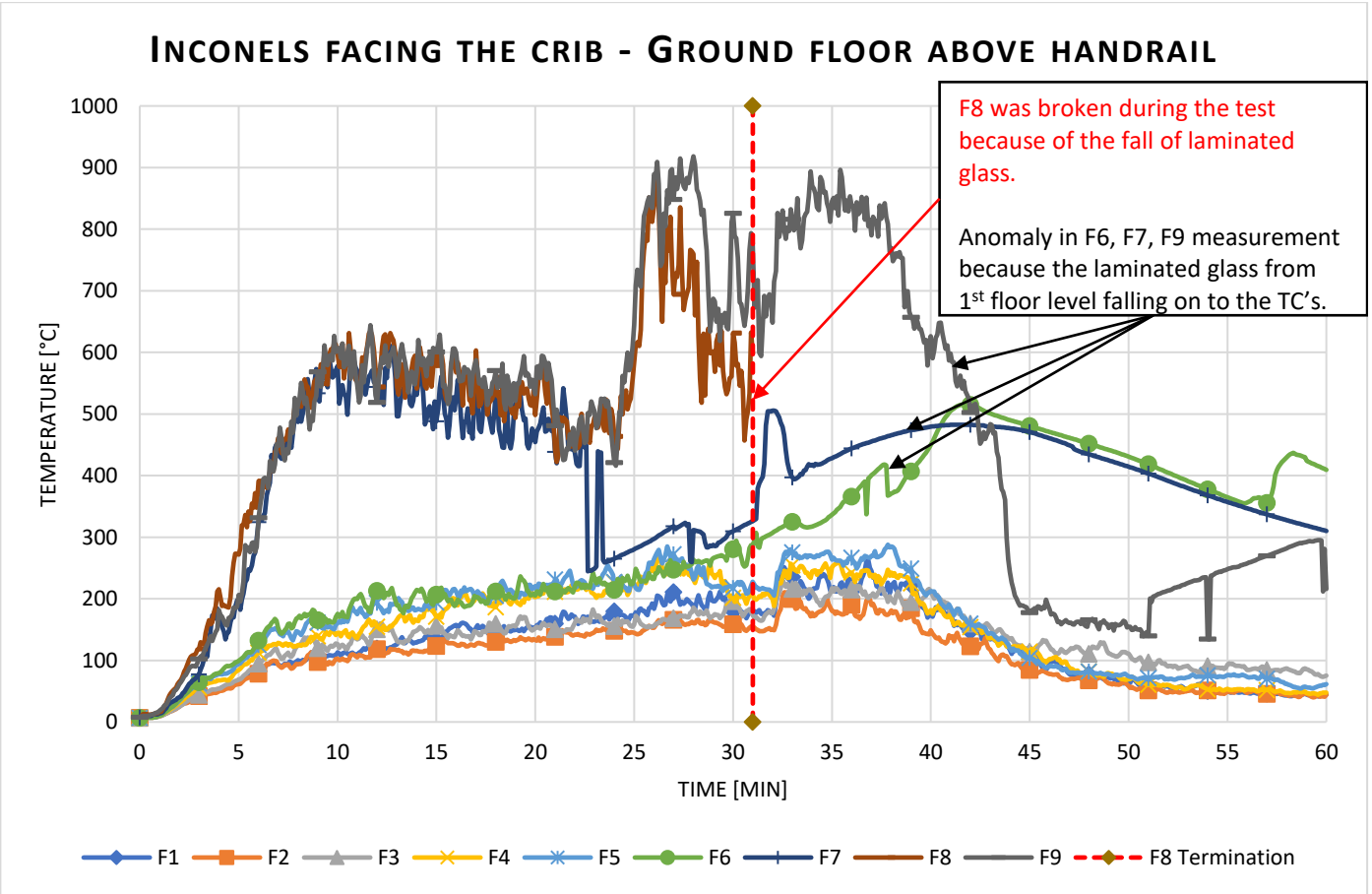

Data measurement from the Inconels on 1st floor

Layout

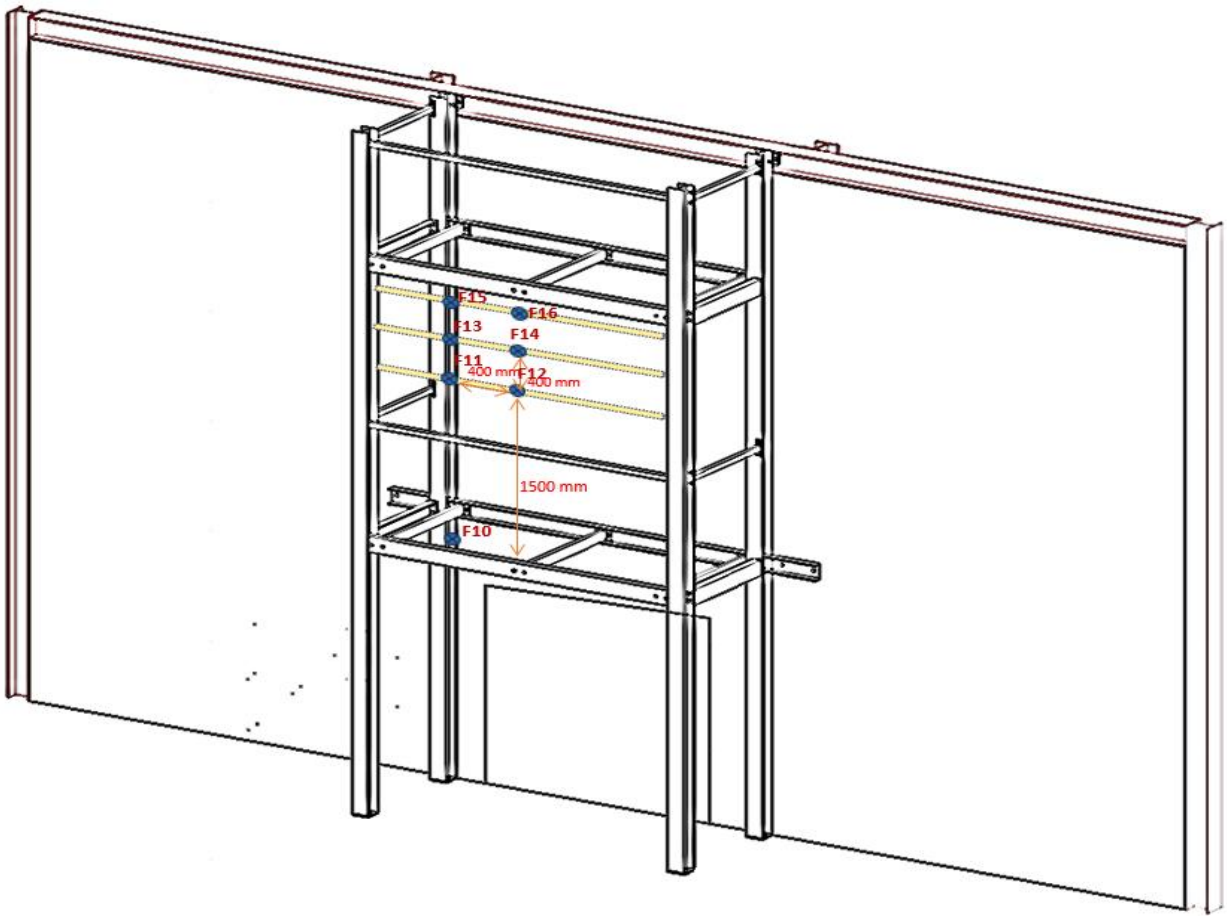

Temperature measured from the Inconels facing outwards on 1st floor on floor and above handrails

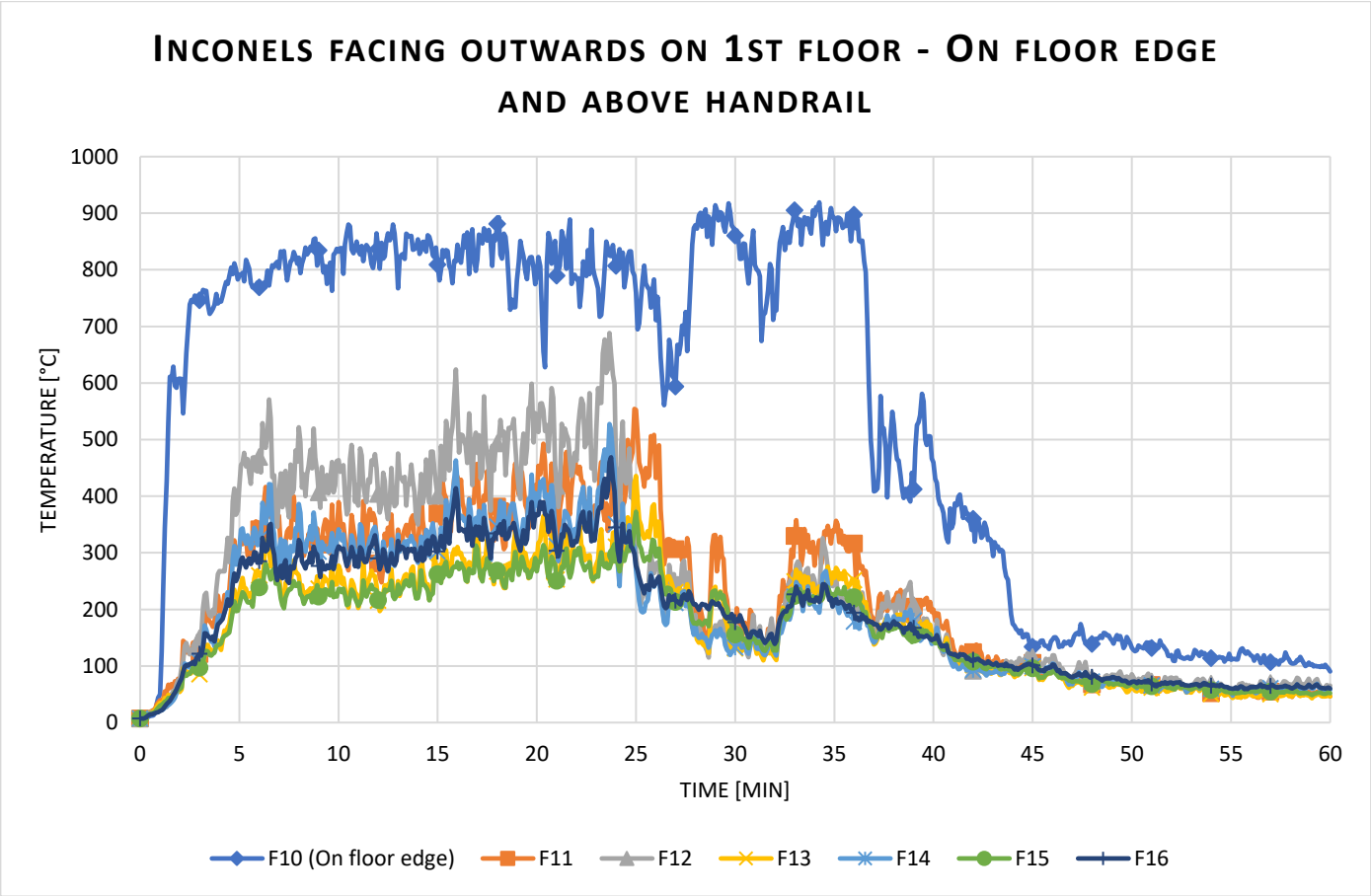

Data measurement from the Inconels on 2nd floor

Layout

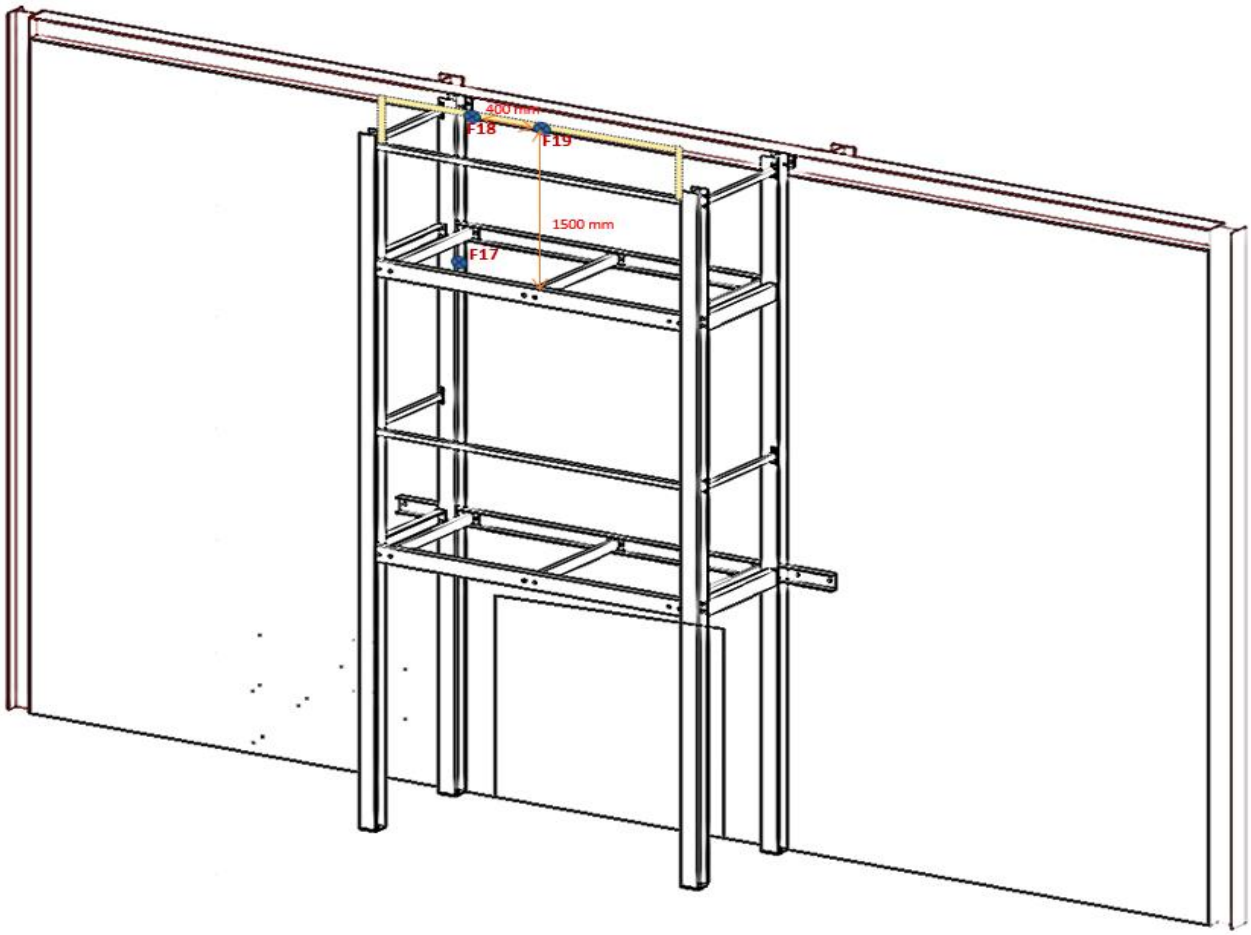

Temperature measured from the Inconels facing outwards on 2nd floor on floor and above handrails

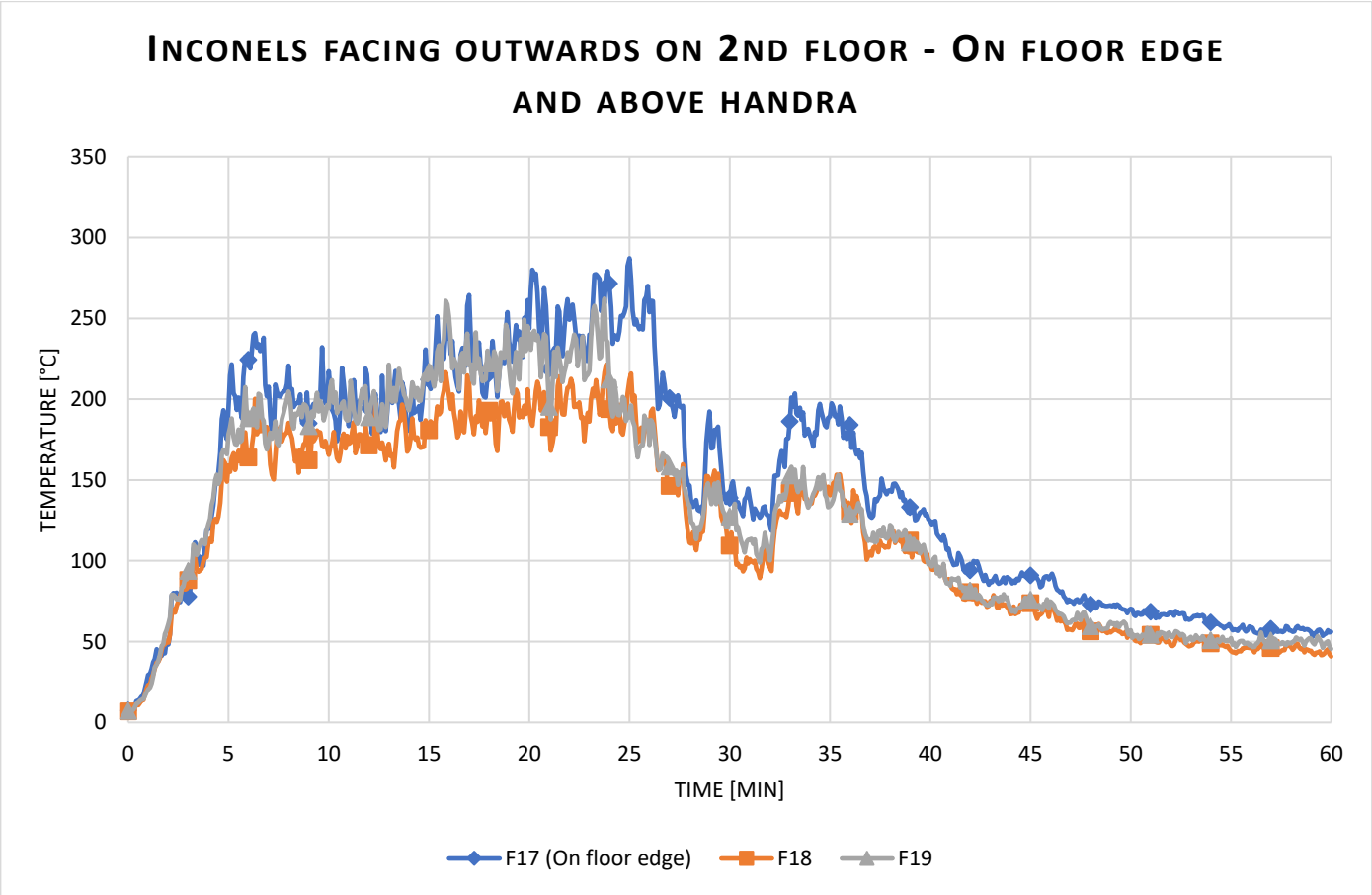

4. PICTURES TAKEN DURING THE TEST

00:05:29

0:20:34

0:28:88

0:38:29

0:43:09

0:50:08

0:58:28

Test date: 31st of January 2024

Project Nr: EUI-23-000746

Test Nr: EUI-23-CHB-000746E

1. INSTRUMENTATION LAYOUT

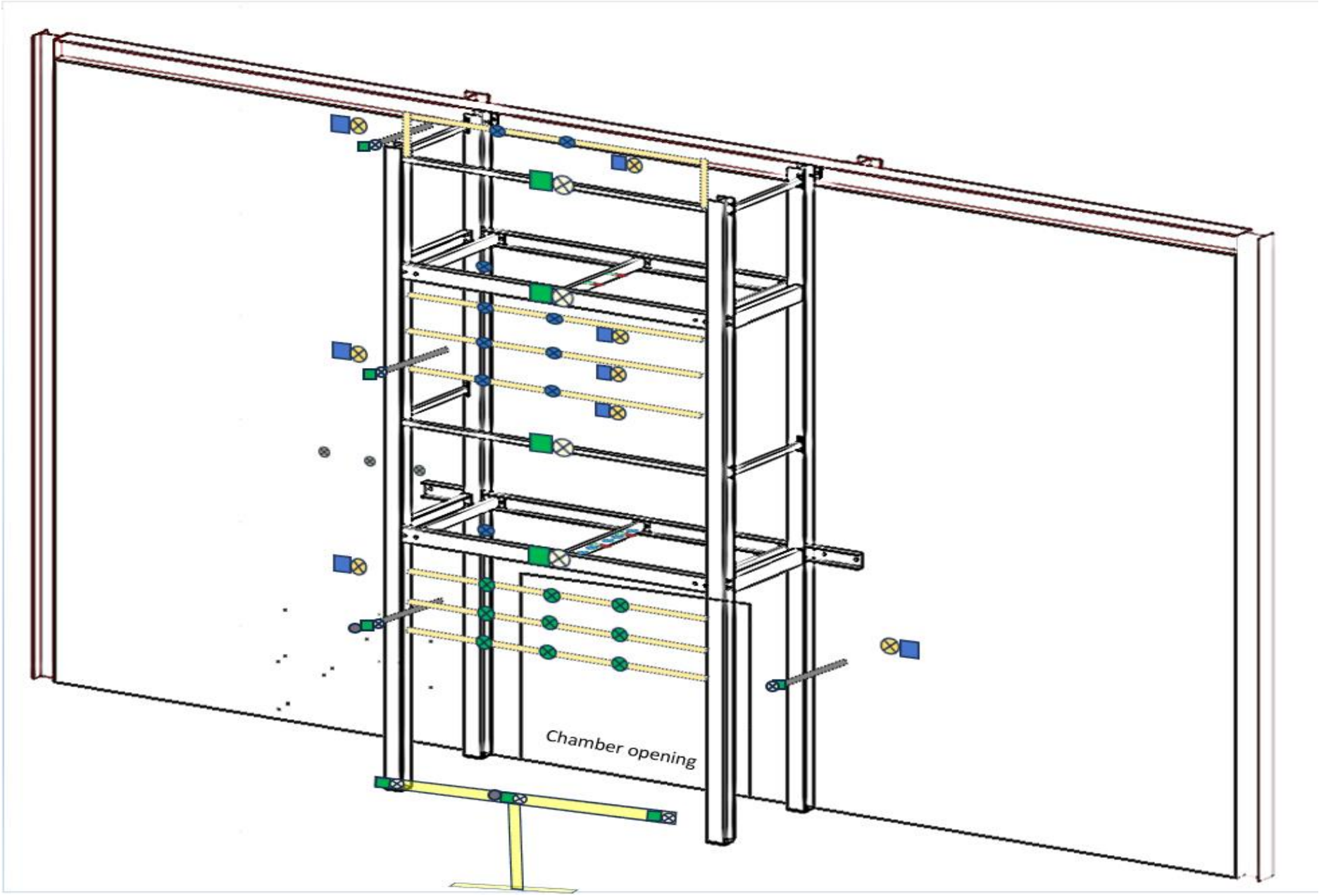

Plate TC on exposed face

Inconel TC on exposed face

Inconel TC on wall

Plate TC on wall

Heat flux meter

2x Plate TC's underside the Balcony floor –
At 450 mm and 900 mm from the wall

2x Inconel TC's underside the Balcony floor –
At 450 mm and 900 mm from the wall

3m long TC facing outwards,
extends out by 50 mm

TC on the steel C-section
S4 – exposed edge of wall
S5 – 300mm away from the wall
S6 – 600mm away from the wall
S7 – 900mm away from the wall
S8 – 1200mm away from the wall

3m long TC facing the crib,
extends out by 50 mm

Nomenclature:

The first word of each acronym is to identify their position:

G - Ground floor

S – Side edge to the chamber opening

M – Middle floor

T – Top floor

F – Front facing Inconels

The second word denotes the instrument:

Fluxmeter (R), Plate TC (P), Inconel (T)

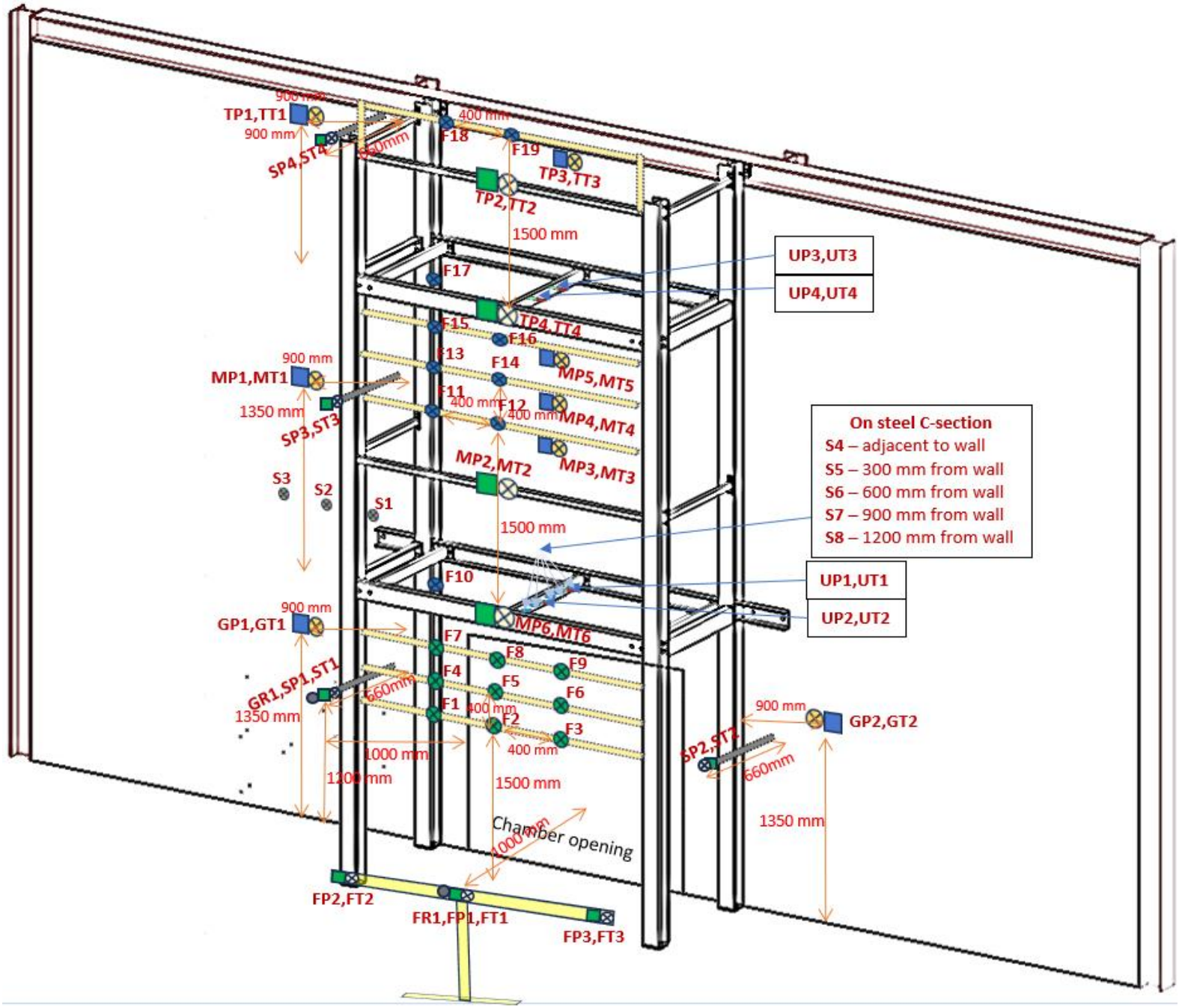
TP1,TT1
900 mm
SP4,ST4
660mm
400 mm
F18
F19
TP3,TT3
TP2,TT2
1500 mm
F17
UP3,UT3
UP4,UT4
TP4,TT4
F15
F16
F13
F14
MP5,MT5
MP1,MT1
F11
F12
MP4,MT4
1350 mm
SP3,ST3
MP3,MT3
MP2,MT2
S3
S2
S1
On steel C-section
S4 – adjacent to wall
S5 – 300 mm from wall
S6 – 600 mm from wall
S7 – 900 mm from wall
S8 – 1200 mm from wall
F10
UP1,UT1
UP2,UT2
GP1,GT1
MP6,MT6
F7
F8
F9
F4
F5
F6
GR1,SP1,ST1
F1
F2
F3
GP2,GT2
SP2,ST2
1000 mm
1200 mm
Chamber opening
FP2,FT2
FR1,FP1,FT1
FP3,FT3

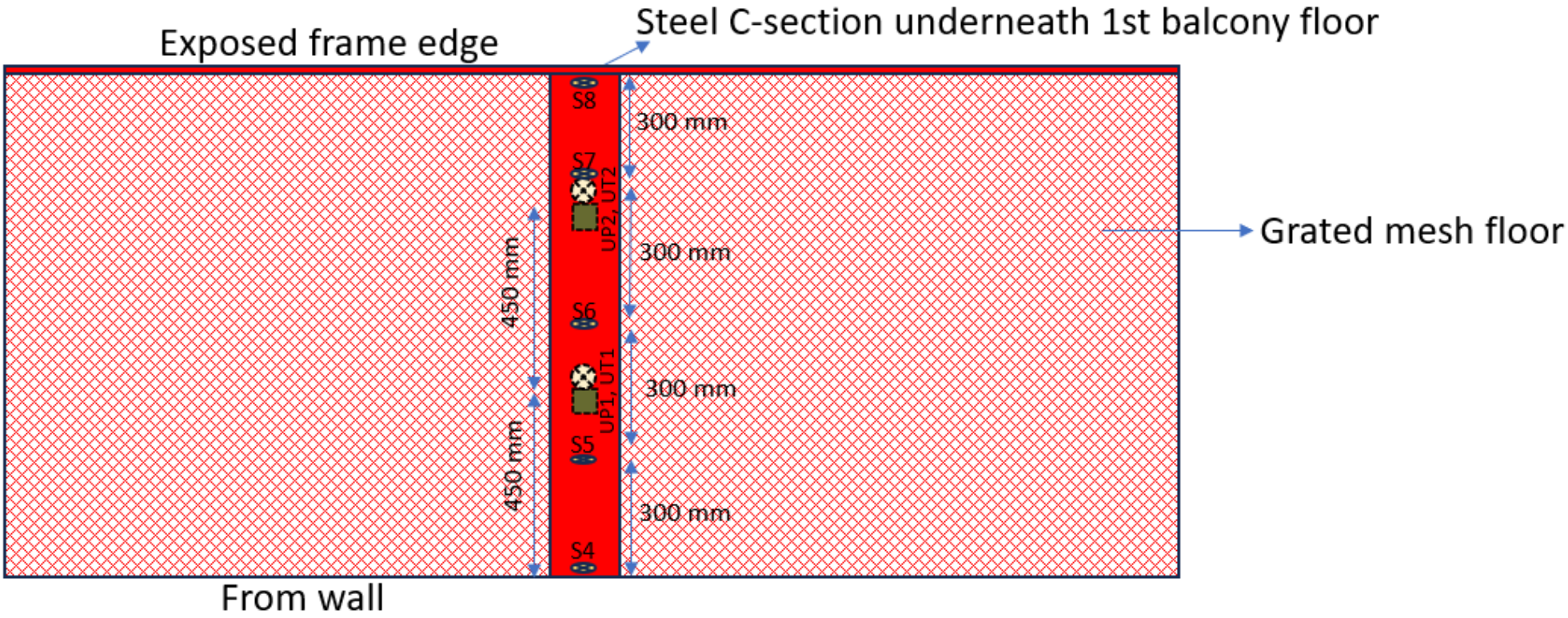

S4 – 10 mm from the wall on Steel C section to measure steel temperature
S5 – 300 mm from the wall on Steel C section to measure steel temperature
S6 – 600 mm from the wall on Steel C section to measure steel temperature
S7 – 900 mm from the wall on Steel C section to measure steel temperature
S8 – 1200 mm from the wall on Steel C section to measure steel temperature

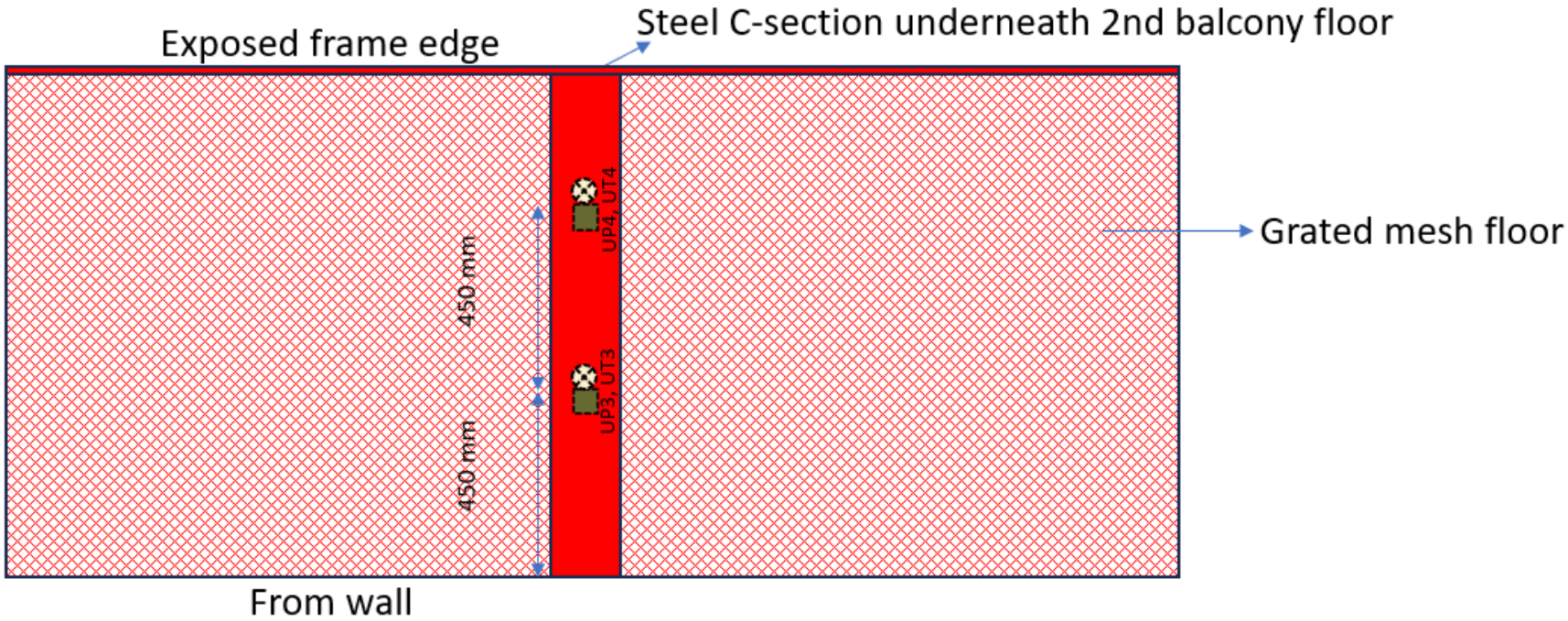
Exposed frame edge
Steel C-section underneath 2nd balcony floor
Grated mesh floor
450 mm
450 mm
UP4, UT4
UP3, UT3
From wall

Figure 1: Elevation view of the system during build.

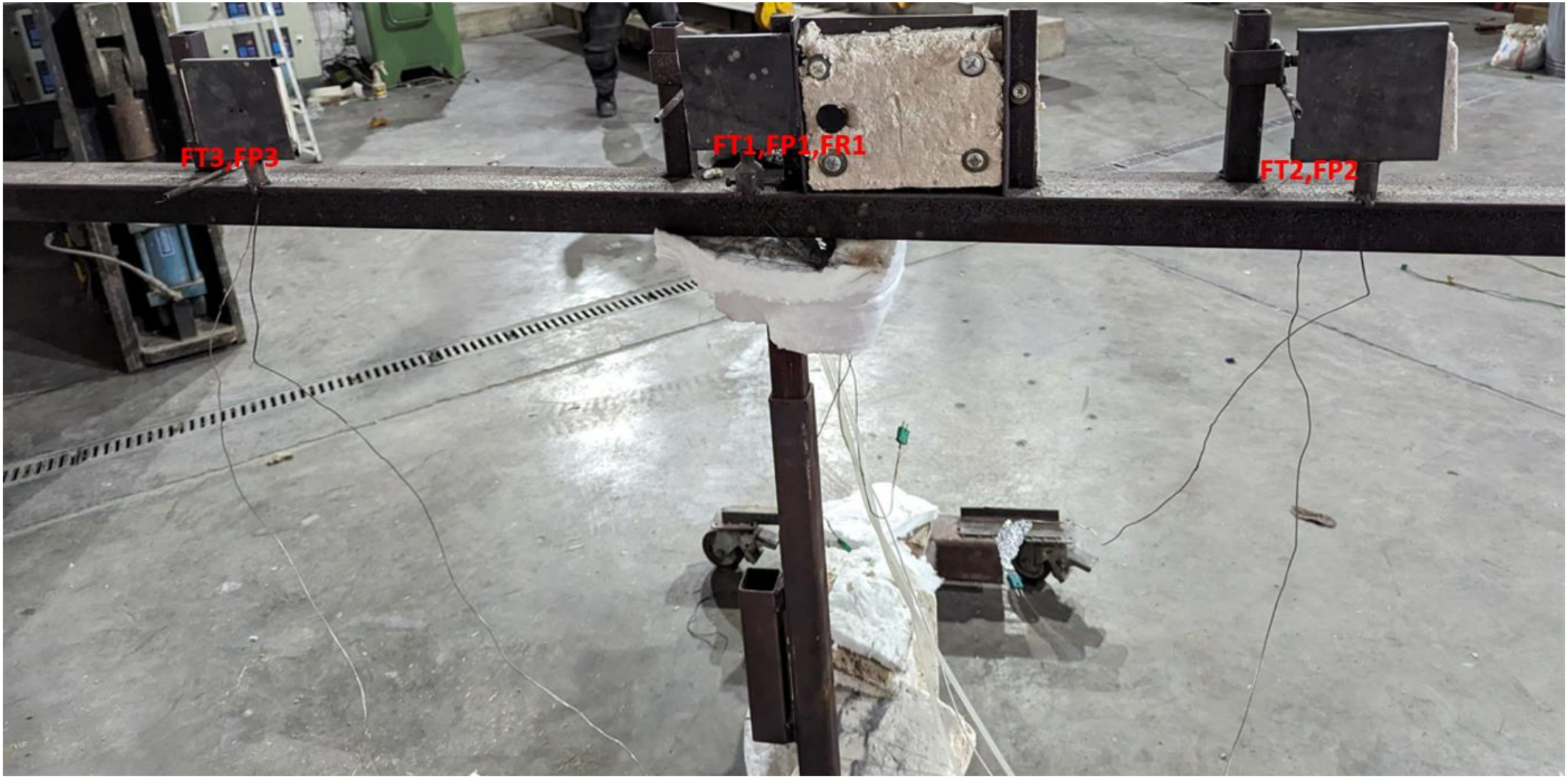

Figure 2: The front facing Fluxmeter, Plate TC's and Inconels (placed 1m away from the target crib hypothetical position).

2. VISUAL OBSERVATIONS DURING THE TEST

Time from ignition (min:sec)	***Observation***
00:00	**Ignition of crib.**
01:10	Flames out of combustion chamber
01:25	Flames start to impinge on laminated glass at 1st floor level on main face.
02:15	Formation of water droplets (Delamination) in the laminated glass panels.
04:50	Flame noticed on the bottom section of the laminated glass installed at 1st floor front face.
05:56	Flame noticed on the bottom section of both the glasses installed at 1st floor front face.
08:03	Ignition of target crib at 1st floor.
08:23	Smoke emerging from ground floor target crib noticed.
10:17	Top edges of both glasses at 1st floor front face on flames.
11:28	Ignition of target crib at ground floor.
12:06	Delamination noticed on both glasses installed on front face at ground floor level.
13:46	Delamination of glasses on either side at Ground floor noticed.
15:39	Top edge of the glasses installed on front face at ground floor level on flames.
21:25	Front face glasses installed at 1st floor level start to collapse.
22:25	Front face glasses installed at Ground floor level starts to collapse.
23:23	Flaming debris and pool fire noticed.
24:07	Glass installed on the left side of the balcony at 1st floor level on flames. Wood crib starts to collapse.
24:40	Bottom right glass on the front face at ground floor level collapsed.
25:30	Glass installed on the right side of the balcony at ground floor level on flames.
28:43	Glass installed on the left side of the balcony at 1st floor level collapsed.
32:08	Bottom left glass on the front face at ground floor collapsed.
33:45	Right side glass at ground floor starts to collapse.
34:28	The aforementioned glass collapsed completely.
38:19	Heavy pool fire noticed on the side edges of ground floor level.
39:33	Right side glass installed on the front face at 1st floor level collapsed completely.
40:59	Left side glass installed at ground floor collapsed.
53:20	Right side glass at 1st floor level collapsed completely.
60:00	**End of the test.**

3. DATA RESULTS

Heat Release rate (Hood)

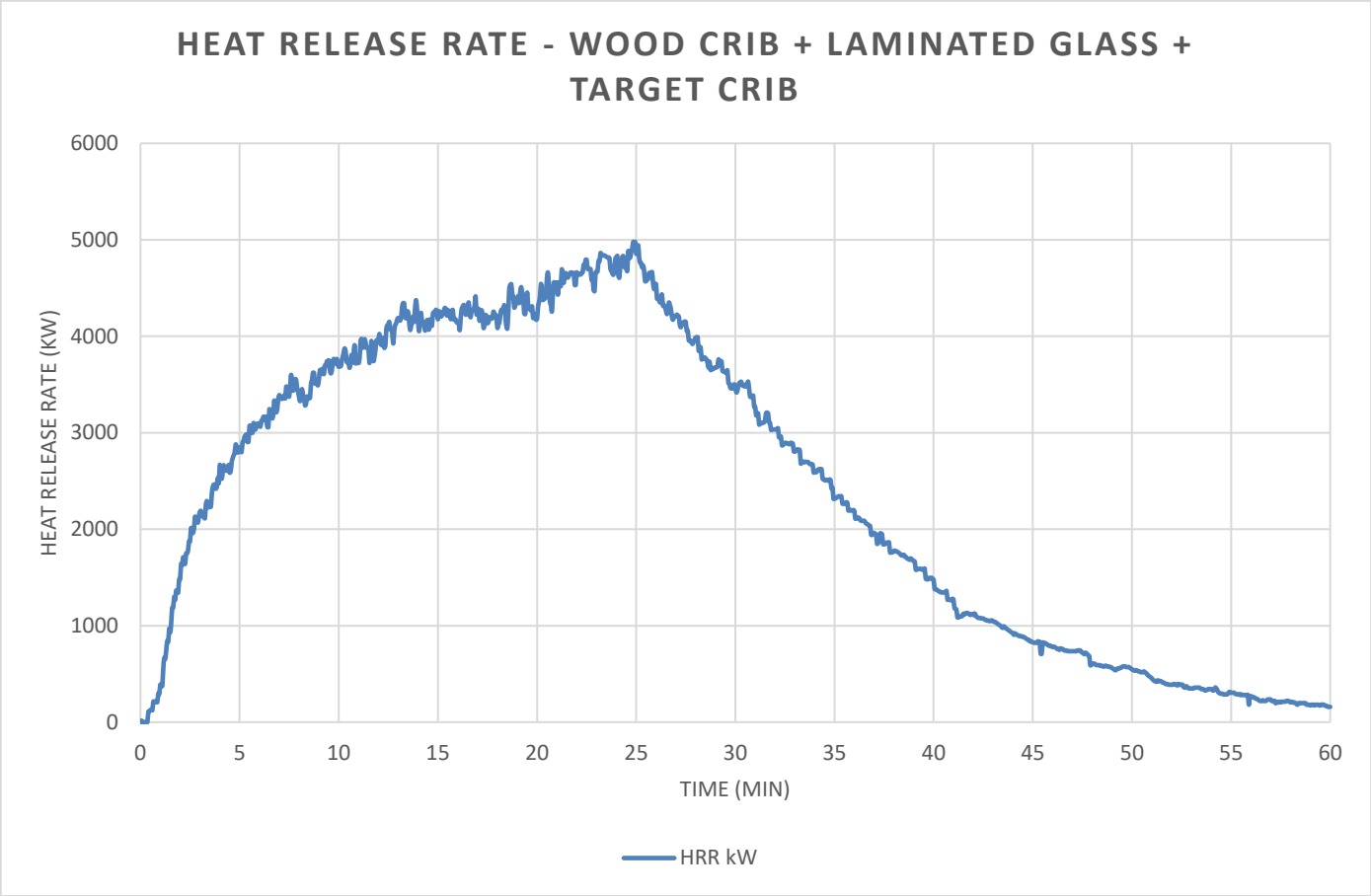

Mass loss

No Mass loss was recorded during this test.

Data measurement at 1m from target crib

Layout

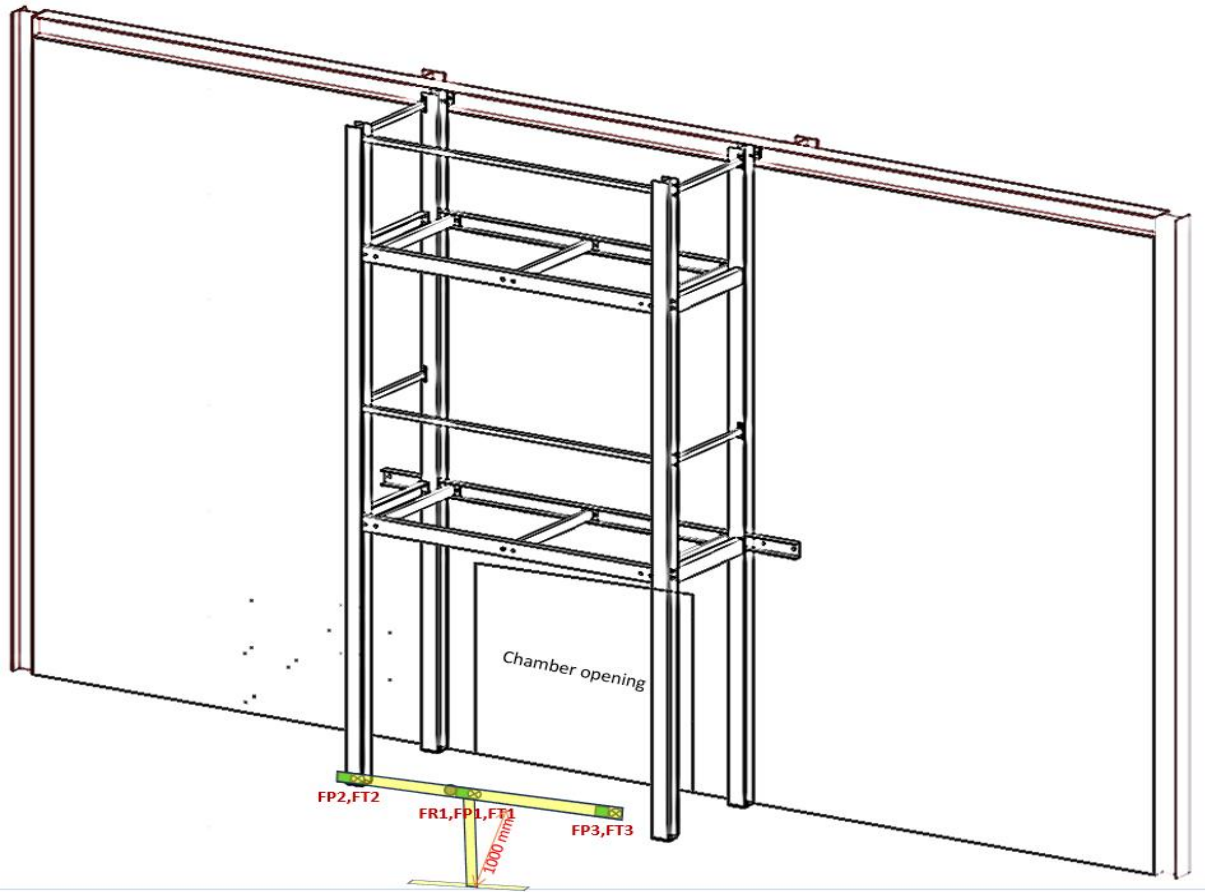

Radiant heat at 1m from target crib

The radiant heat was measured using a water cooled Gardon Guage sensor of range 100 kW/m²:

The heat flux meter was located at 1000 mm from the target crib hypothetical position at mid-height of the wood crib.

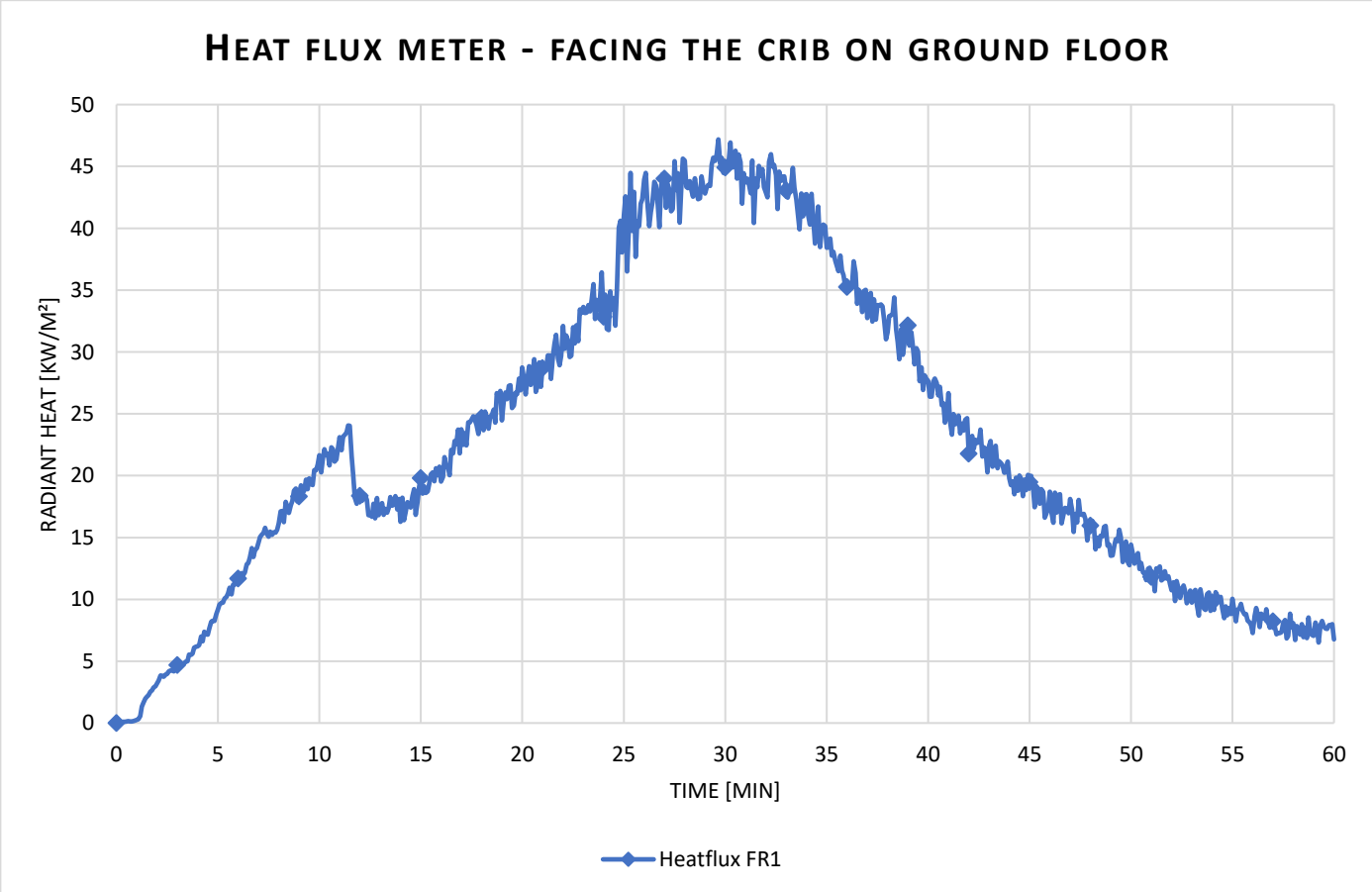

Temperature measured by plate TC's at 1m away from target crib

Ø 1.5 mm mineral insulated thermocouples were placed 1m from the target crib at mid height of wood crib spaced by 500 mm from the centre point ofthe crib. The installation included 3x Inconel thermocouple and 3x plate thermocouples.

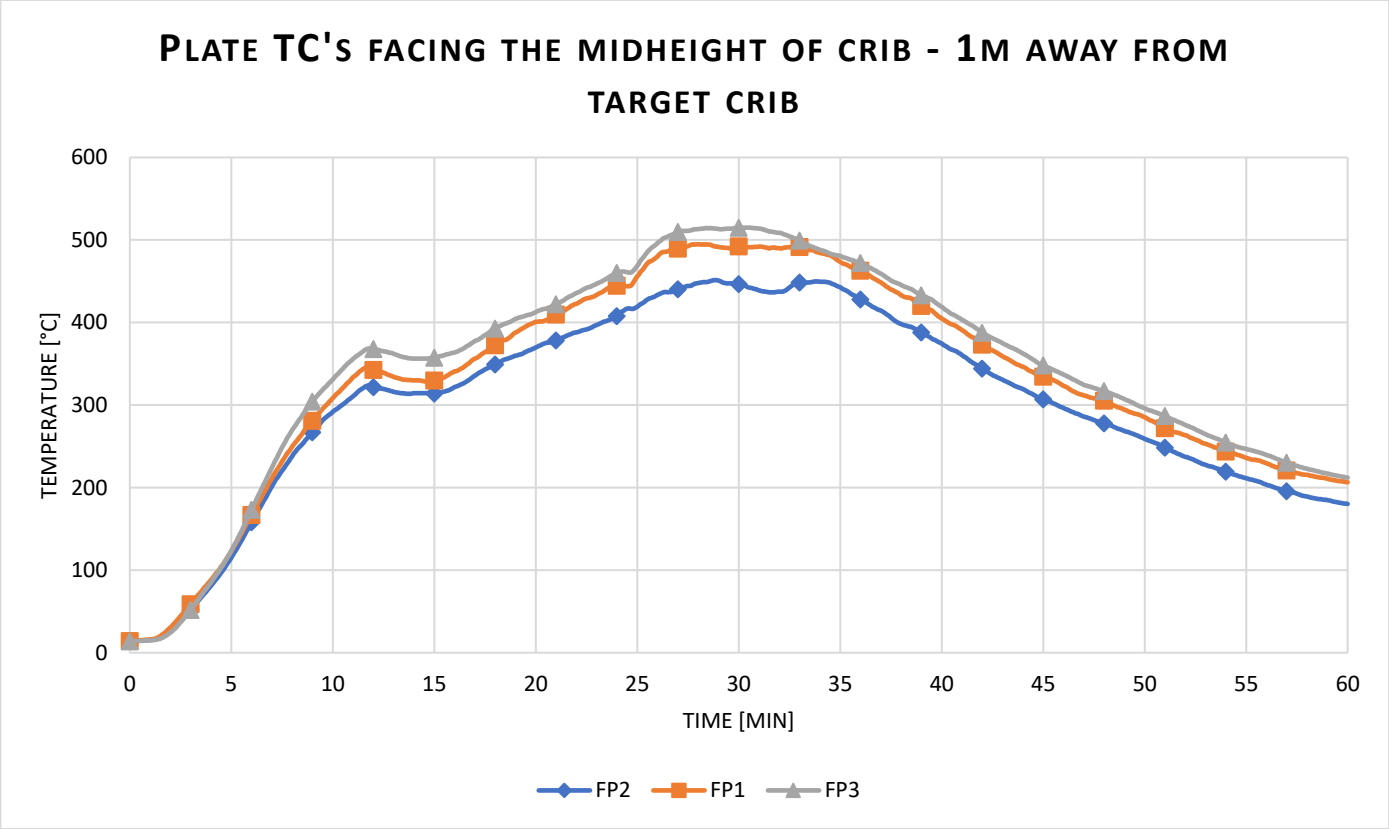

Temperature measured by Inconels at 1m away from crib

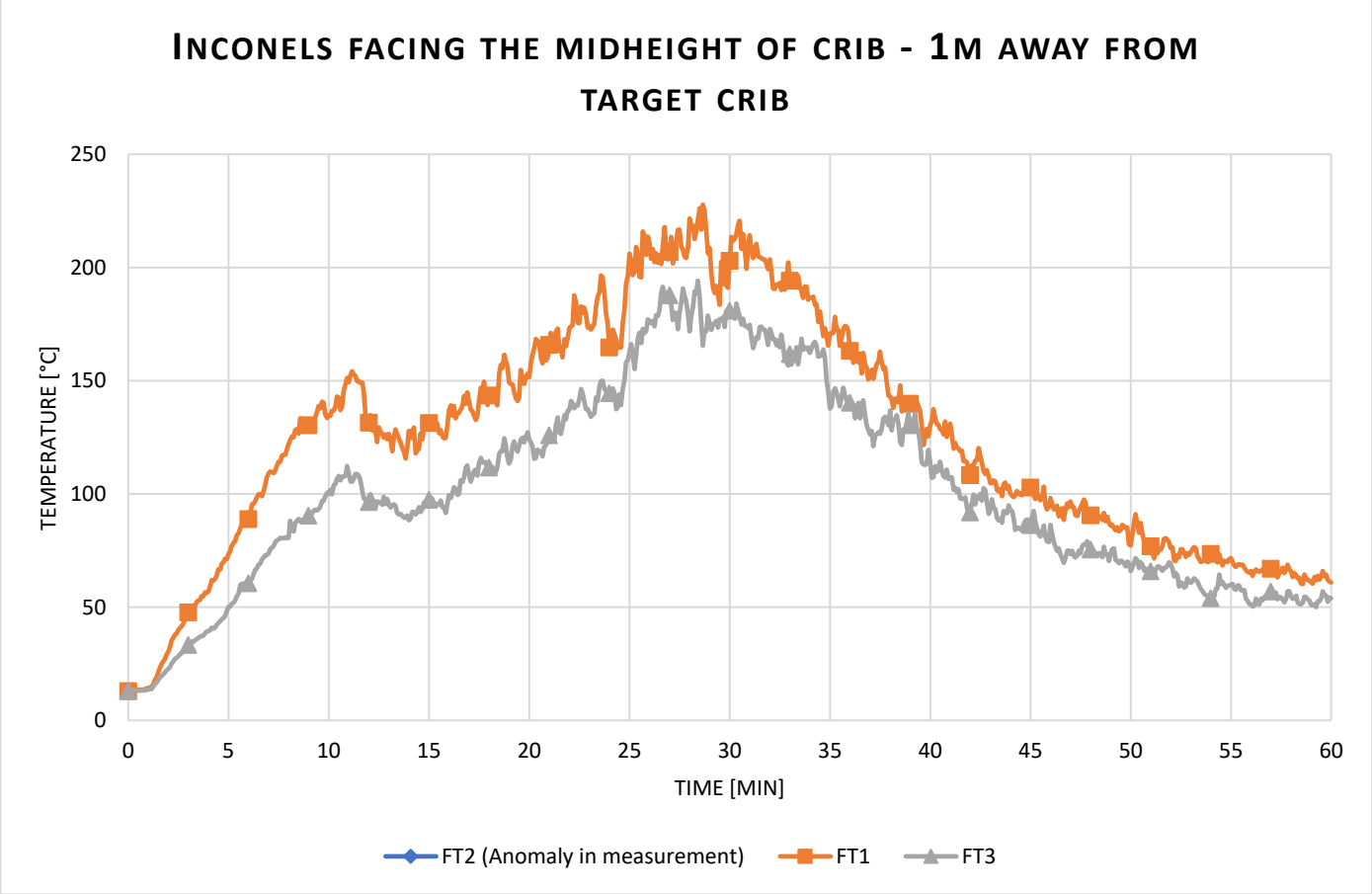

Radiant heat calculated from Plate TC

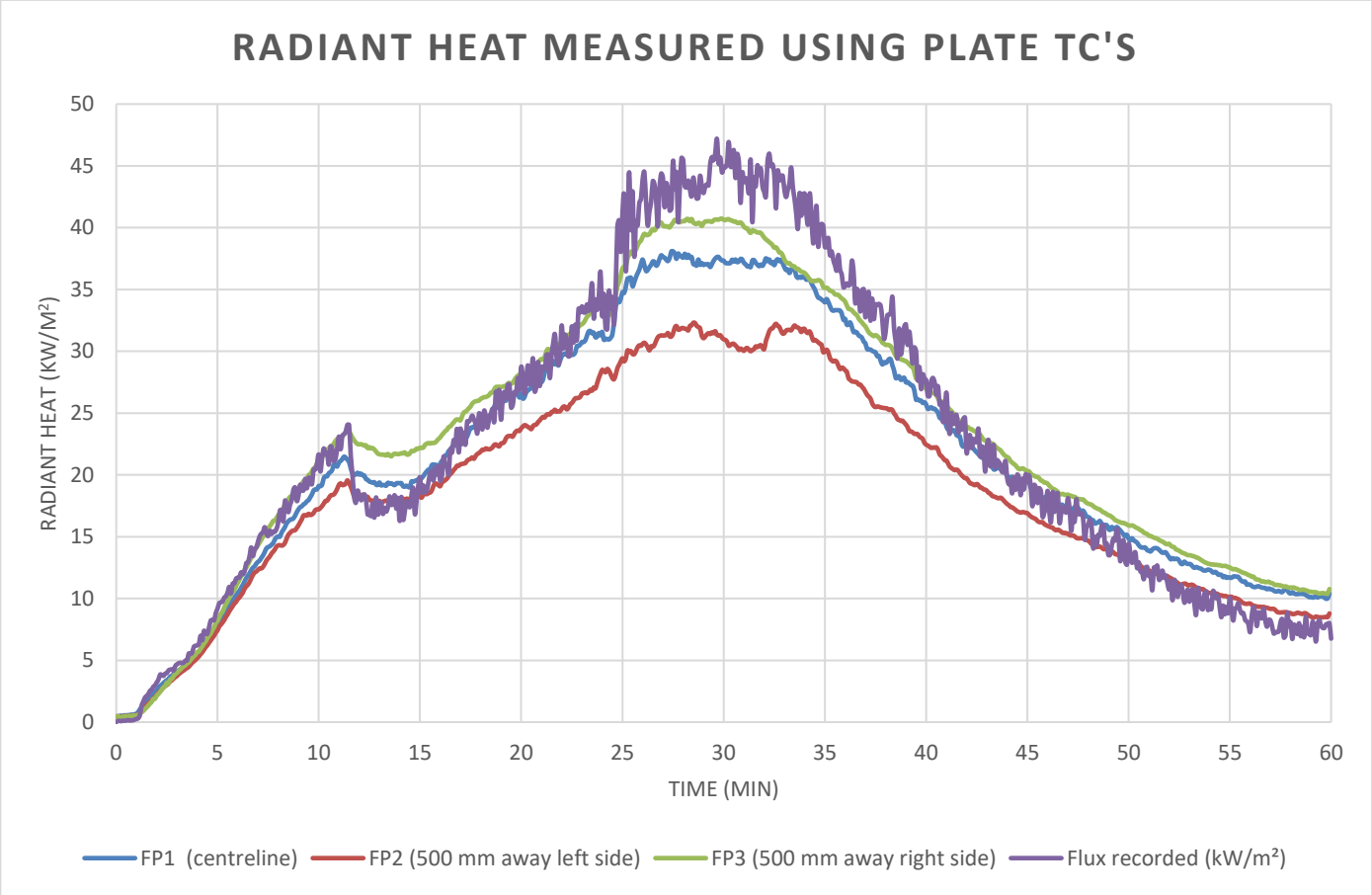

Data measurement from side edges on Ground Floor (660 mm from wall).

Layout

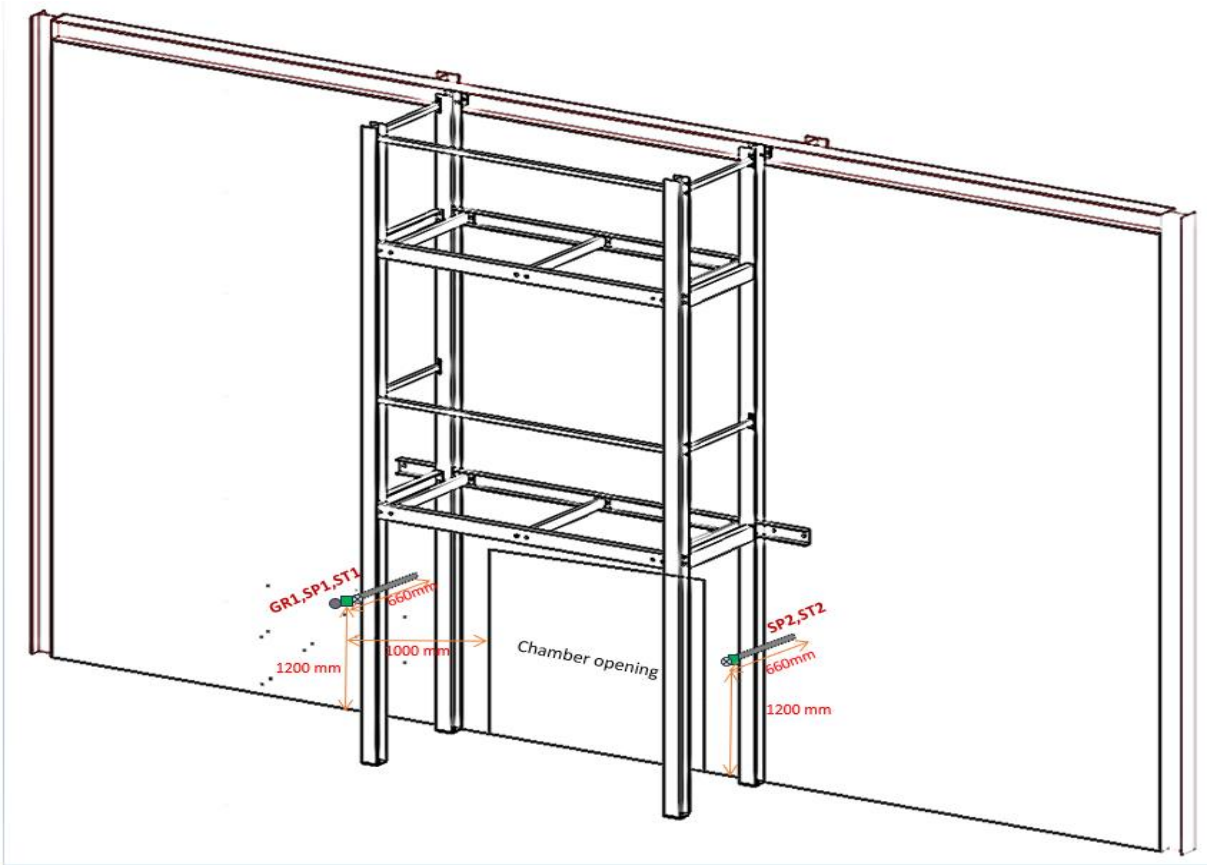

Radiant heat from the flux meter on side edge (660 mm from wall)

The radiant heat was measured using a water cooled Gardon Guage sensor of range 100 kW/m²:

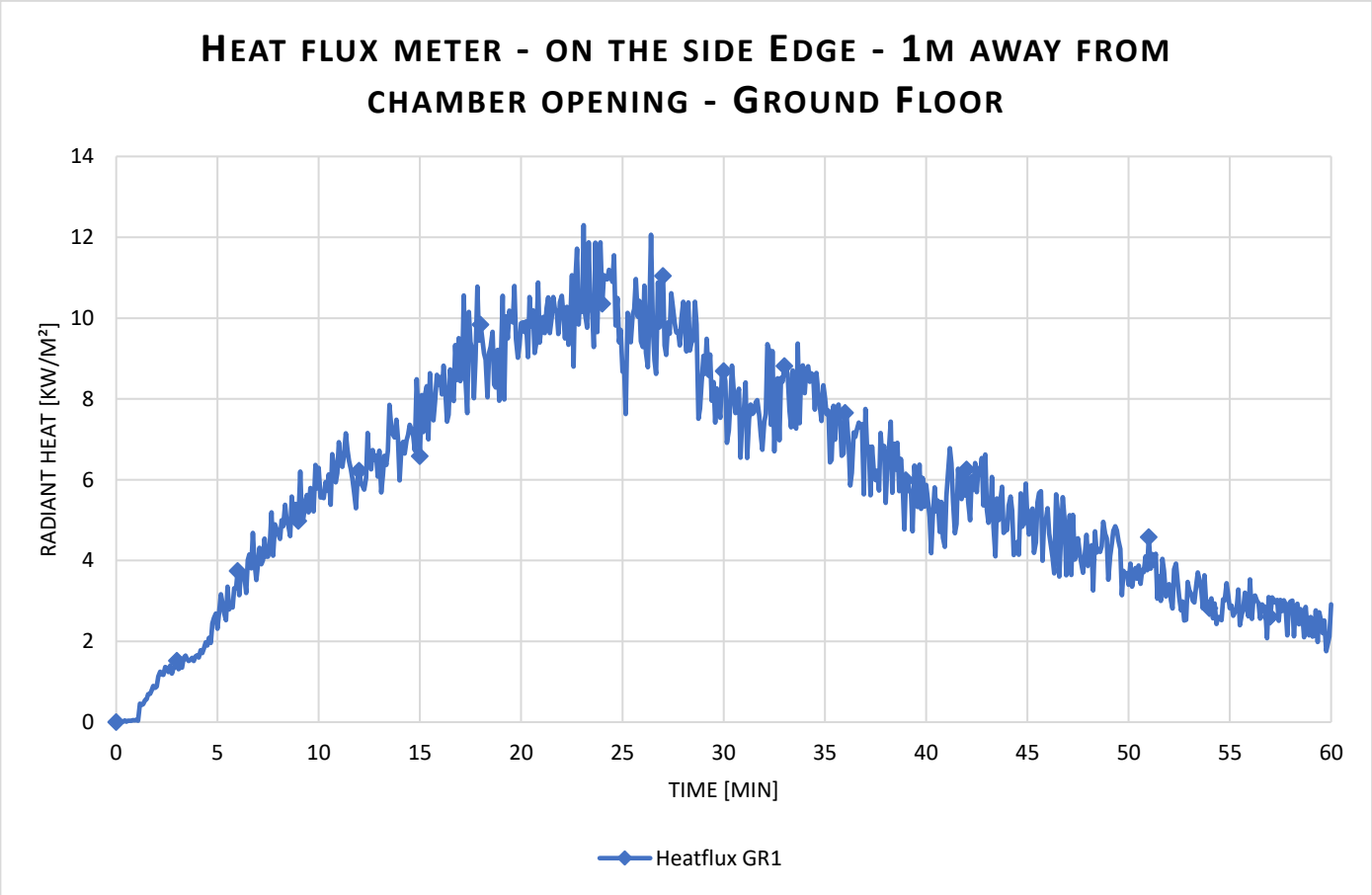

Temperature measured using plate TC's on the side edge

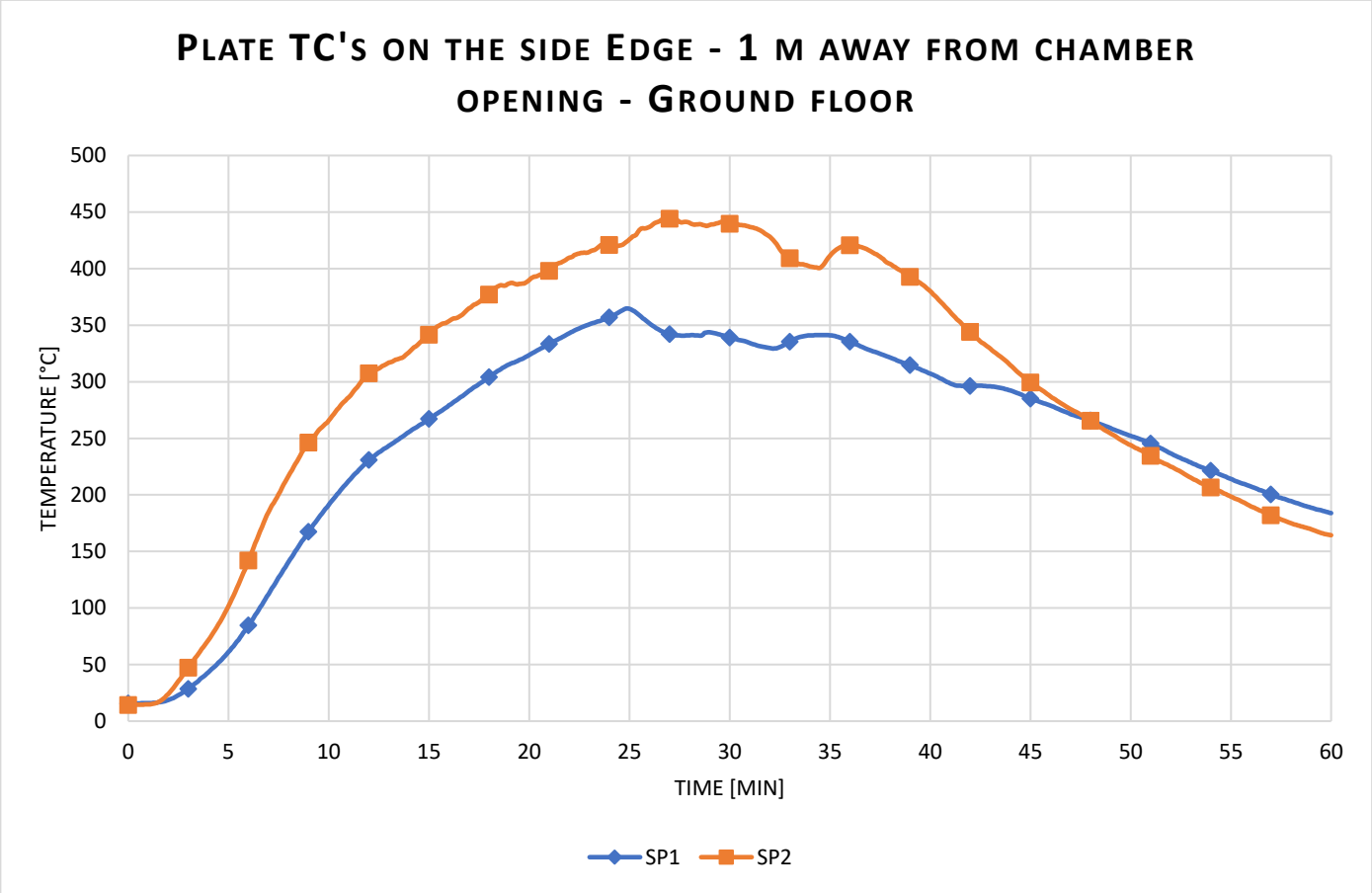

Temperature measured using Inconels on the side edge

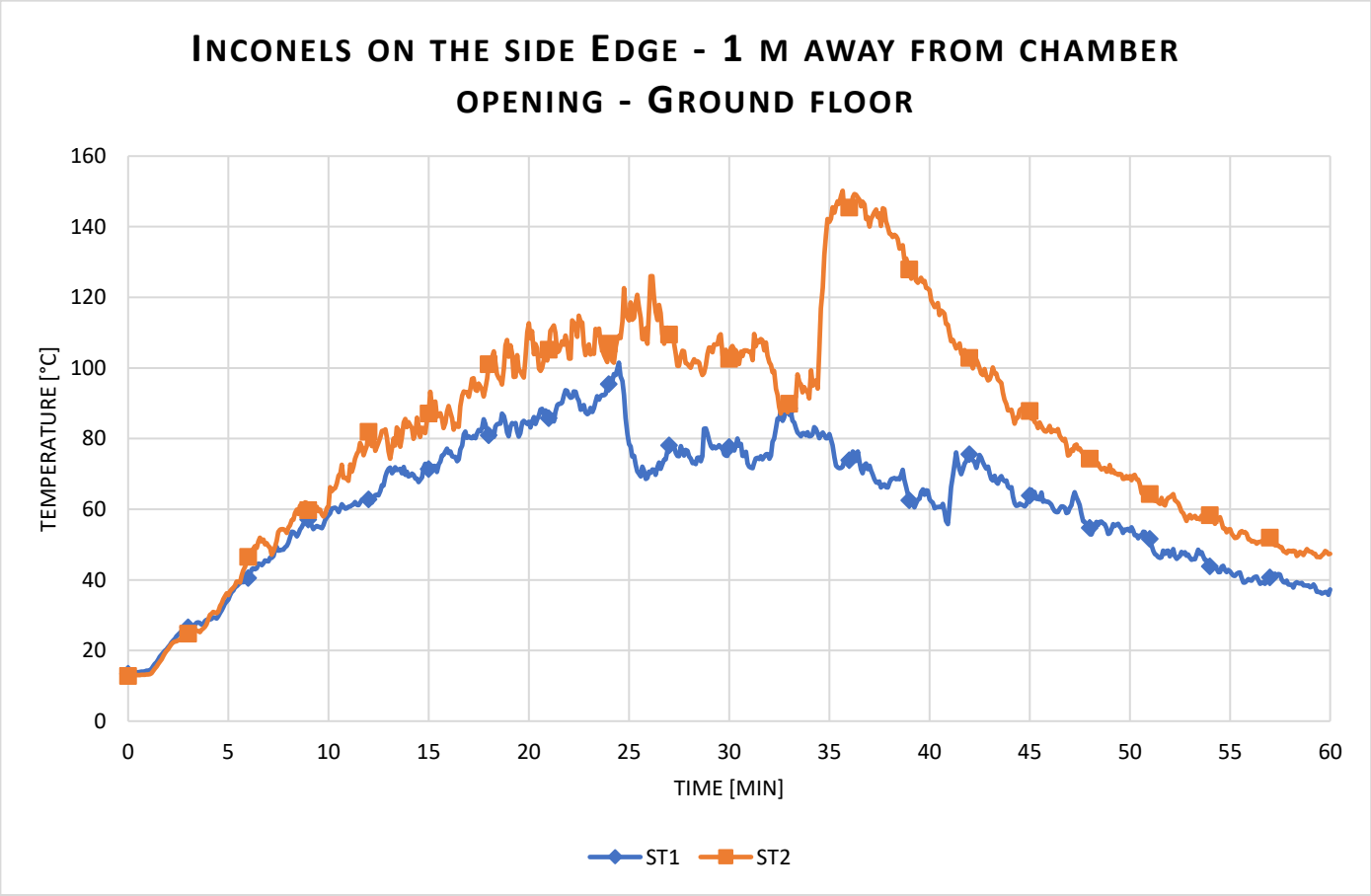

Radiant heat calculated from Plate TC

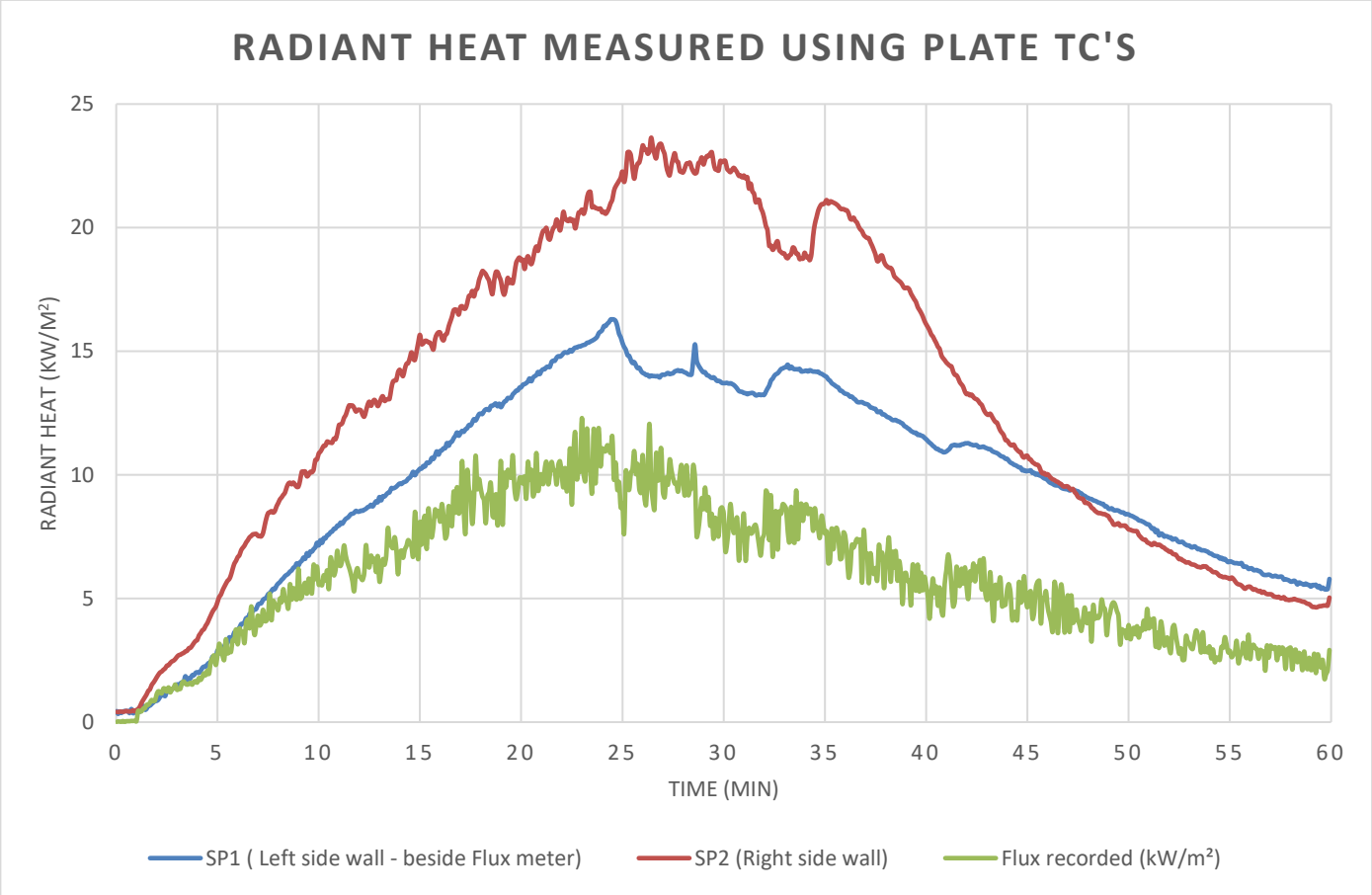

Data measurement from side edges on 1st Floor (660 mm from wall).

Layout

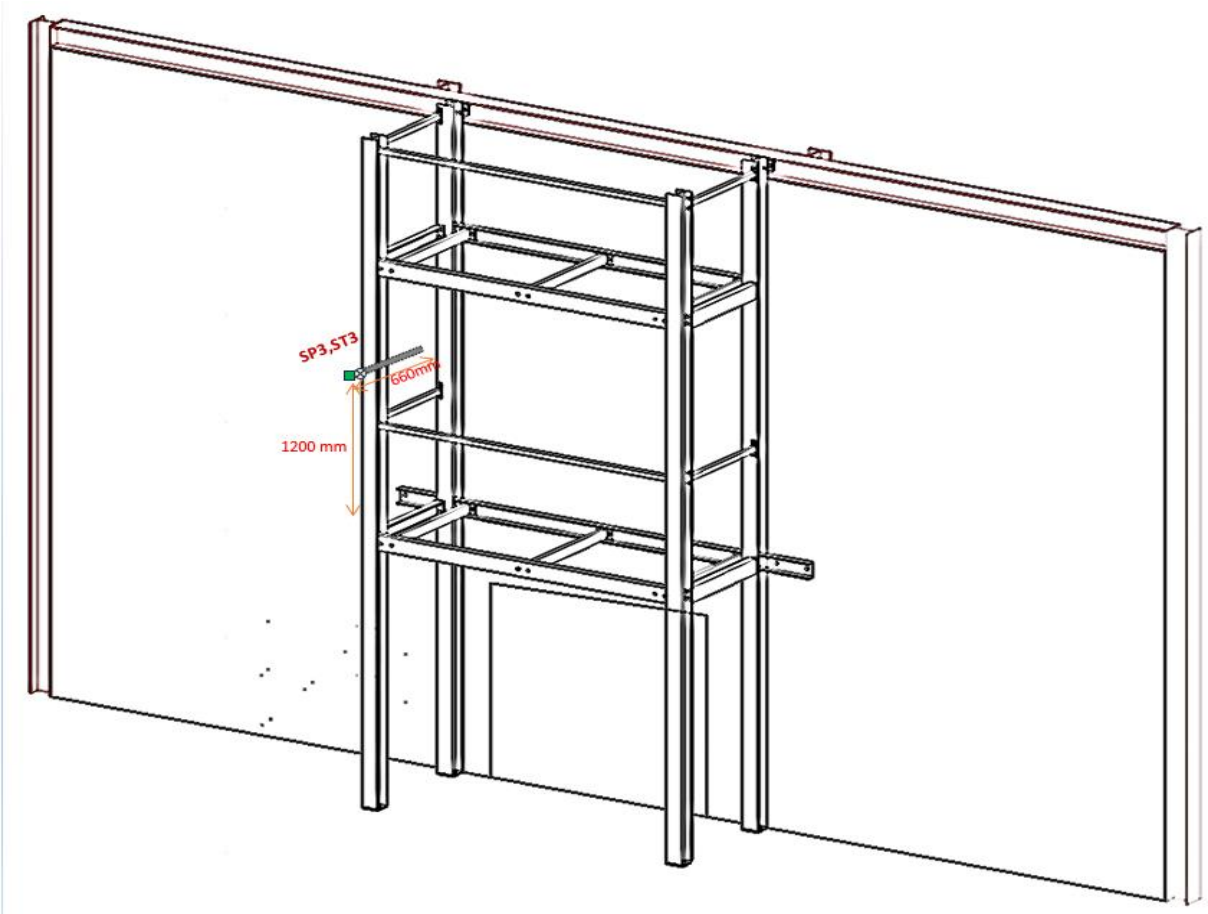

Temperature measured using plate TC on the side edge – 1st floor

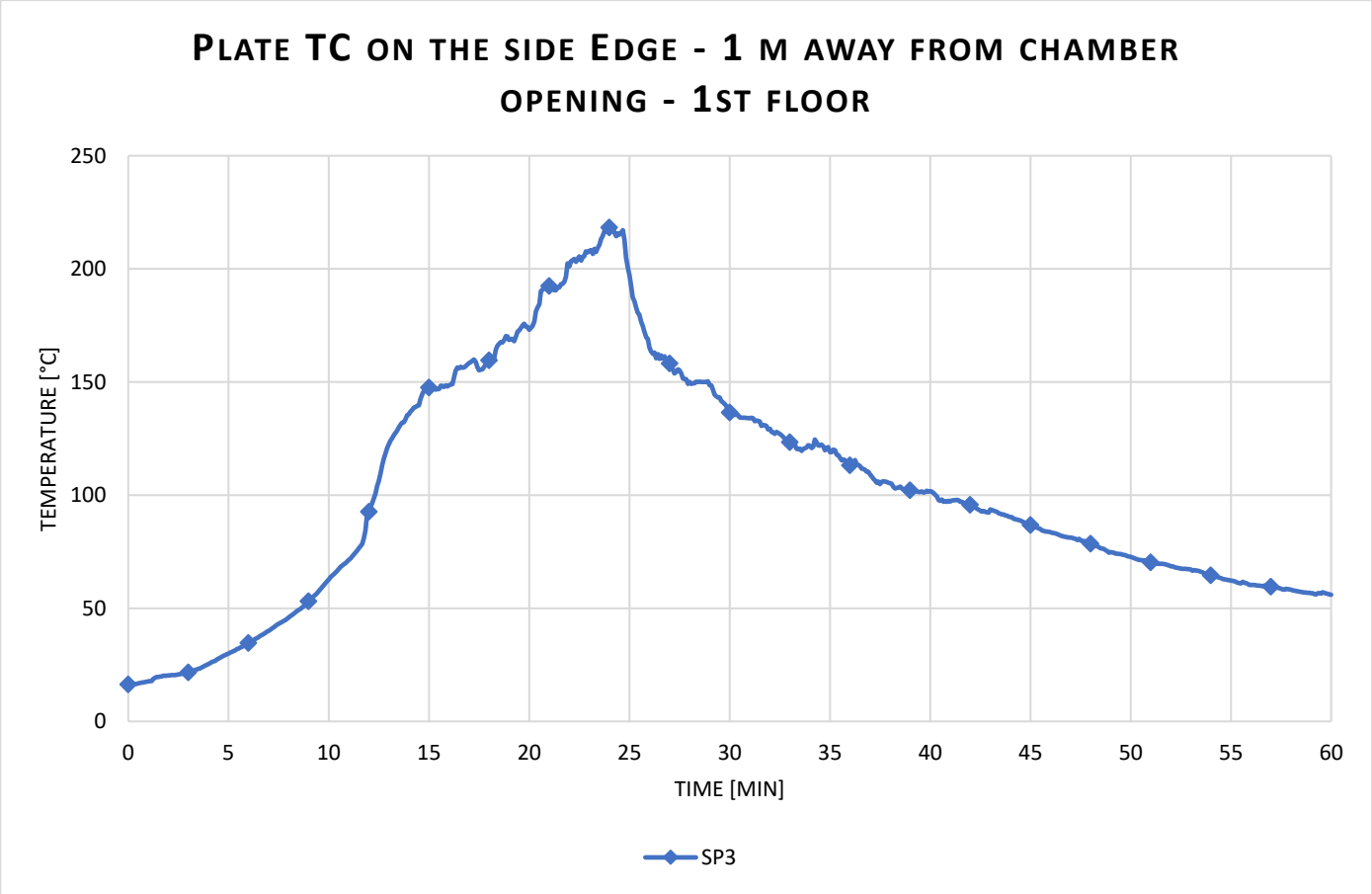

Temperature measured using Inconel on the side edge – 1st floor

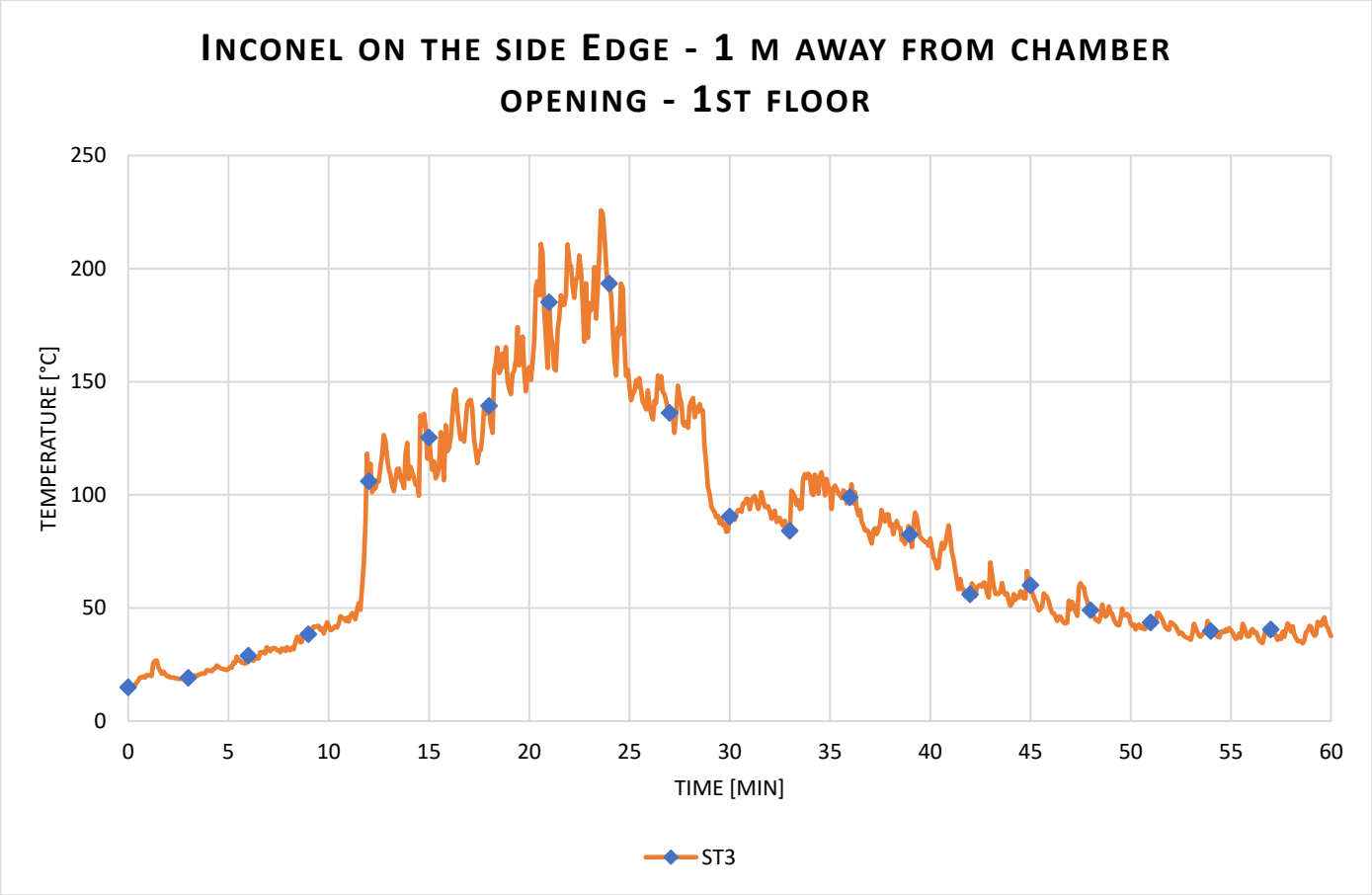

Radiant heat calculated from Plate TC

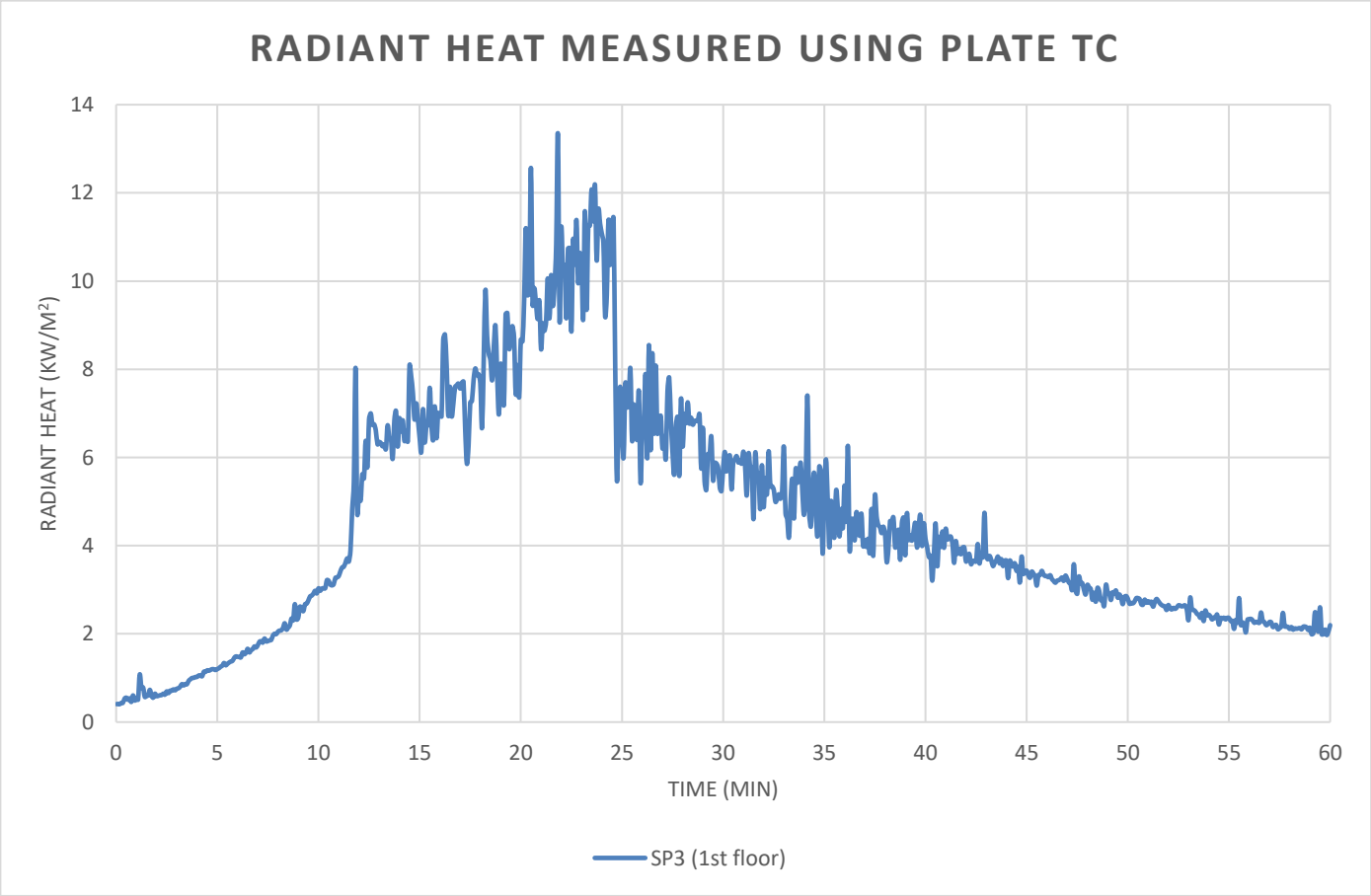

Data measurement from side edges on 2nd Floor (660 mm from wall).

Layout

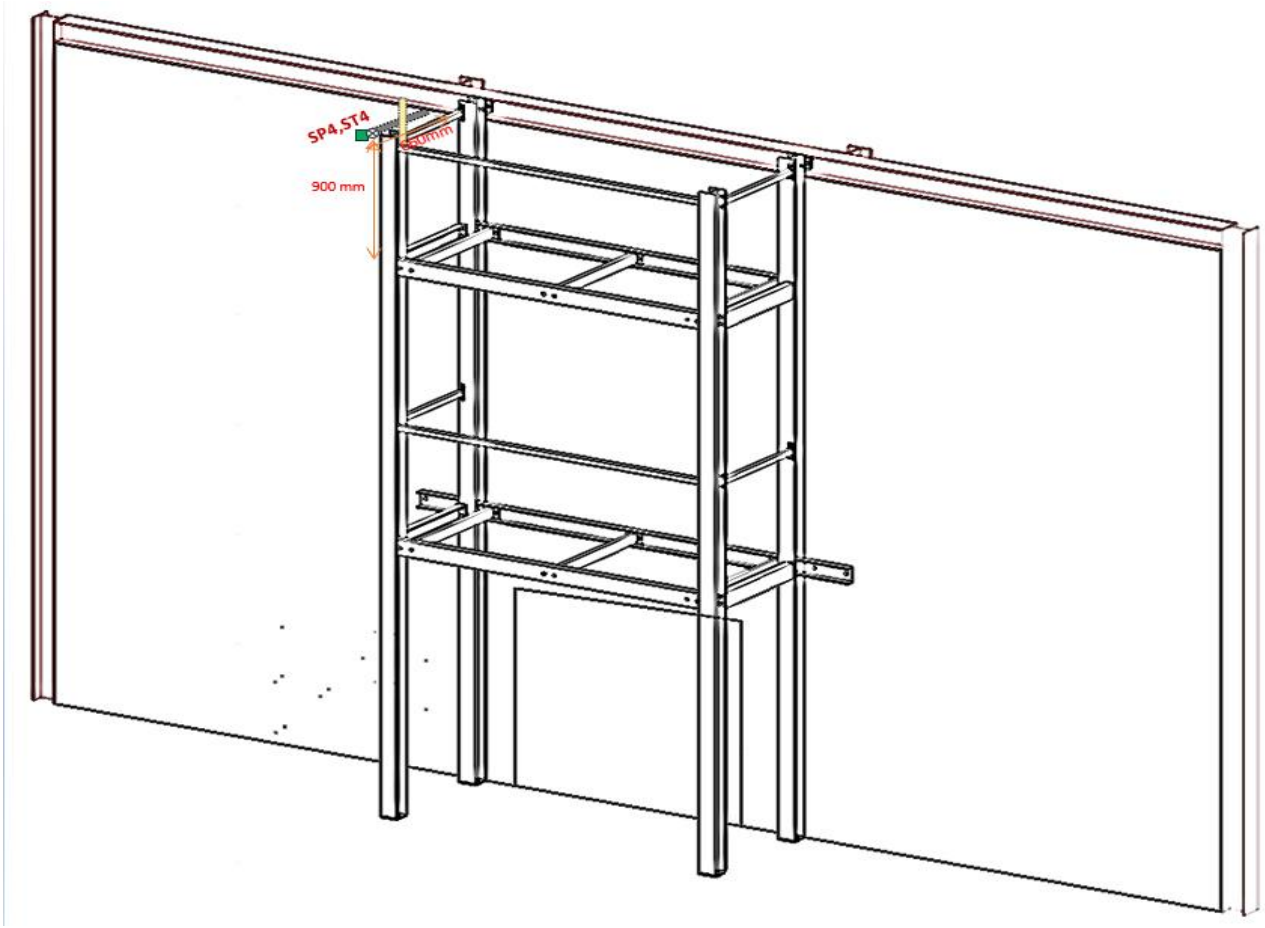

Temperature measured using plate TC's on the side edge – 2nd floor

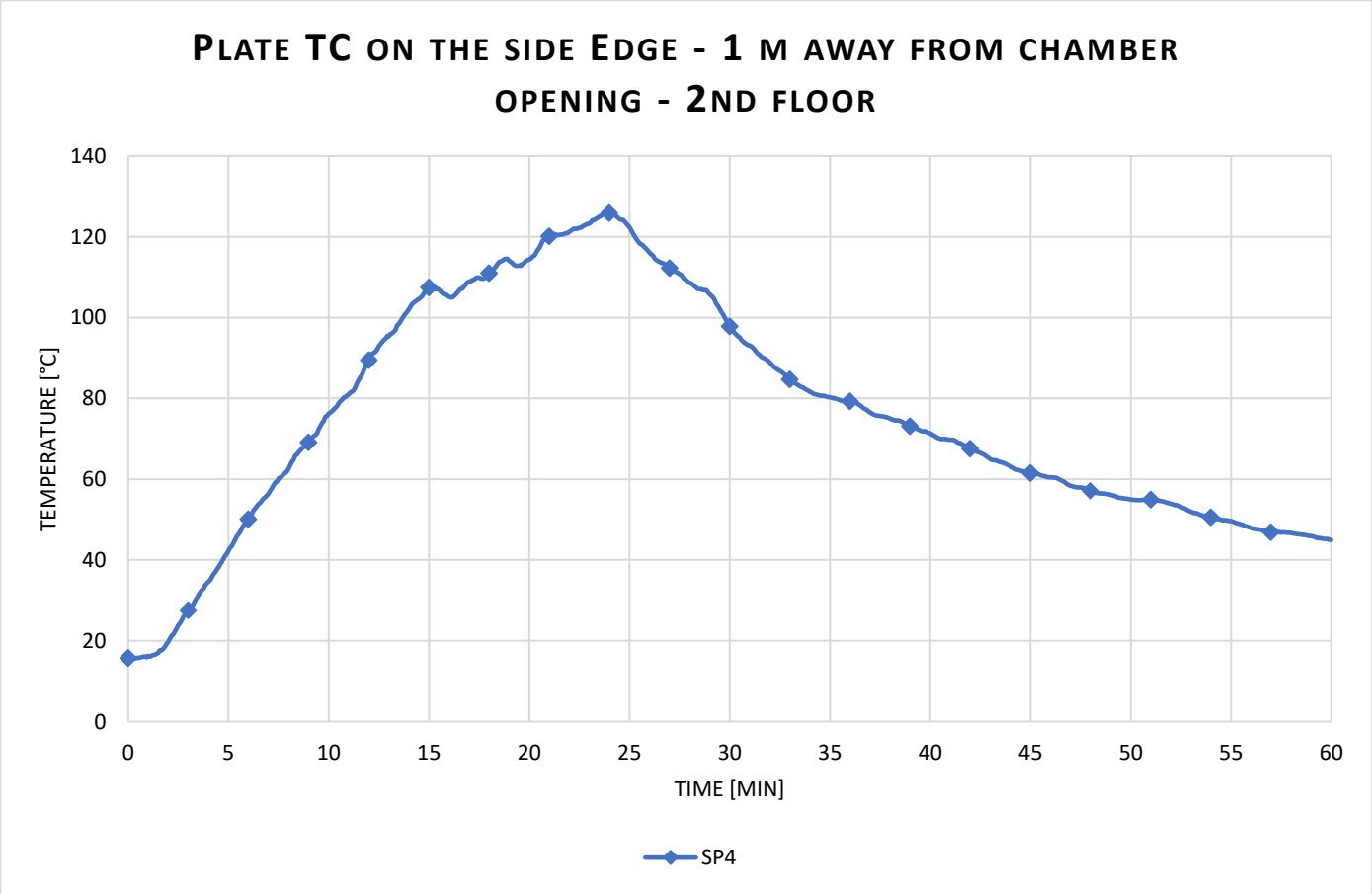

Temperature measured using Inconels on the side edge – 2nd floor

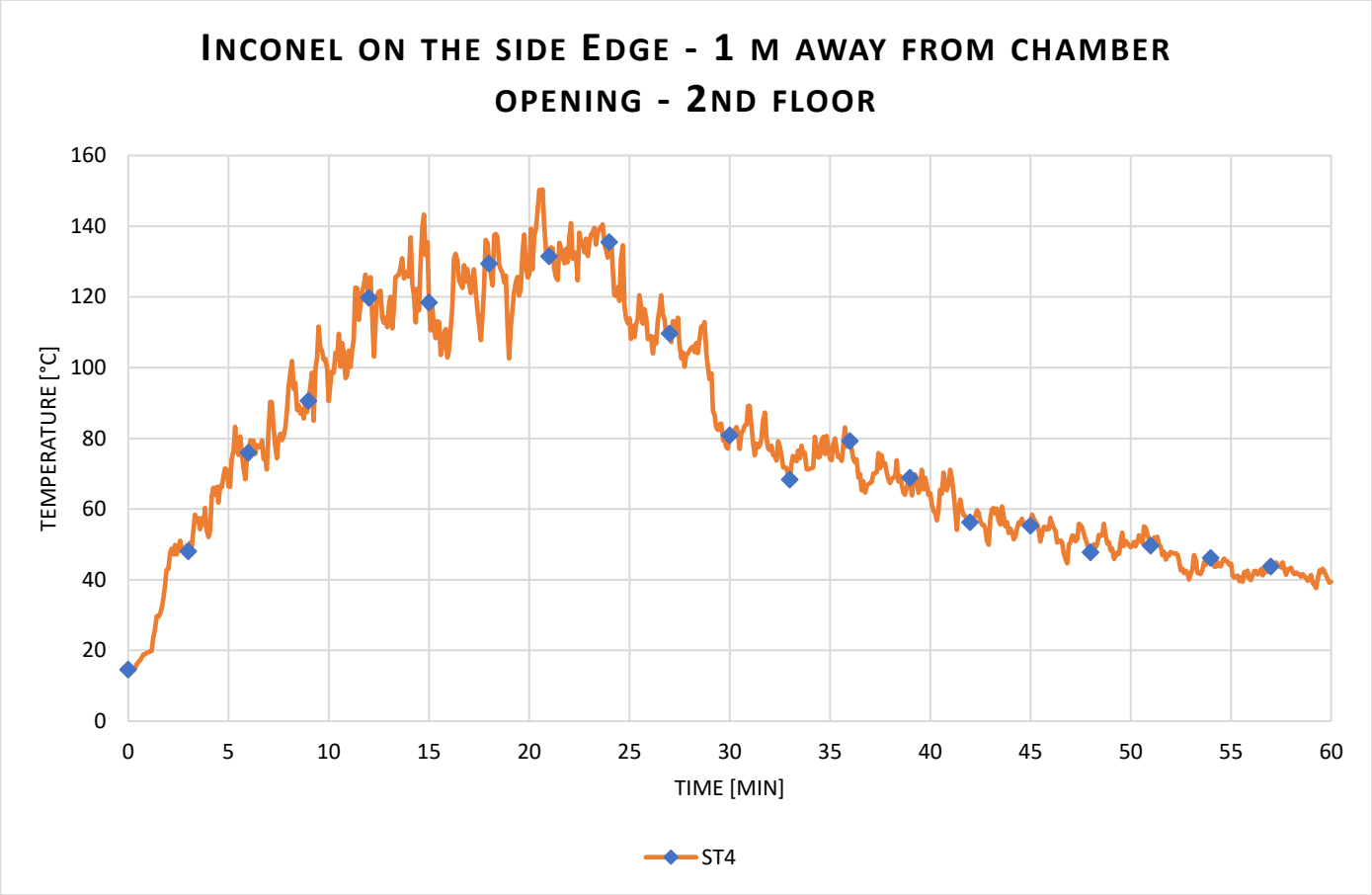

Radiant heat calculated from Plate TC

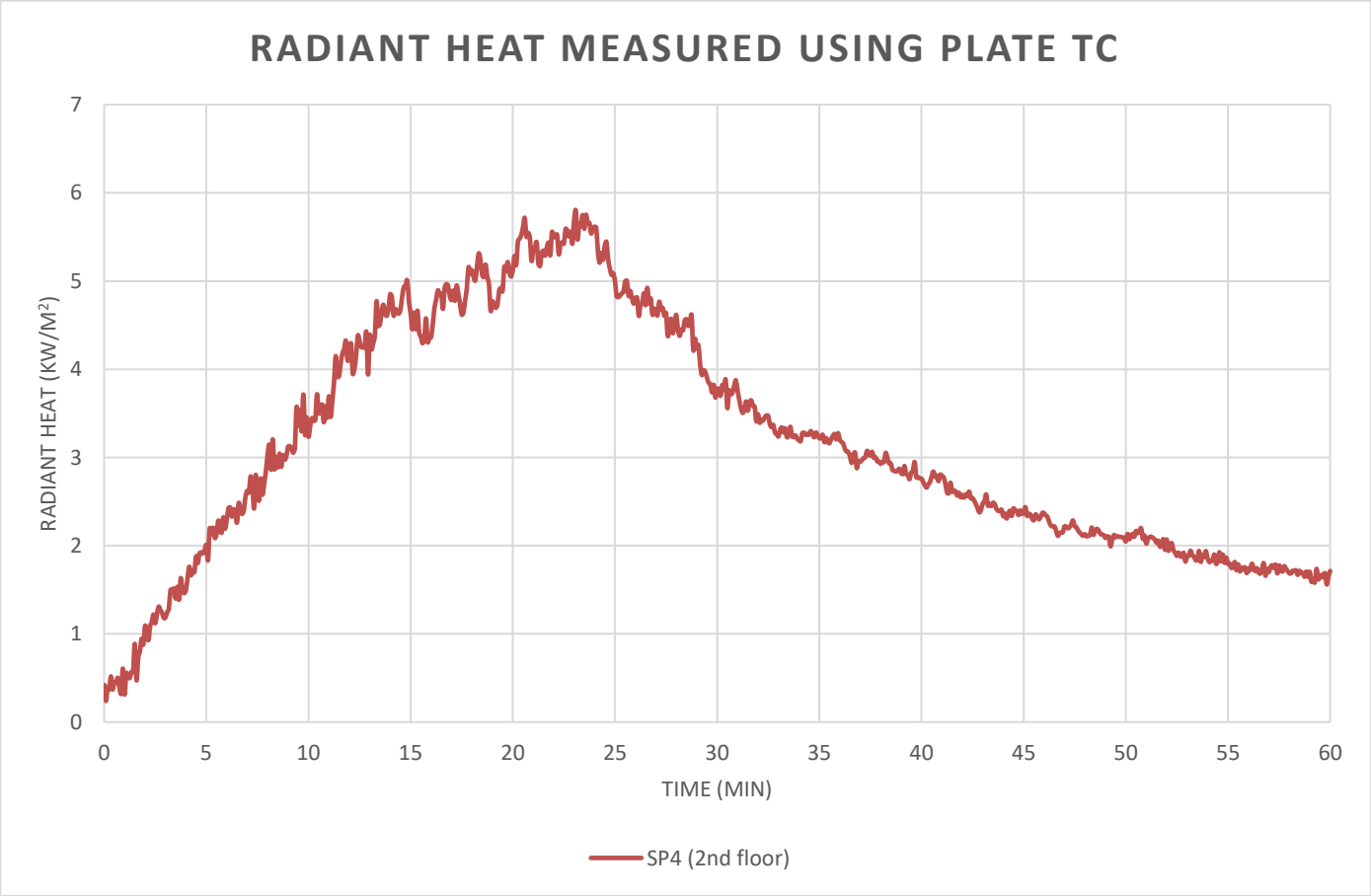

Data measurement from 1st floor wall.

Layout

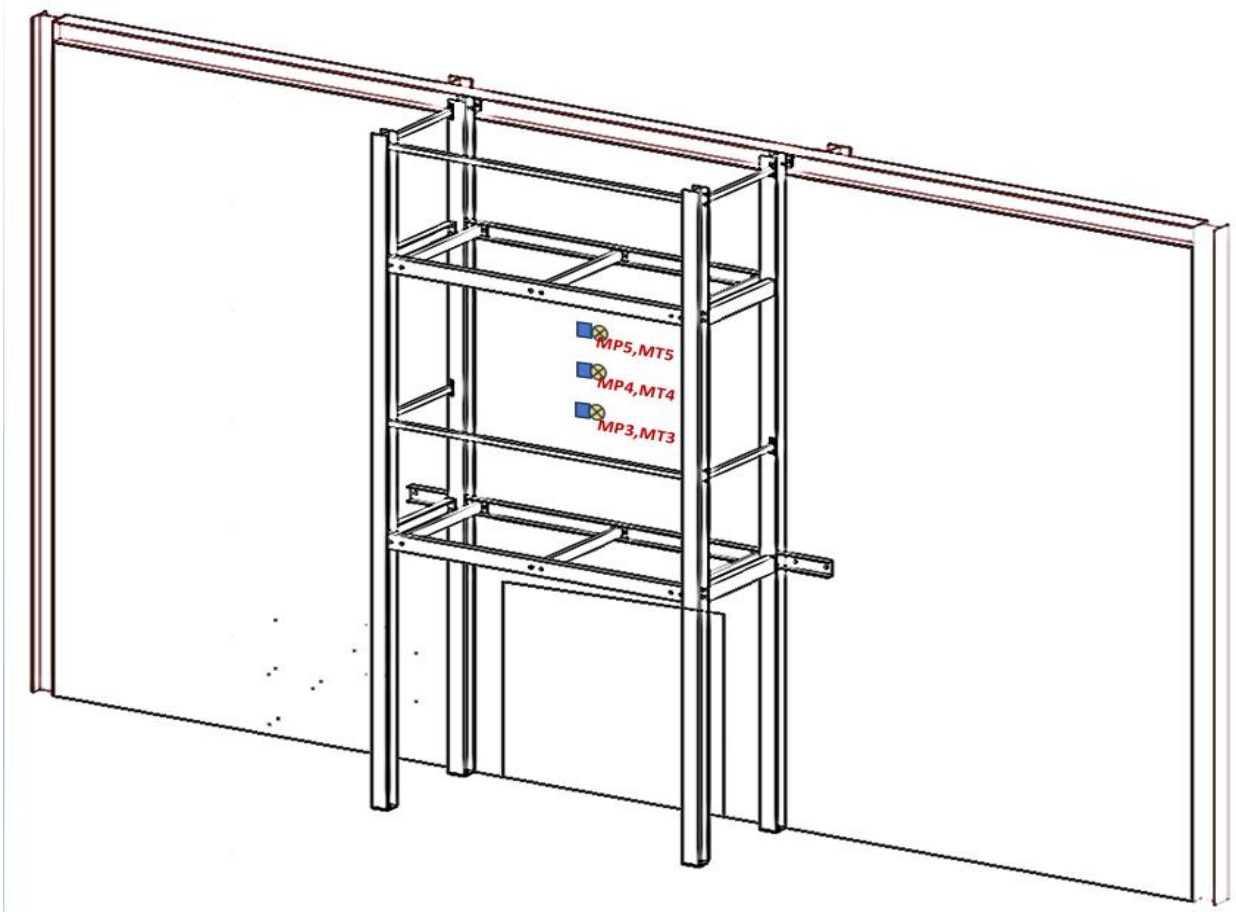

Temperature measured from the Plate TC's on wall at 1st floor

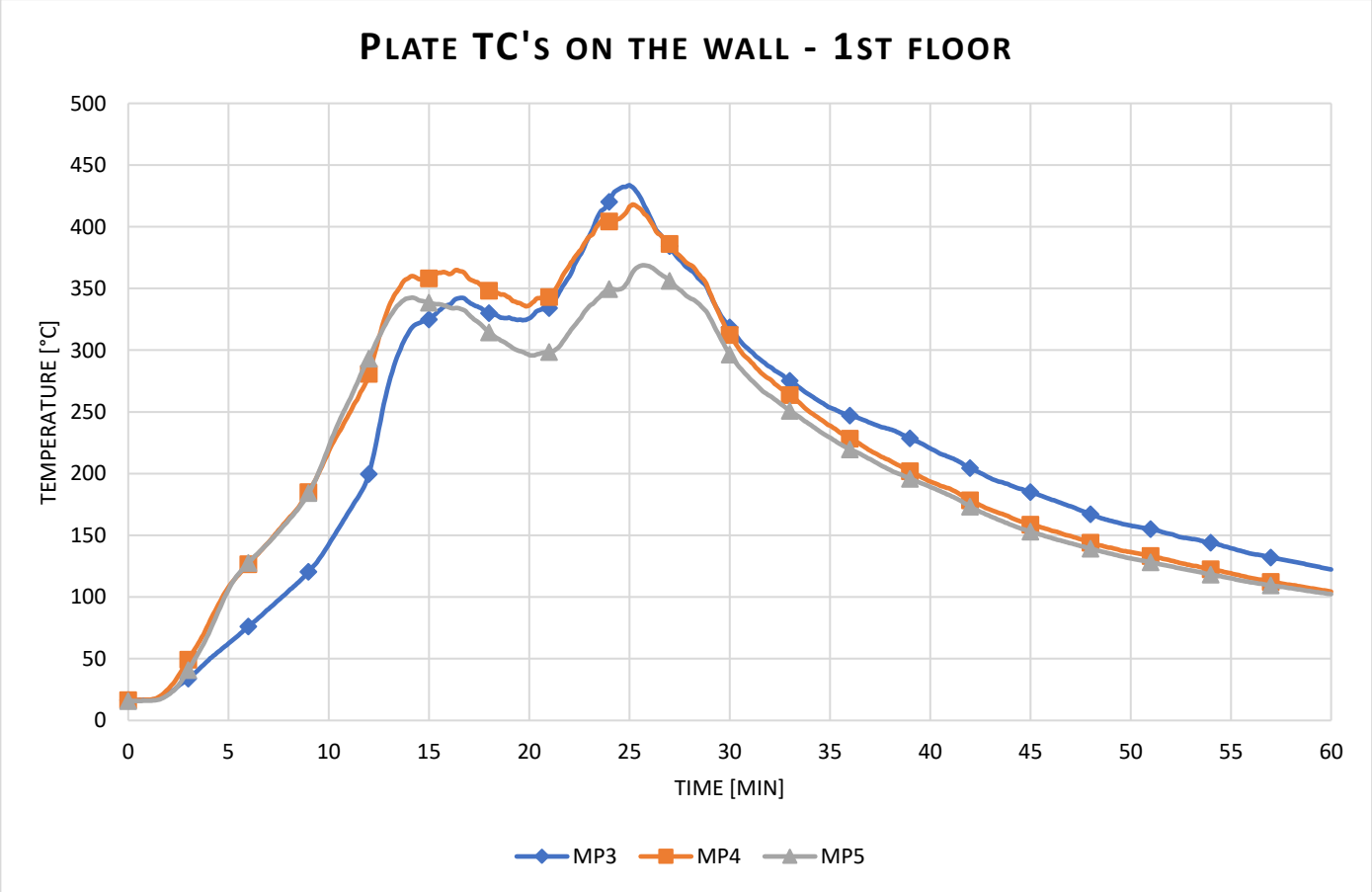

Temperature measured from the Inconels on wall at 1st floor

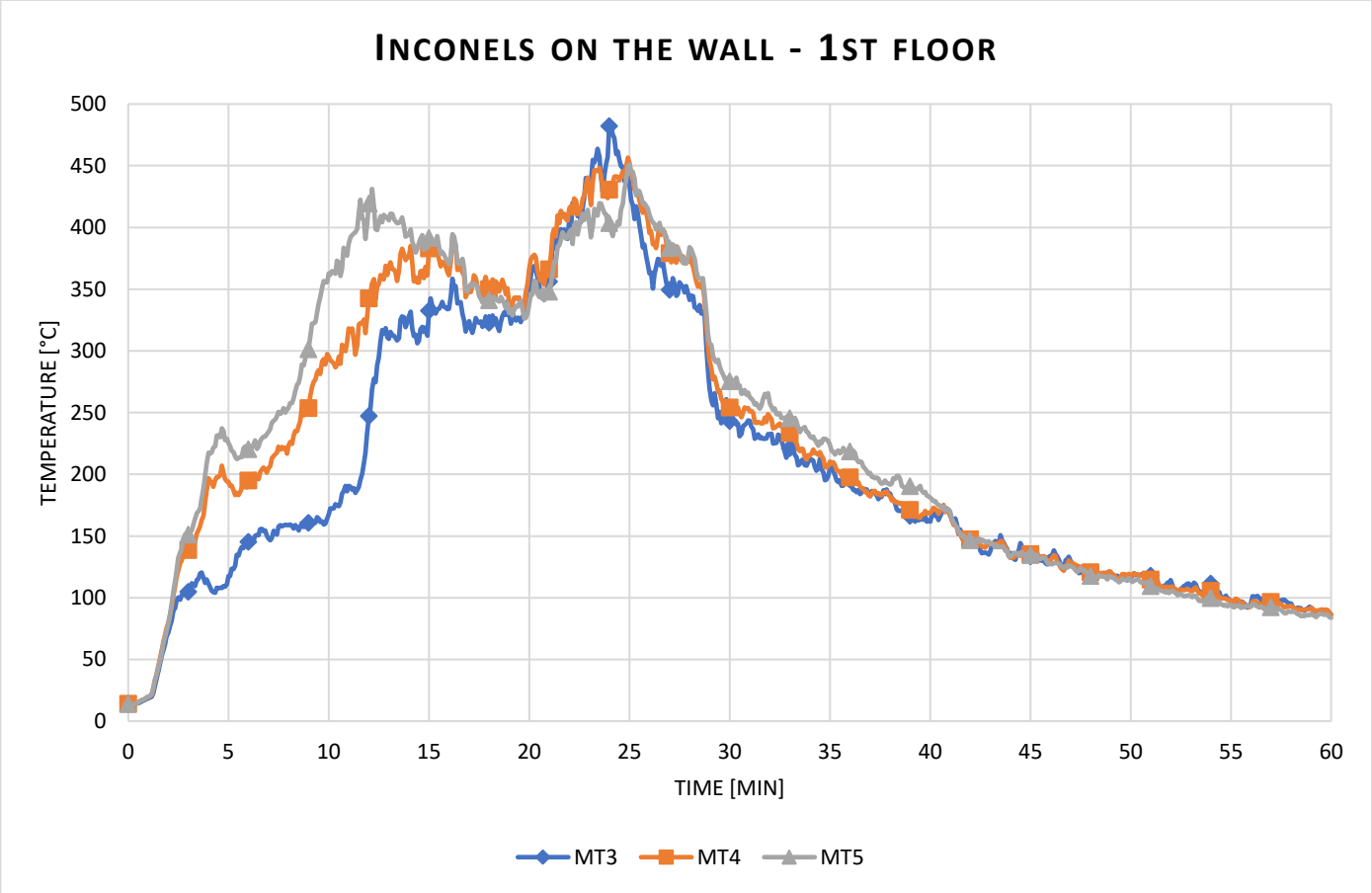

Radiant heat calculated from Plate TC

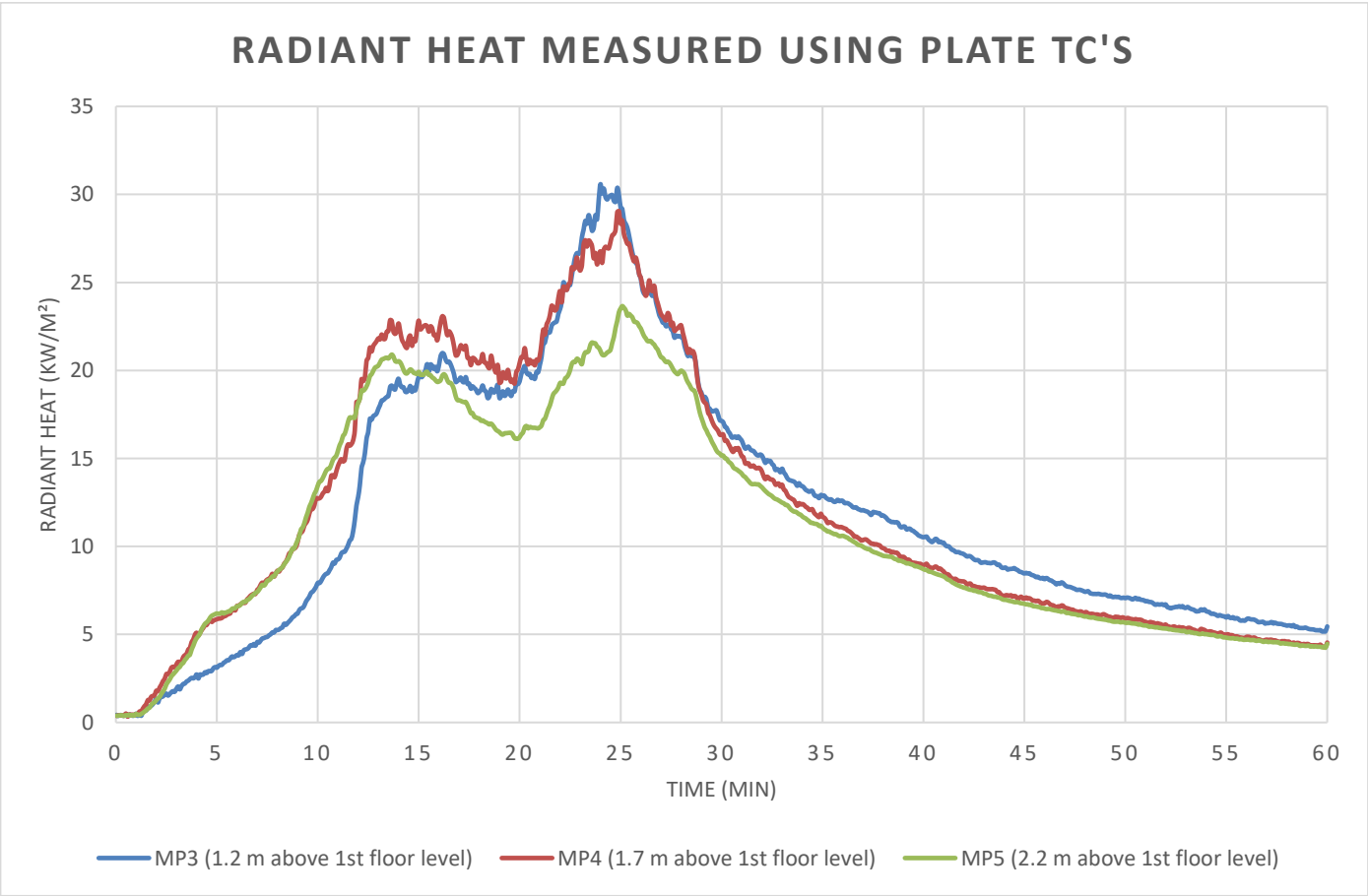

Data measurement from 2nd floor wall.

Layout

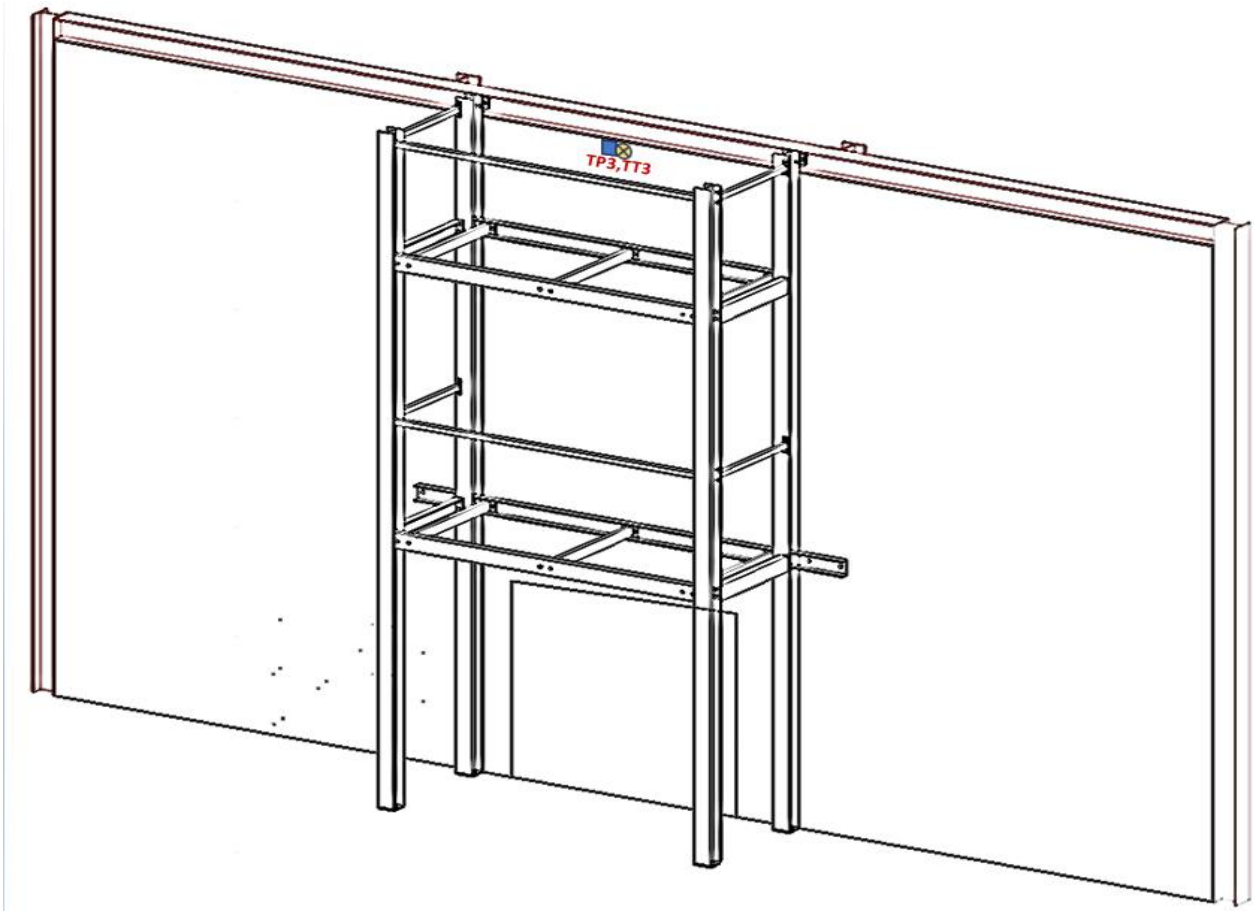

Temperature measured from Plate TC on the wall at 2nd floor

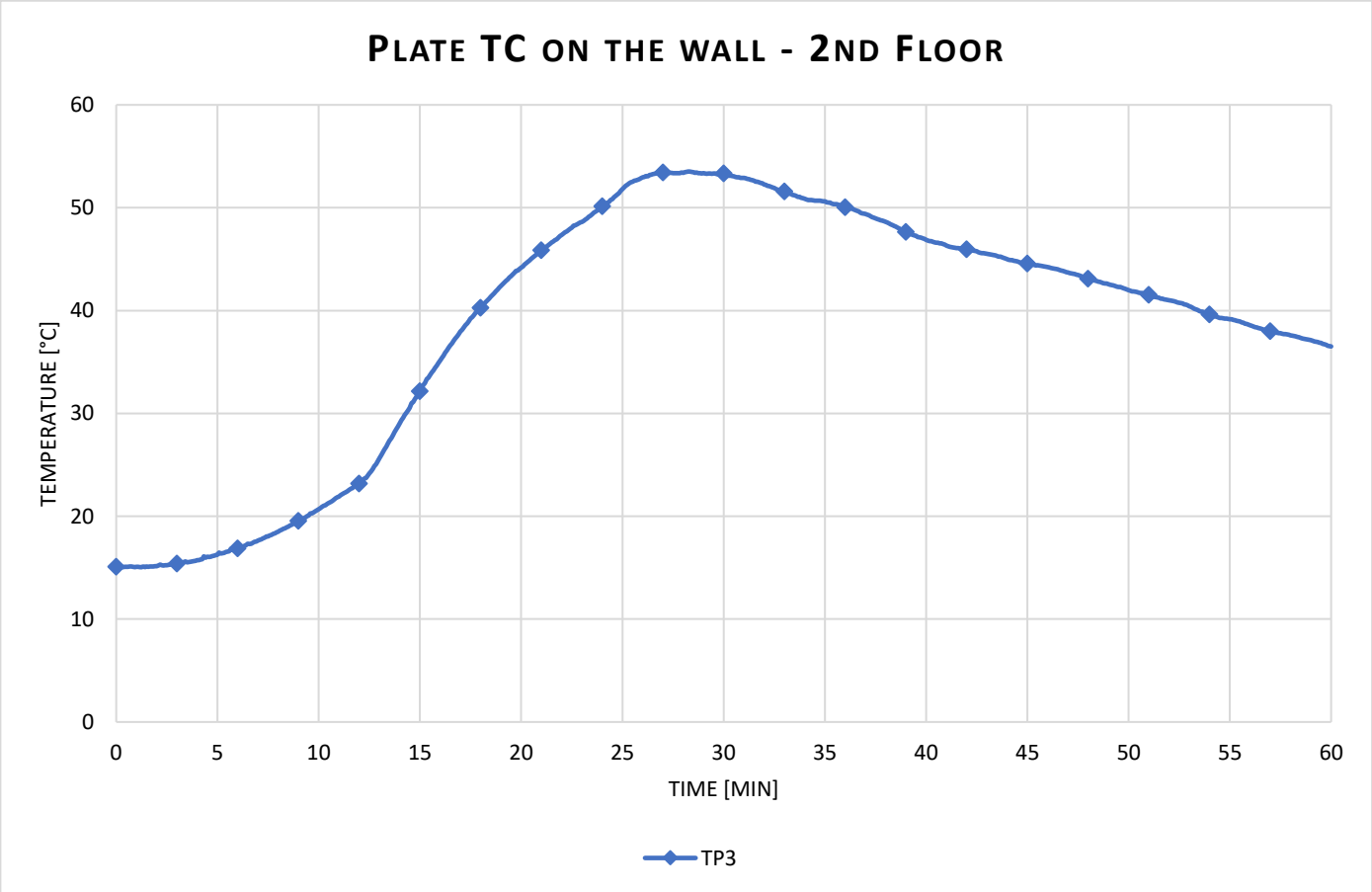

Temperature measured from Inconel on the wall at 2nd floor

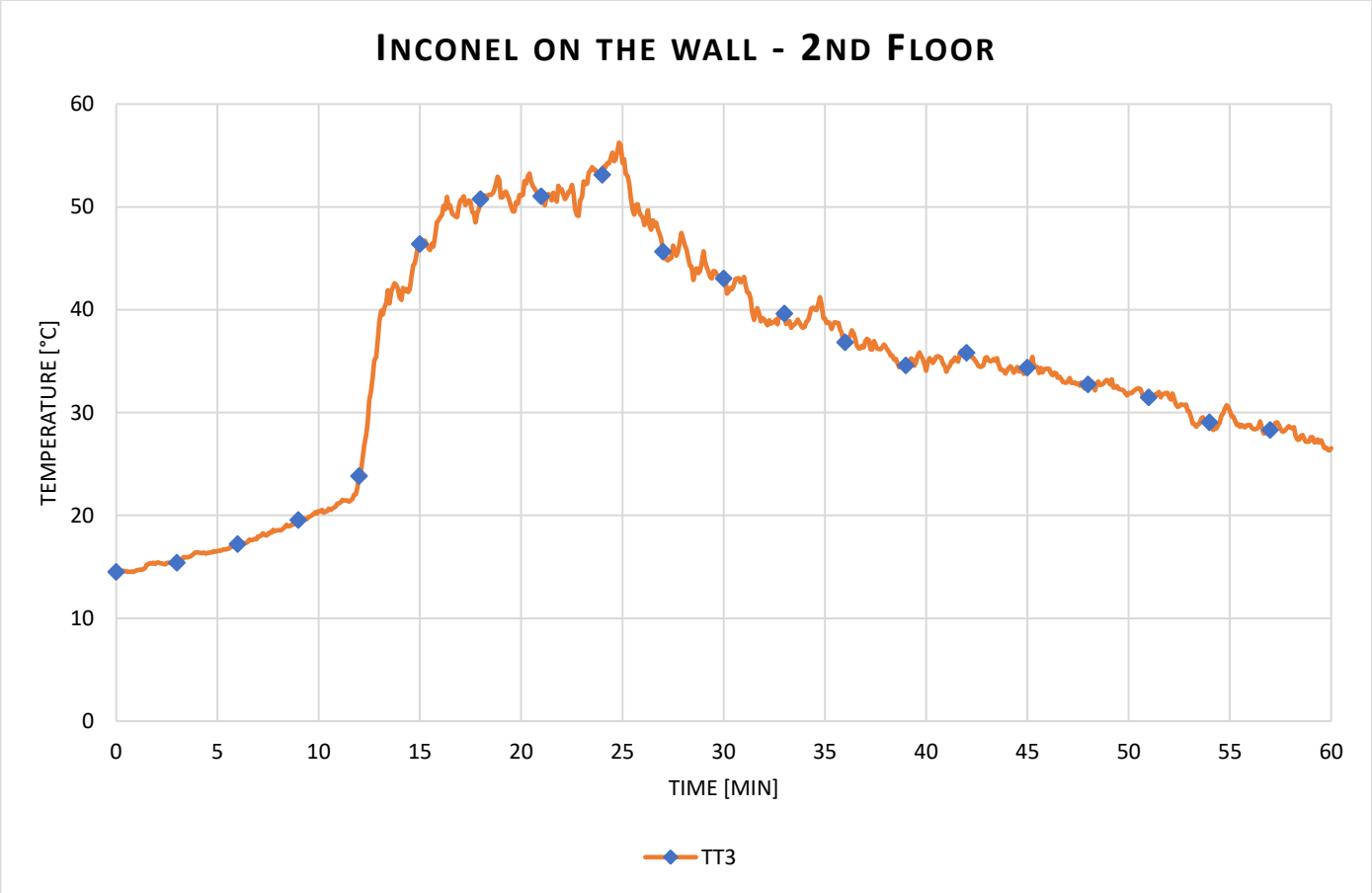

Radiant heat calculated from Plate TC

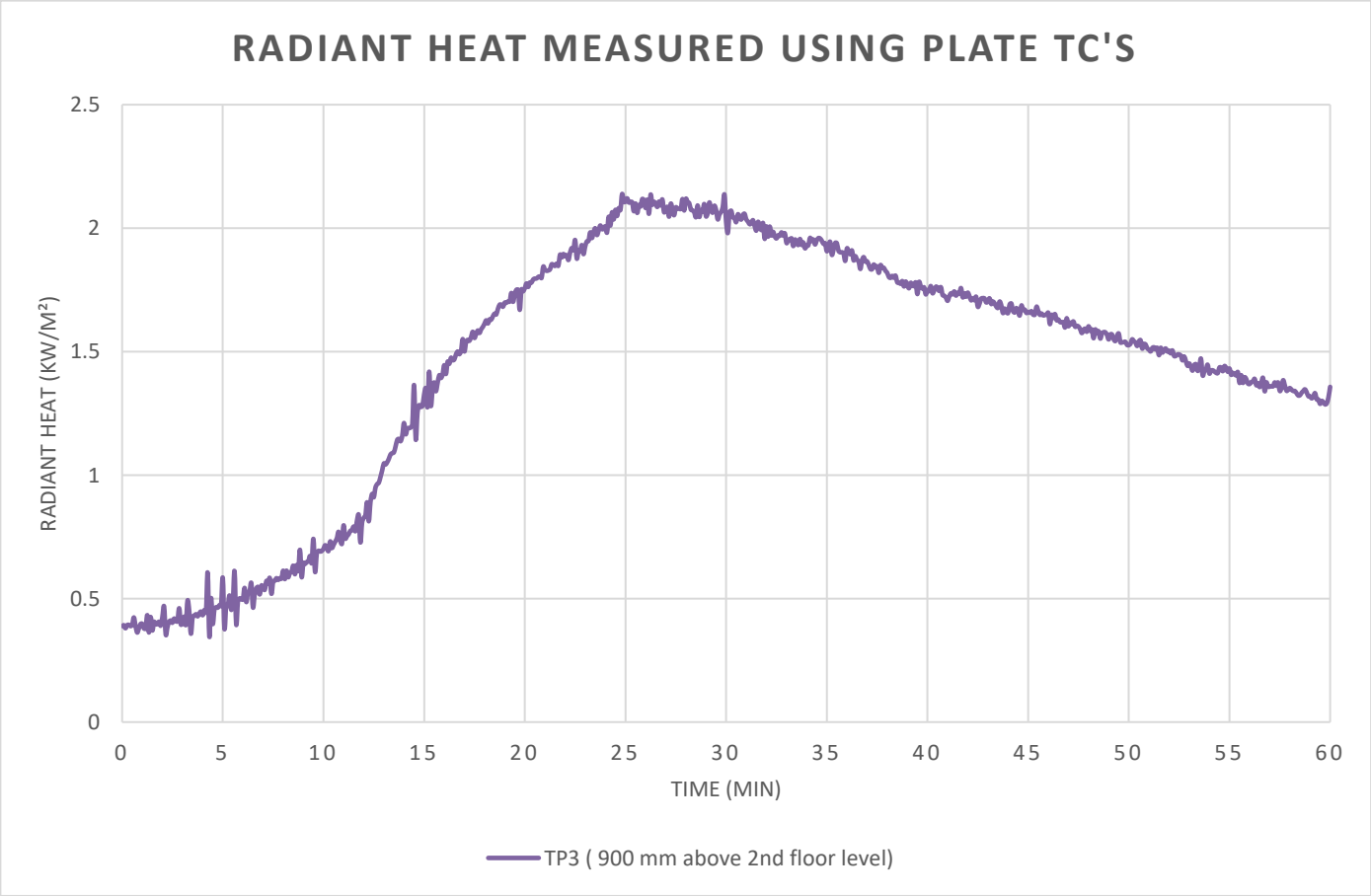

Data measurement from 1st floor exposed edge.

Layout

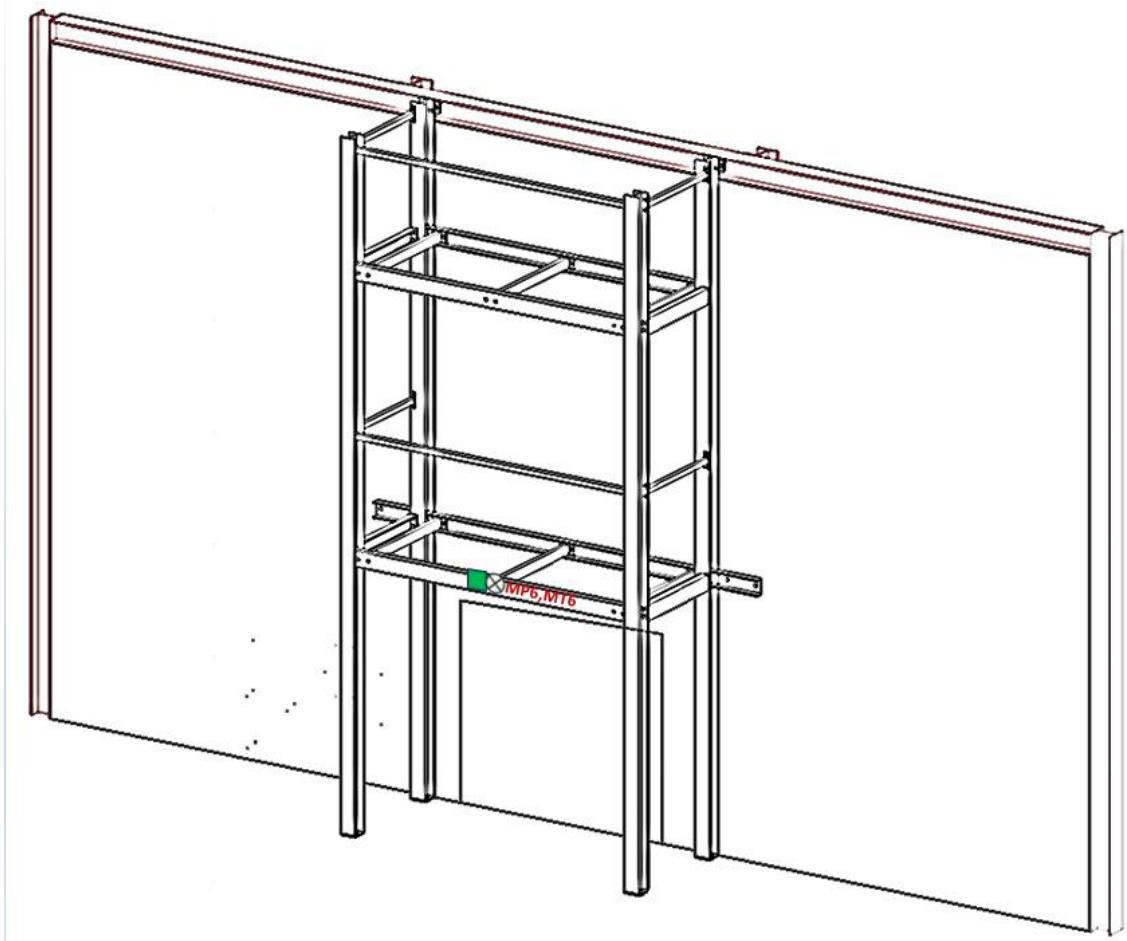

Temperature measured using plate TC 1st floor exposed edge

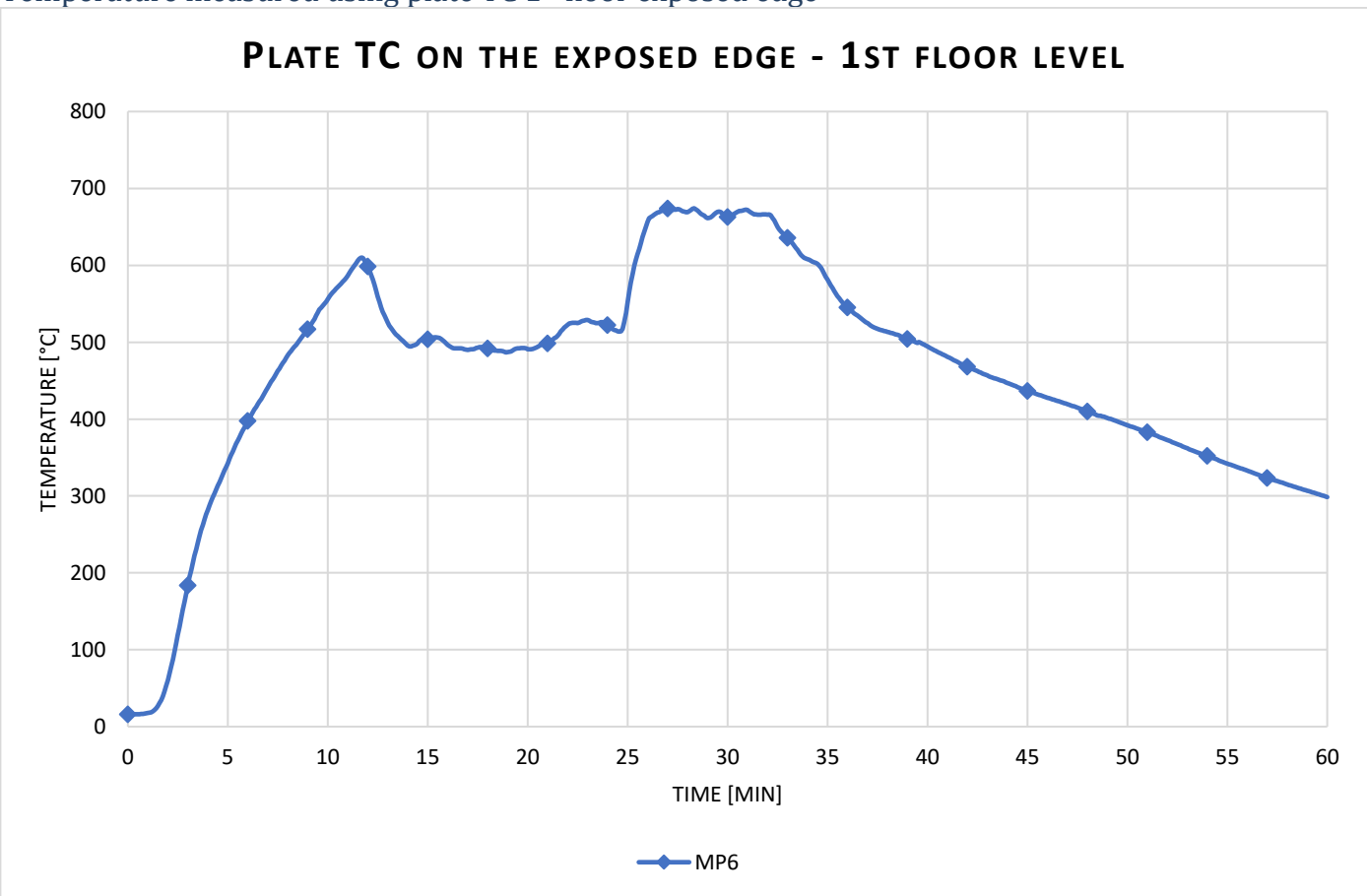

Temperature measured using plate Inconel 1st floor exposed edge

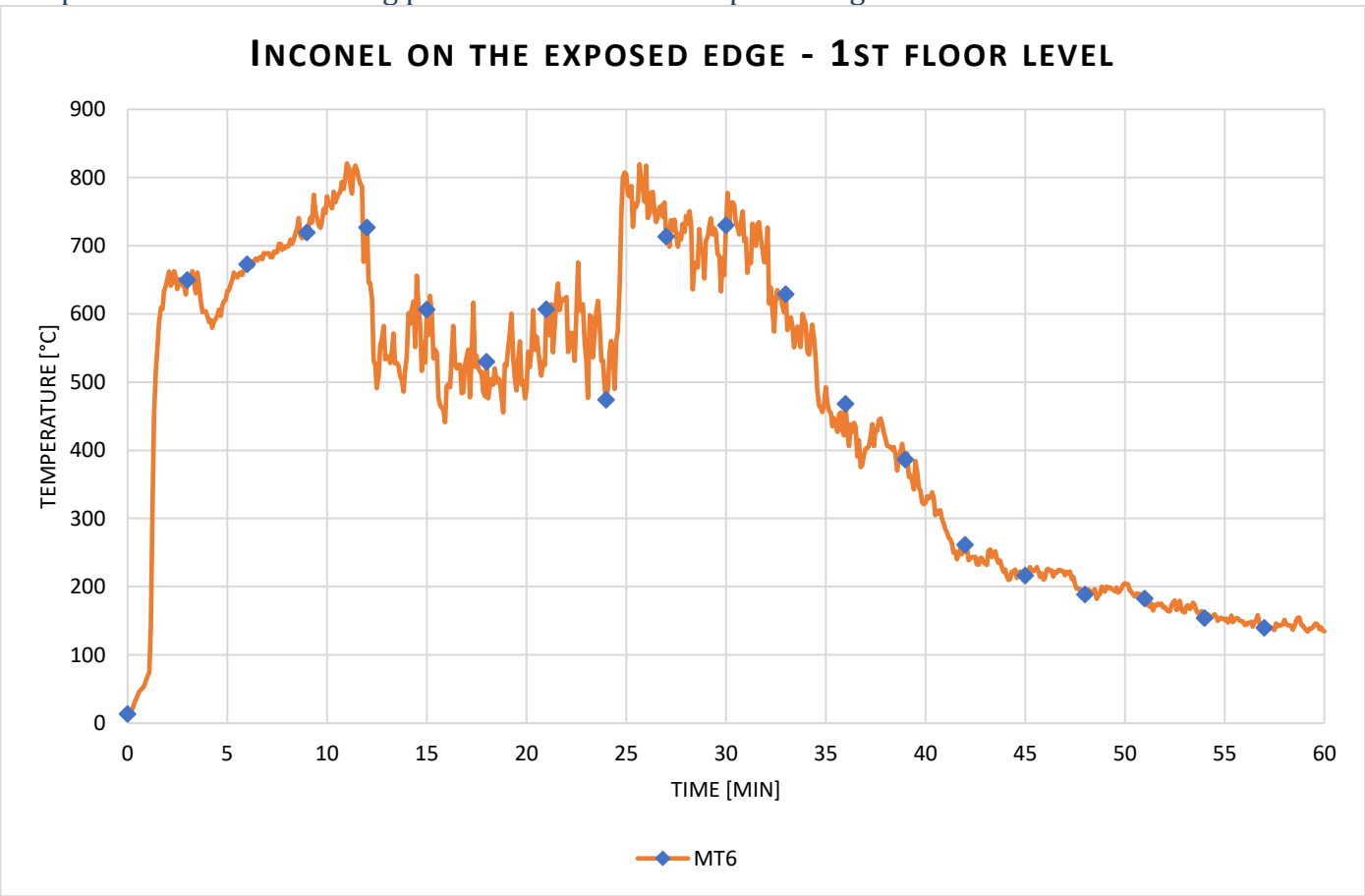

Radiant heat calculated from Plate TC

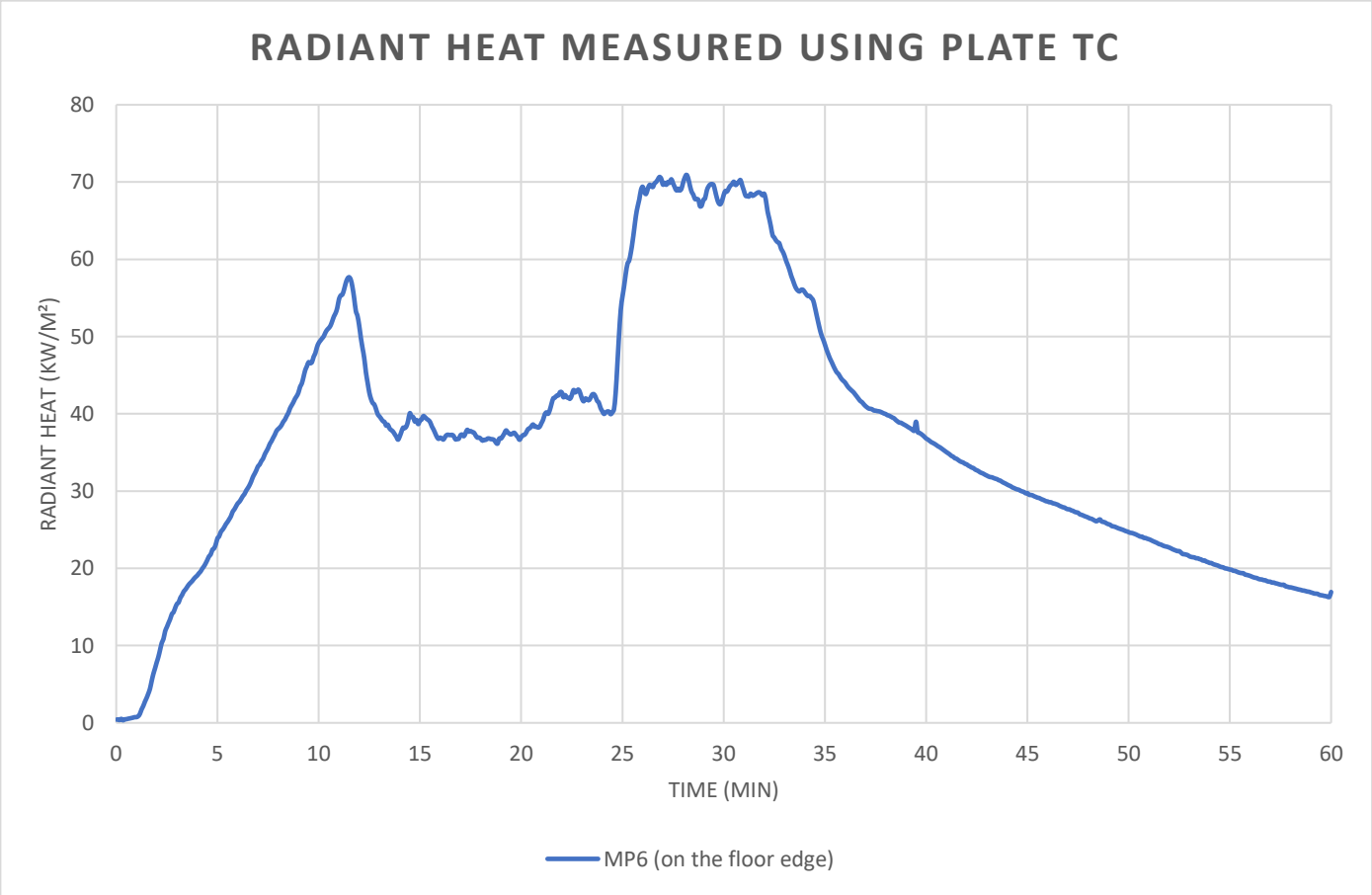

Data measurement from 1st floor exposed edge.

Layout

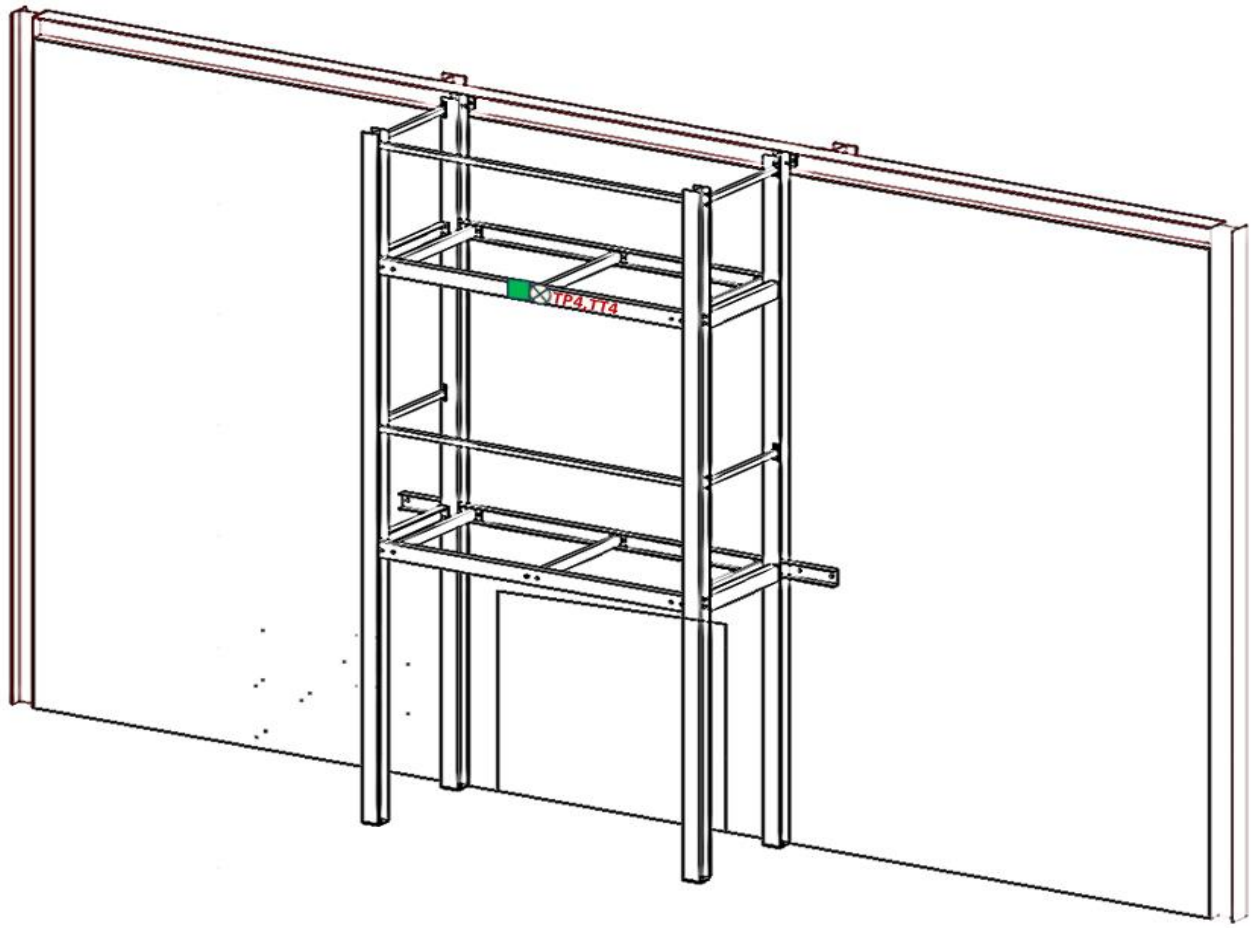

Temperature measured from the Plate TC on exposed edge at 2nd floor

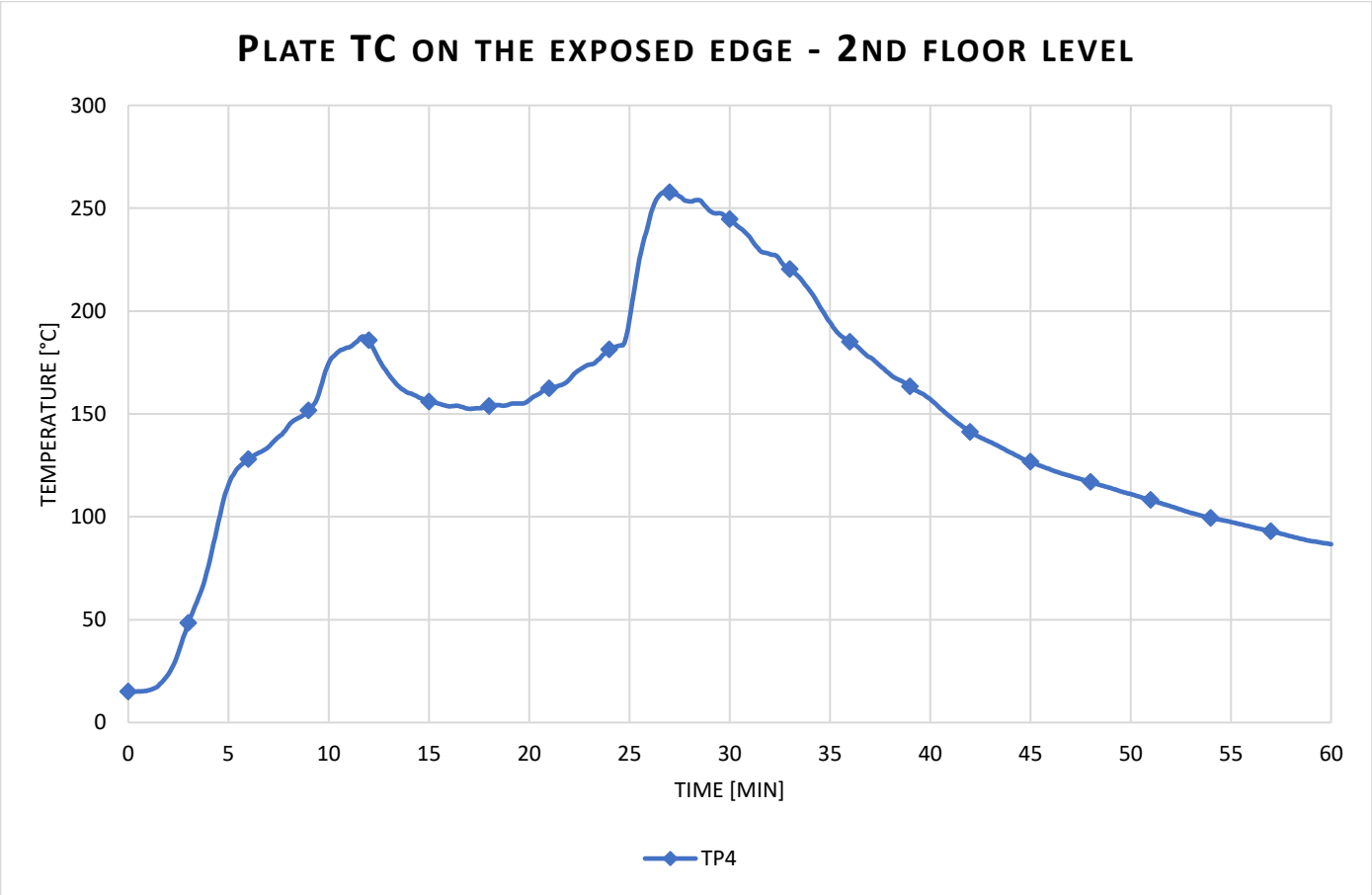

Temperature measured from the Inconel on exposed edge at 2nd floor

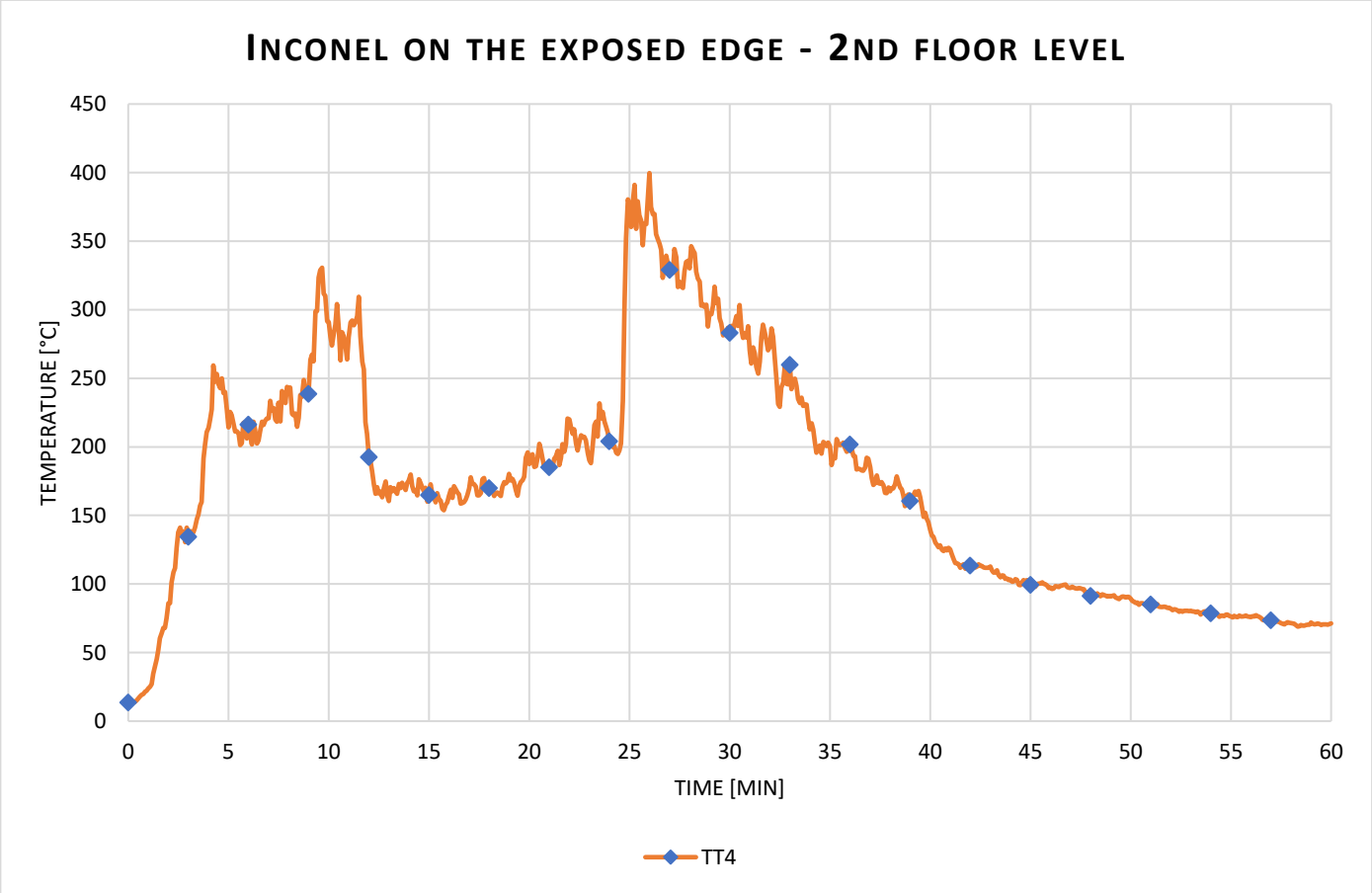

Radiant heat calculated from Plate TC

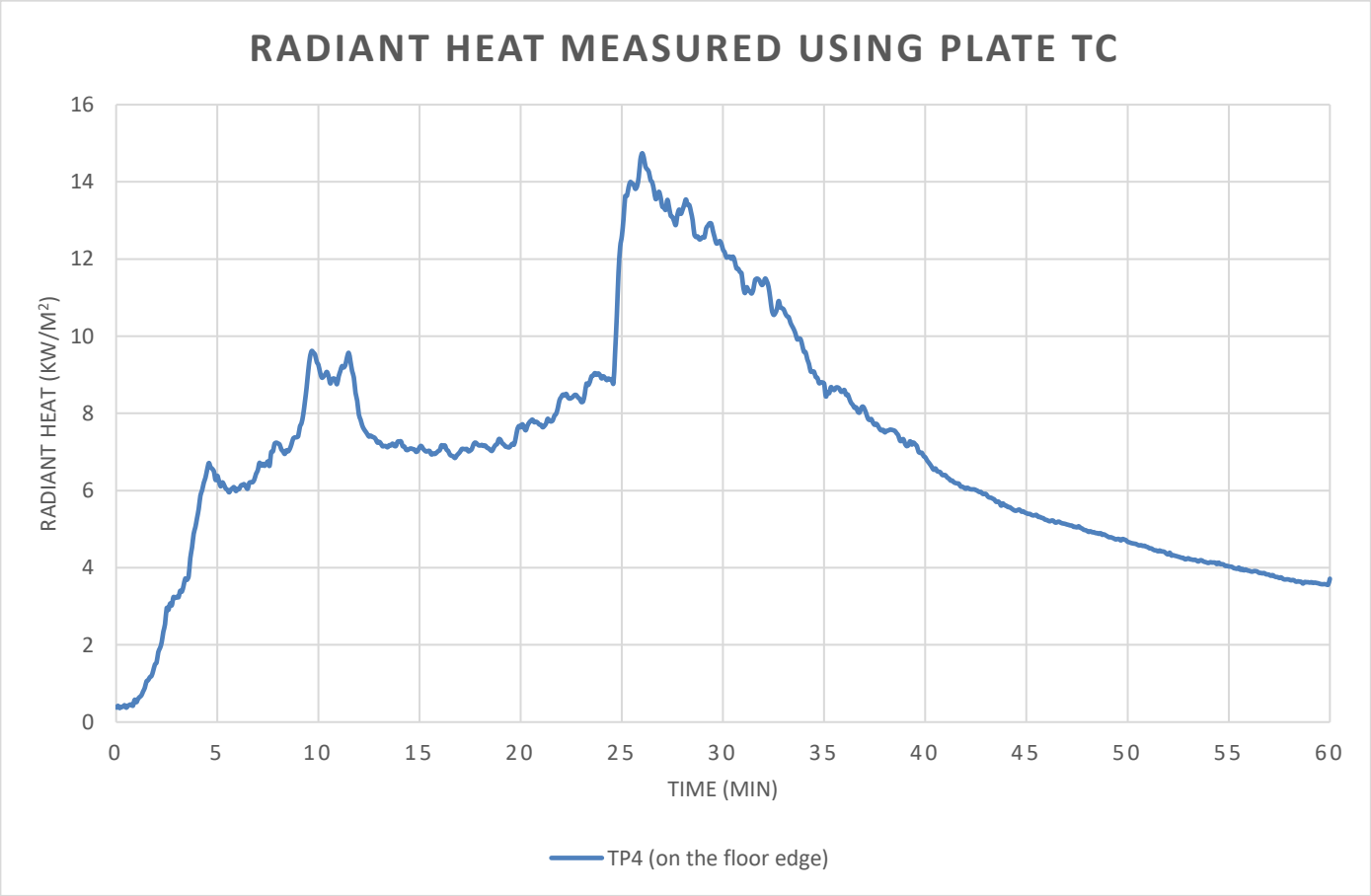

Data measurement from 1st floor handrails.

Layout

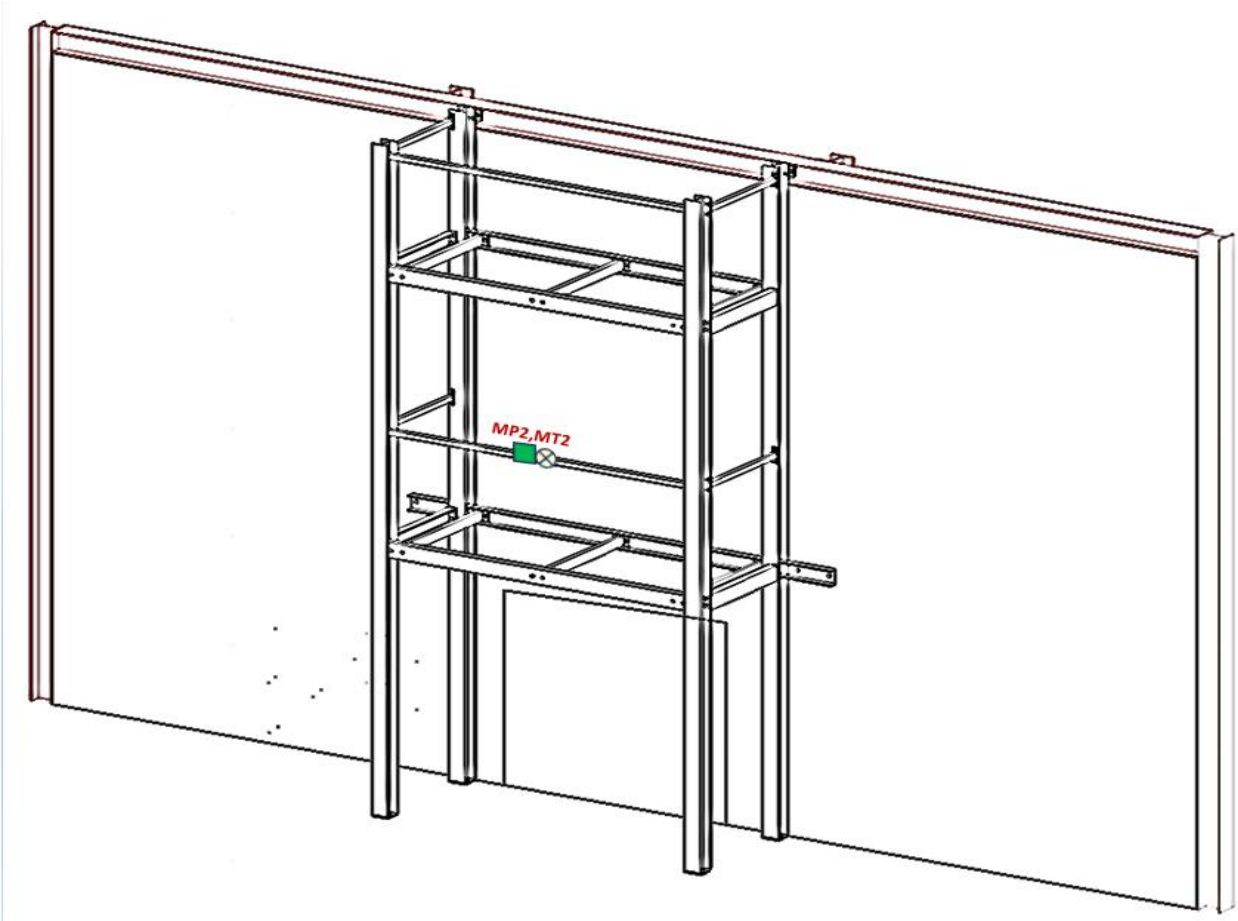

Temperature measured from the Plate TC on 1st floor handrails

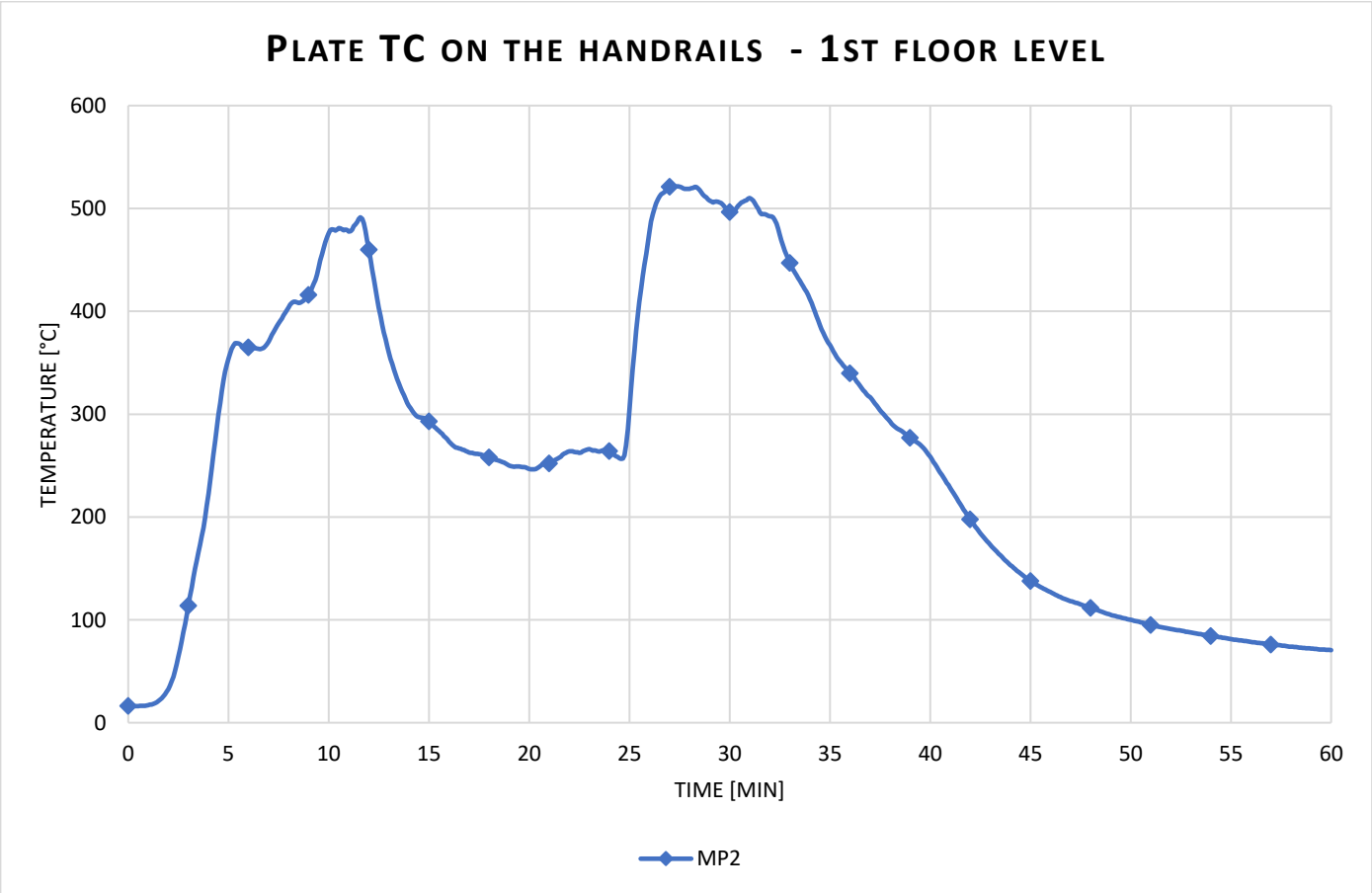

Temperature measured from the Inconel on 1st floor handrails

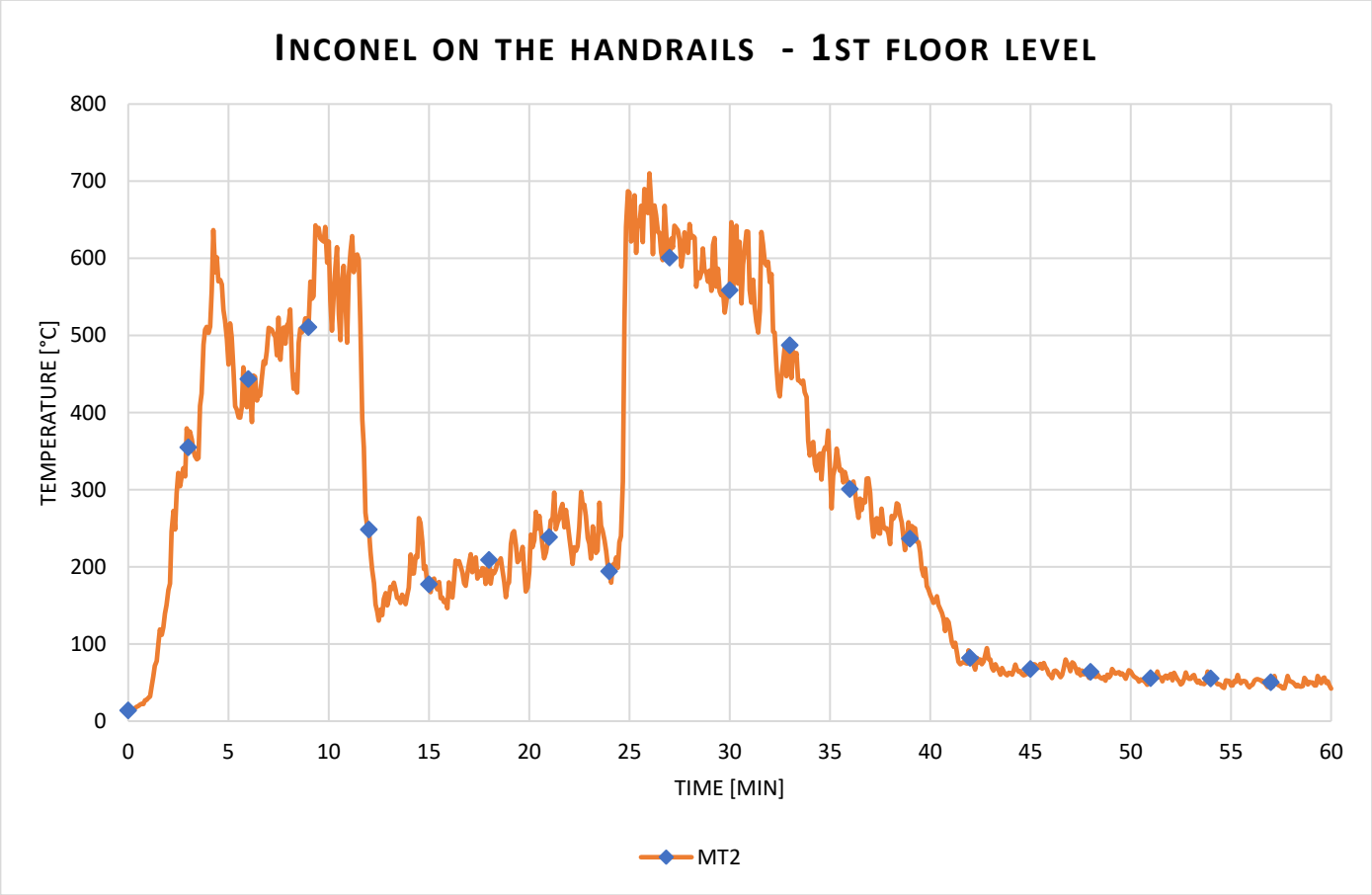

Radiant heat calculated from Plate TC

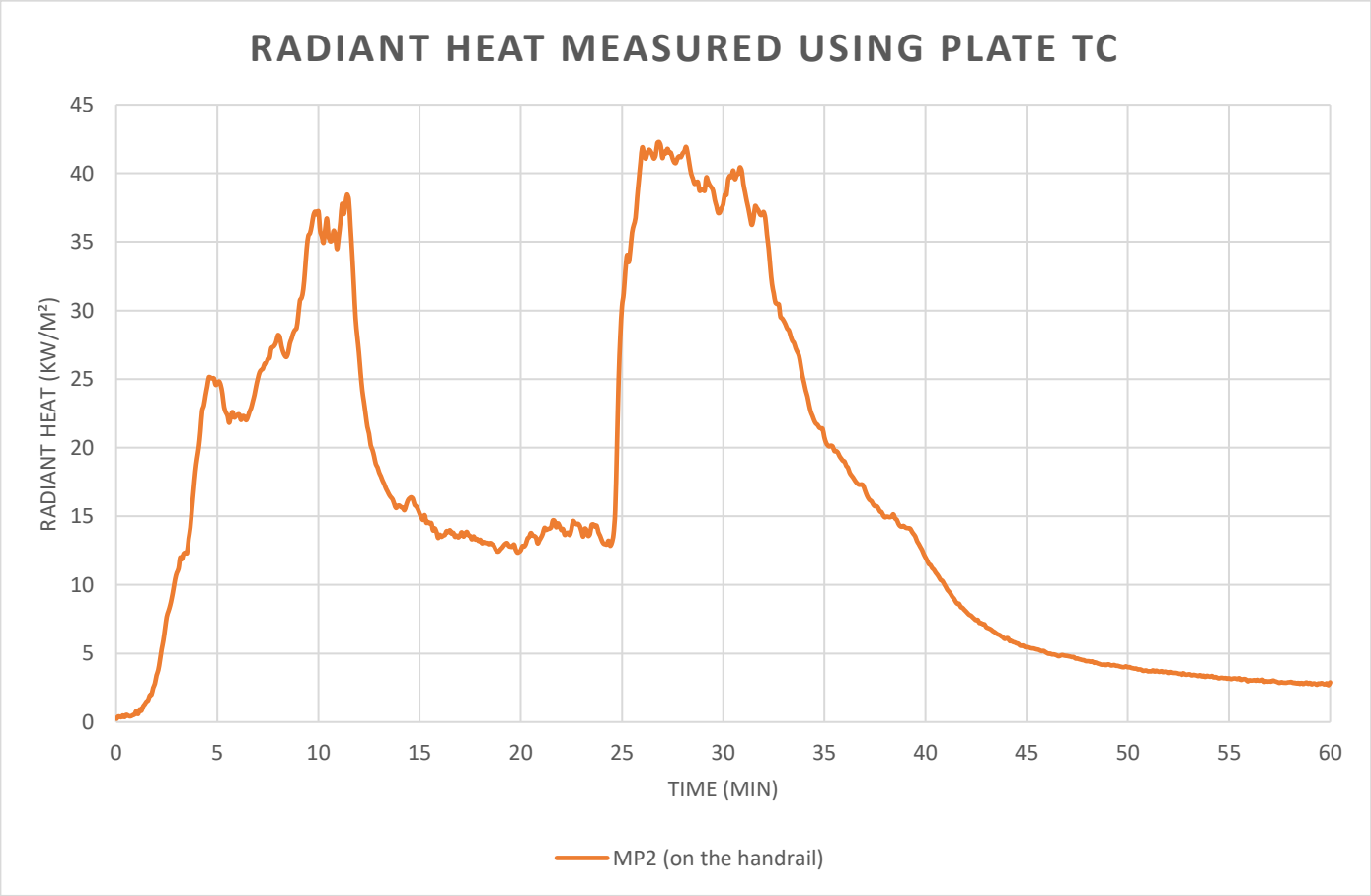

Data measurement from 2nd floor handrails.

Layout

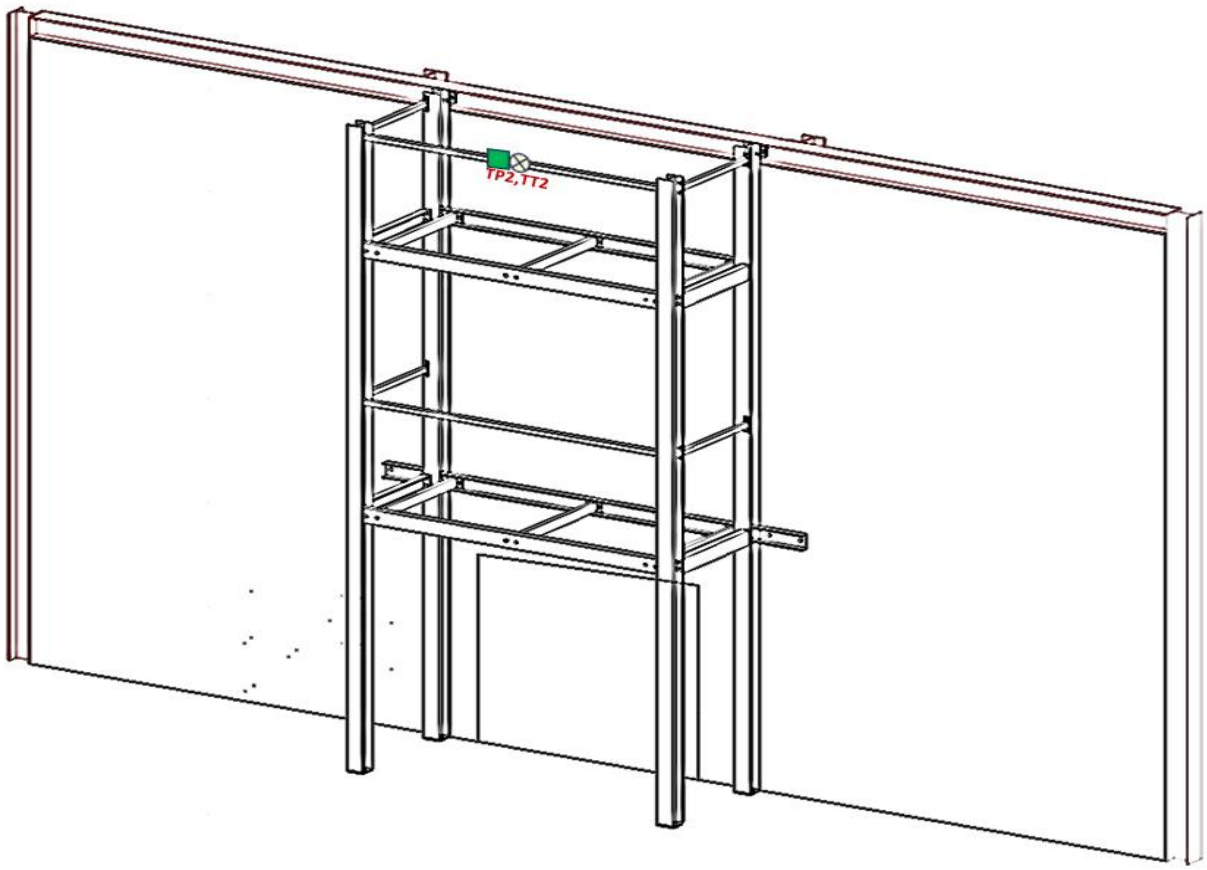

Temperature measured from the Plate TC on 2nd floor handrails.

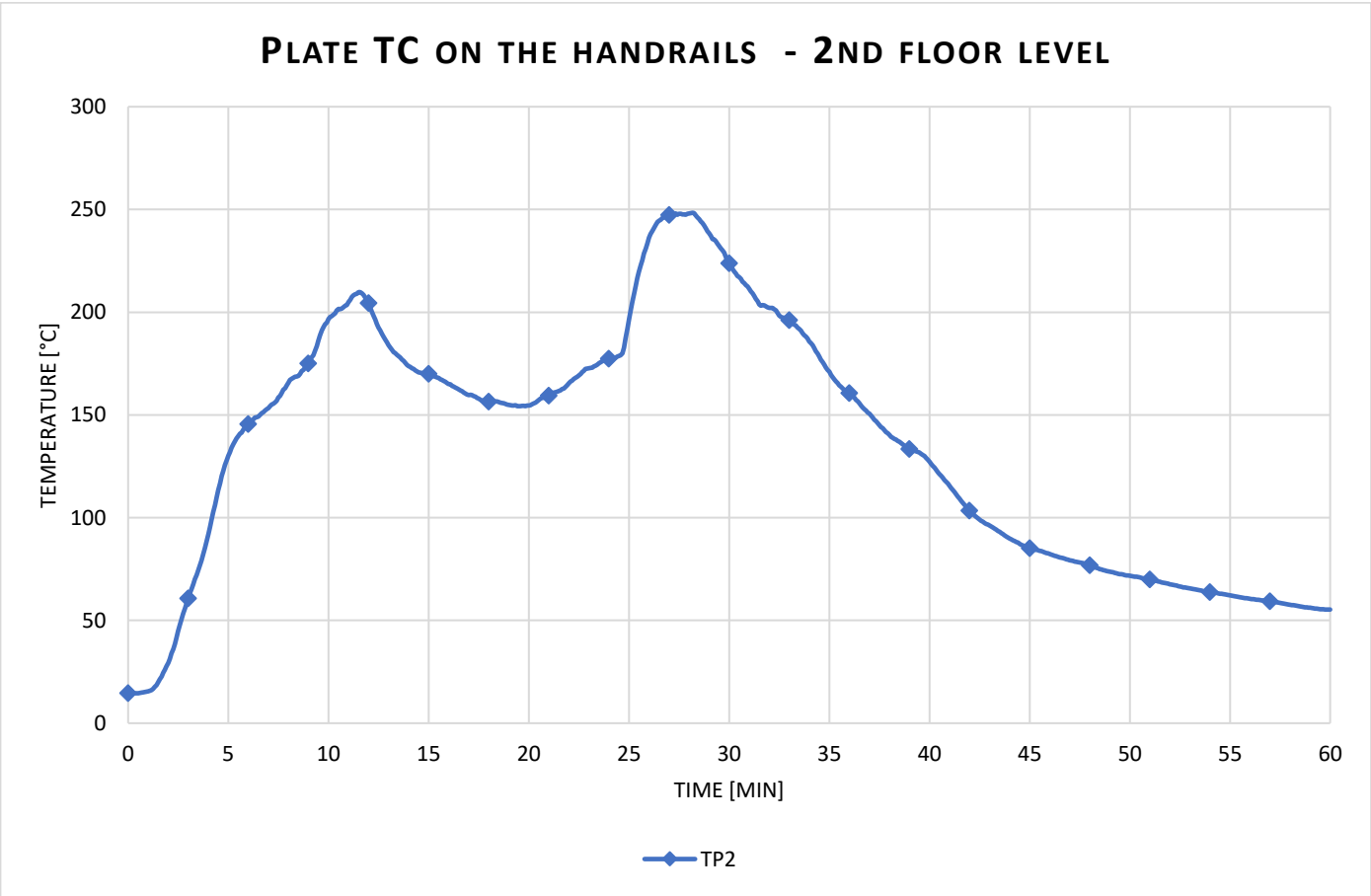

Temperature measured from the Inconel on 2nd floor handrails

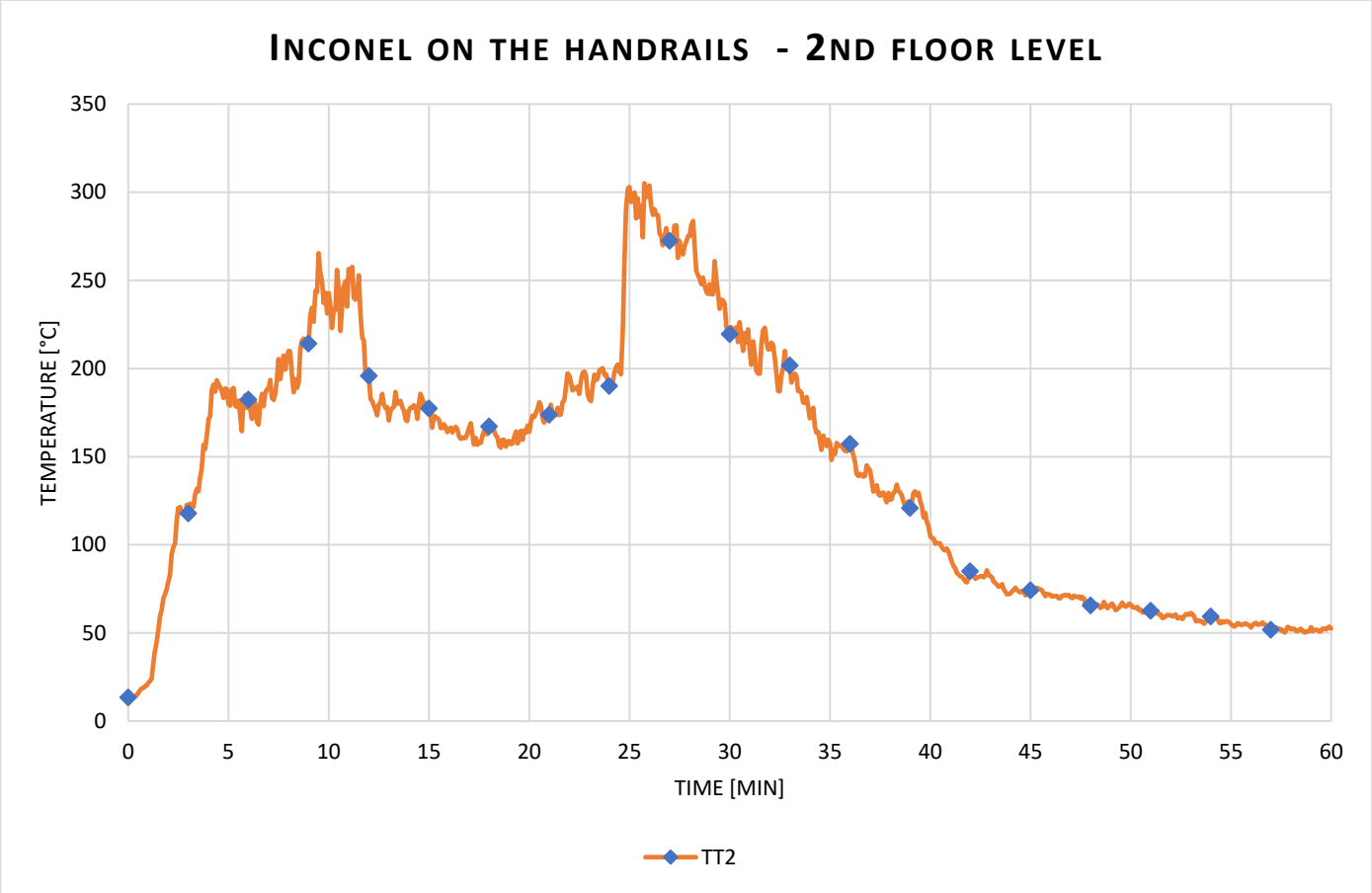

Radiant heat calculated from Plate TC

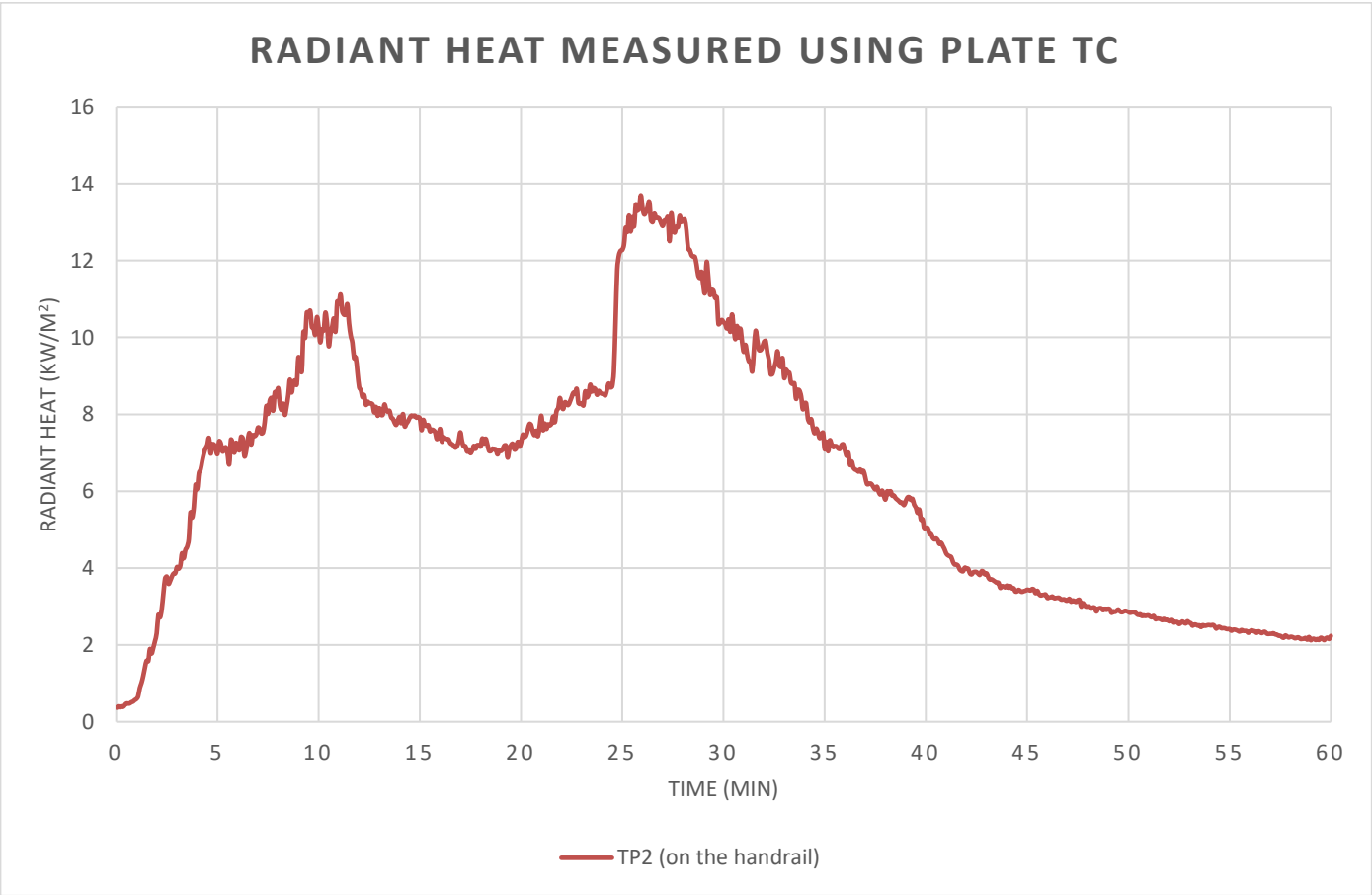

Data measurement from Ground floor sidewalls

Layout

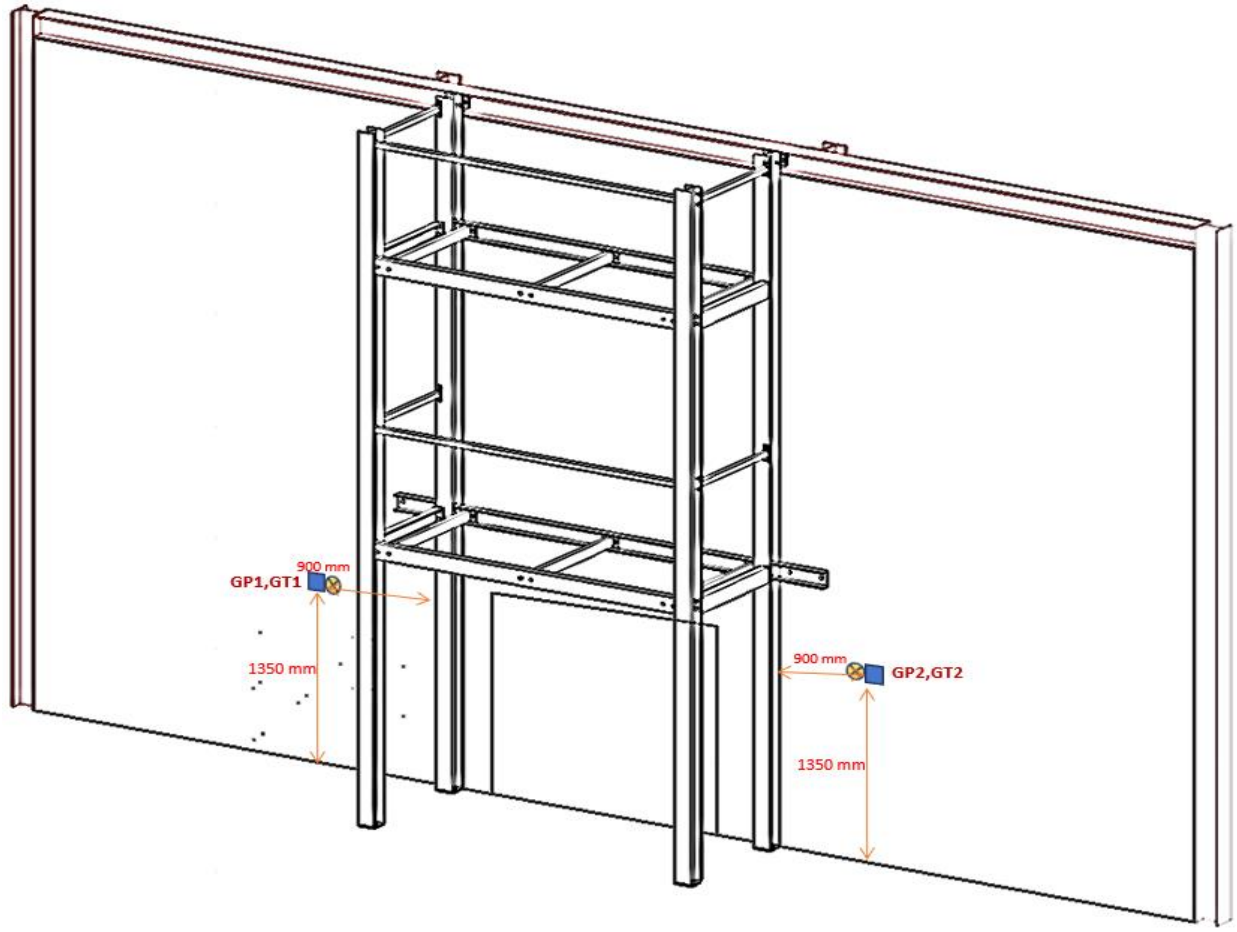

Temperature measured from the Plate TC's from Ground floor sidewalls

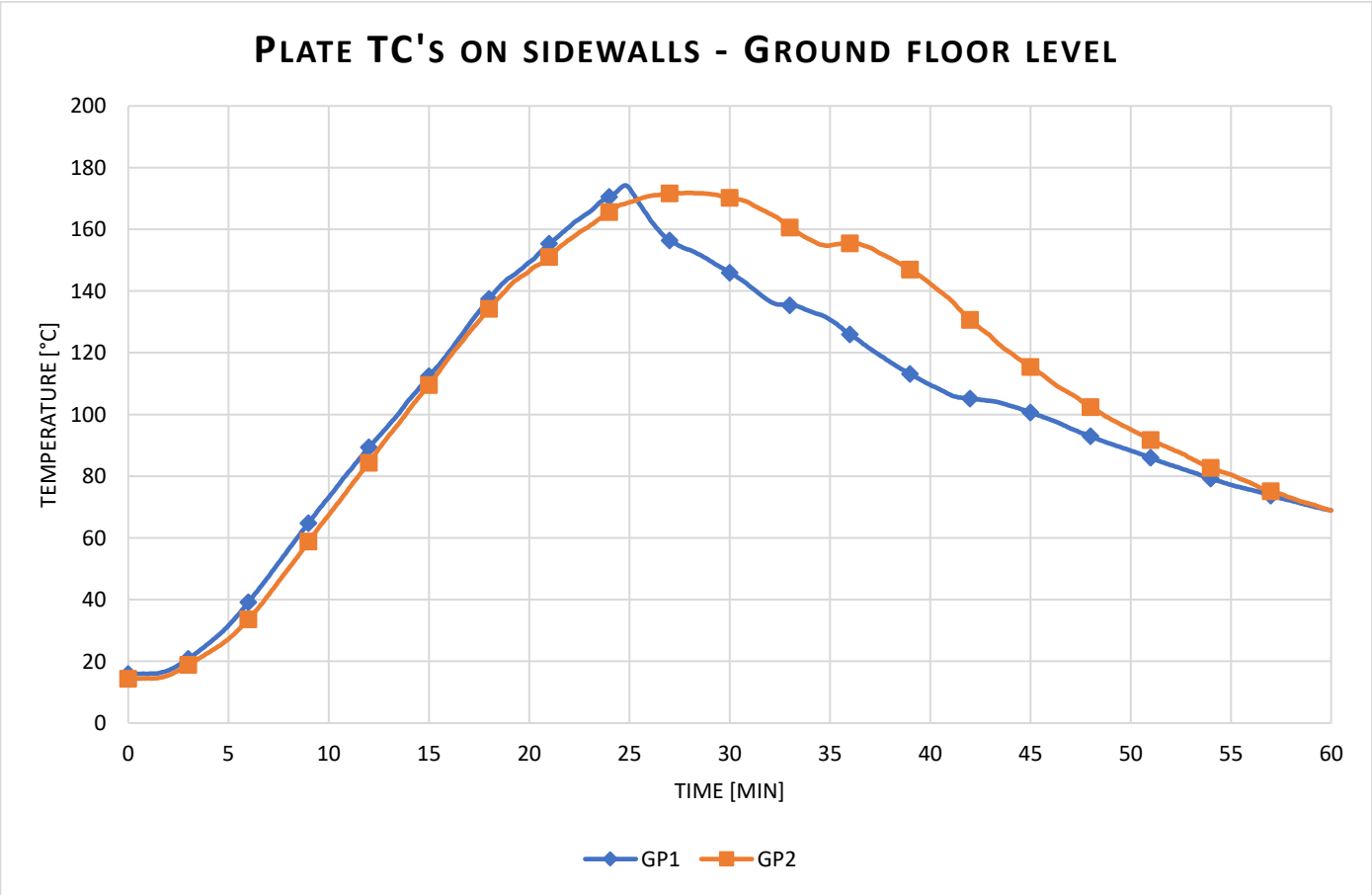

Temperature measured from the Inconel from 1st floor sidewall

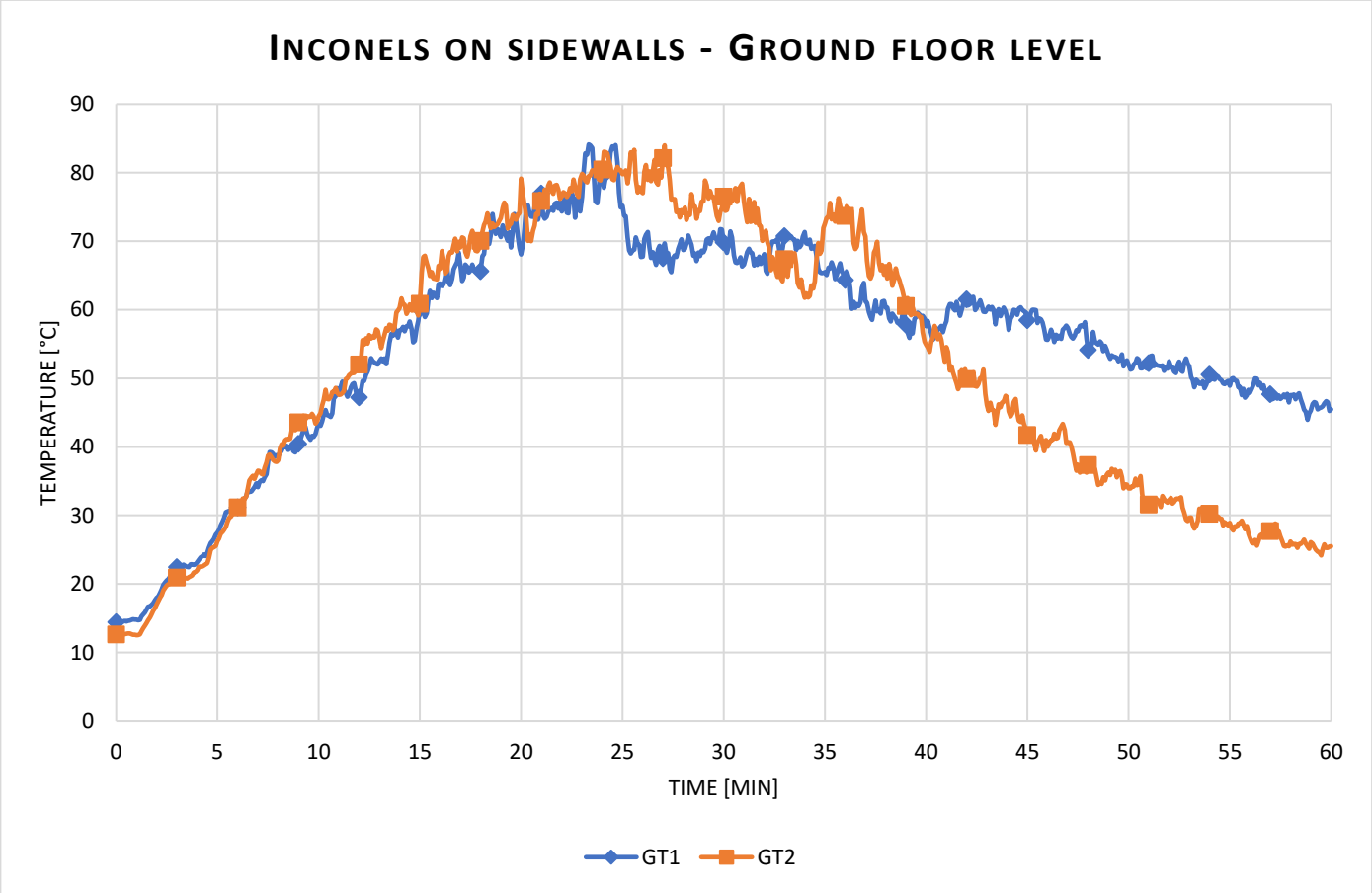

Radiant heat calculated from Plate TC's

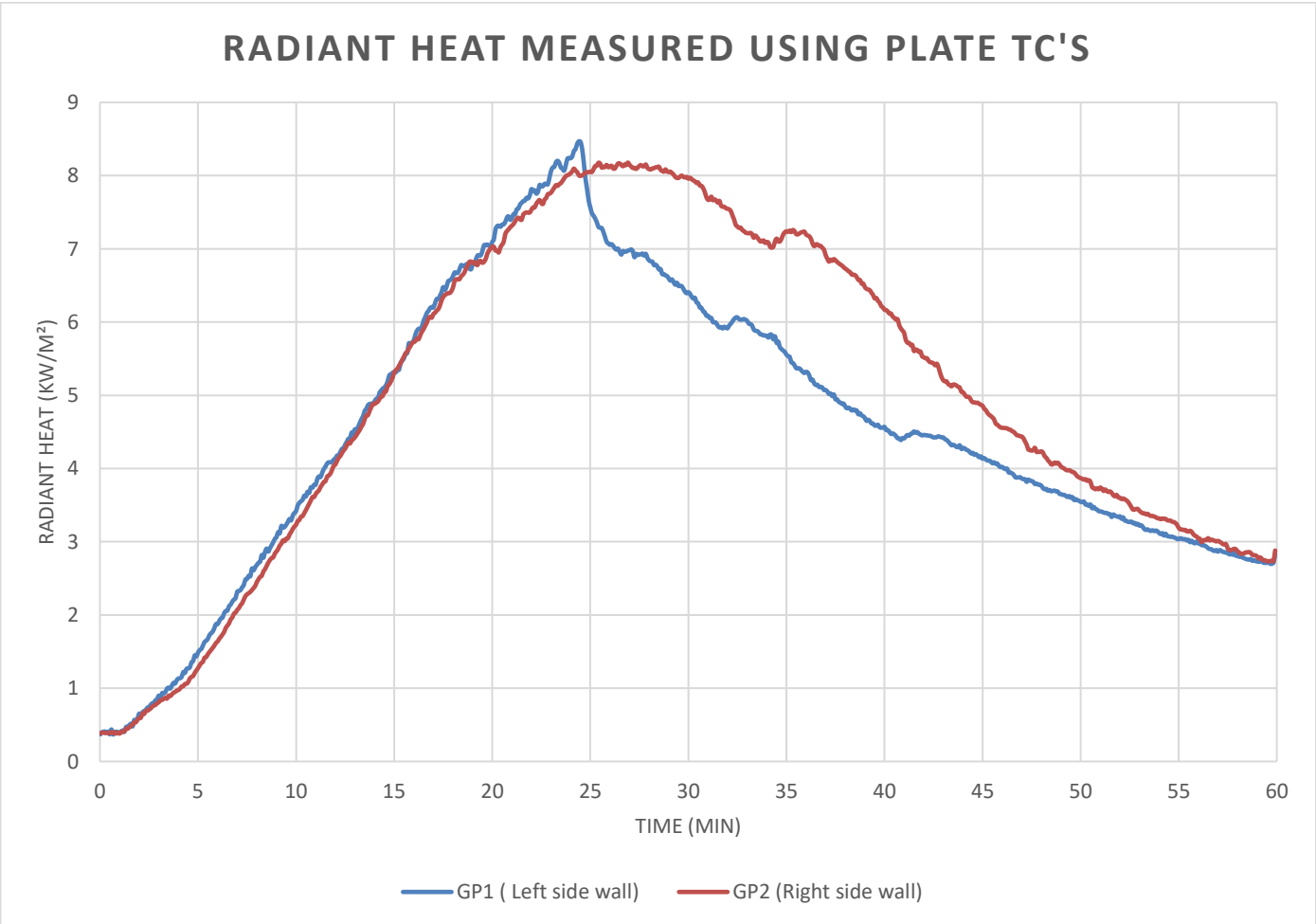

Data measurement from 1st floor sidewall

Layout

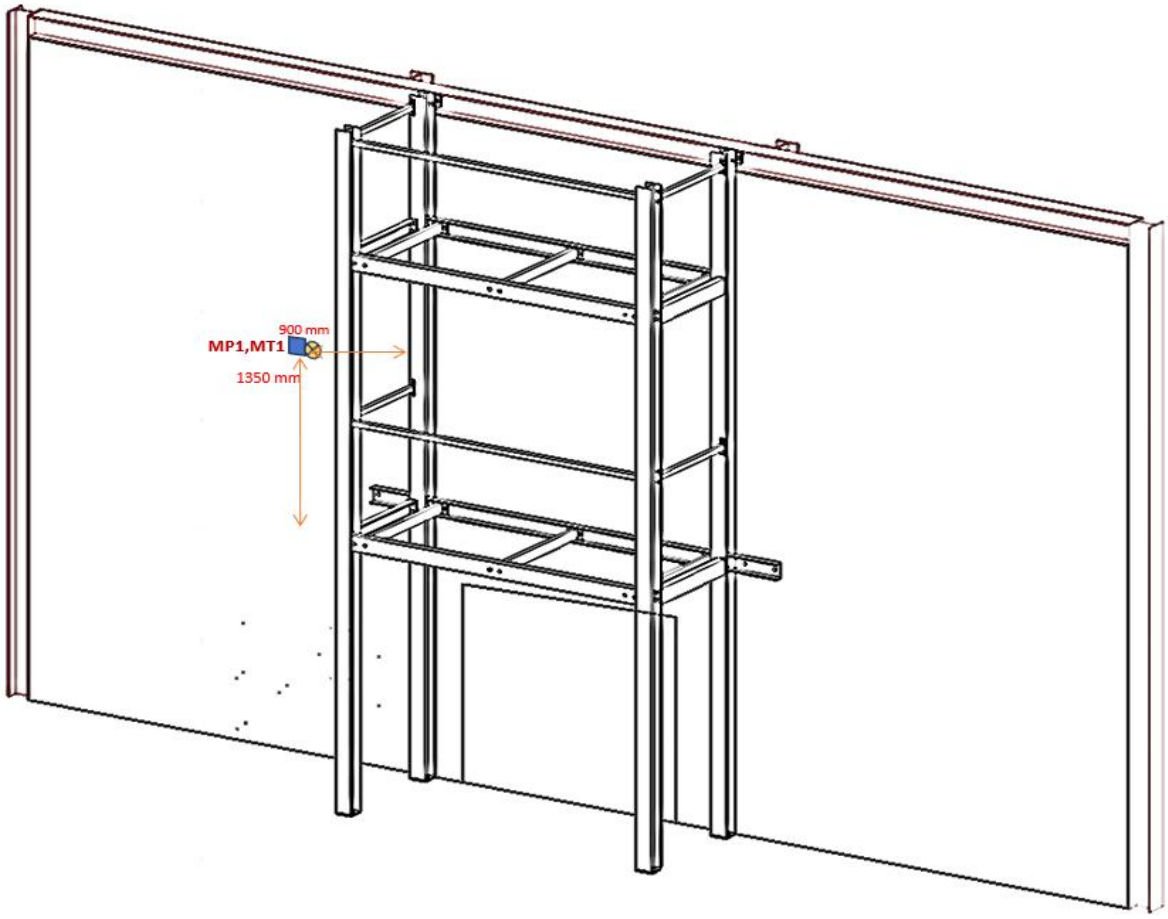

Temperature measured from the Plate TC from 1st floor sidewall

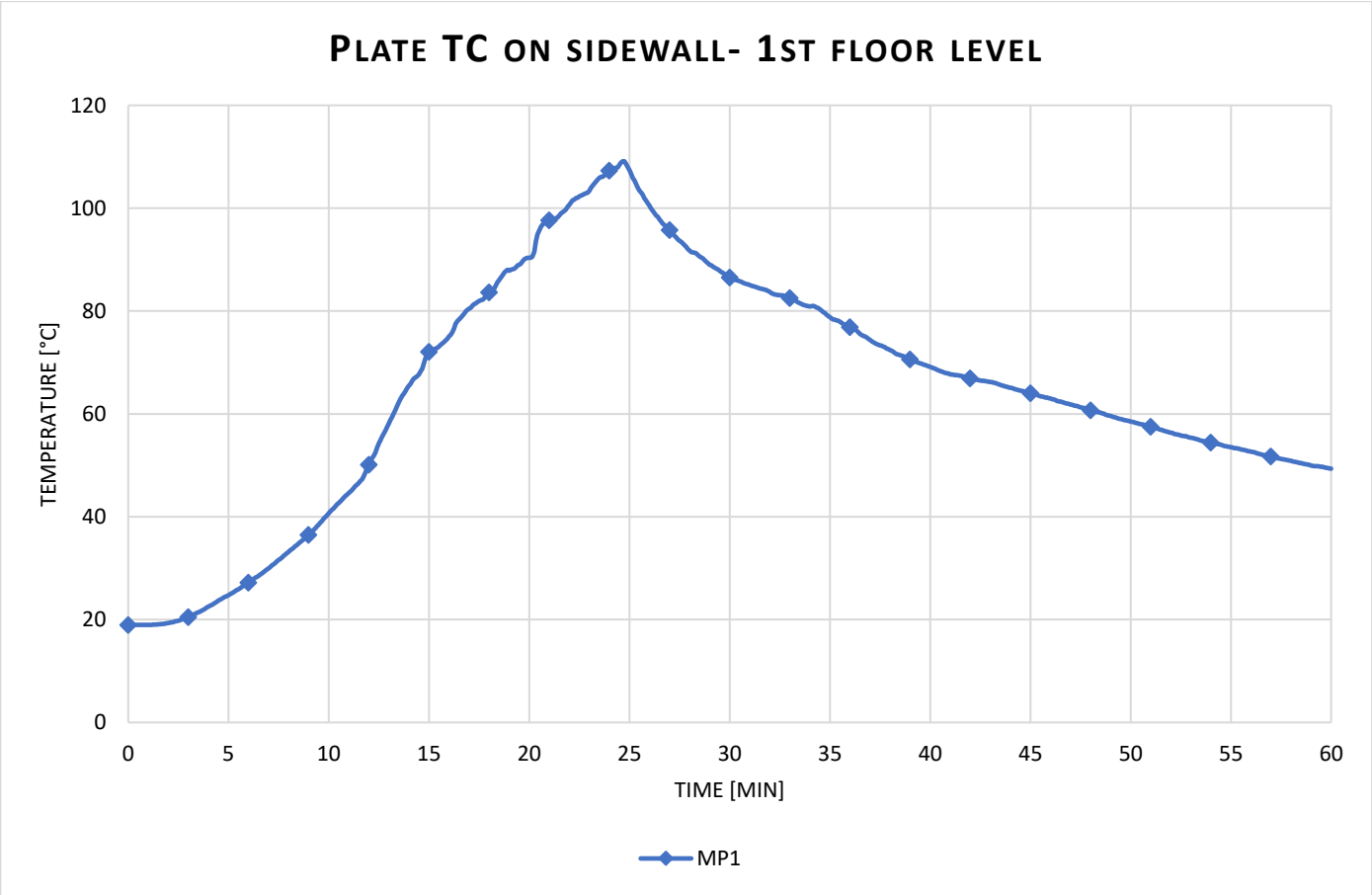

Temperature measured from the Inconel from 1st floor sidewall

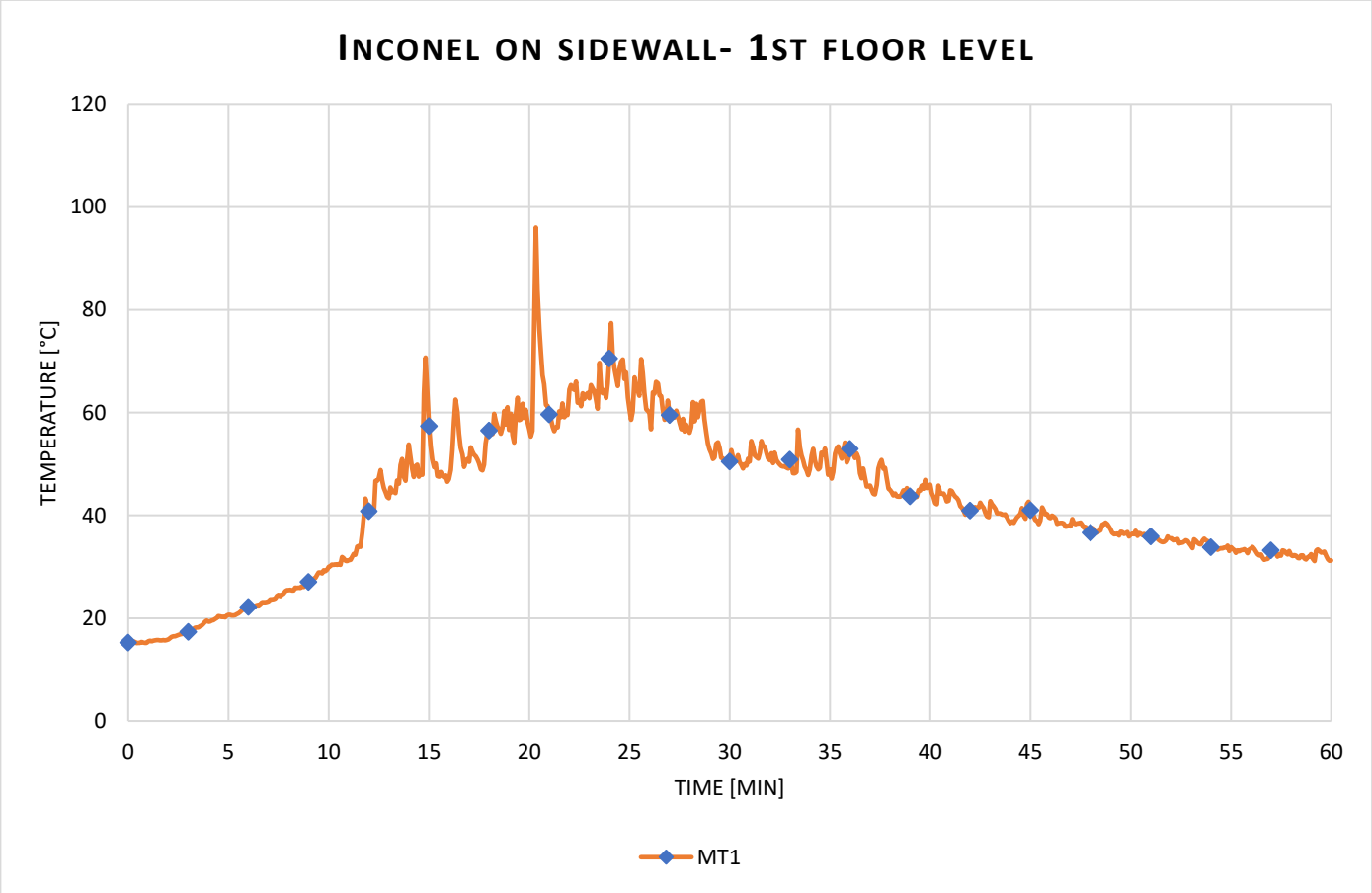

Radiant heat calculated from Plate TC

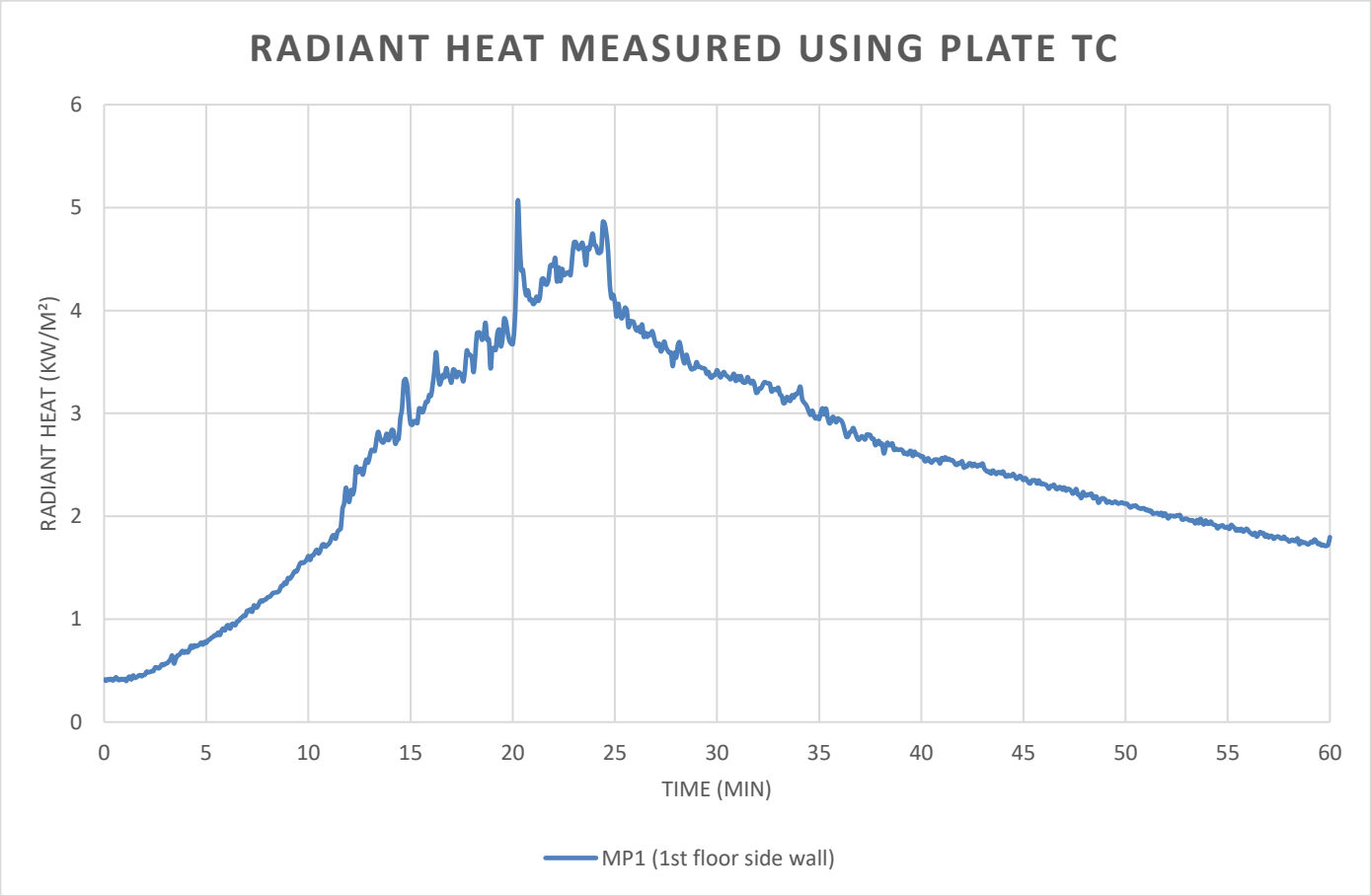

Data measurement from 2nd floor sidewall

Layout

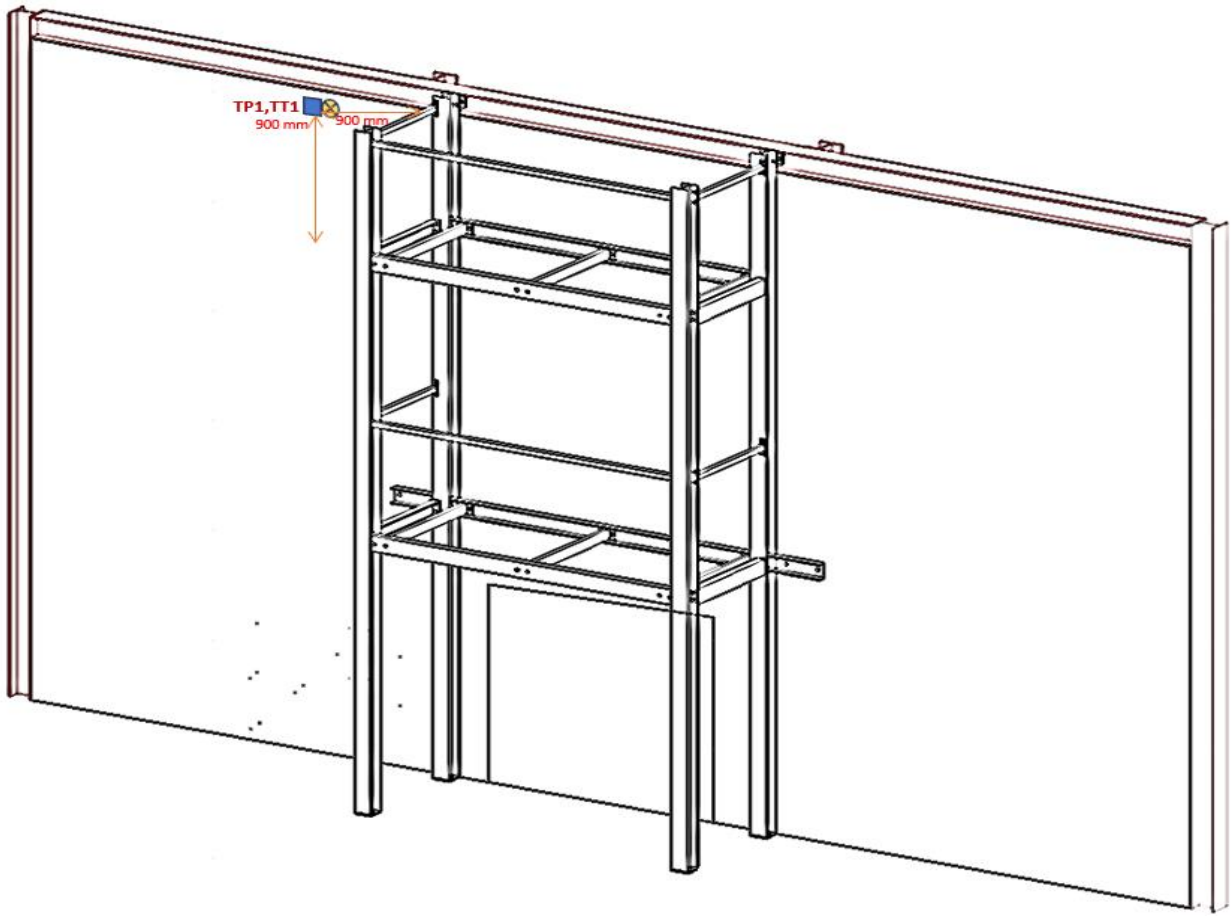

Temperature measured from the Plate TC from 2nd floor sidewall

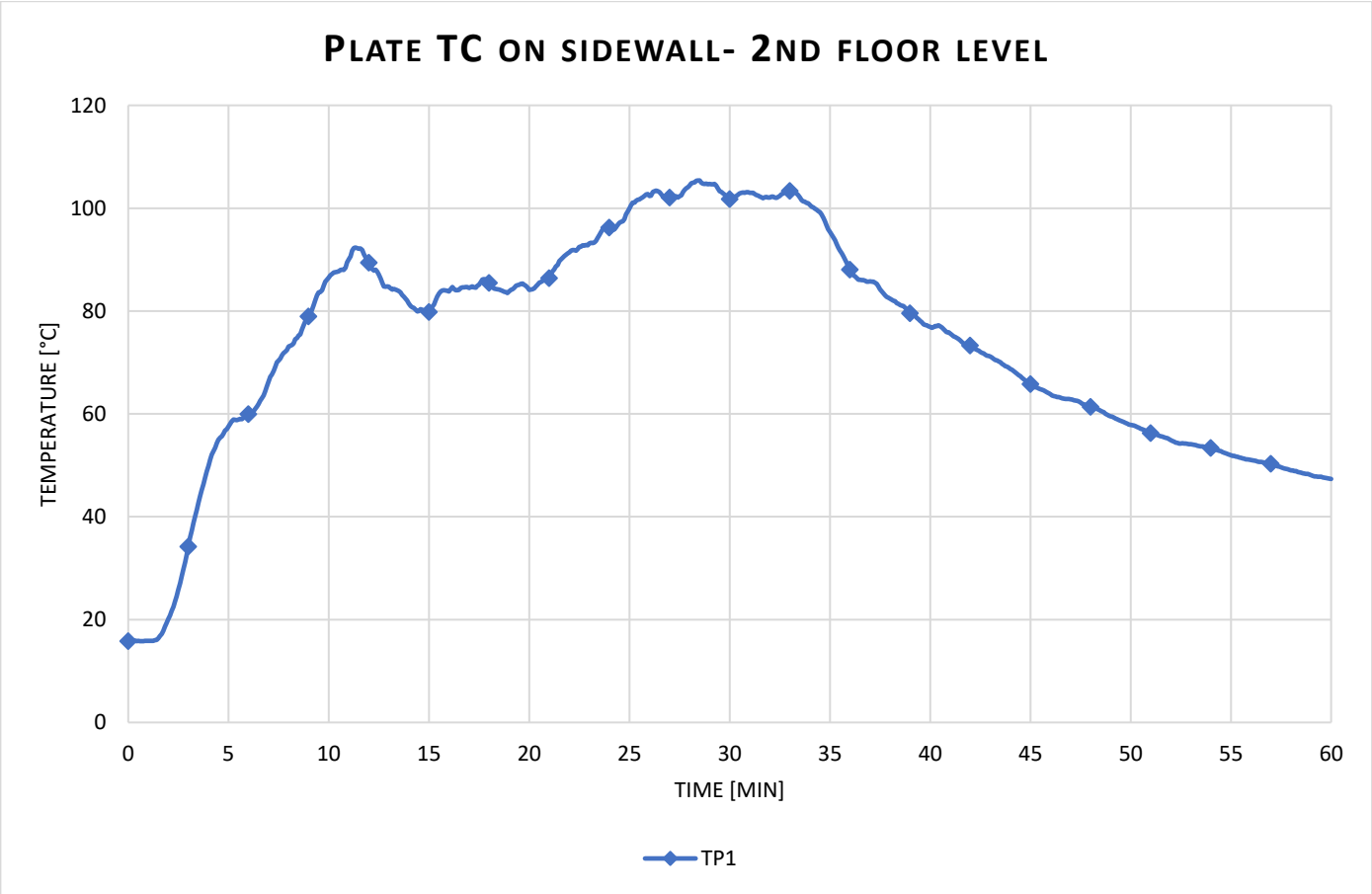

Temperature measured from the Inconel from 2nd floor sidewall

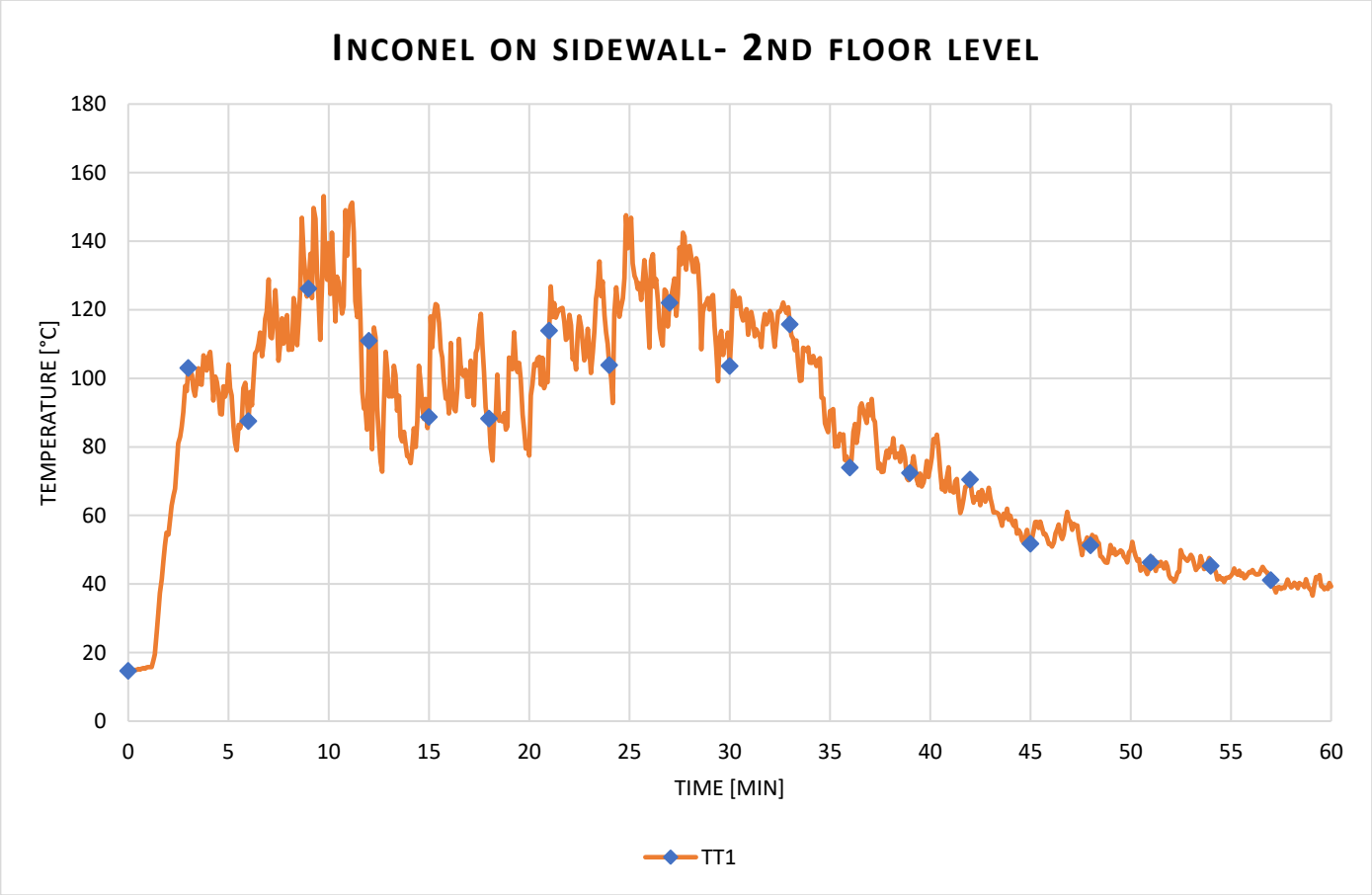

Radiant heat calculated from Plate TC

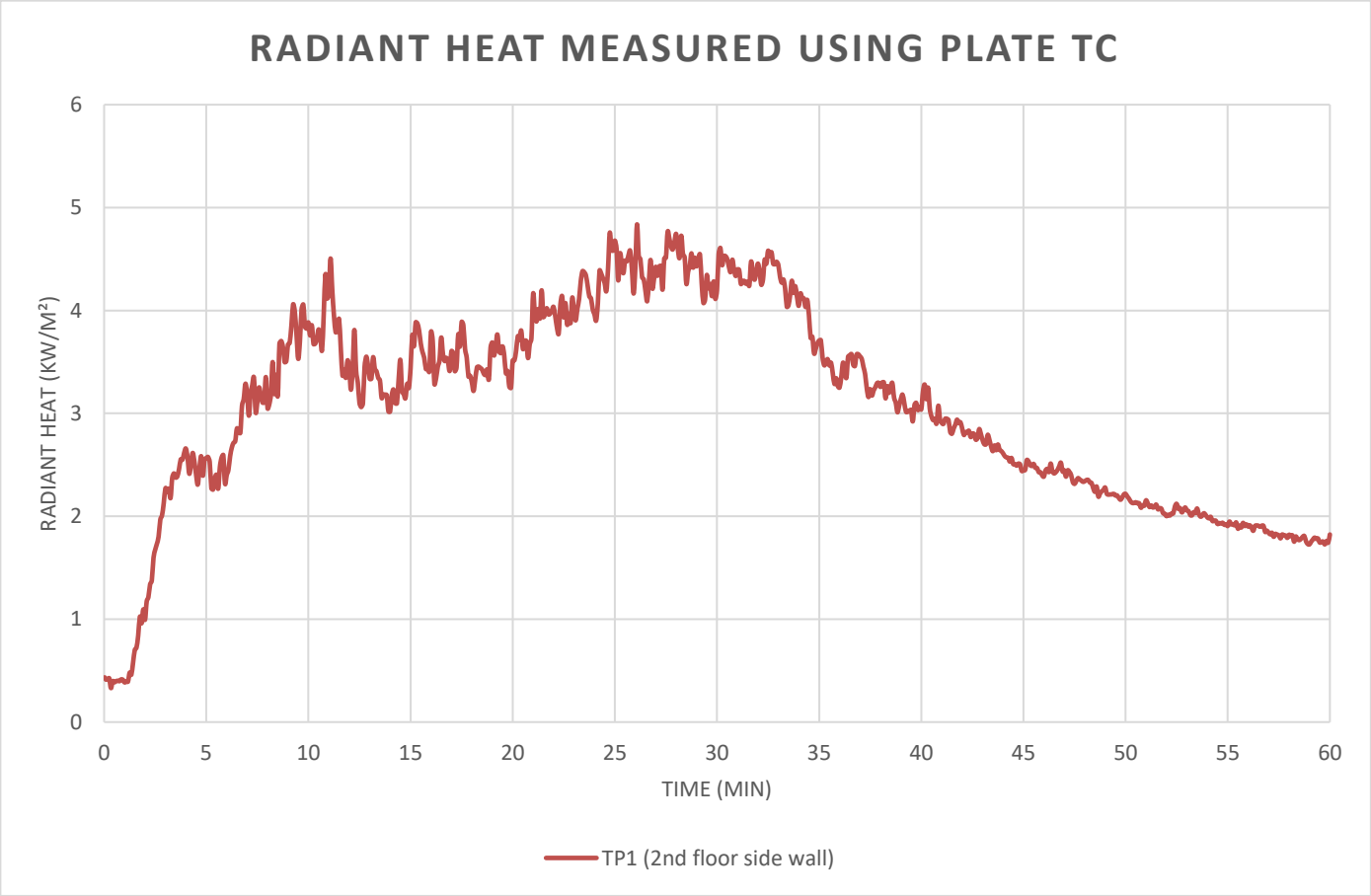

Data measurement from the steel C-section underneath 1st floor

Layout

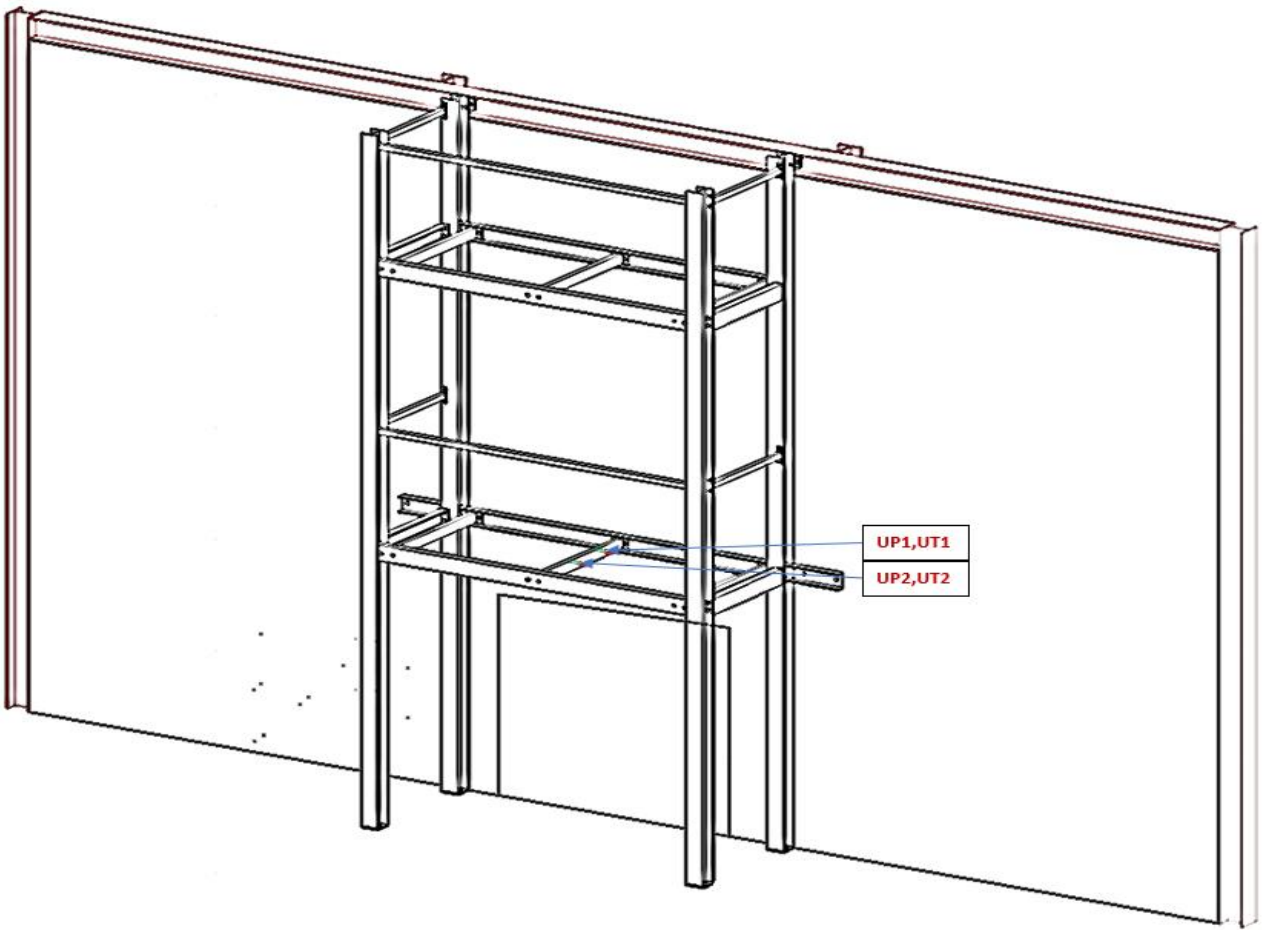

Temperature measured from the Plate TC's on the steel C-section underneath 1st floor

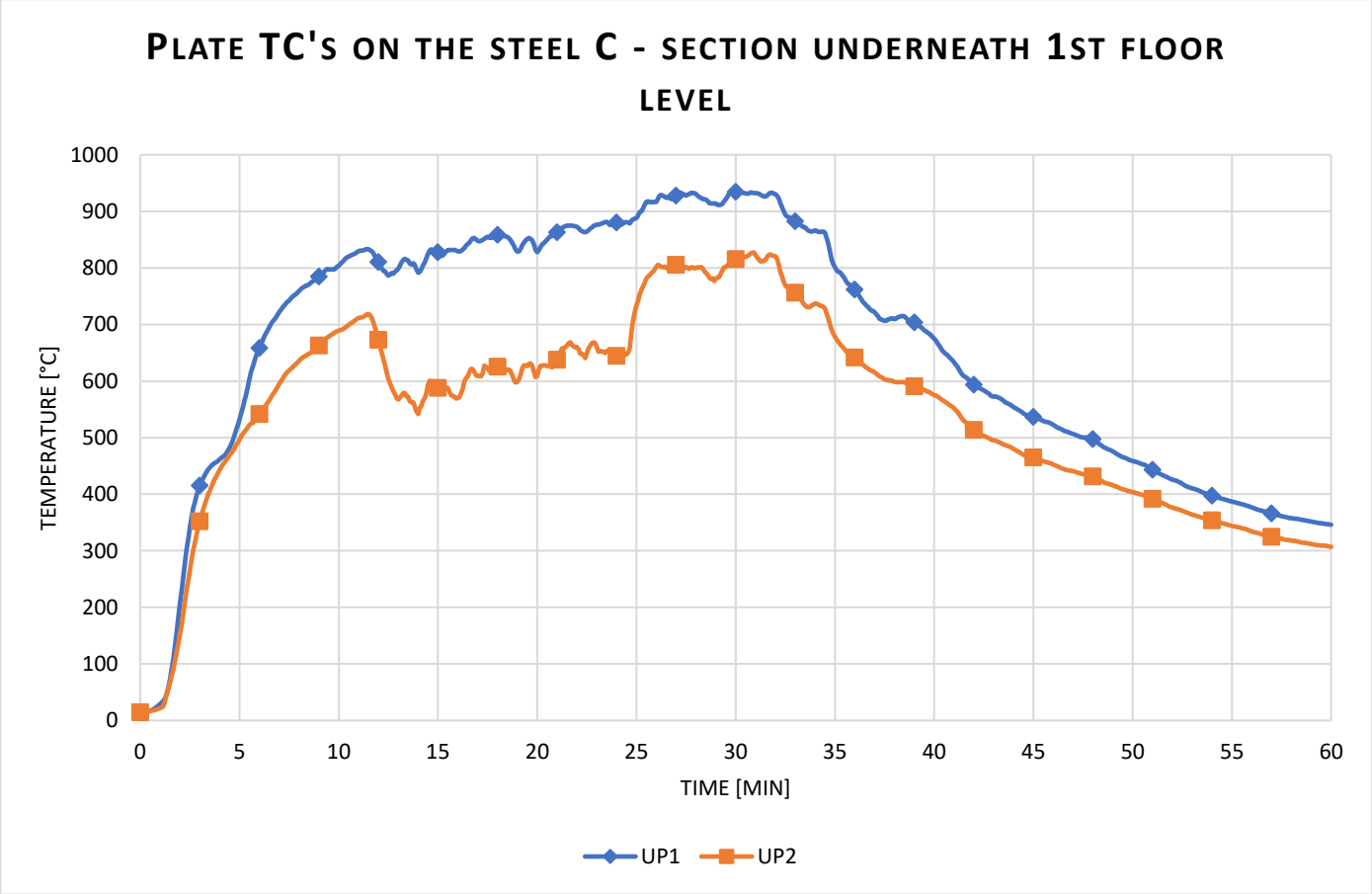

Temperature measured from the Inconels on the steel C-section underneath 1st floor

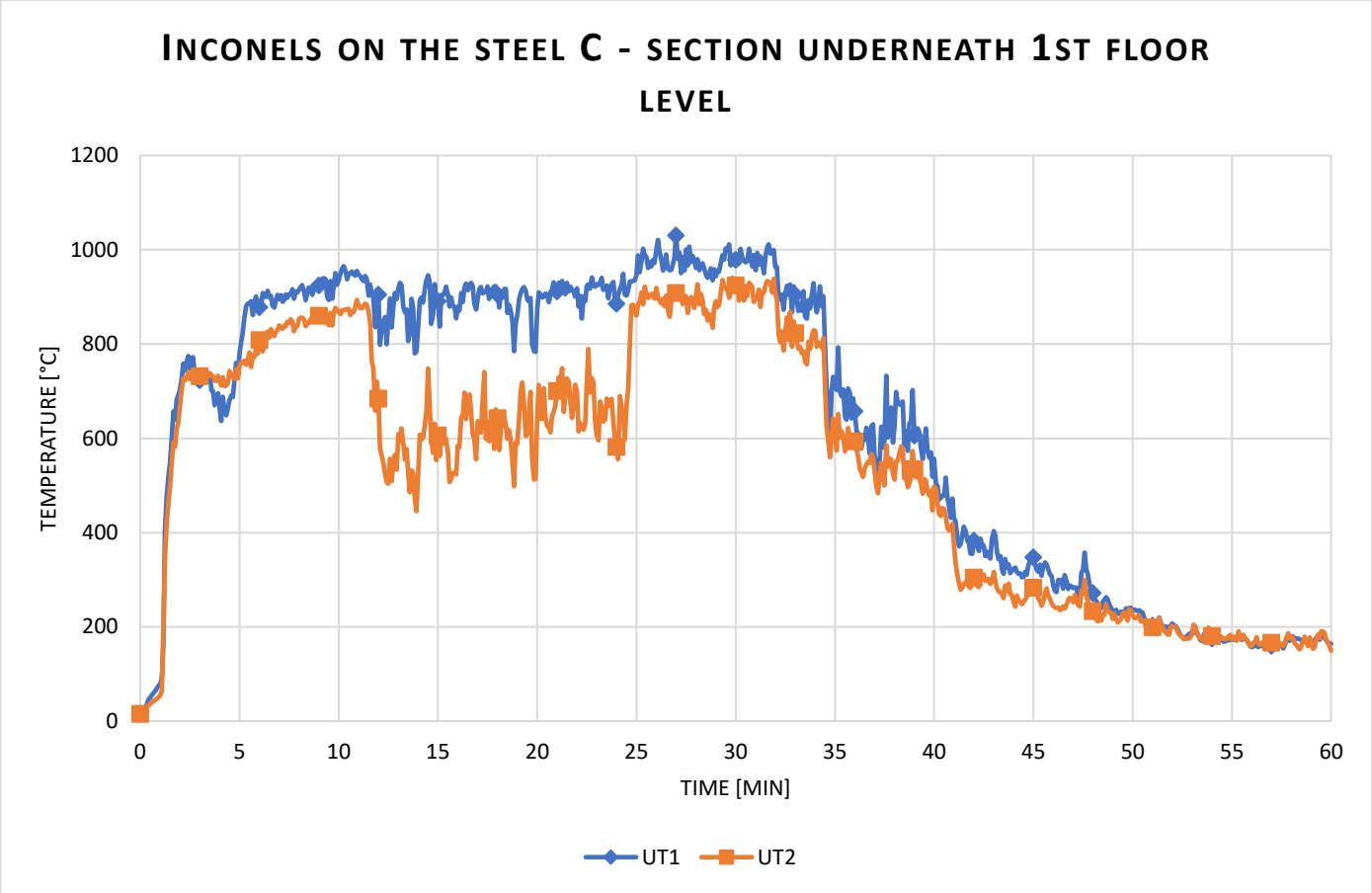

Radiant heat calculated from Plate TC

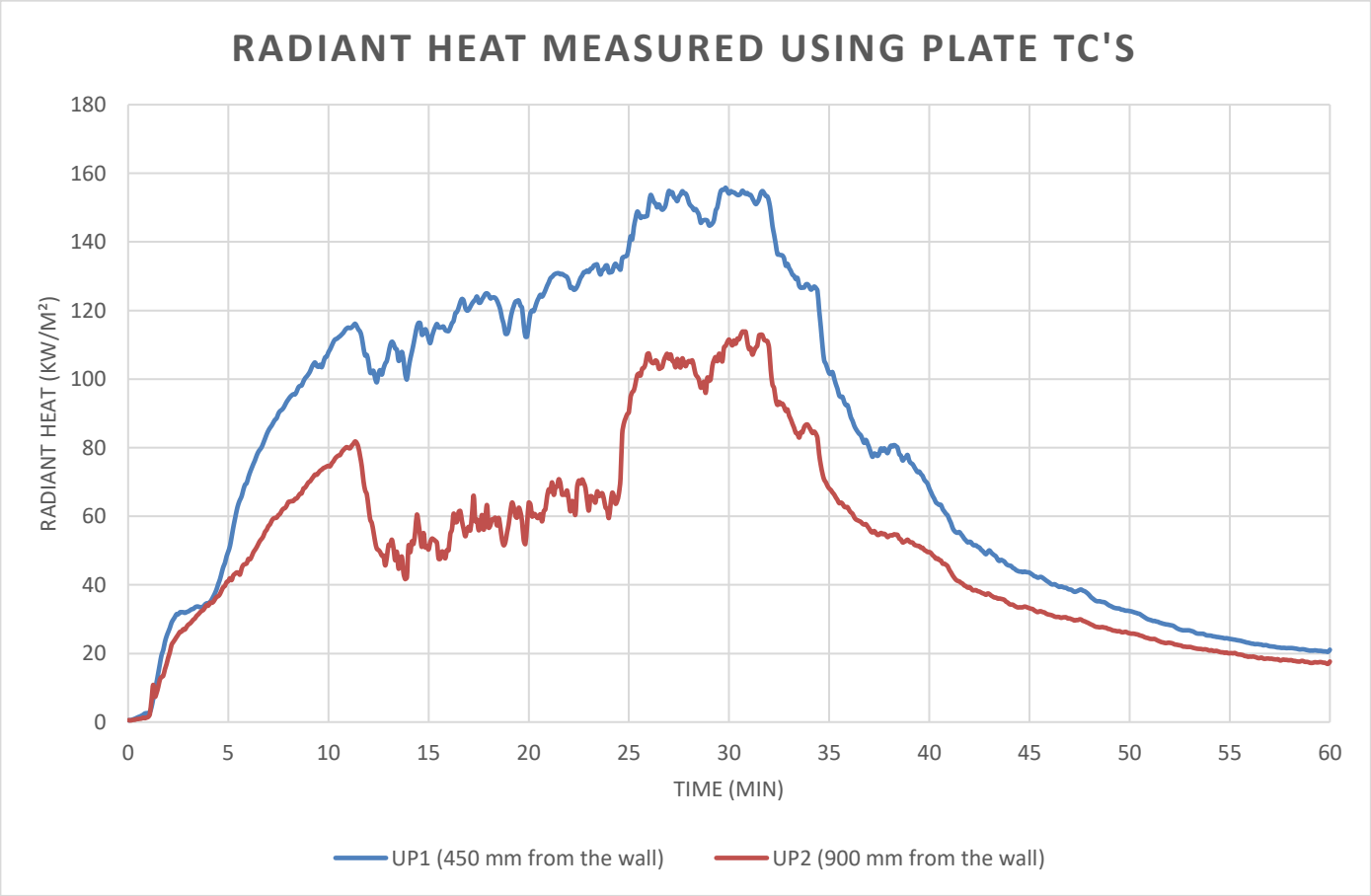

Data measurement from the steel C-section underneath 2nd floor

Layout

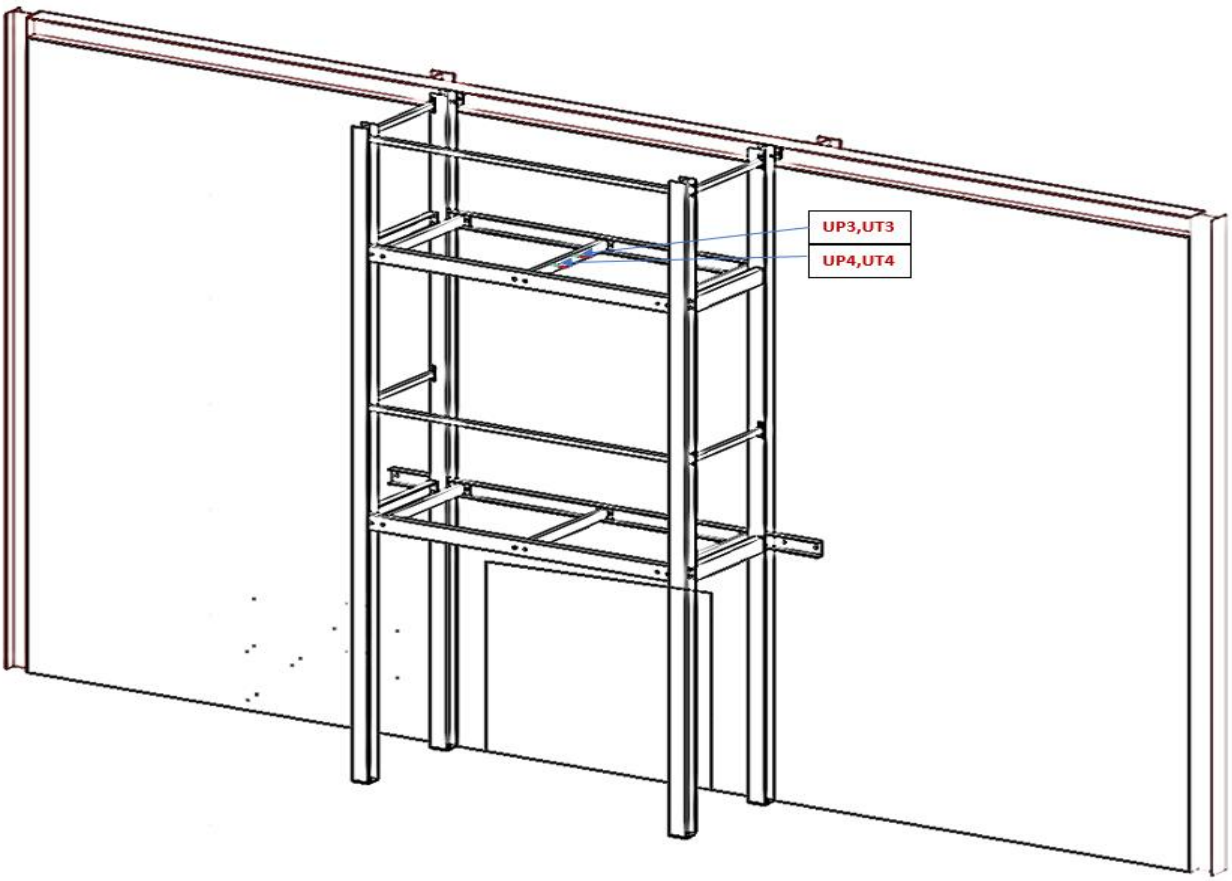

Temperature measured from the Plate TC's on the steel C-section underneath 2nd floor

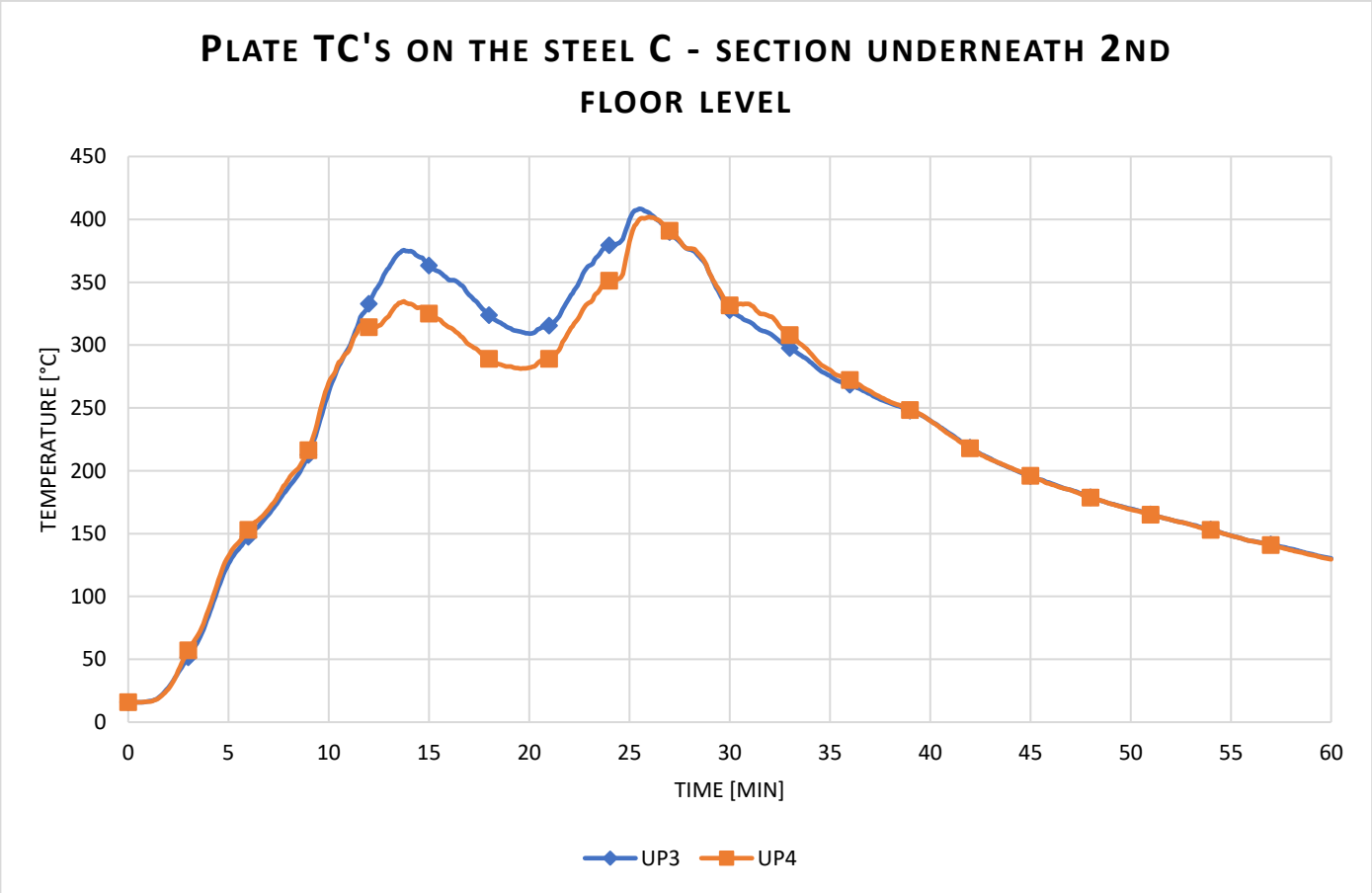

Temperature measured from the Inconels on the steel C-section underneath 2nd floor

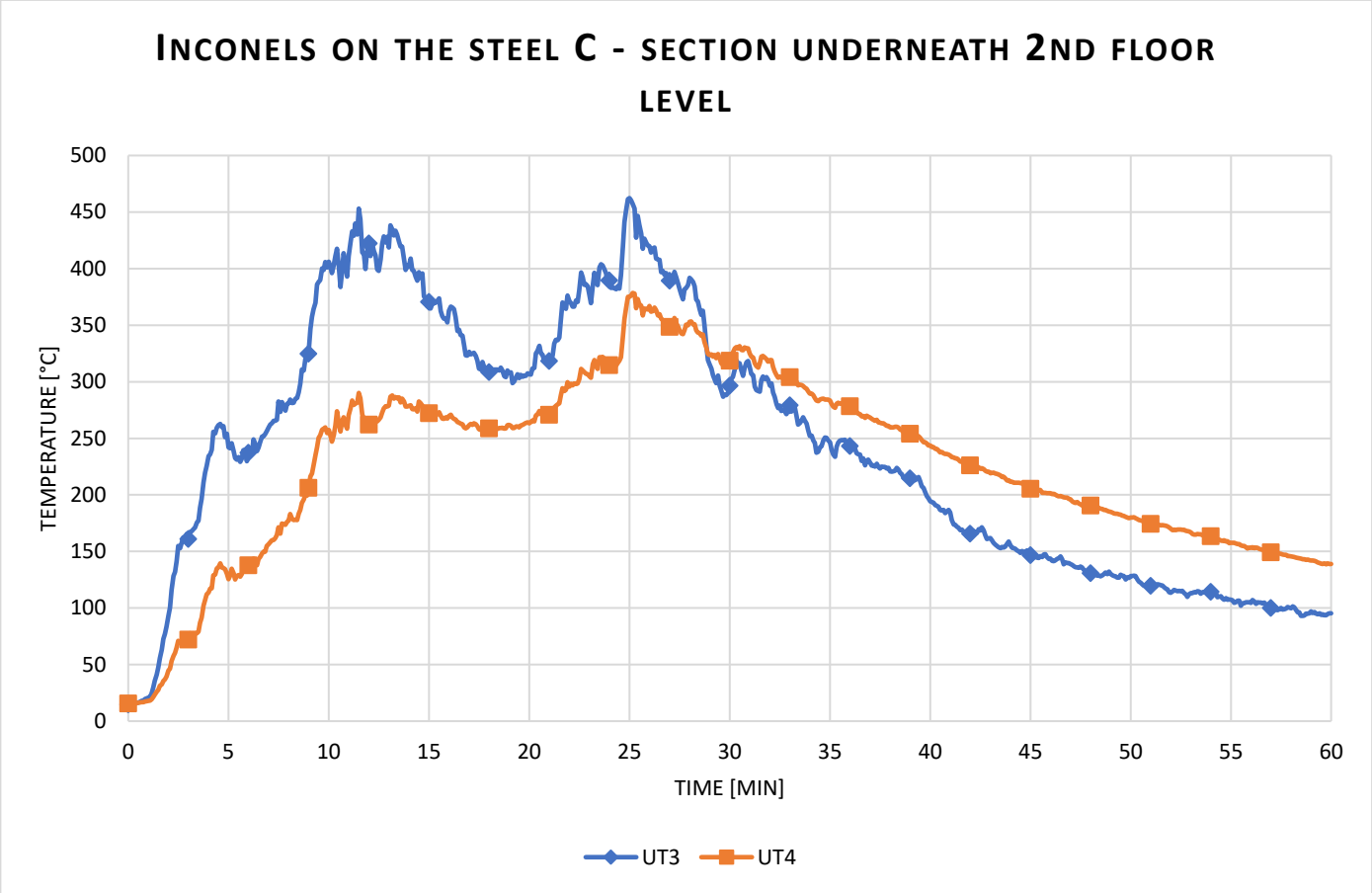

Radiant heat calculated from Plate TC's

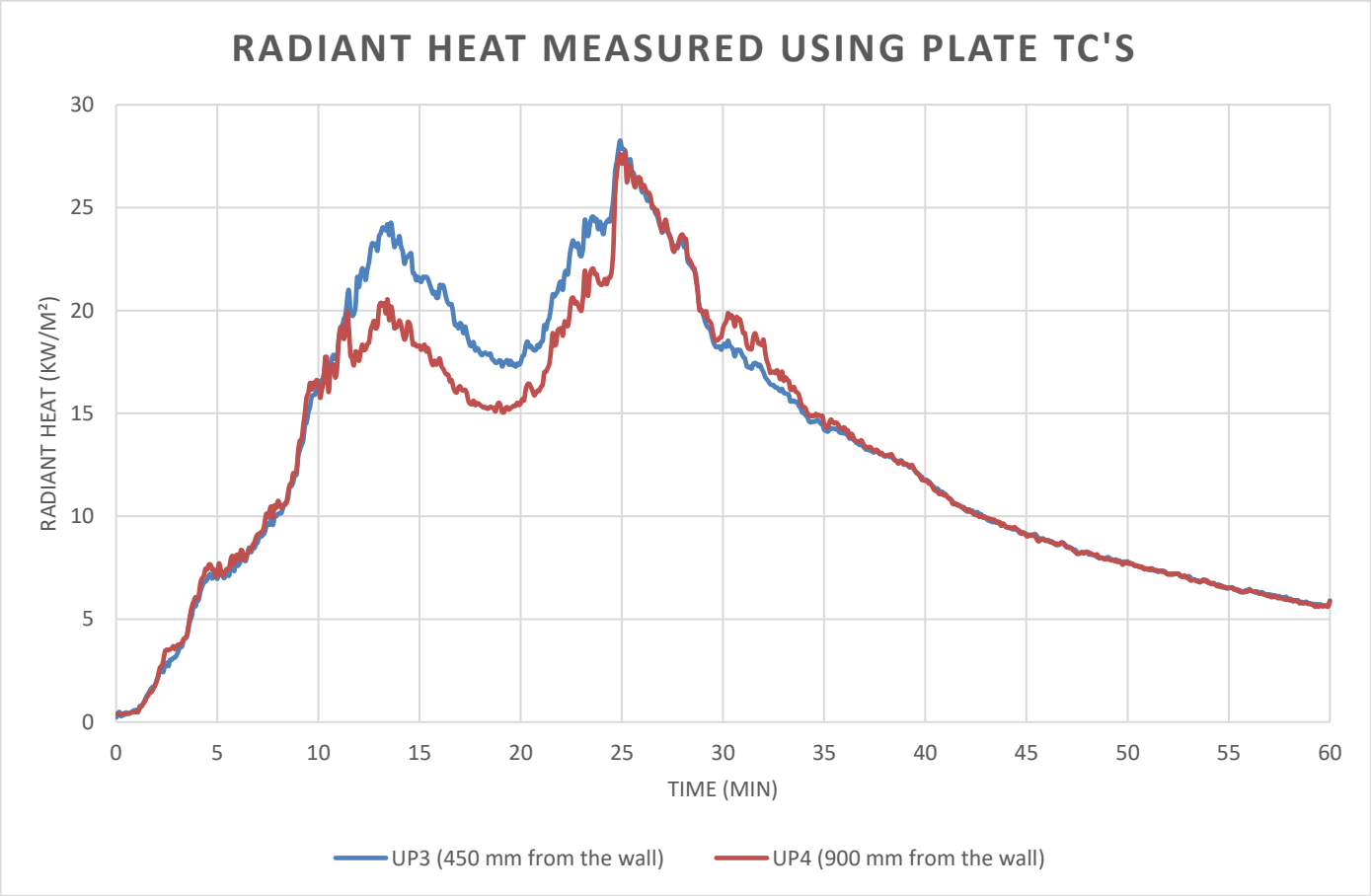

Data measurements from Inconels on side wall

Layout

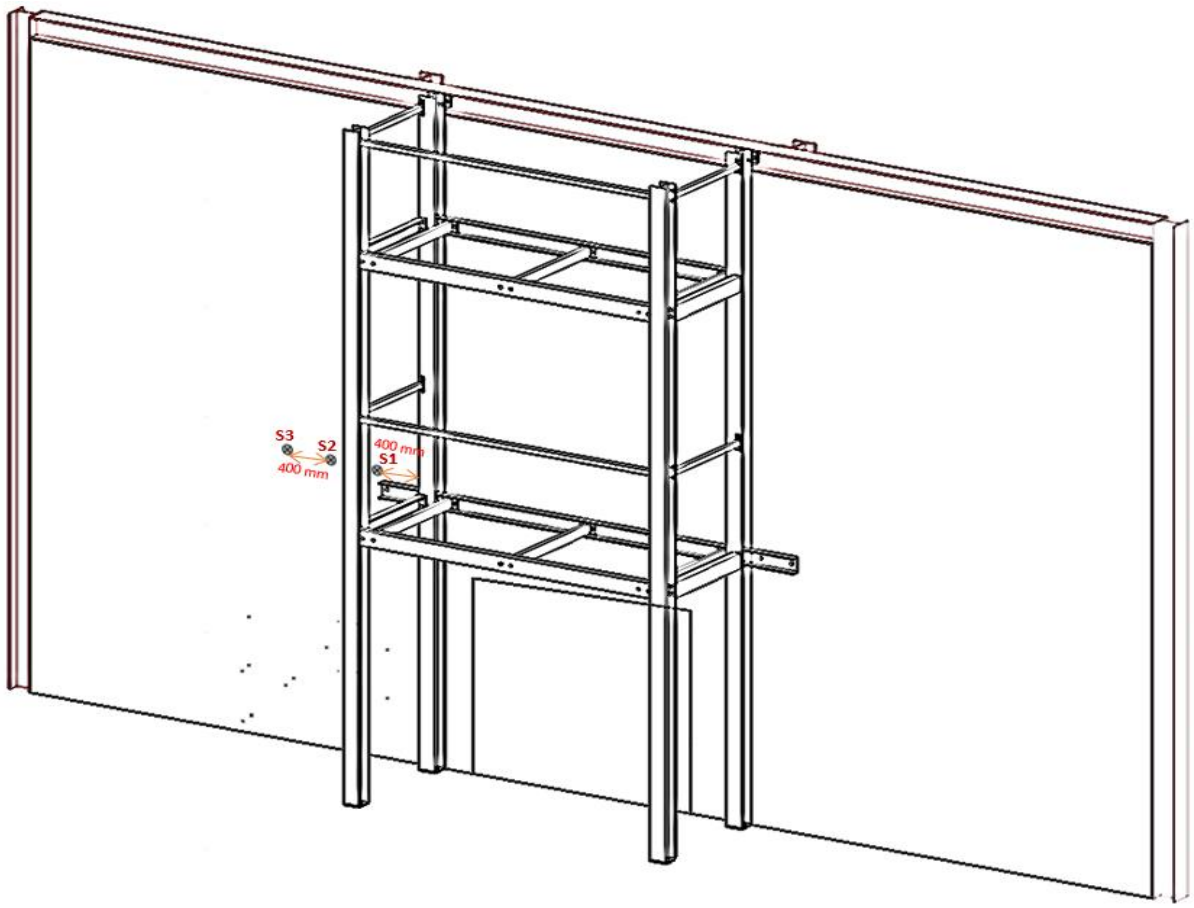

Temperature measured from the Inconels from the side wall – adjacent 1st floor level steel frame

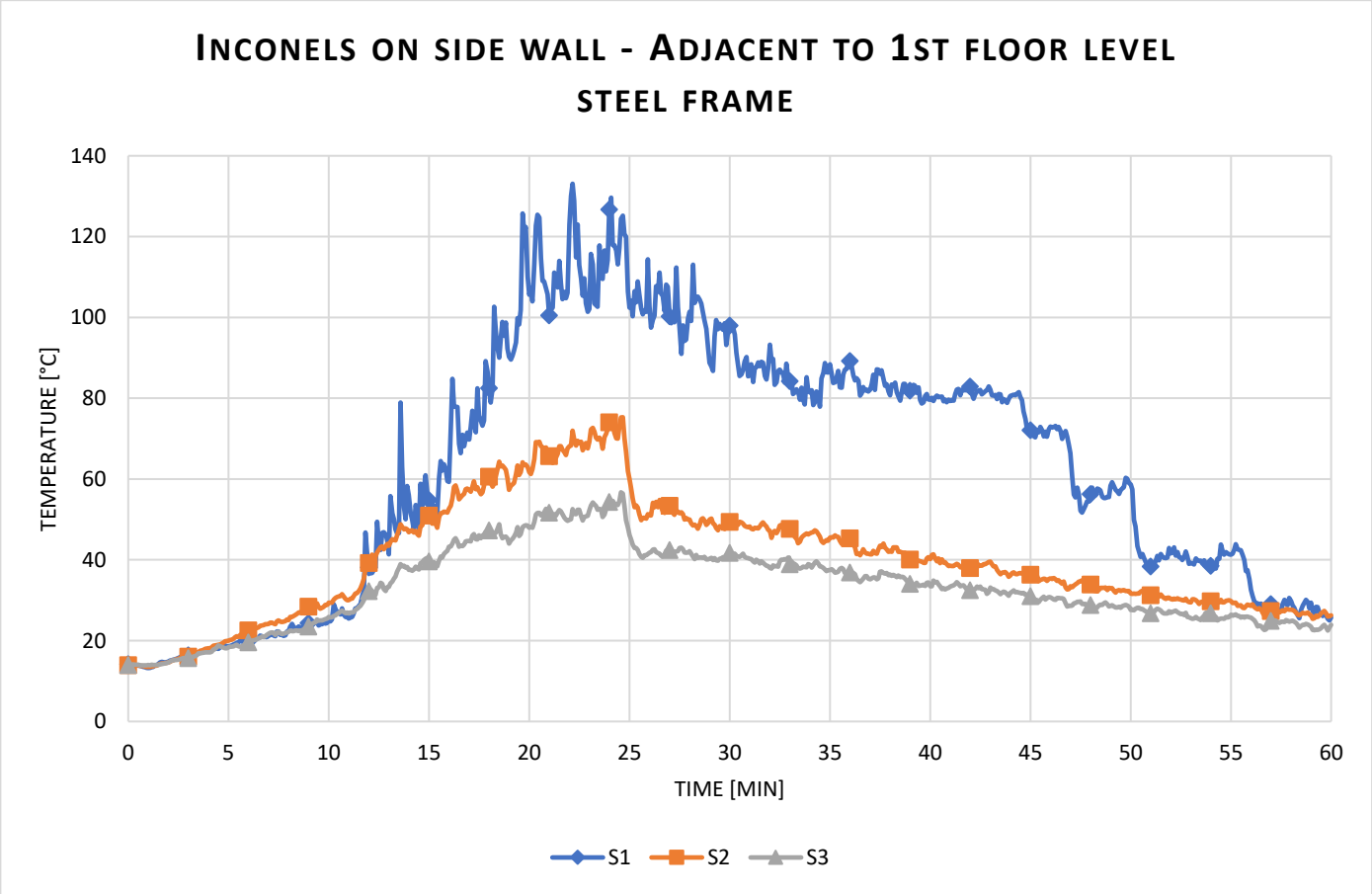

Data measurement from the Inconels on steel C - section

Layout

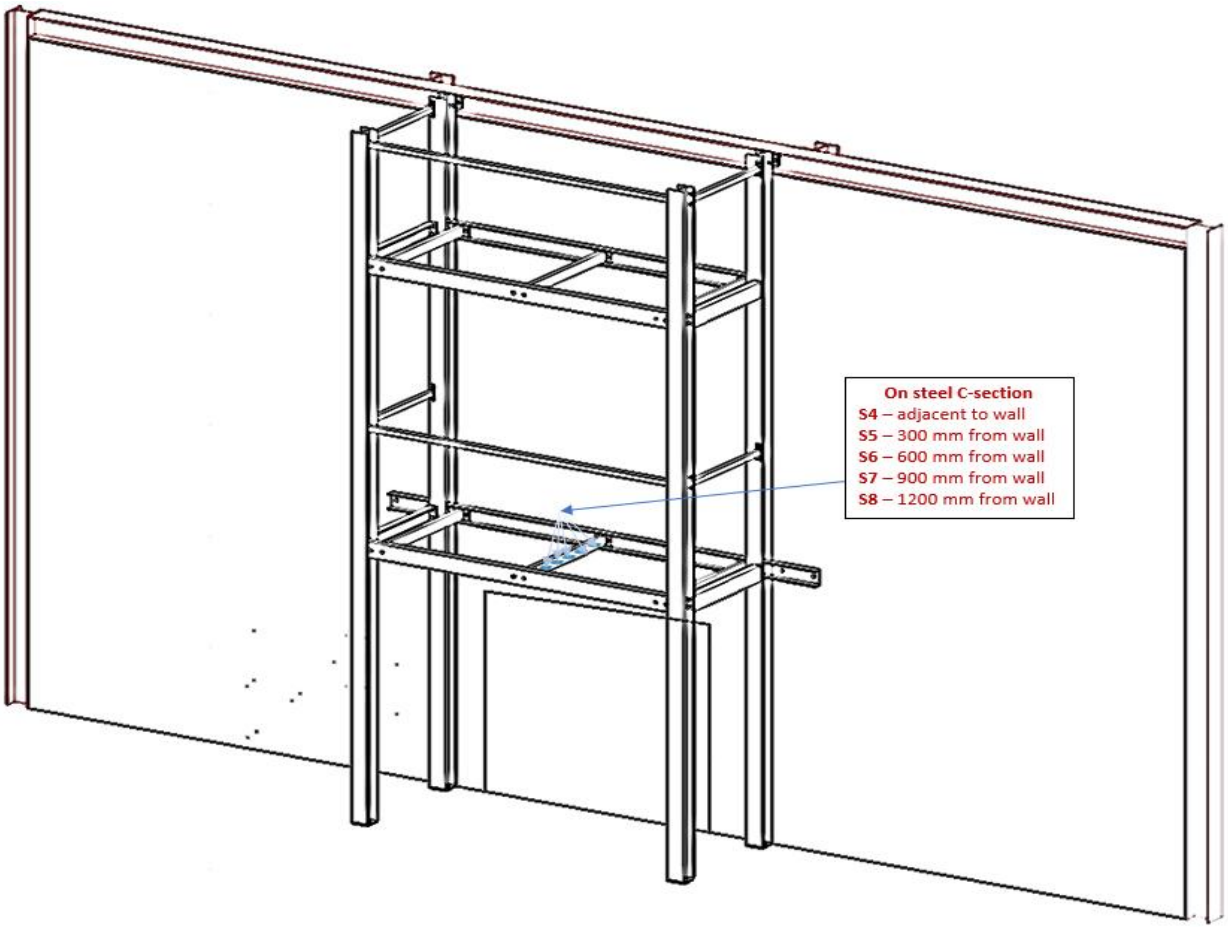

Temperature measured from the Inconels on steel C-section underneath 1st floor

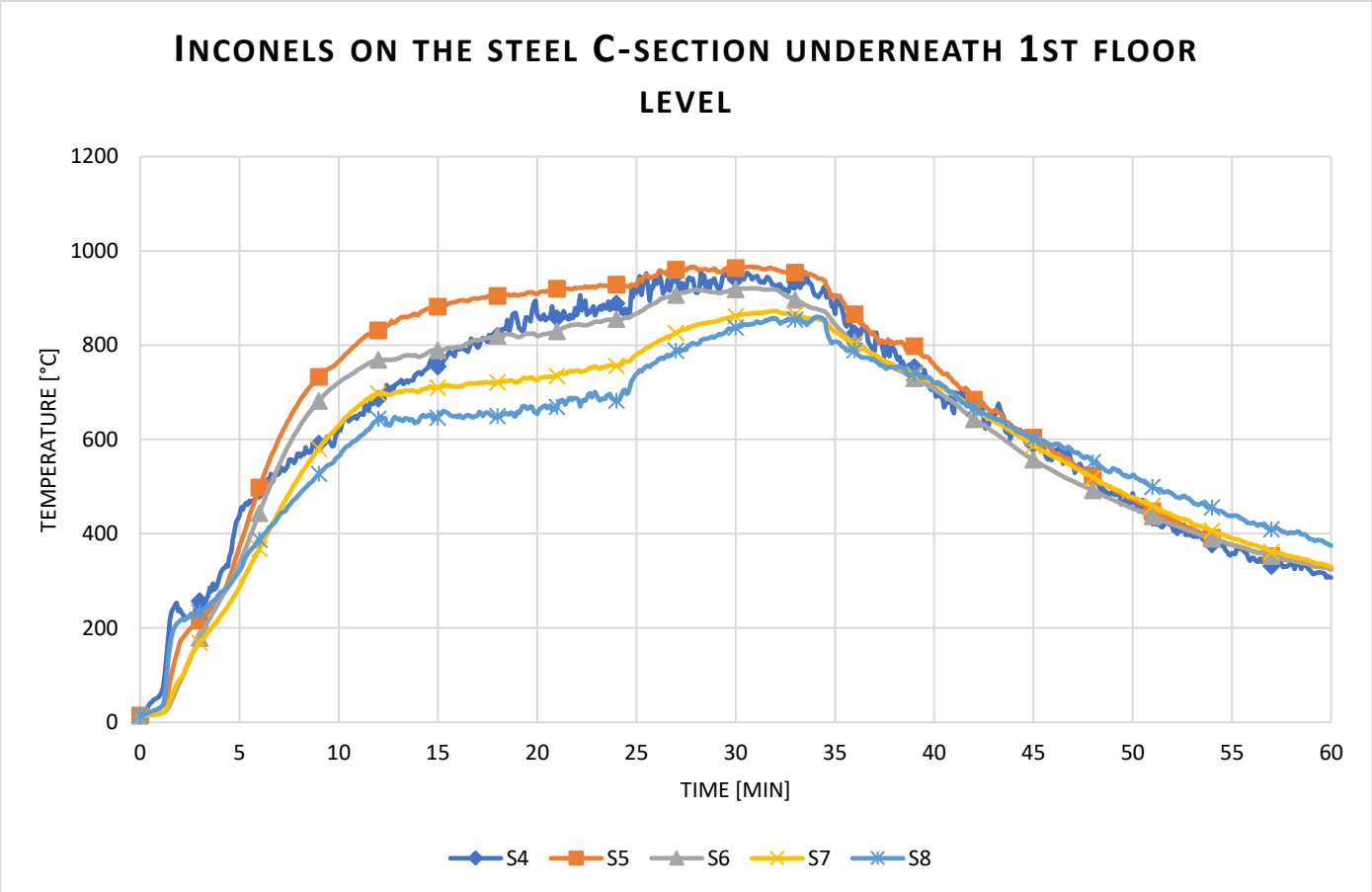

Data measurement from the Inconels facing crib (ground floor)

Layout

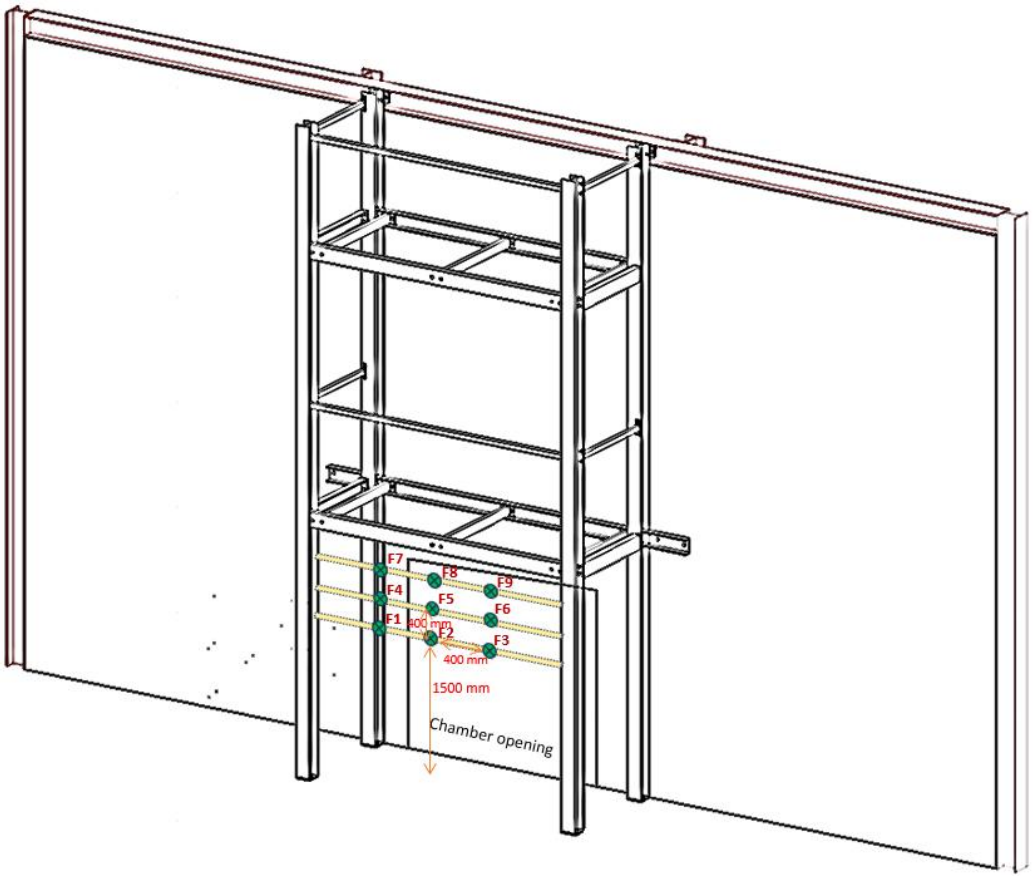

Temperature measured from the Inconels above the handrails facing the crib

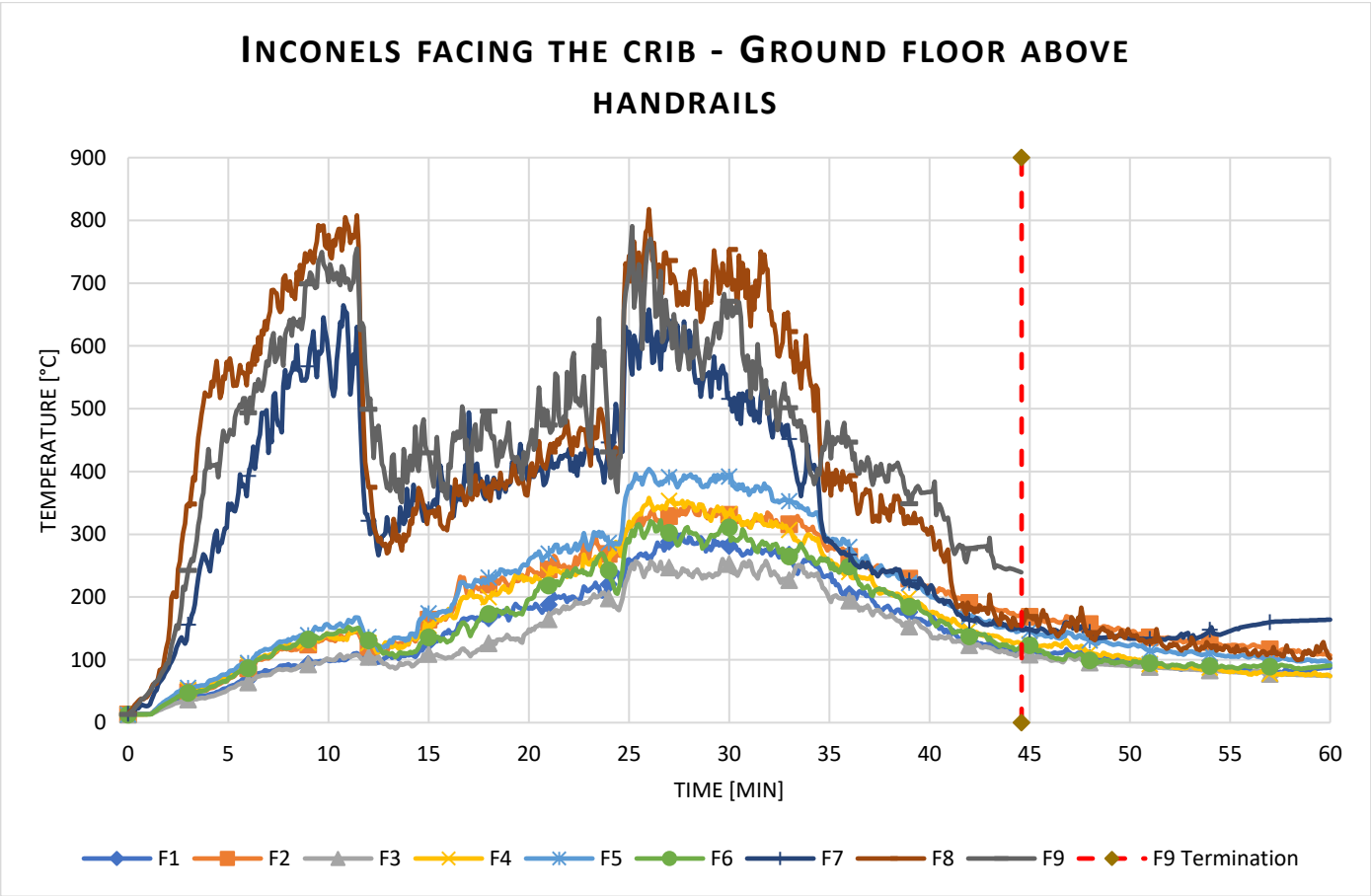

Data measurement from the Inconels on 1st floor

Layout

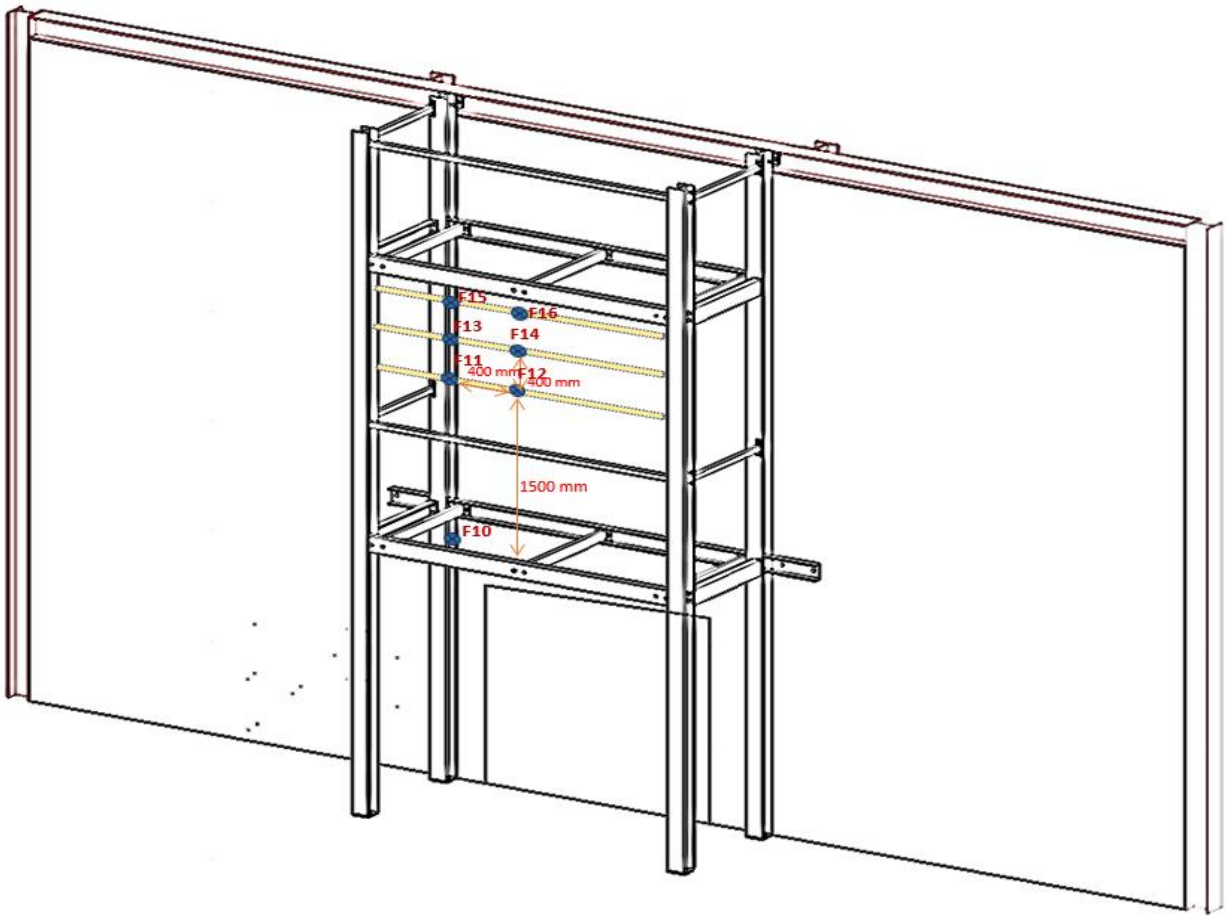

Temperature measured from the Inconels facing outwards on 1st floor on floor and above handrails

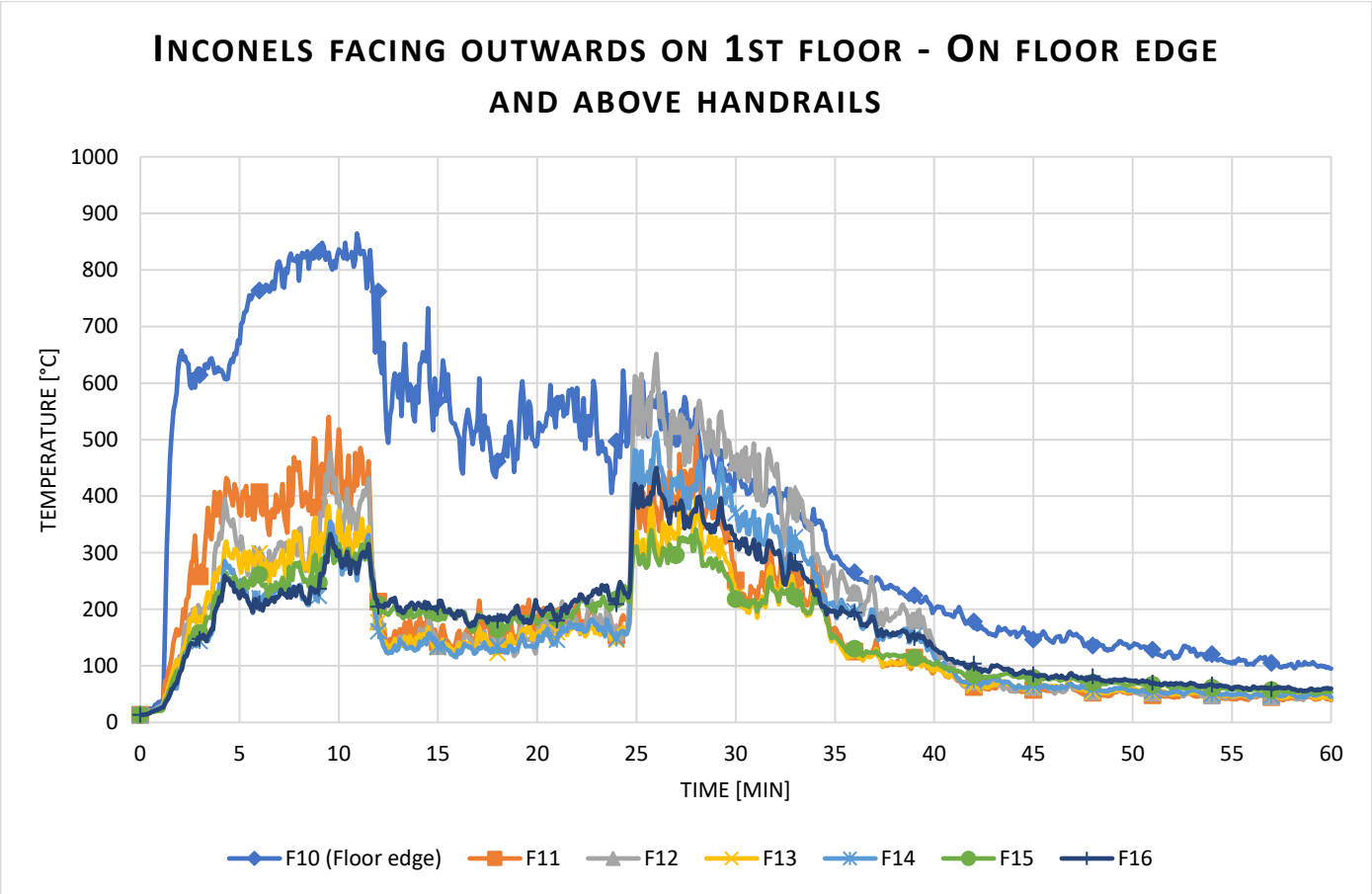

Data measurement from the Inconels on 2nd floor

Layout

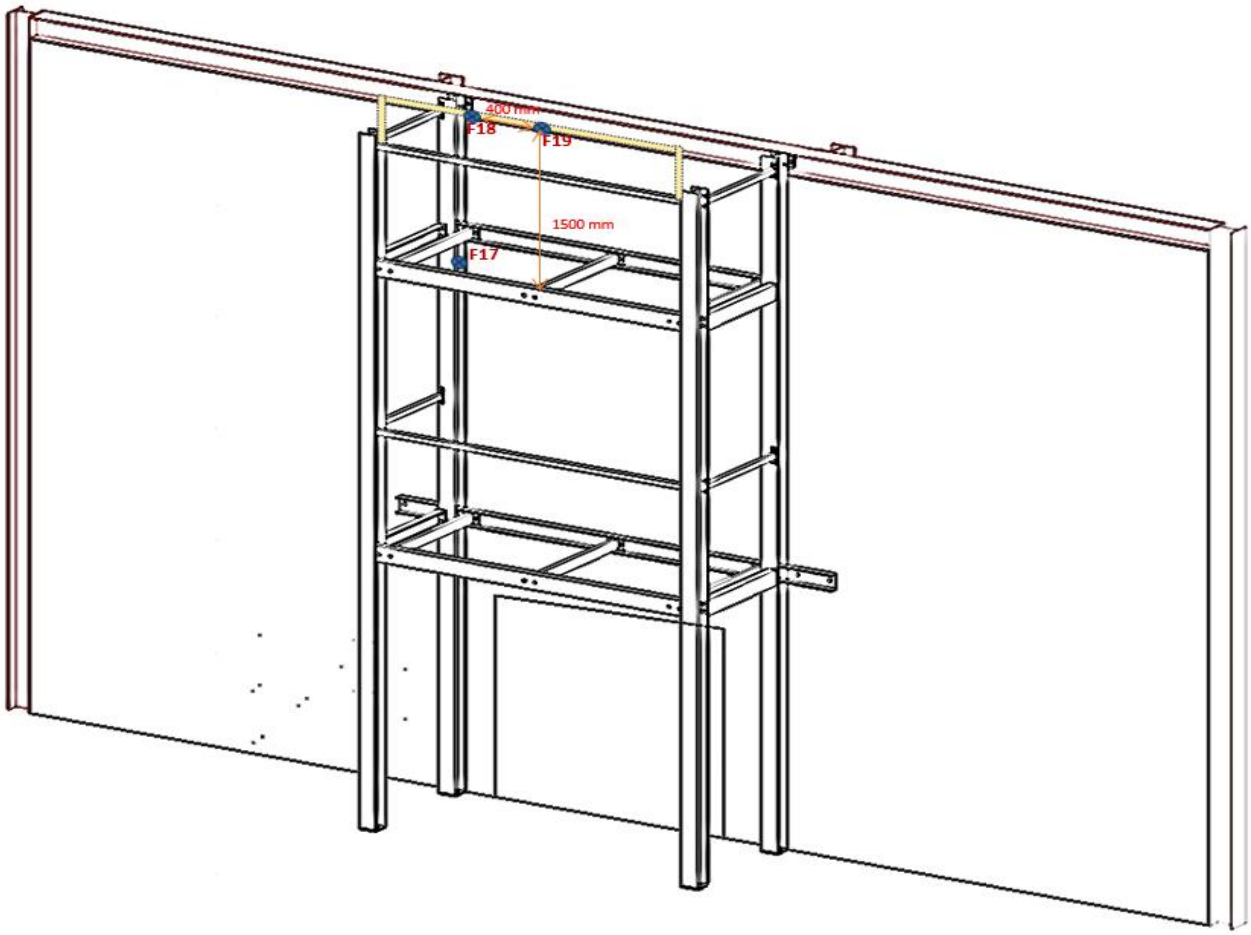

Temperature measured from the Inconels facing outwards on 2nd floor on floor and above handrails

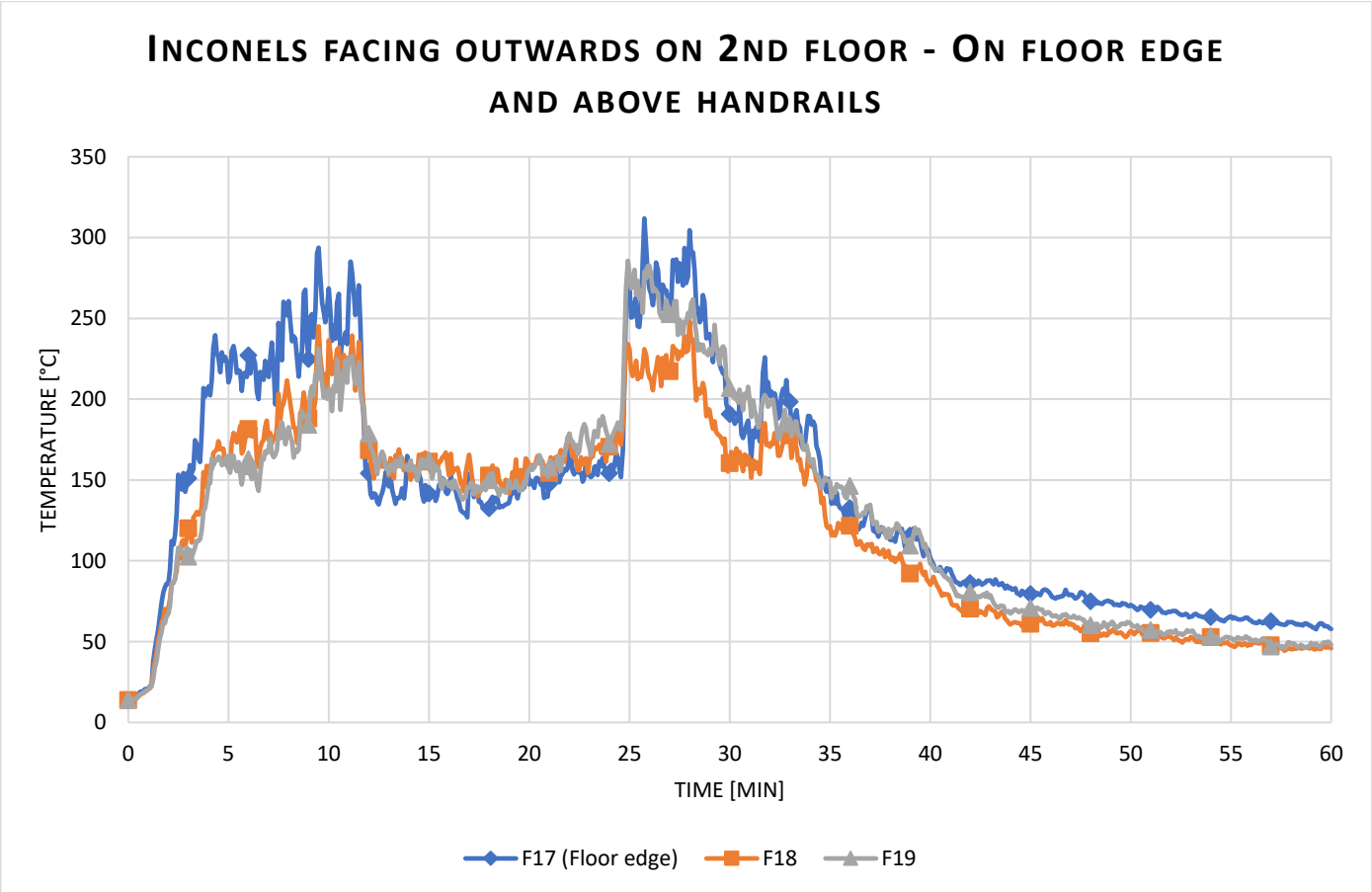

4. PICTURES TAKEN DURING THE TEST

80:09:89
DATE: 31/01/2024

00:03:00
DATE: 31/01/2024

00:06:42
DATE: 31/01/2024

S3
S2

00:25:00

0:38:48

0:45:29

Test date: 11th of April 2024

Project Nr: EUI-23-000746

Test Nr: EUI-23-CHB-000746F

1. INSTRUMENTATION LAYOUT

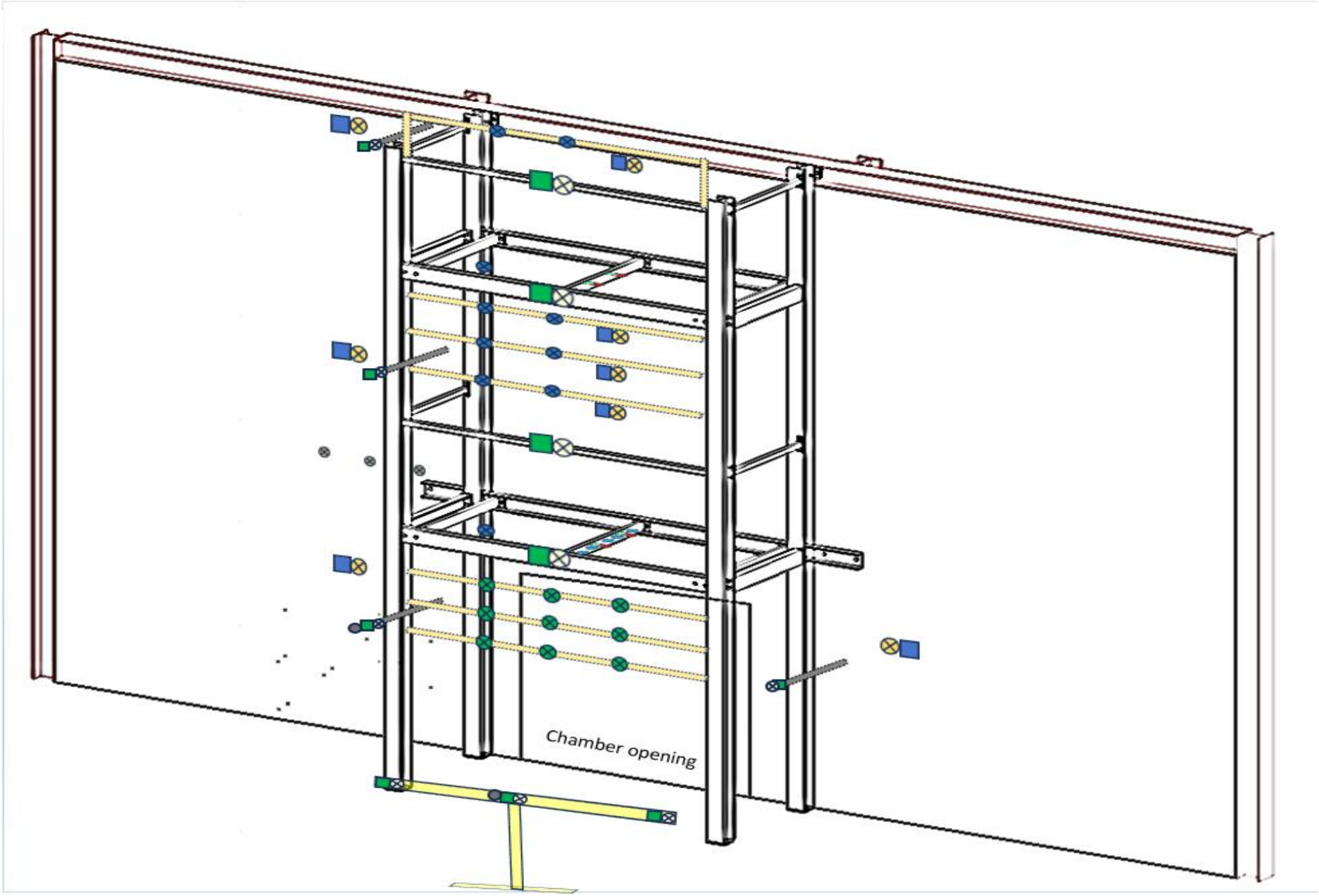

Plate TC on exposed face

Inconel TC on exposed face

Inconel TC on wall

Plate TC on wall

Heat flux meter

2x Plate TC's underside the Balcony floor –
At 450 mm and 900 mm from the wall

2x Inconel TC's underside the Balcony floor –
At 450 mm and 900 mm from the wall

3m long TC facing outwards,
extends out by 50 mm

TC on the steel C-section
S4 – exposed edge of wall
S5 – 300mm away from the wall
S6 – 600mm away from the wall
S7 – 900mm away from the wall
S8 – 1200mm away from the wall

3m long TC facing the crib,
extends out by 50 mm

Nomenclature:

The first word of each acronym is to identify their position:

G - Ground floor

S – Side edge to the chamber opening

M – Middle floor

T – Top floor

F – Front facing Inconels

The second word denotes the instrument:

Fluxmeter (R), Plate TC (P), Inconel (T)

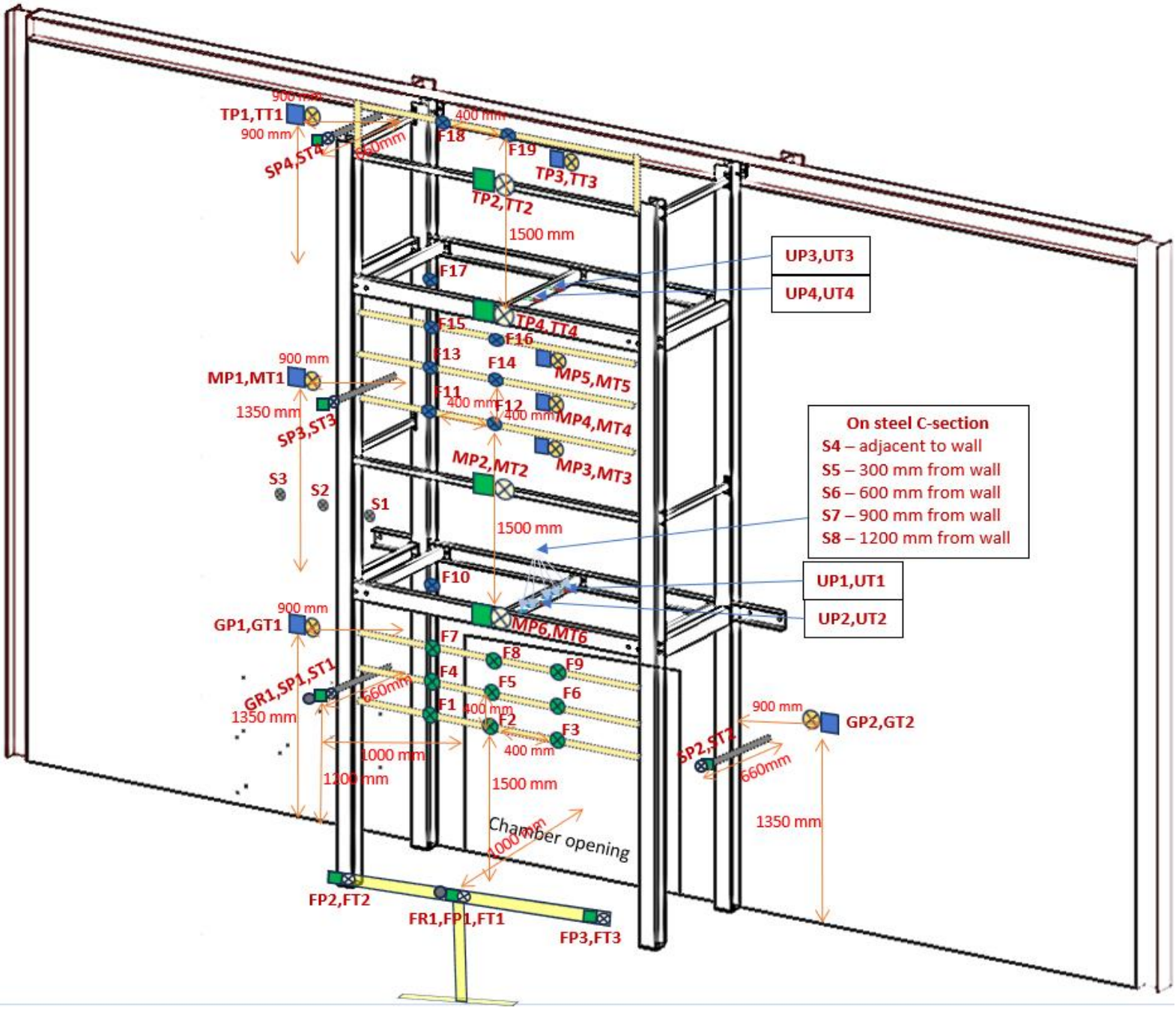
TP1,TT1
900 mm
SP4,ST4
660mm
400 mm
F18
F19
TP3,TT3
TP2,TT2
1500 mm
F17
UP3,UT3
UP4,UT4
TP4,TT4
F15
F16
F13
F14
MP5,MT5
MP1,MT1
F11
F12
MP4,MT4
1350 mm
SP3,ST3
MP3,MT3
MP2,MT2
S3
S2
S1
On steel C-section
S4 – adjacent to wall
S5 – 300 mm from wall
S6 – 600 mm from wall
S7 – 900 mm from wall
S8 – 1200 mm from wall
F10
UP1,UT1
UP2,UT2
GP1,GT1
MP6,MT6
F7
F8
F9
F4
F5
F6
GR1,SP1,ST1
F1
F2
F3
GP2,GT2
SP2,ST2
1000 mm
1200 mm
Chamber opening
FP2,FT2
FR1,FP1,FT1
FP3,FT3

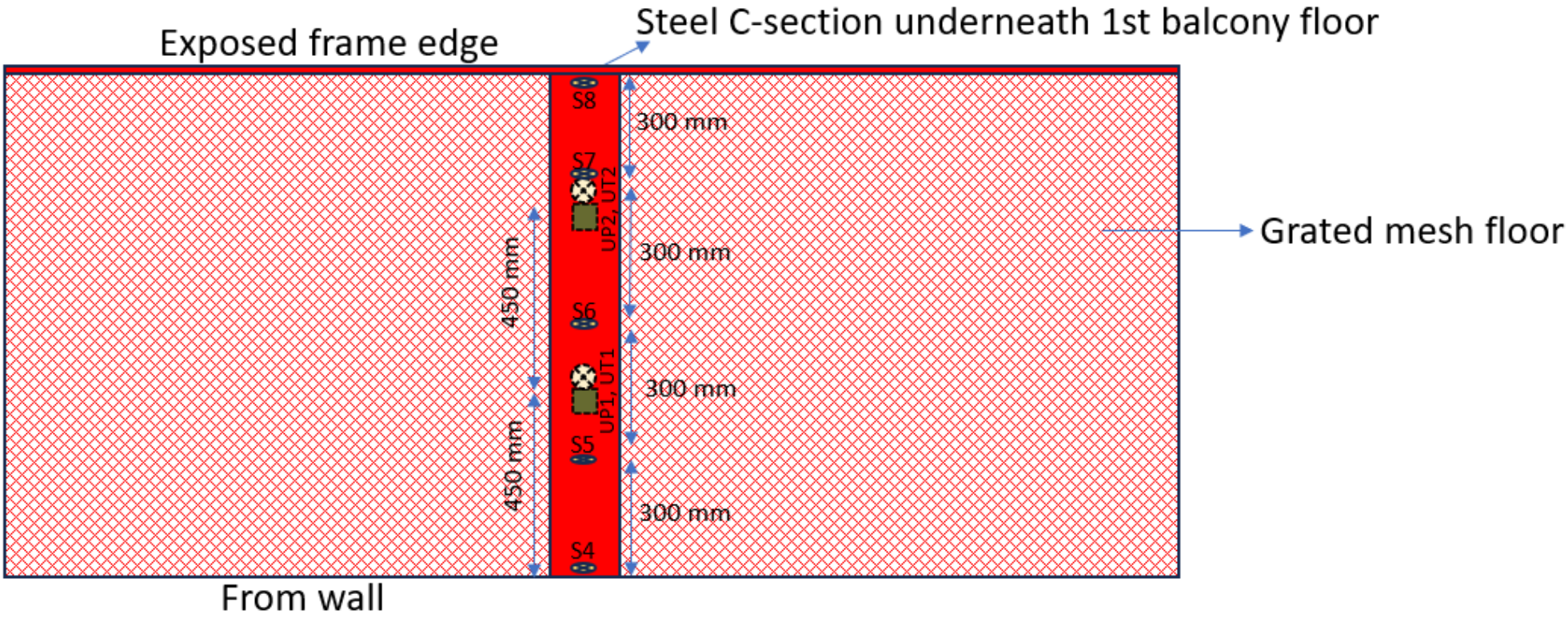

S4 – 10 mm from the wall on Steel C section to measure steel temperature
S5 – 300 mm from the wall on Steel C section to measure steel temperature
S6 – 600 mm from the wall on Steel C section to measure steel temperature
S7 – 900 mm from the wall on Steel C section to measure steel temperature
S8 – 1200 mm from the wall on Steel C section to measure steel temperature

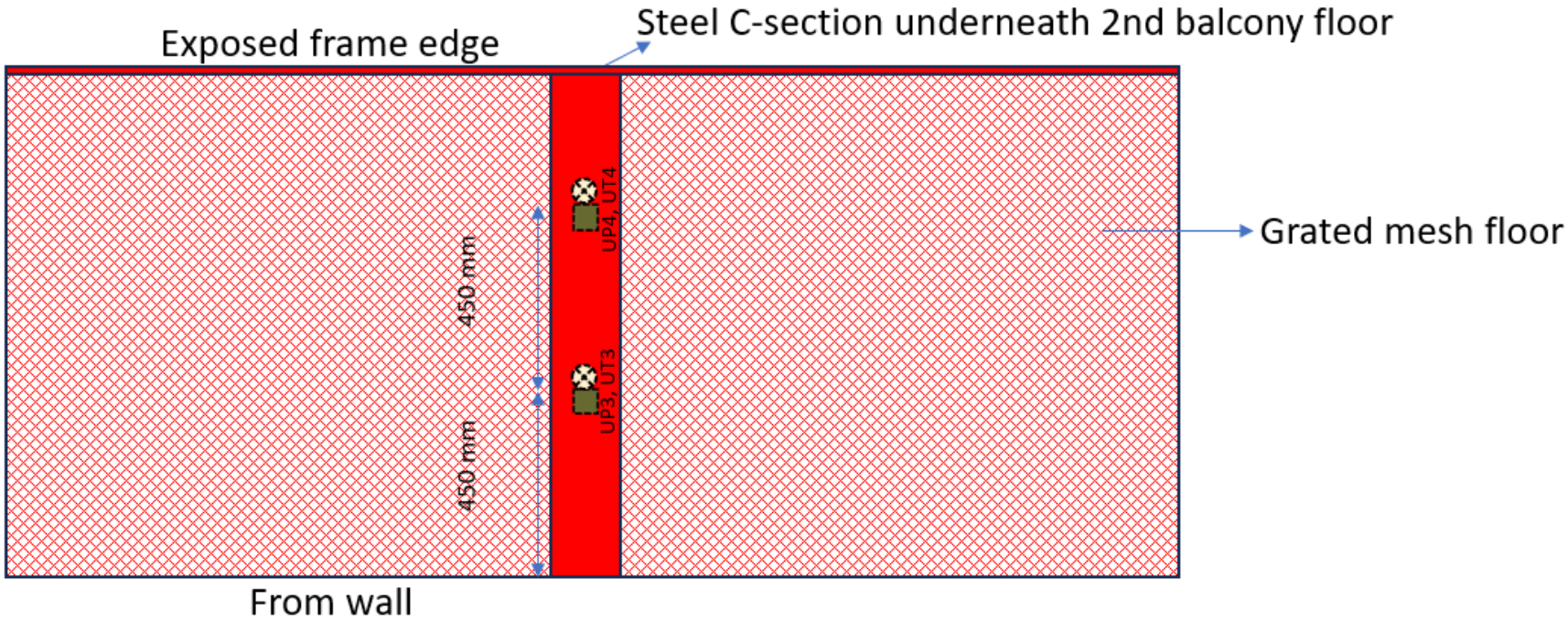
Exposed frame edge
Steel C-section underneath 2nd balcony floor
Grated mesh floor
450 mm
450 mm
UP4, UT4
UP3, UT3
From wall

Figure 1: Elevation view of the system during build.

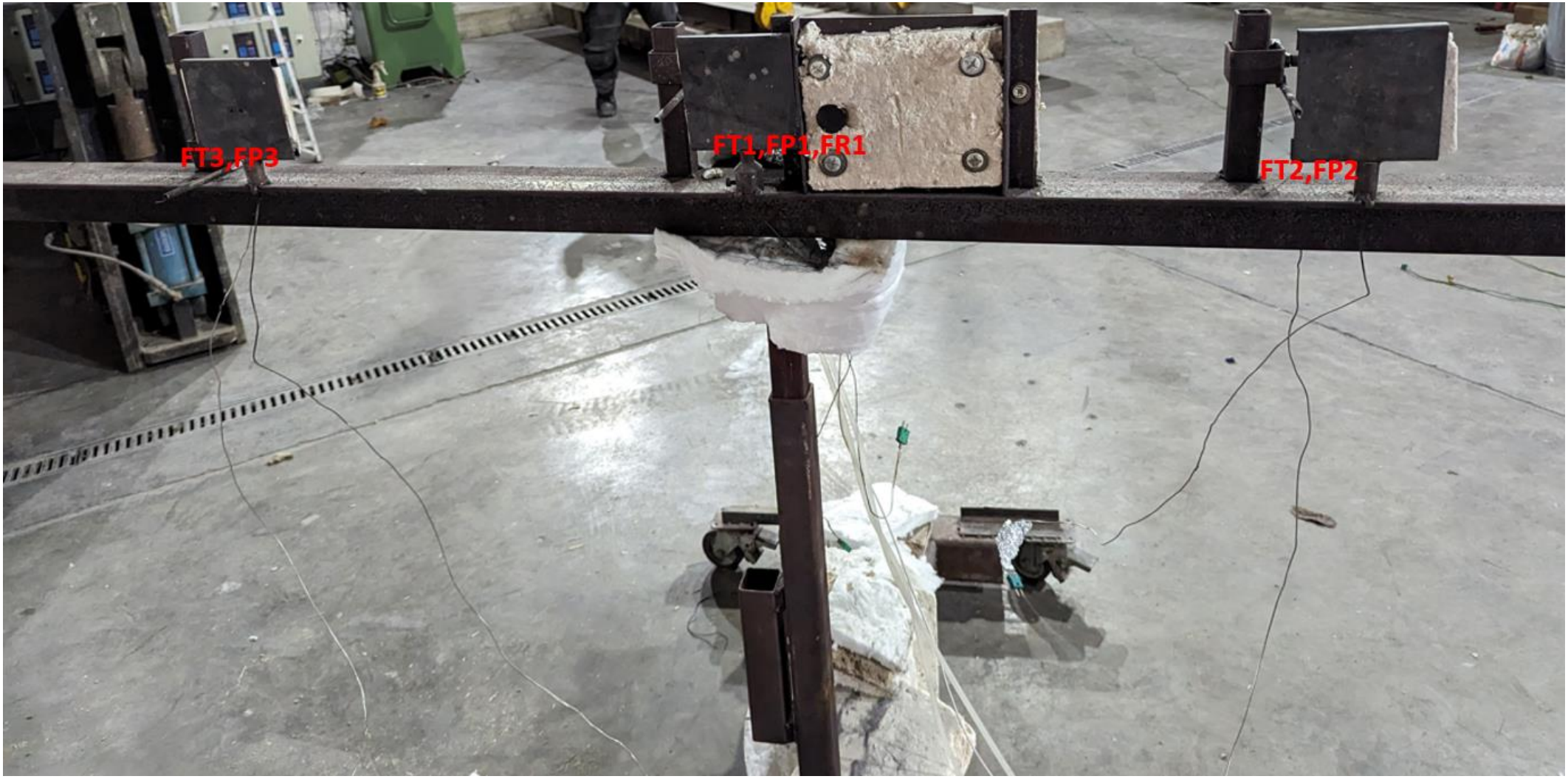

Figure 2: The front facing Fluxmeter, Plate TC's and Inconels (placed 1m away from the target crib hypothetical position).

2. VISUAL OBSERVATIONS DURING THE TEST

Time from ignition (min:sec)	***Observation***
00:00	**Ignition of crib.**
01:19	Flames out of combustion chamber
03:14	Target crib installed at 1st floor on flames.
05:45	Smoke arising from the target crib installed at ground floor level.
07:50	Timber decking installed at 1st floor on flames.
11:40	Melting of target crib installed at ground floor was noticed.
12:50	Flaming debris. Delamination of soffit installed underneath 2nd floor was noticed,
13:10	Ground floor target crib on flames. Timber decking on flames.
14:06	Insulation from the soffit panel installed underneath 1st floor level fell off – the side edge.
18:47	Falling debris.
20:13	Flames flashing up to the 2nd floor soffit panels.
24:27	Wood crib starts to collapse.
26:32	The soffit installed underneath 1st floor level fell off- left side.
27:12	Falling debris.
30:42	The soffit installed underneath 1st floor level fell off- Right side (timber decking on 1st floor directly exposed to fire from here on).
32:30	Timber decking at 2nd floor on flames.
34:17	2nd floor target crib ignited.
39:00	1st decking is now completely burnt into ashes.
39:29	The horizontal box section carrying TC's out of position (F15, F16).
41:19	Falling debris
45:20	Falling debris
46:05	Insulation in the soffit fell off from the 2nd floor- side edge.
50:00	Nothing New to Report.
54:30	Falling debris
60:00	**End of the Test.**

3. DATA RESULTS

Heat Release rate (Hood)

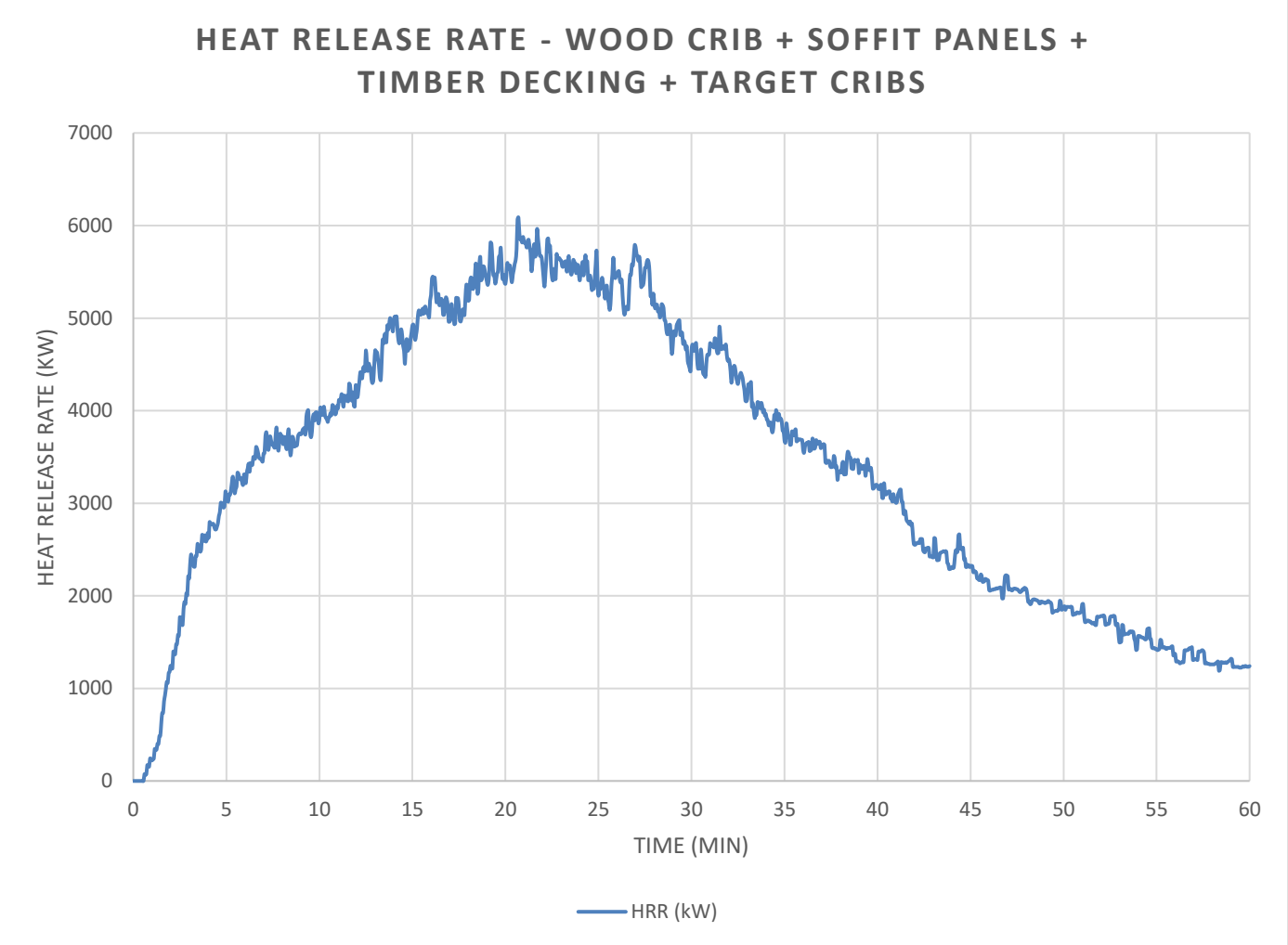

Mass loss

No Mass loss was recorded during this test.

Data measurement at 1m from target crib

Layout

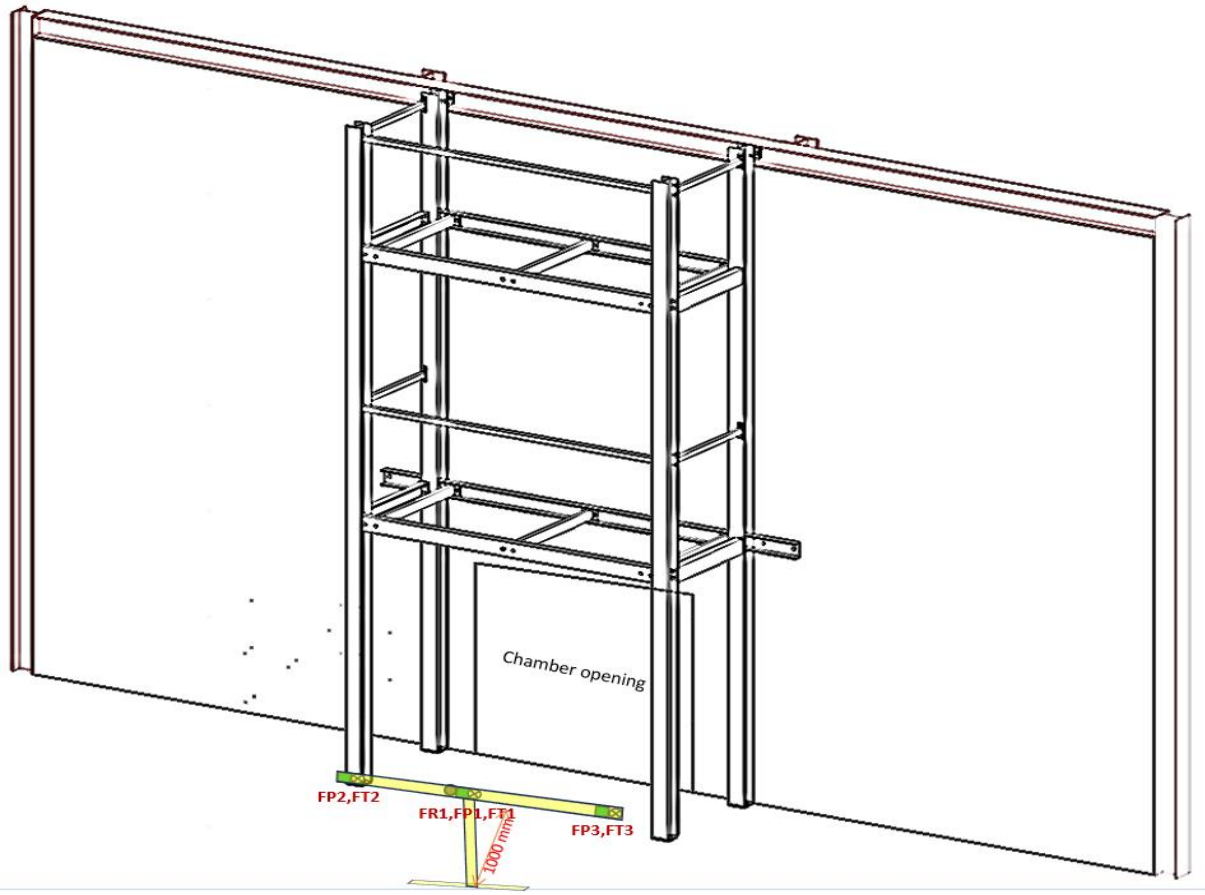

Radiant heat at 1m from target crib

The radiant heat was measured using a water cooled Gardon Guage sensor of range 100 kW/m²:

The heat flux meter was located at 1000 mm from the target crib hypothetical position at mid-height of the wood crib.

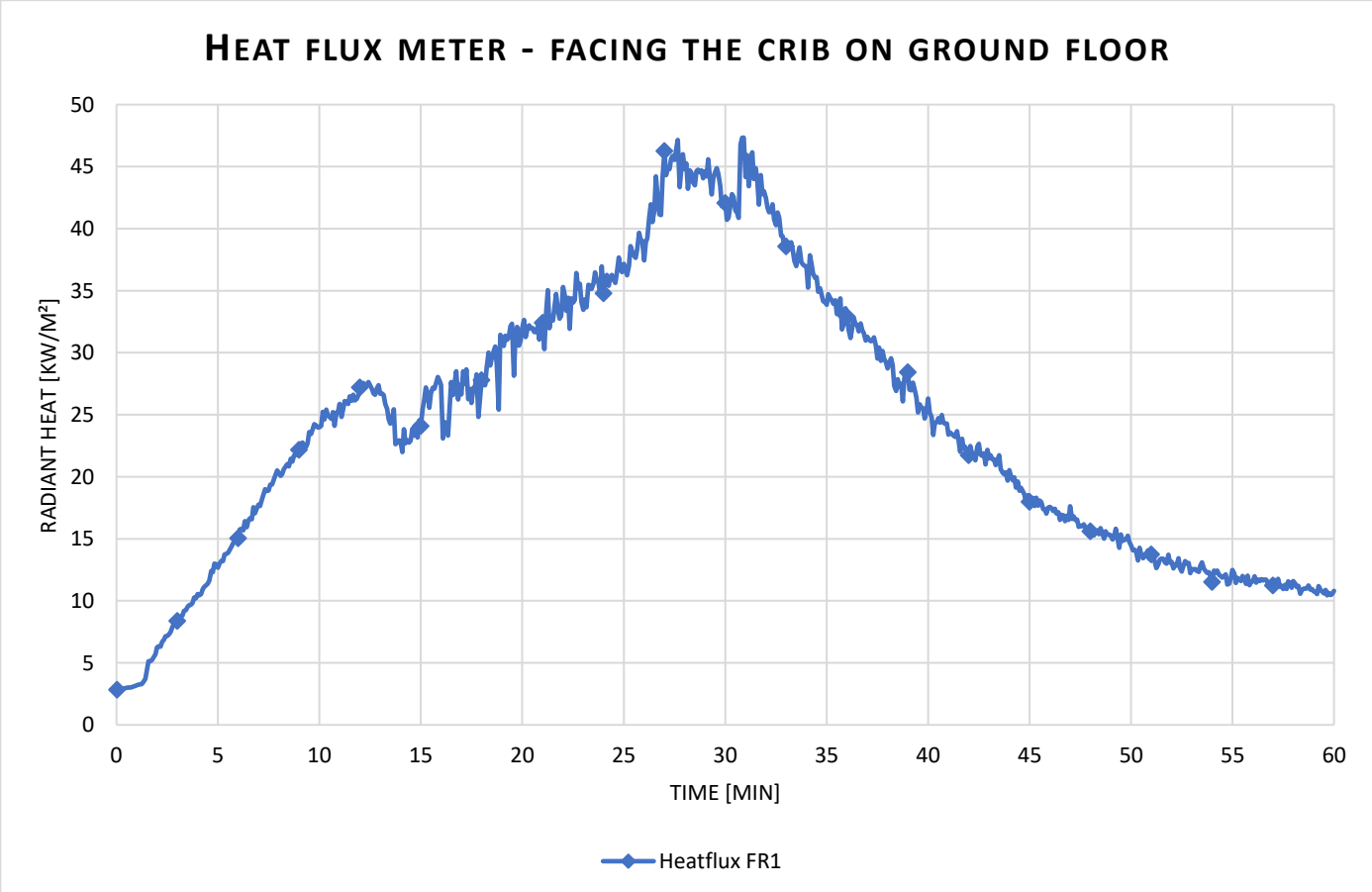

Temperature measured by plate TC's at 1m away from target crib

Ø 1.5 mm mineral insulated thermocouples were placed 1m from the target crib at mid height of wood crib spaced by 500 mm from the centre point ofthe crib. The installation included 3x Inconel thermocouple and 3x plate thermocouples.

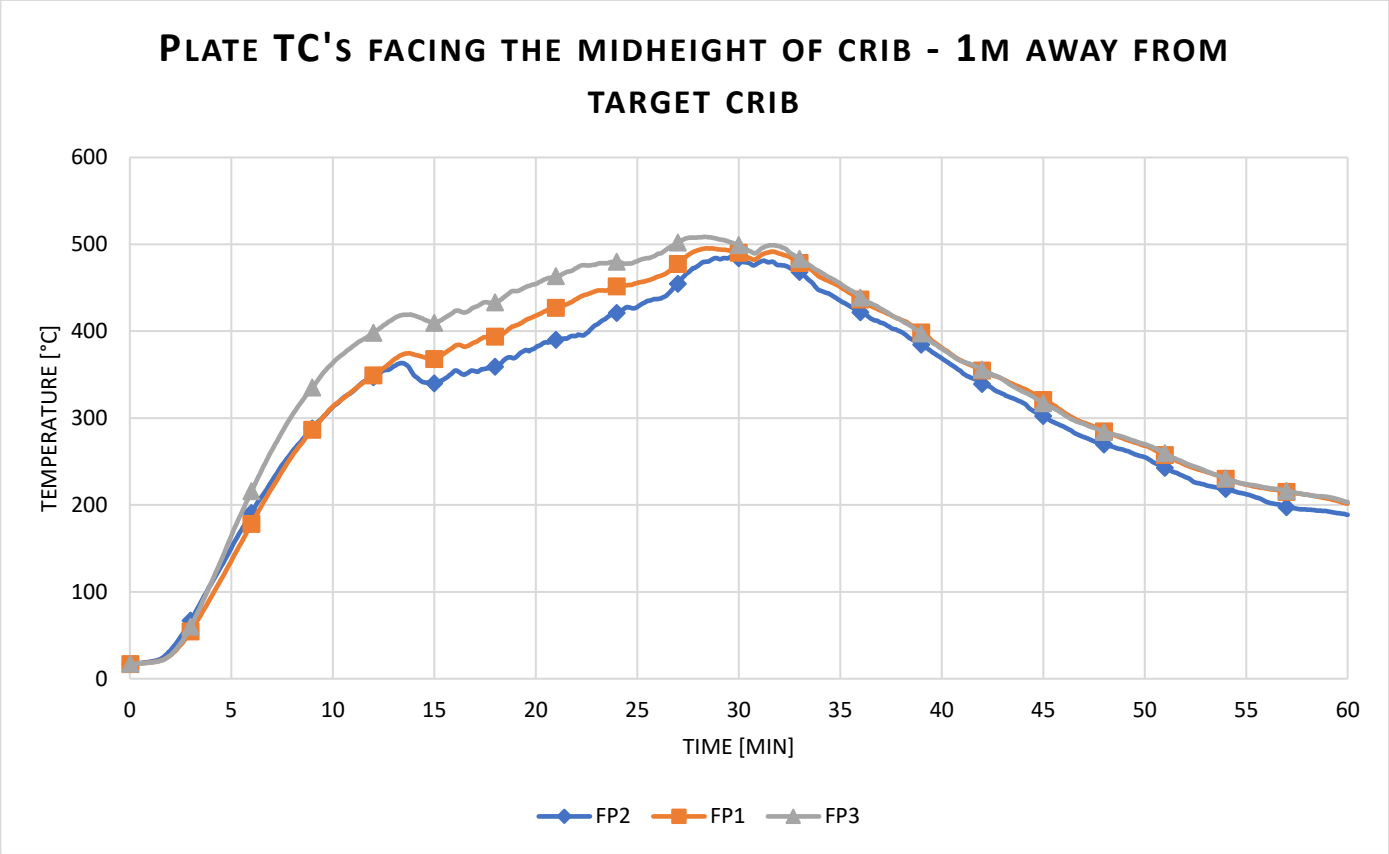

Temperature measured by Inconels at 1m away from crib

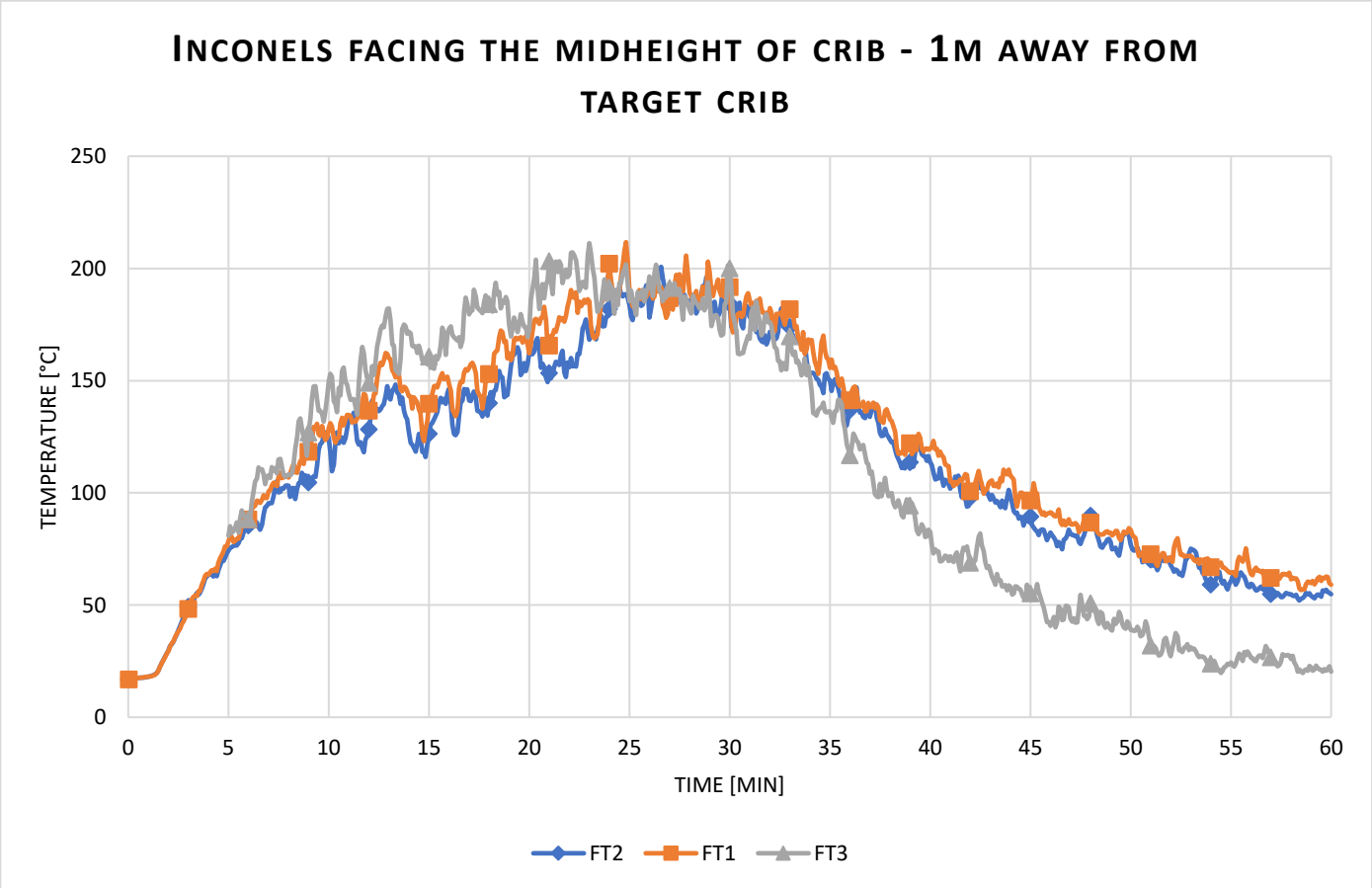

Radiant heat calculated from Plate TC

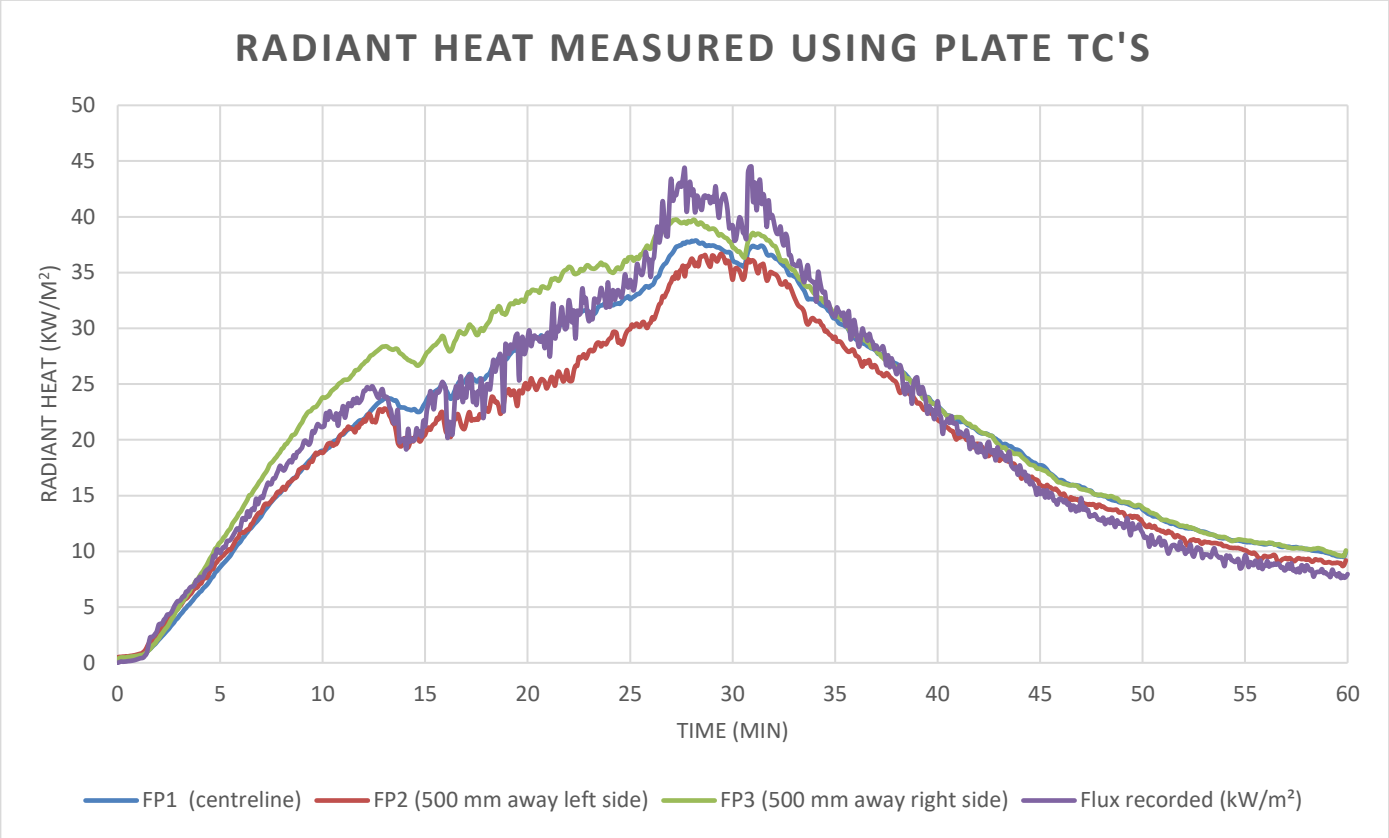

Data measurement from side edges on Ground Floor (660 mm from wall).

Layout

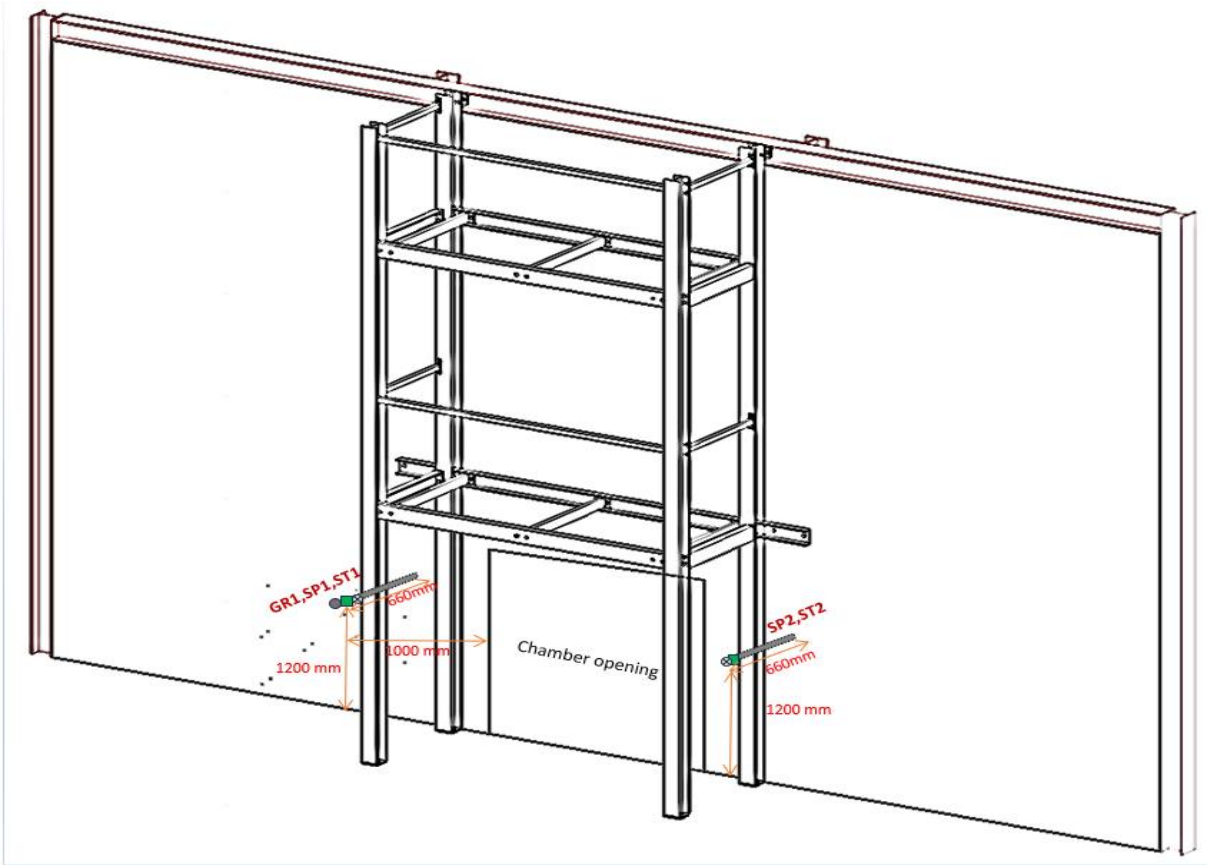

Radiant heat from the flux meter on side edge (660 mm from wall)

The radiant heat was measured using a water cooled Gardon Guage sensor of range 100 kW/m²:

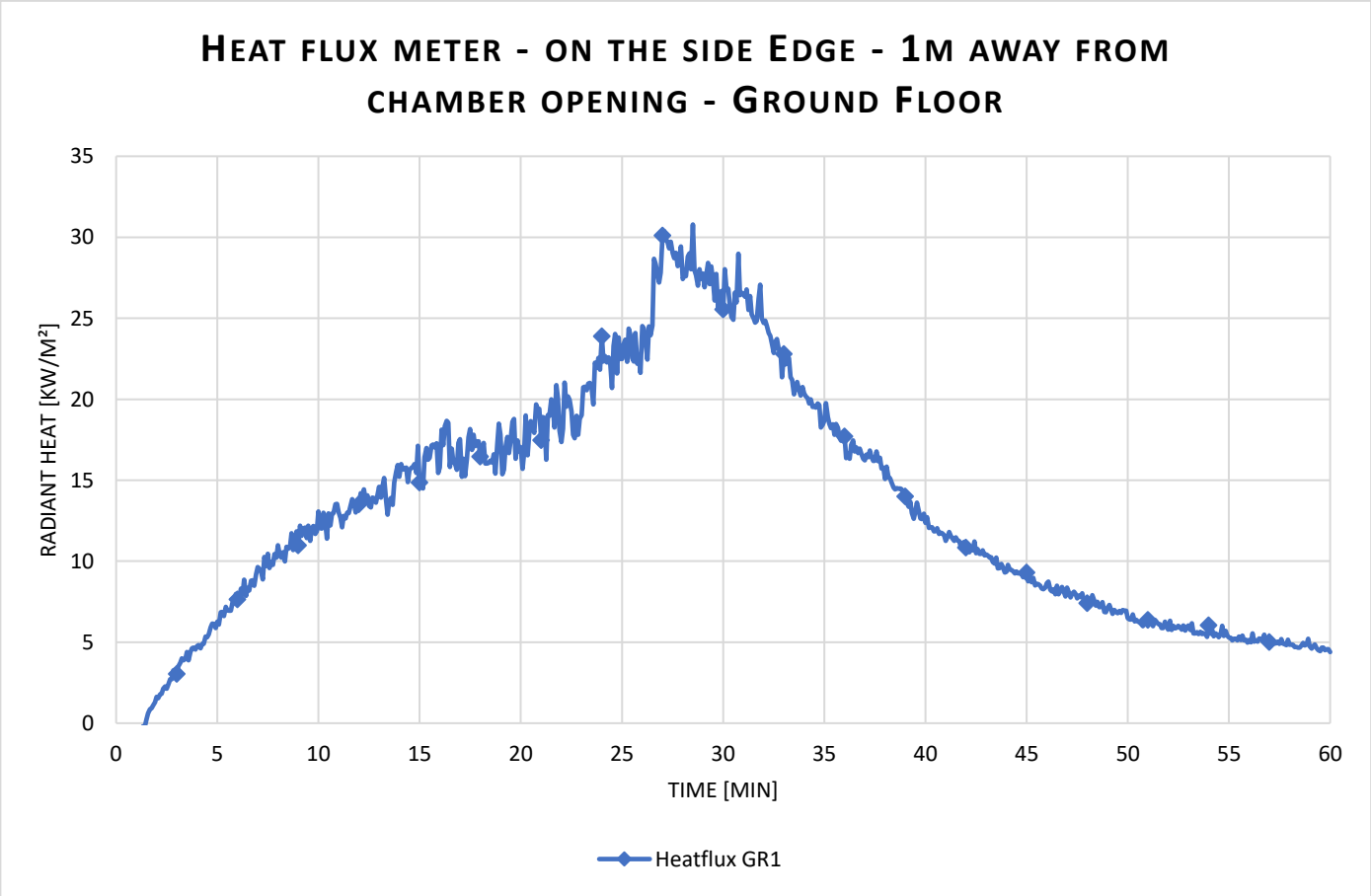

Temperature measured using plate TC's on the side edge

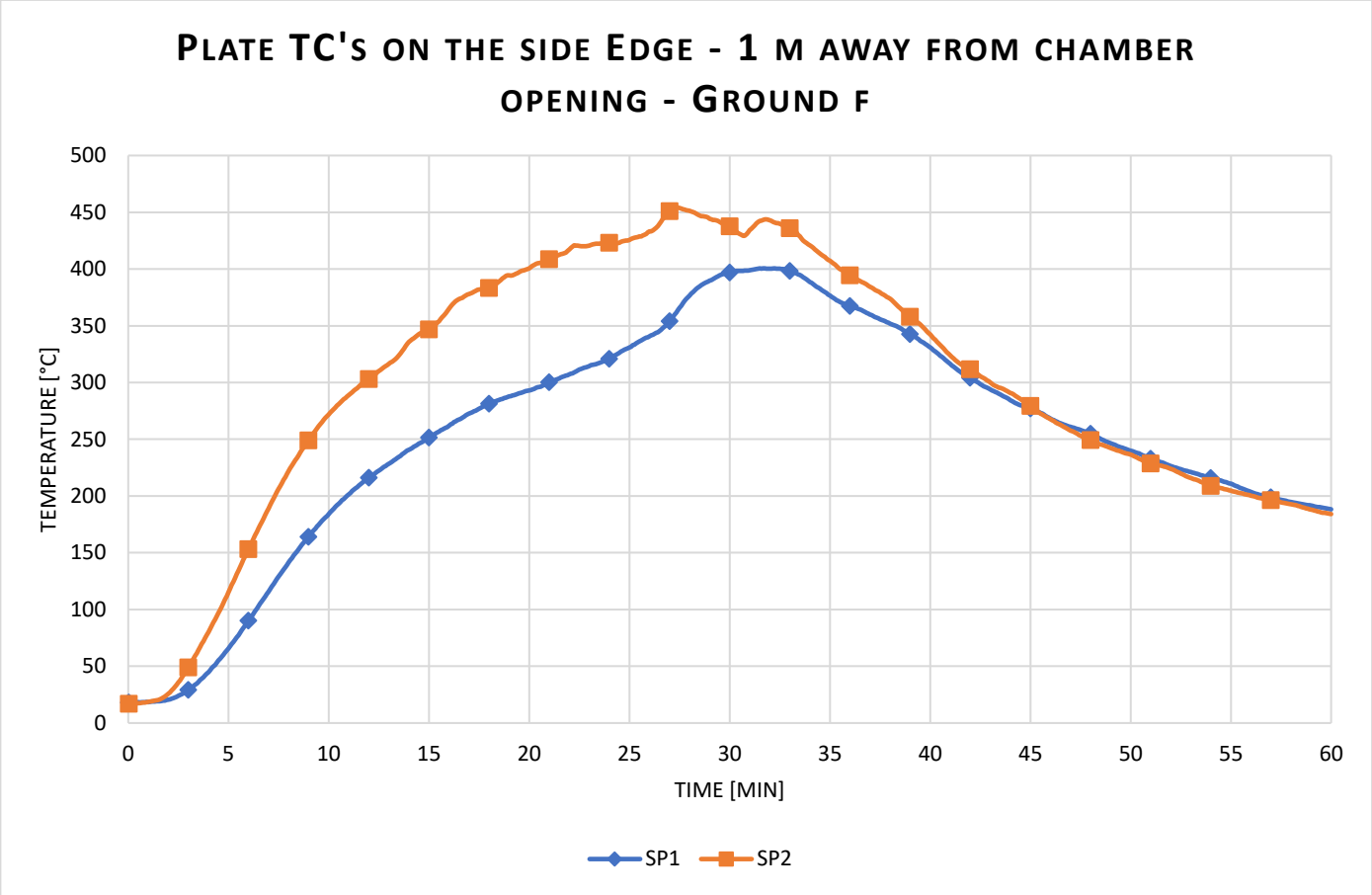

Temperature measured using Inconels on the side edge

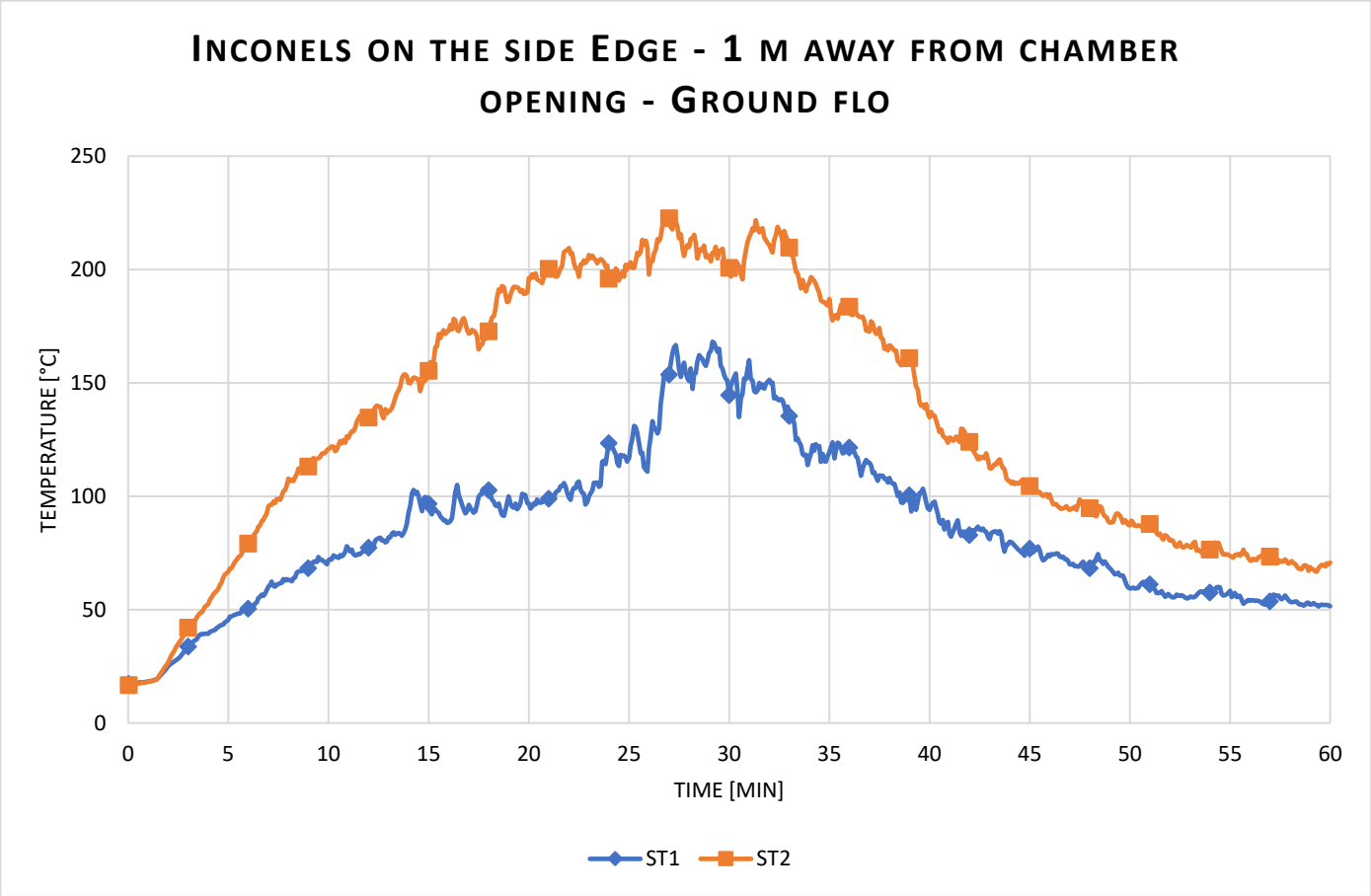

Radiant heat calculated from Plate TC

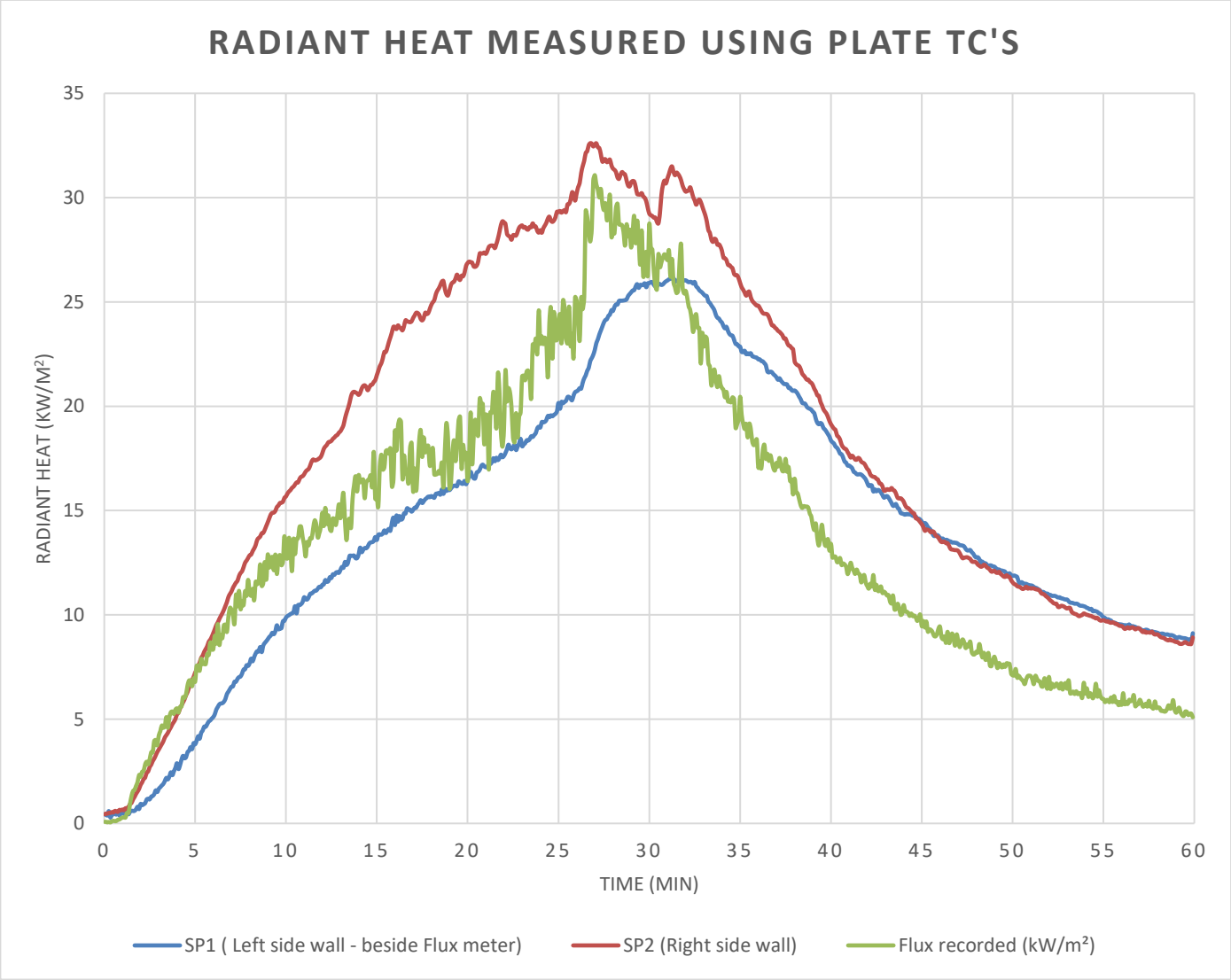

Data measurement from side edges on 1st Floor (660 mm from wall).

Layout

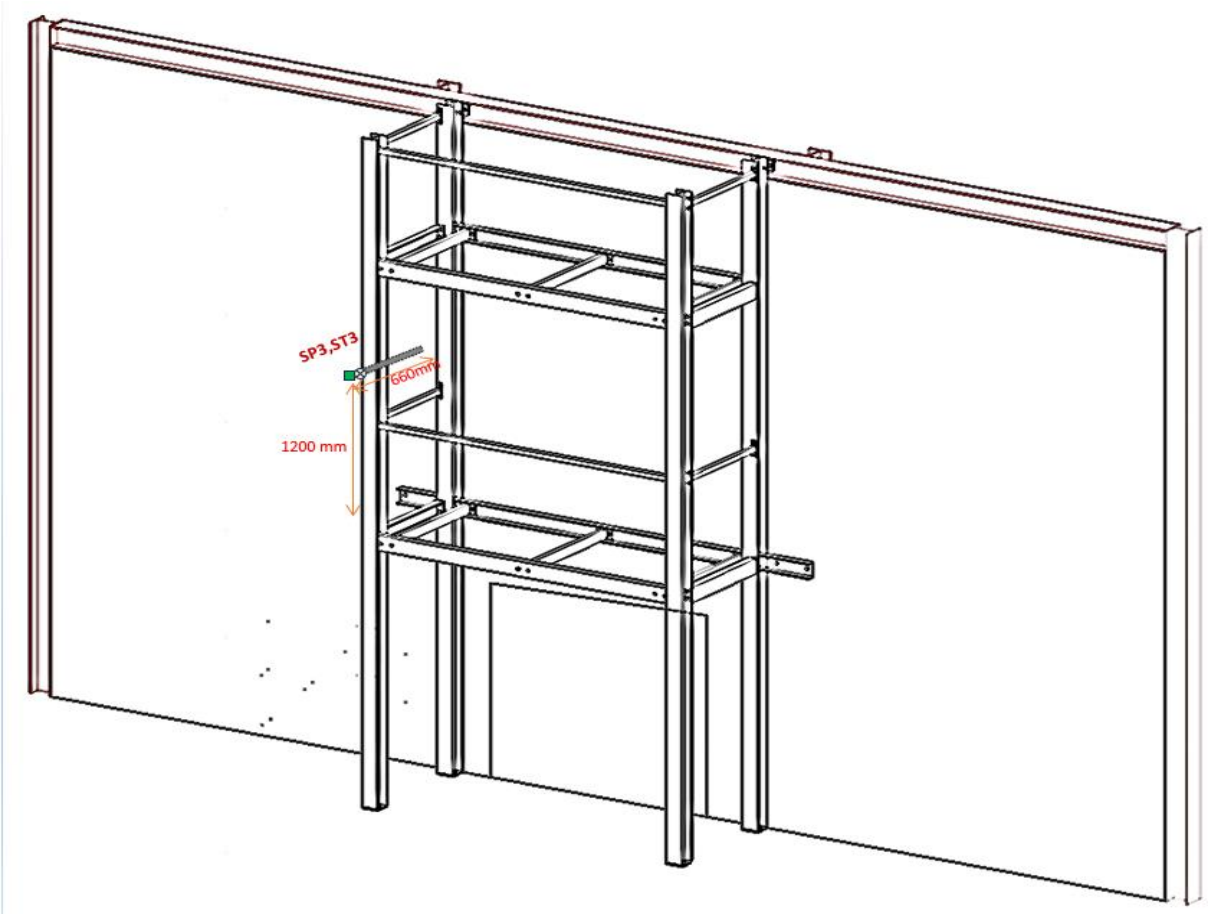

Temperature measured using plate TC on the side edge – 1st floor

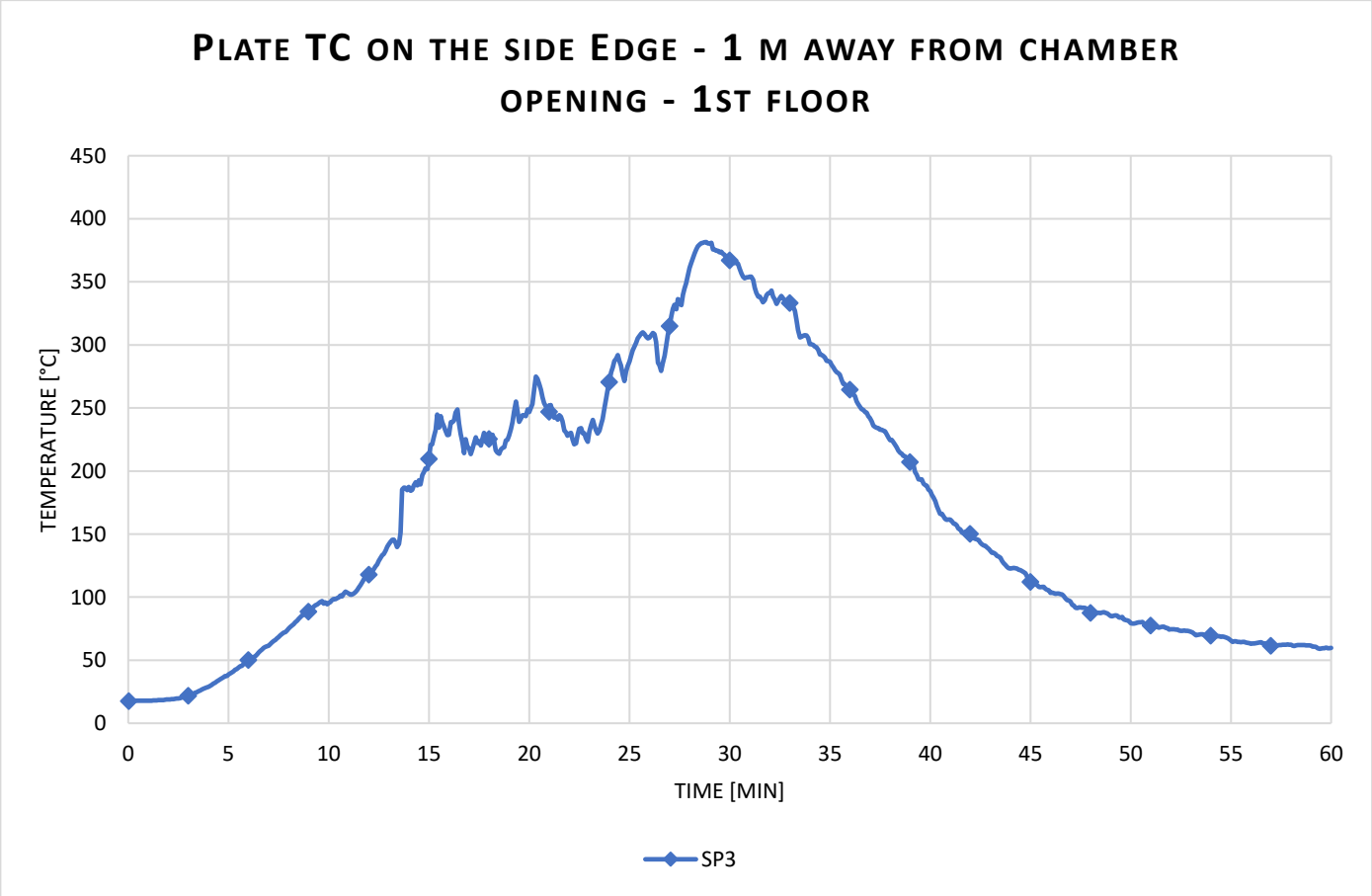

Temperature measured using Inconel on the side edge – 1st floor

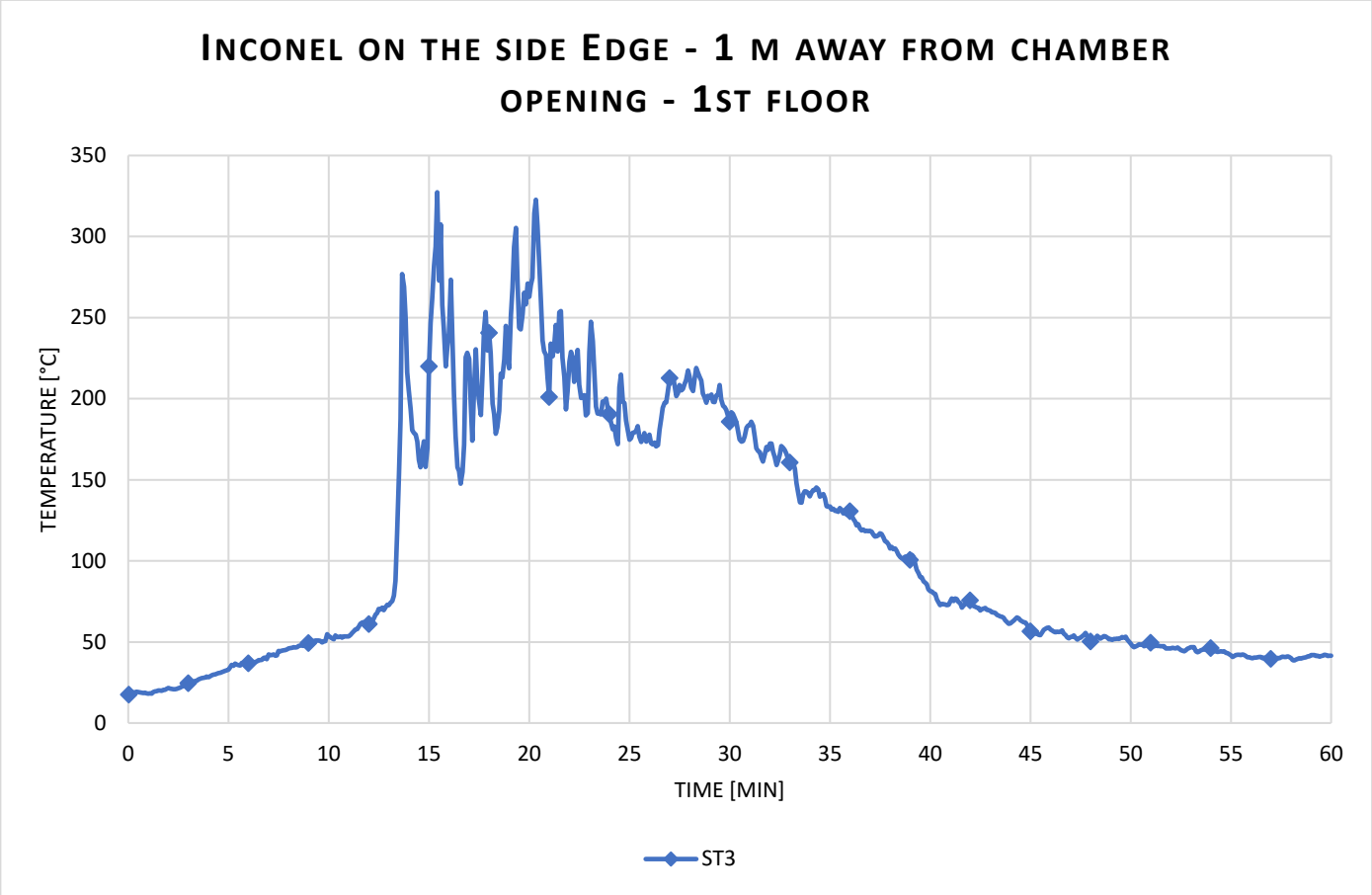

Radiant heat calculated from Plate TC

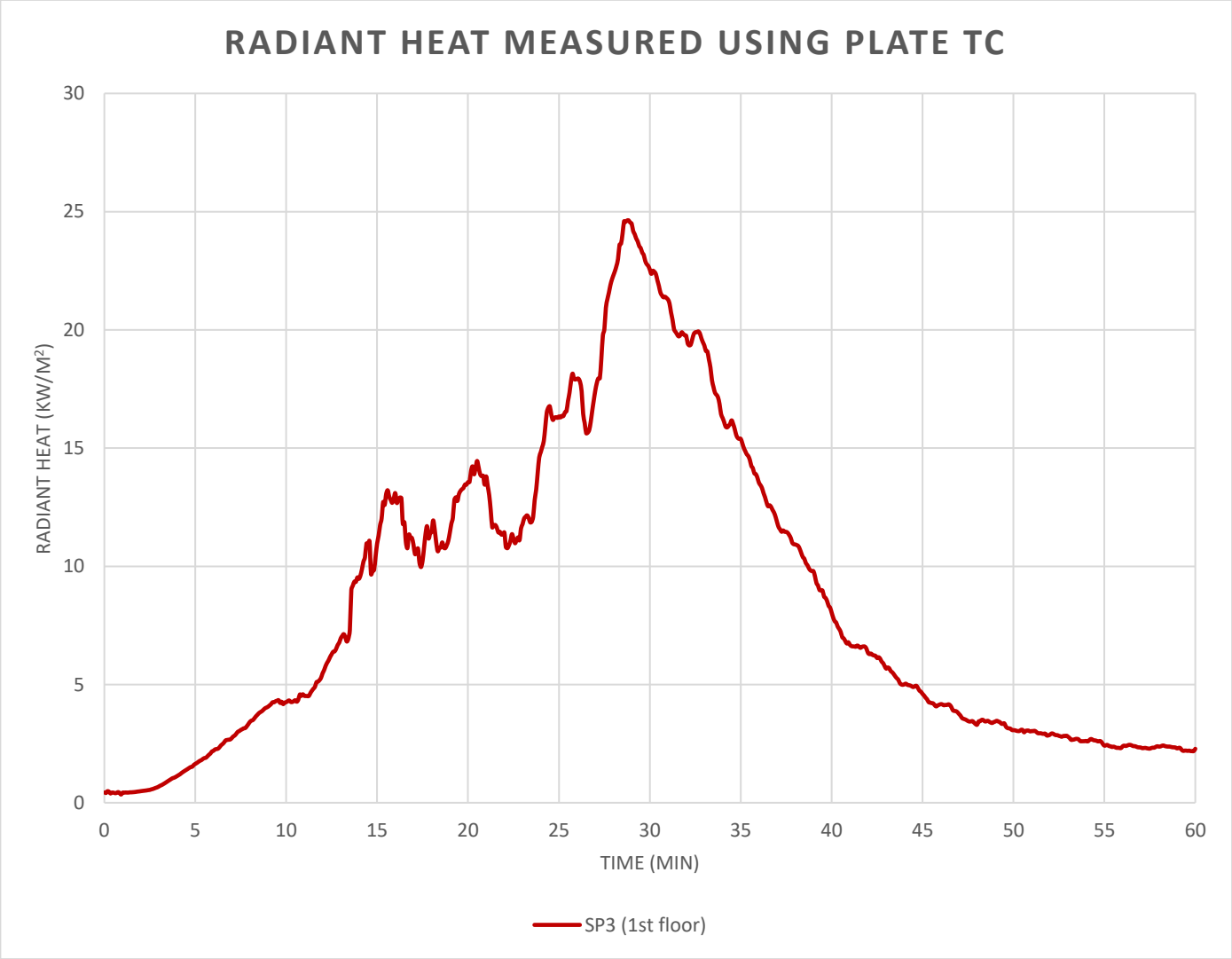

Data measurement from side edges on 2nd Floor (660 mm from wall).

Layout

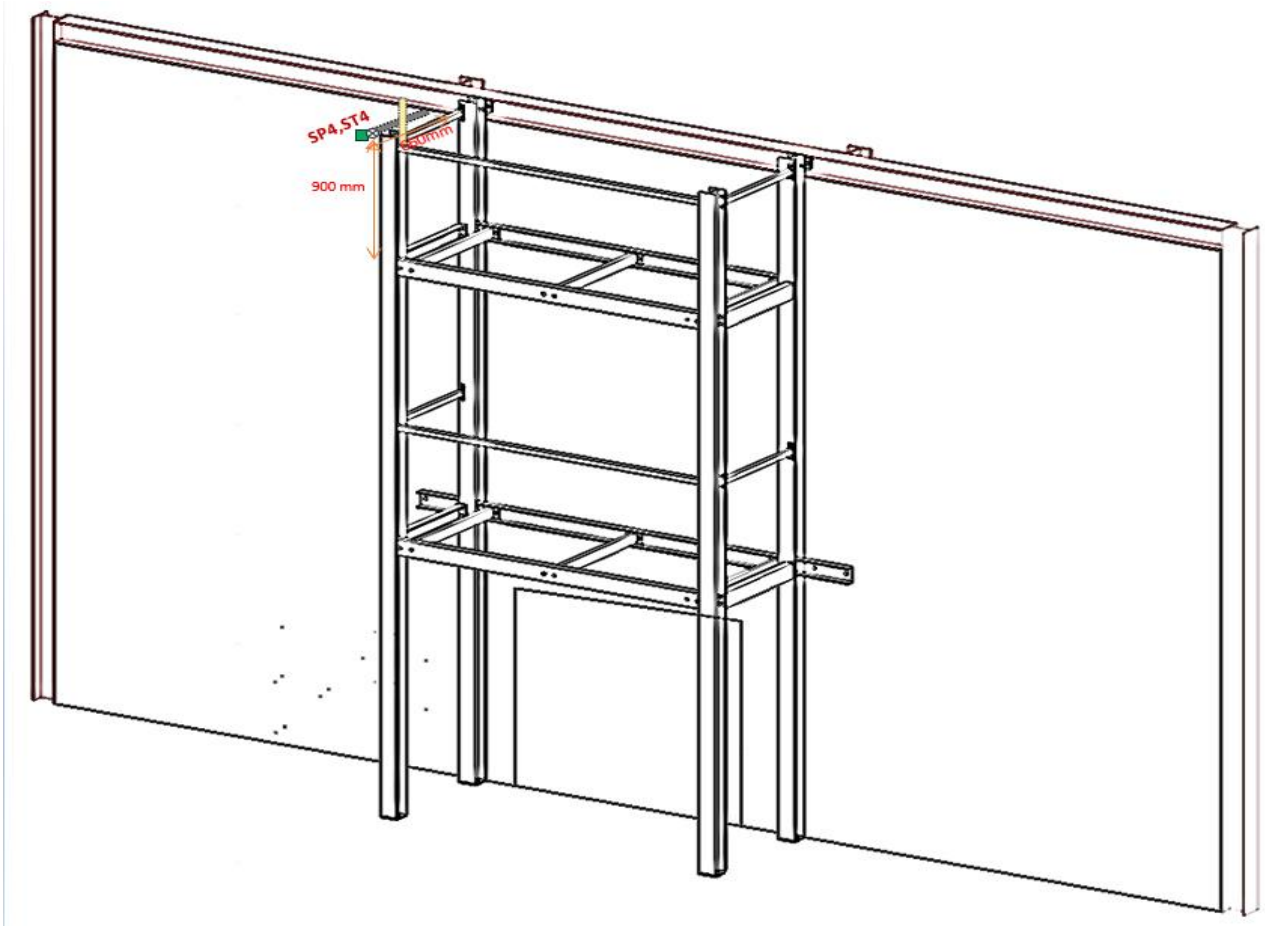

Temperature measured using plate TC's on the side edge – 2nd floor

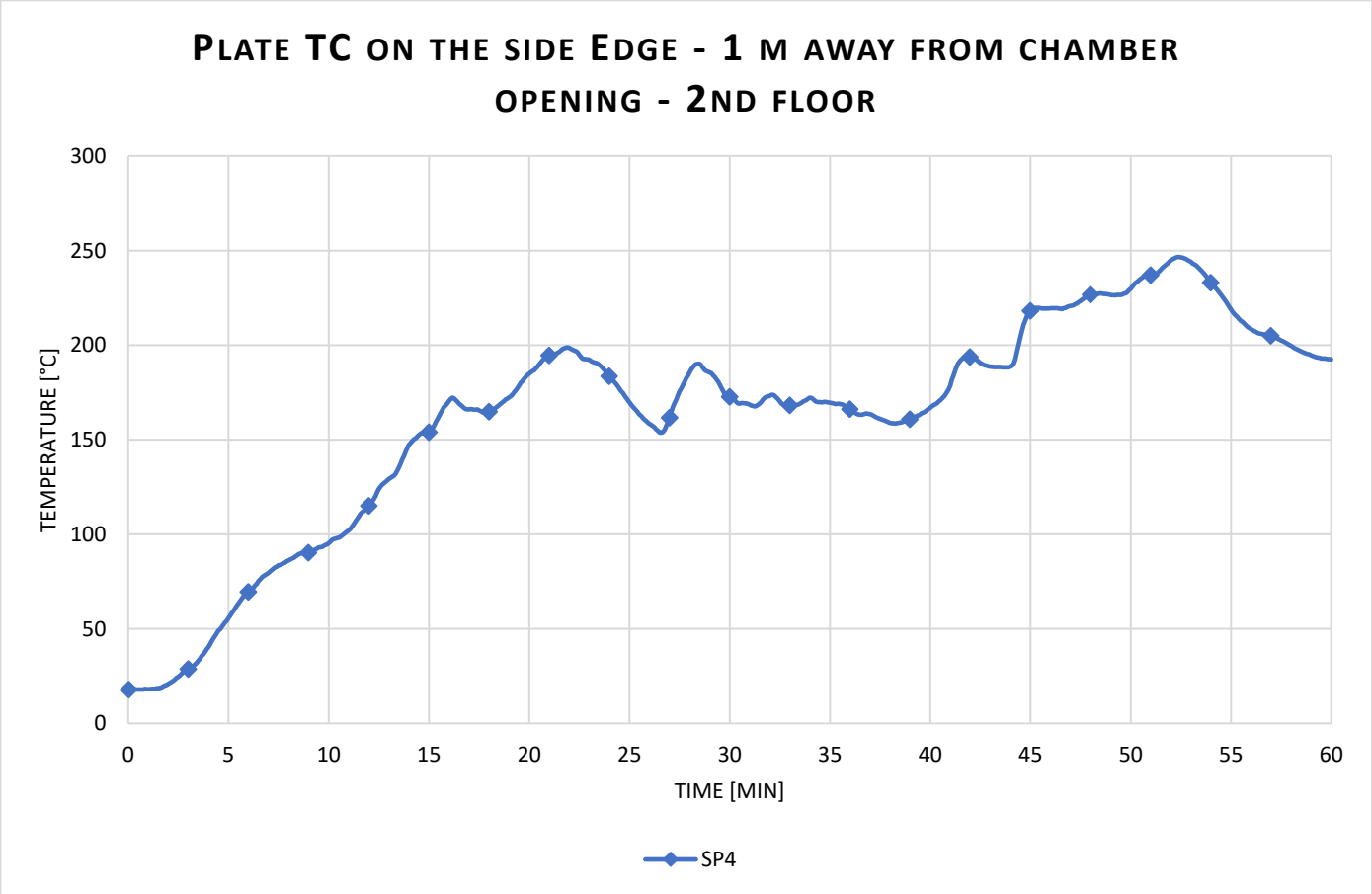

Temperature measured using Inconels on the side edge – 2nd floor

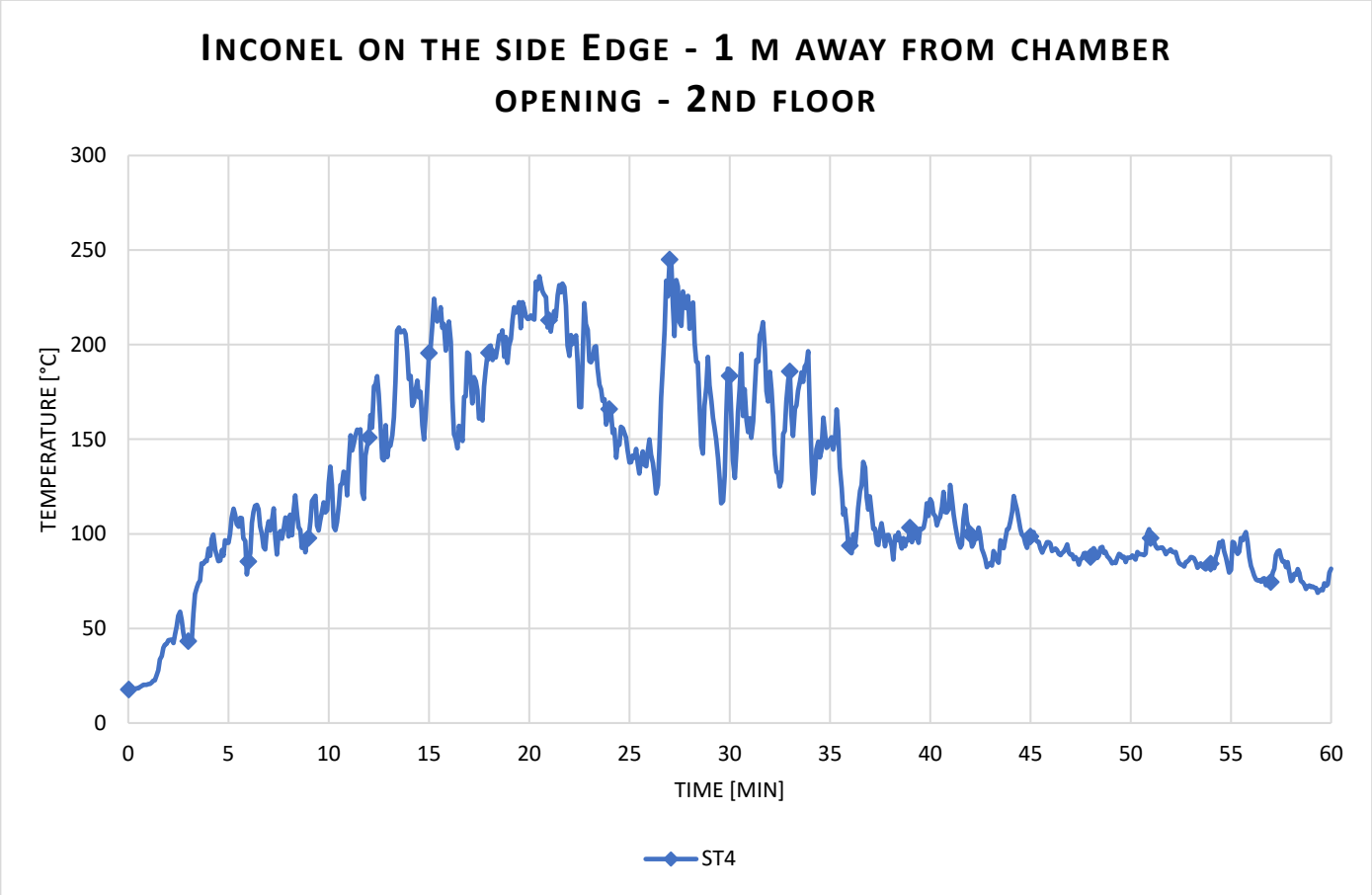

Radiant heat calculated from Plate TC

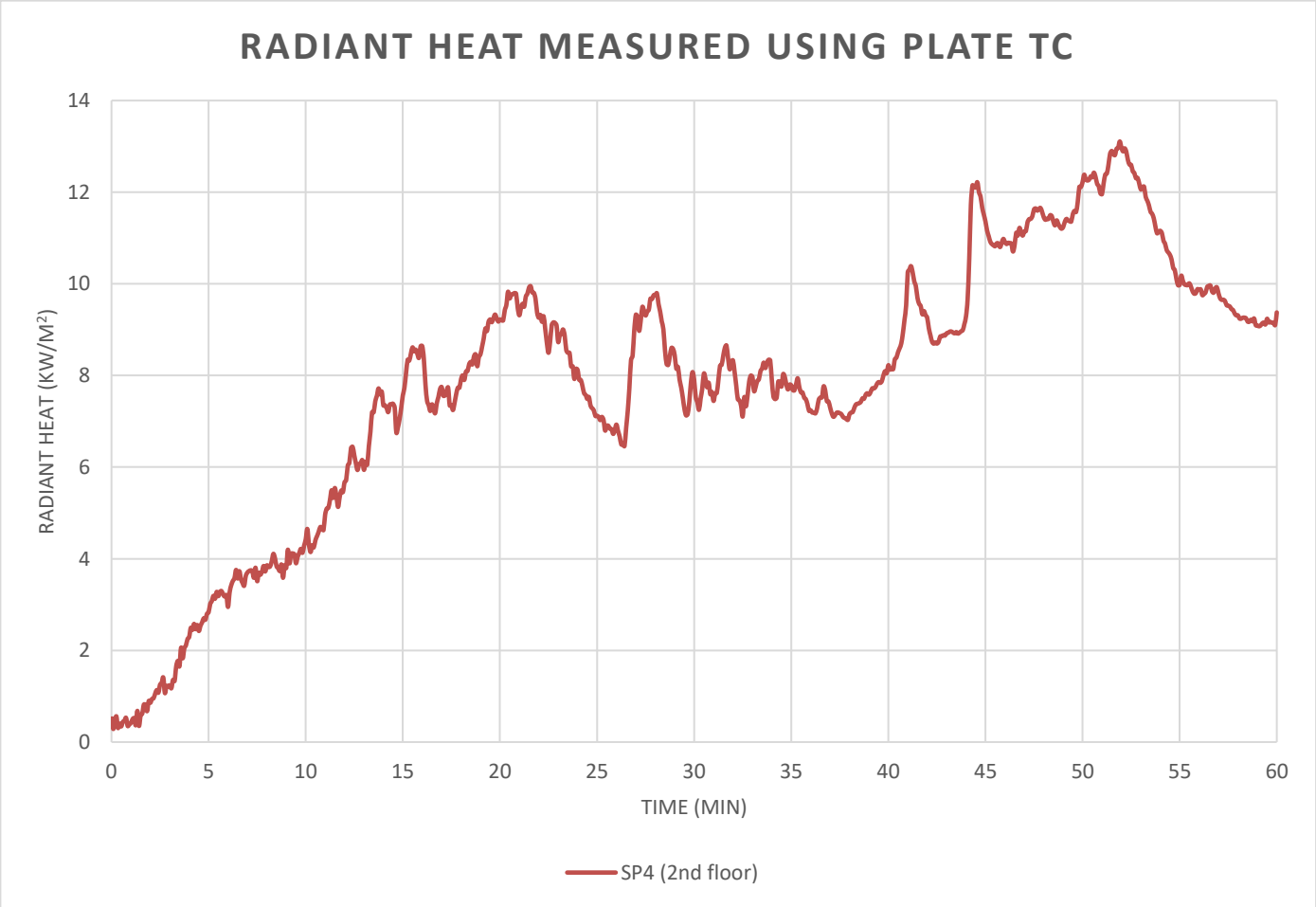

Data measurement from 1st floor wall.

Layout

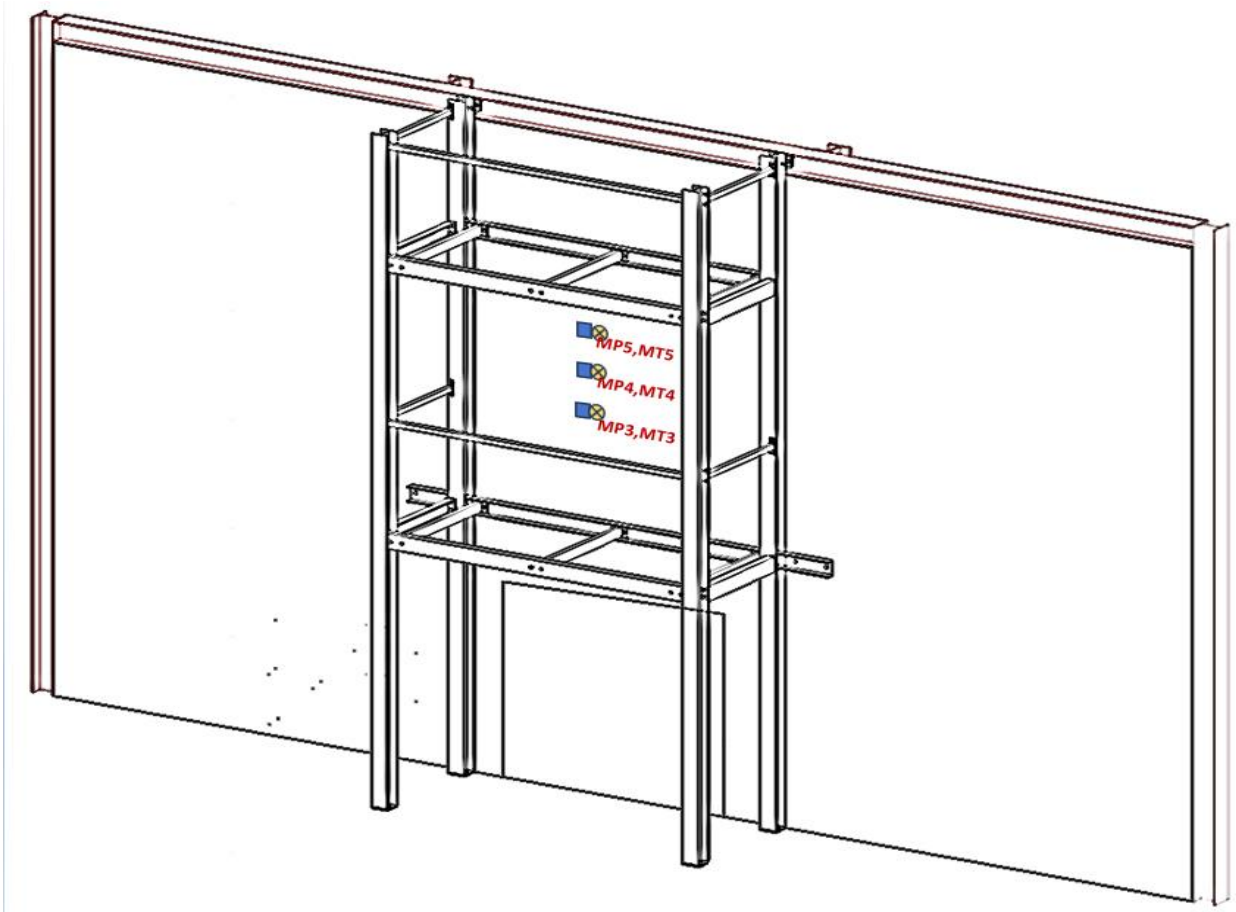

Temperature measured from the Plate TC's on wall at 1st floor

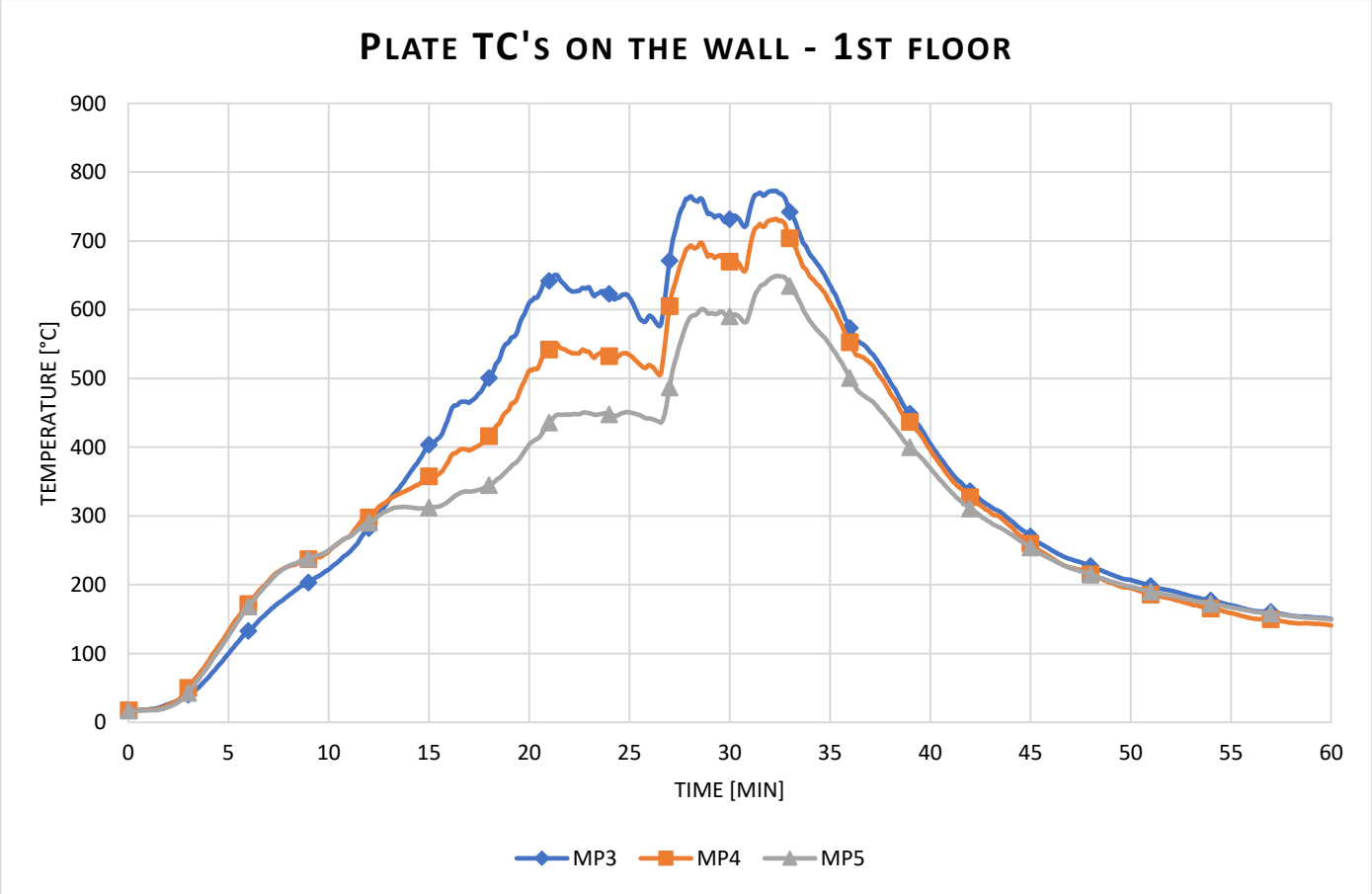

Temperature measured from the Inconels on wall at 1st floor

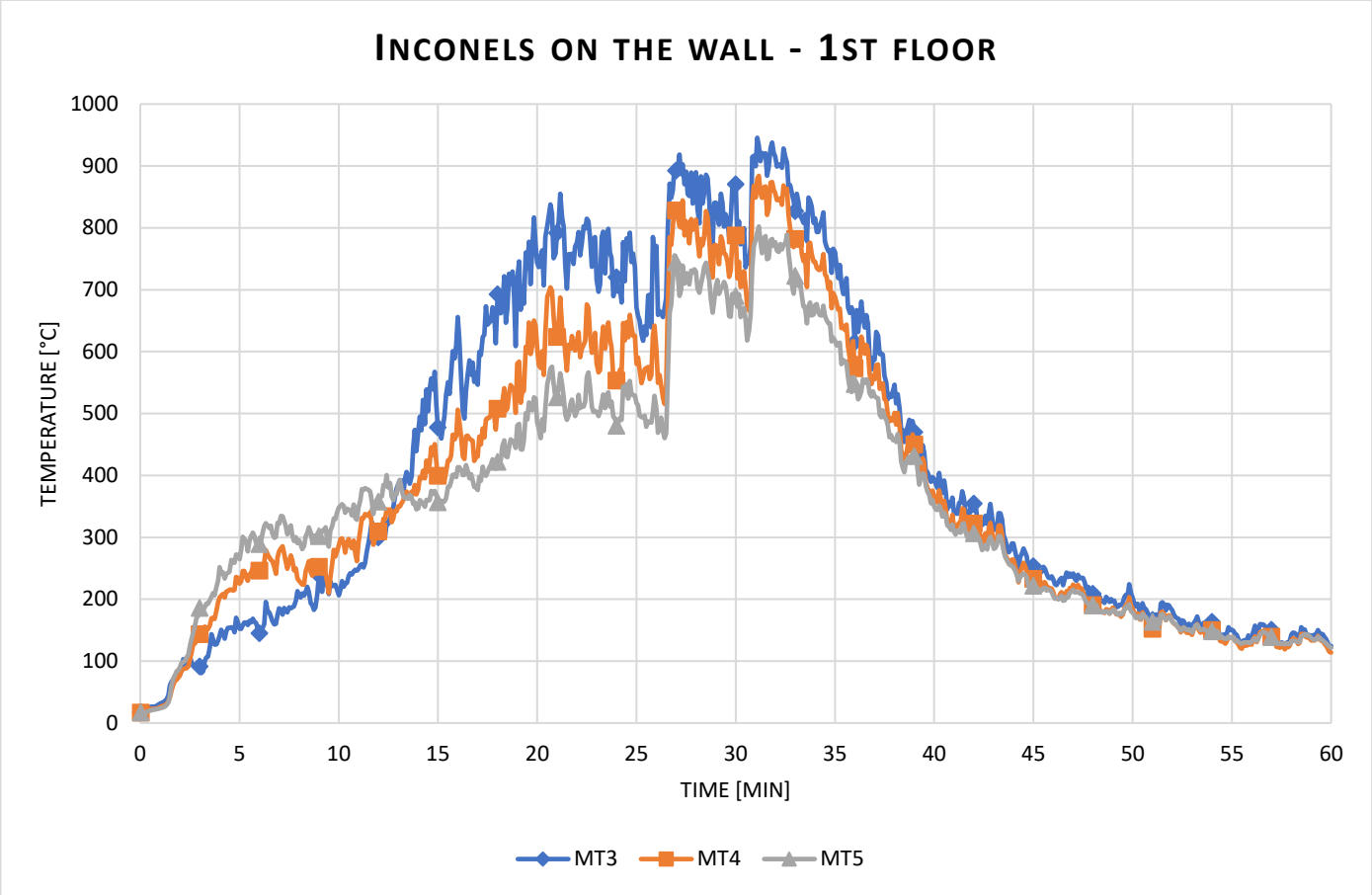

Radiant heat calculated from Plate TC

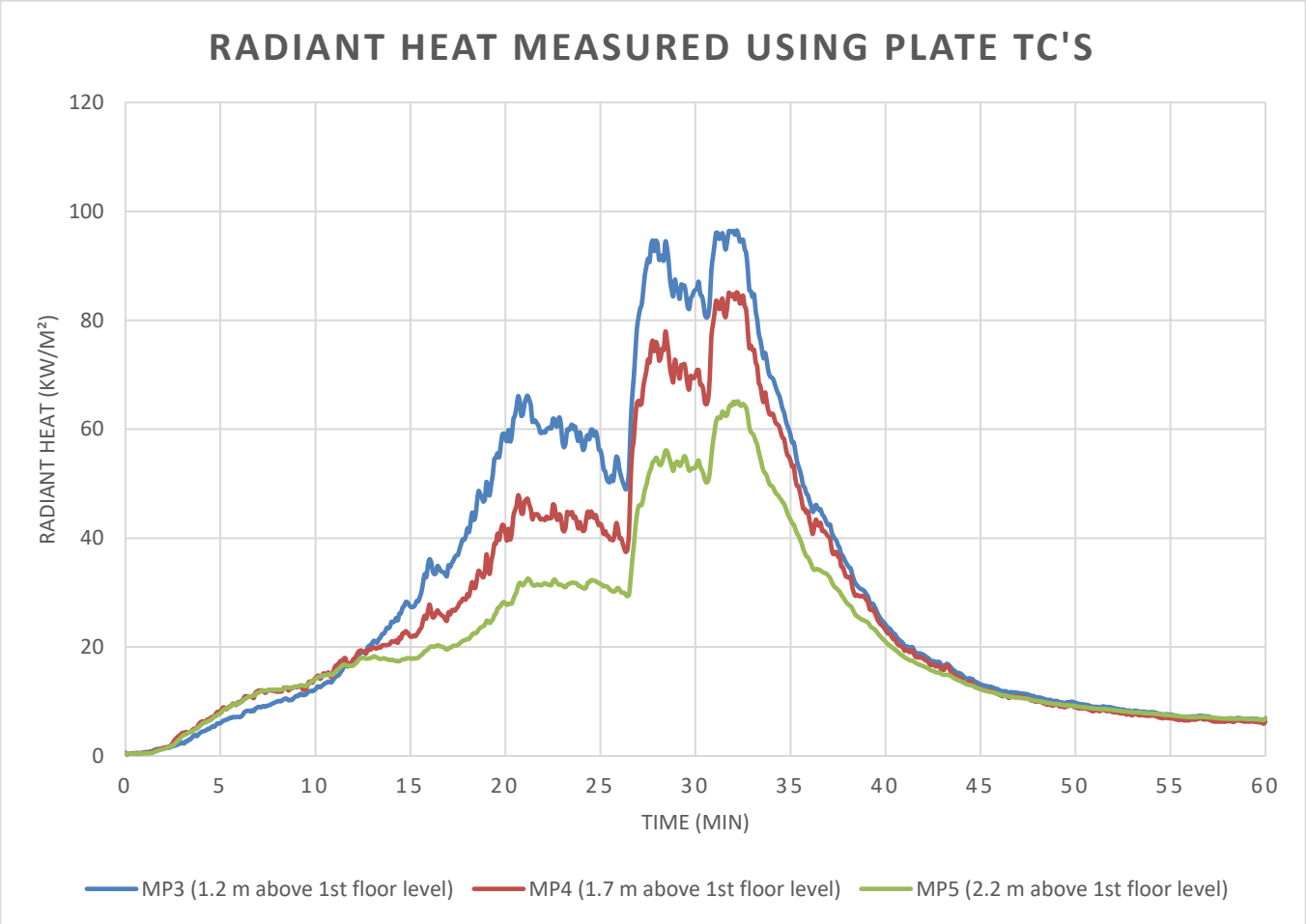

Data measurement from 2nd floor wall.

Layout

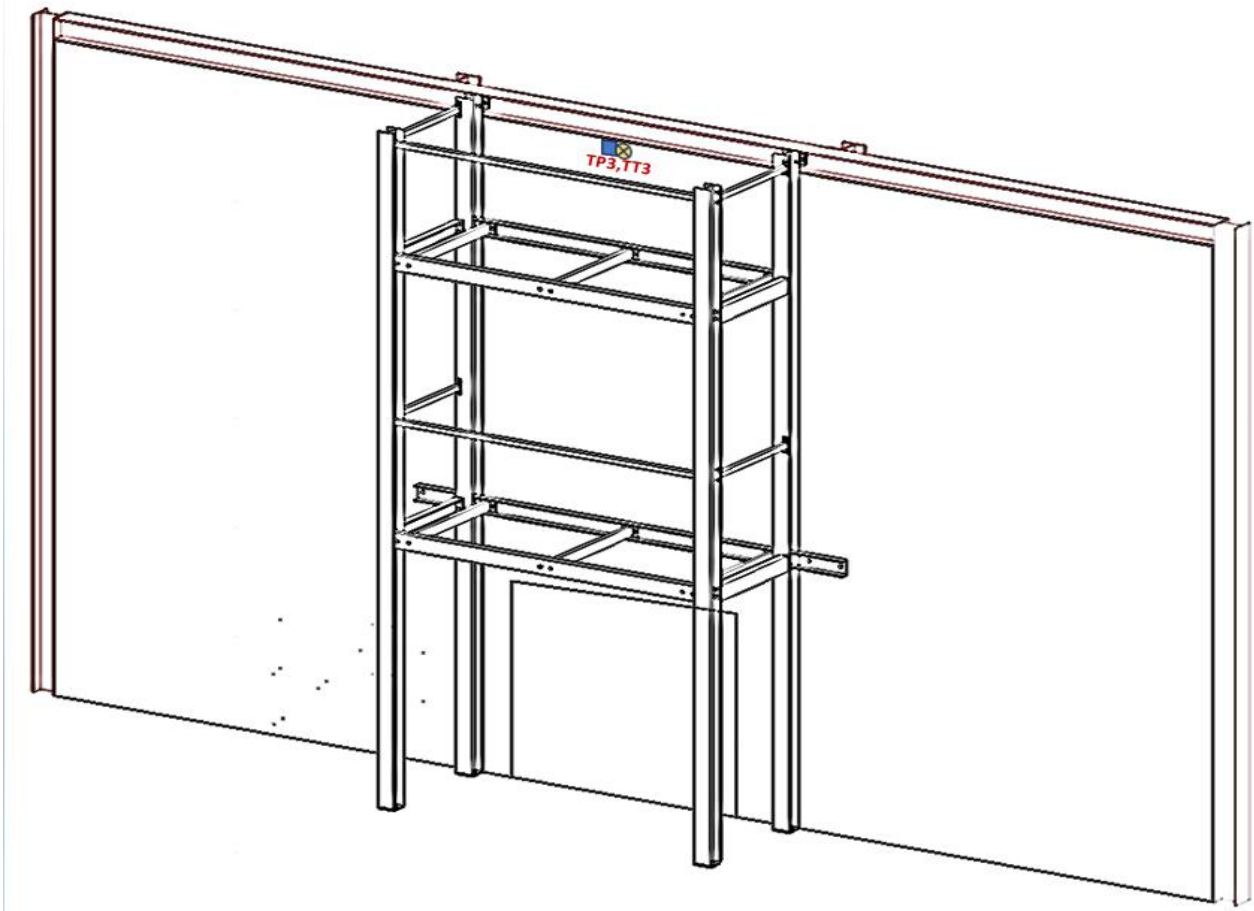

Temperature measured from Plate TC on the wall at 2nd floor

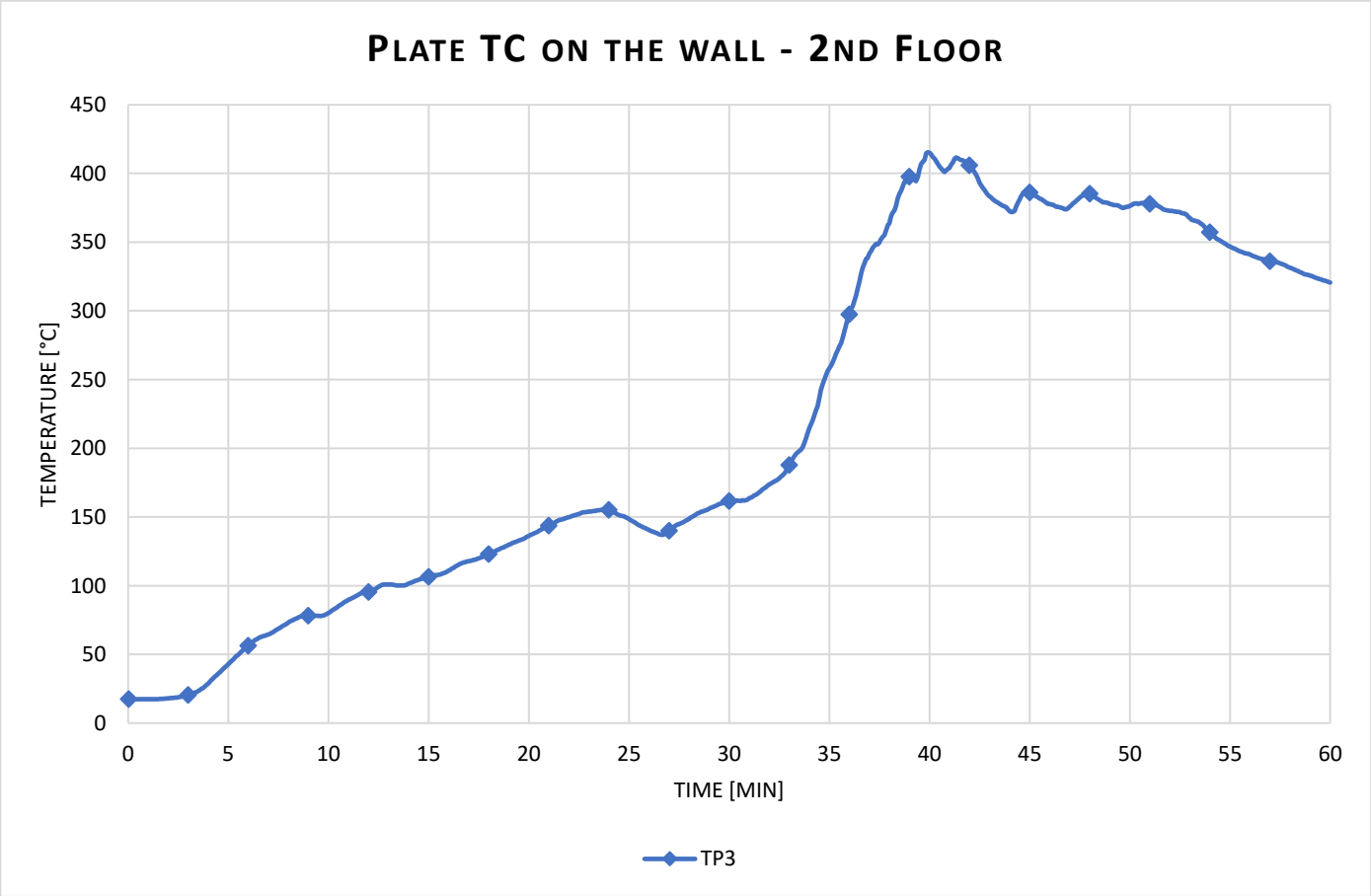

Temperature measured from Inconel on the wall at 2nd floor

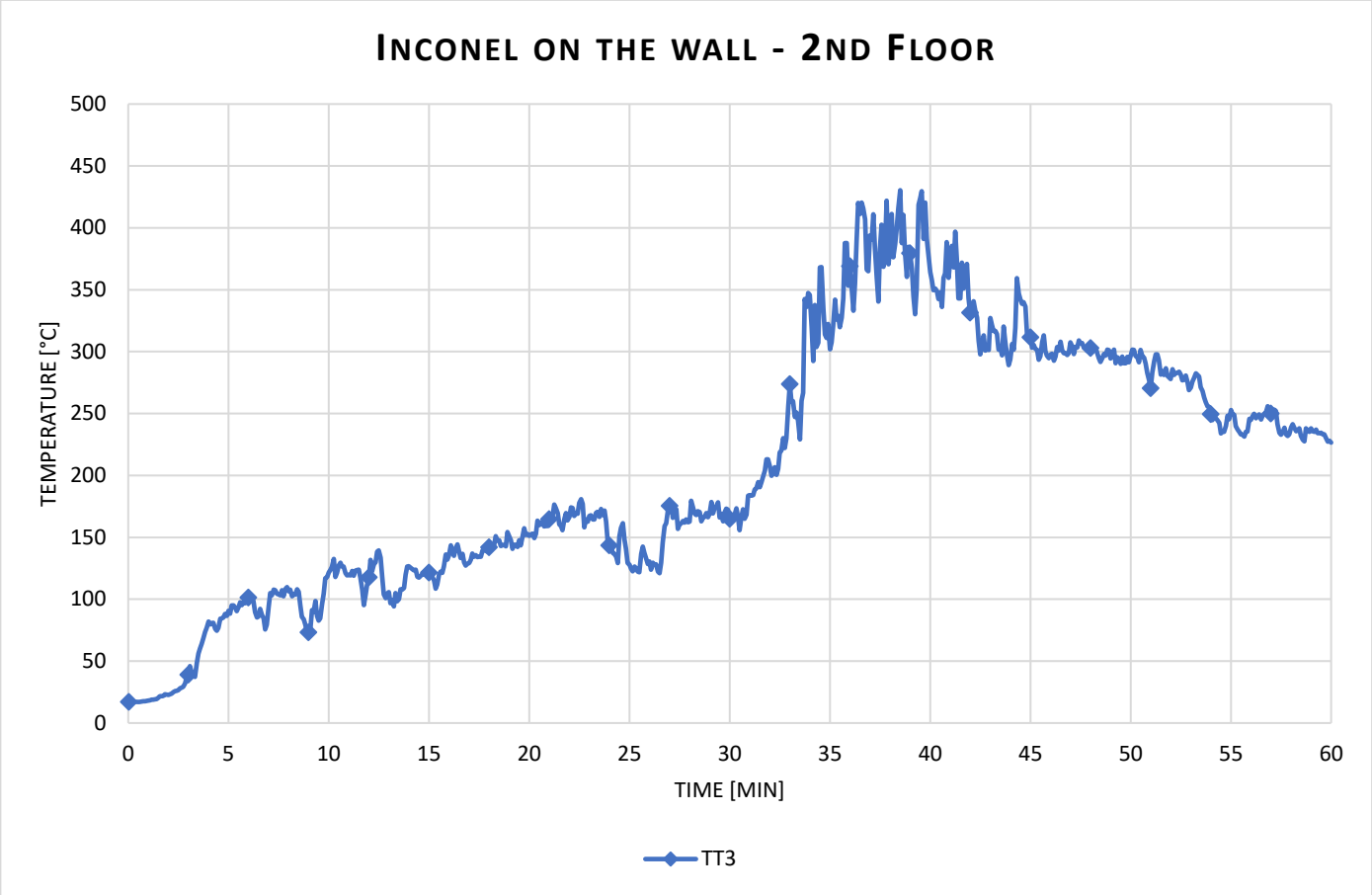

Radiant heat calculated from Plate TC

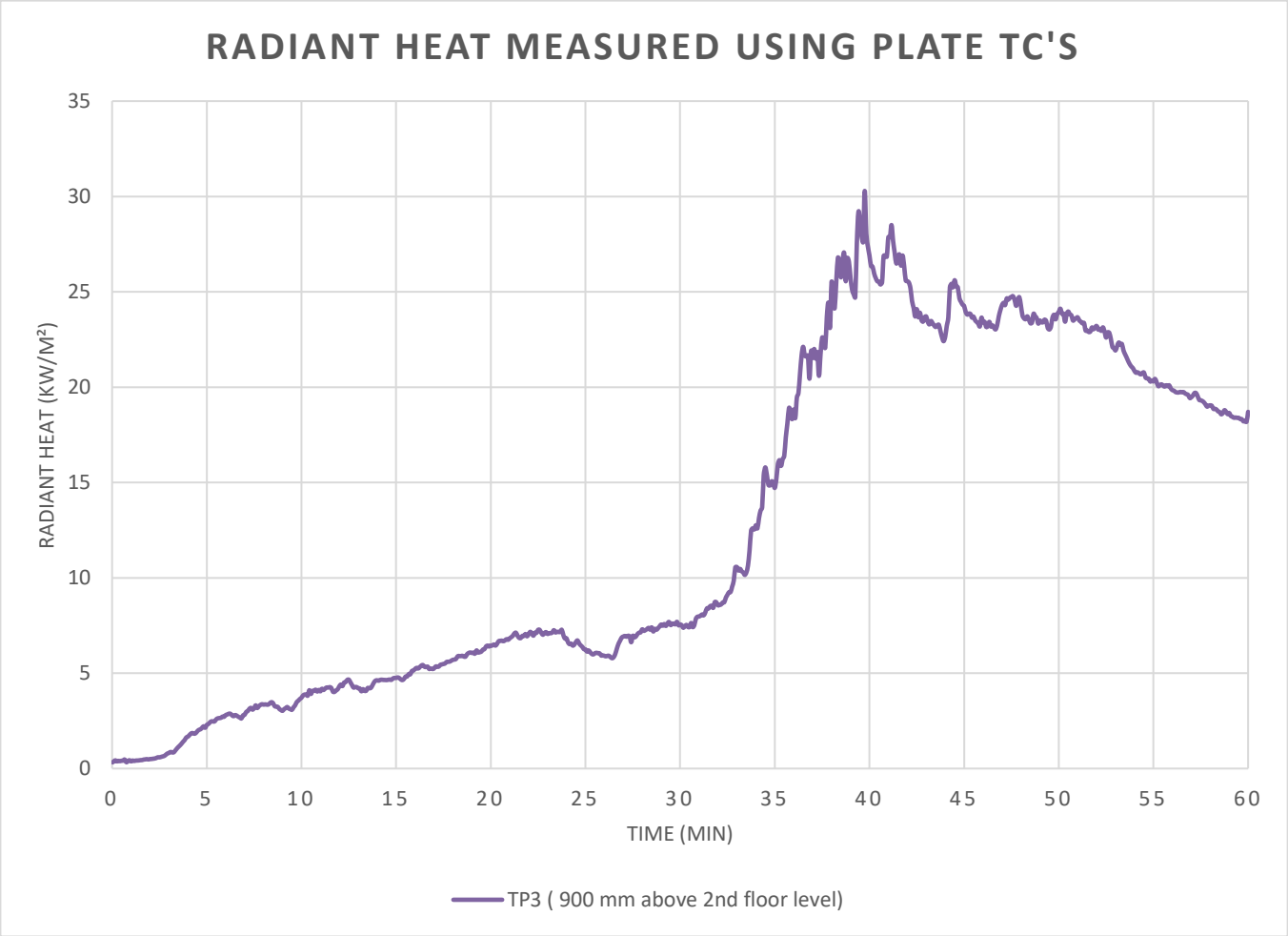

Data measurement from 1st floor exposed edge.

Layout

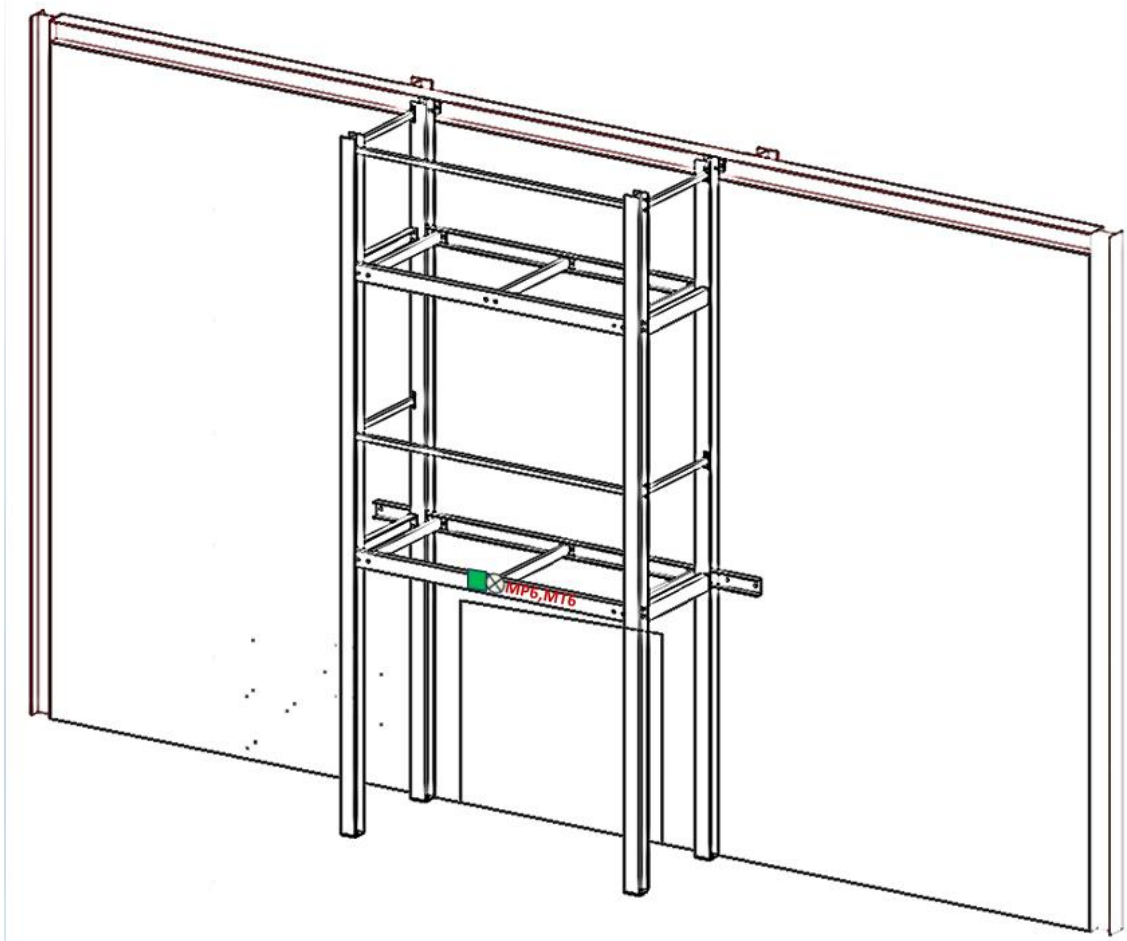

Temperature measured using plate TC 1st floor exposed edge

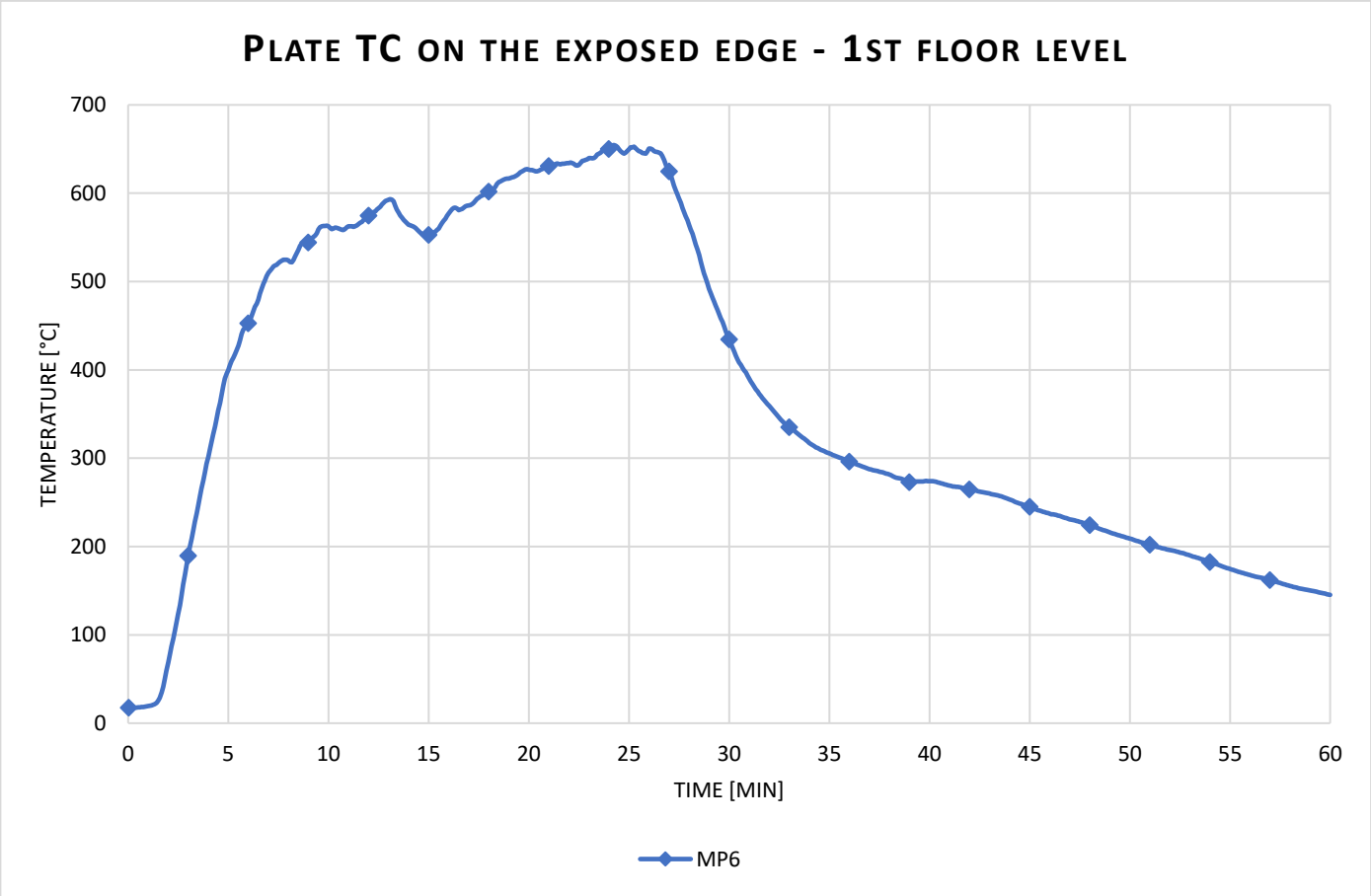

Temperature measured using plate Inconel 1st floor exposed edge

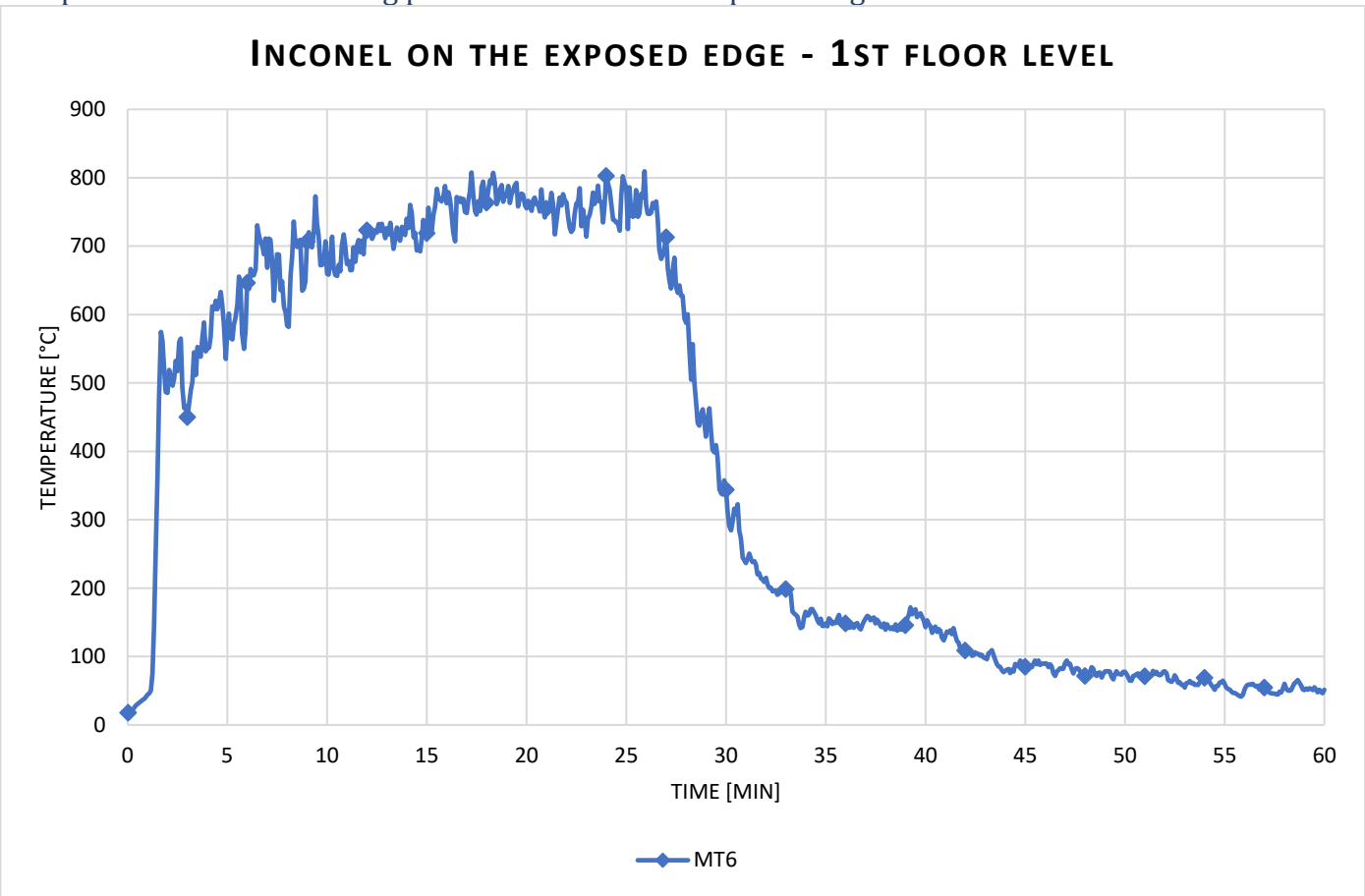

Radiant heat calculated from Plate TC

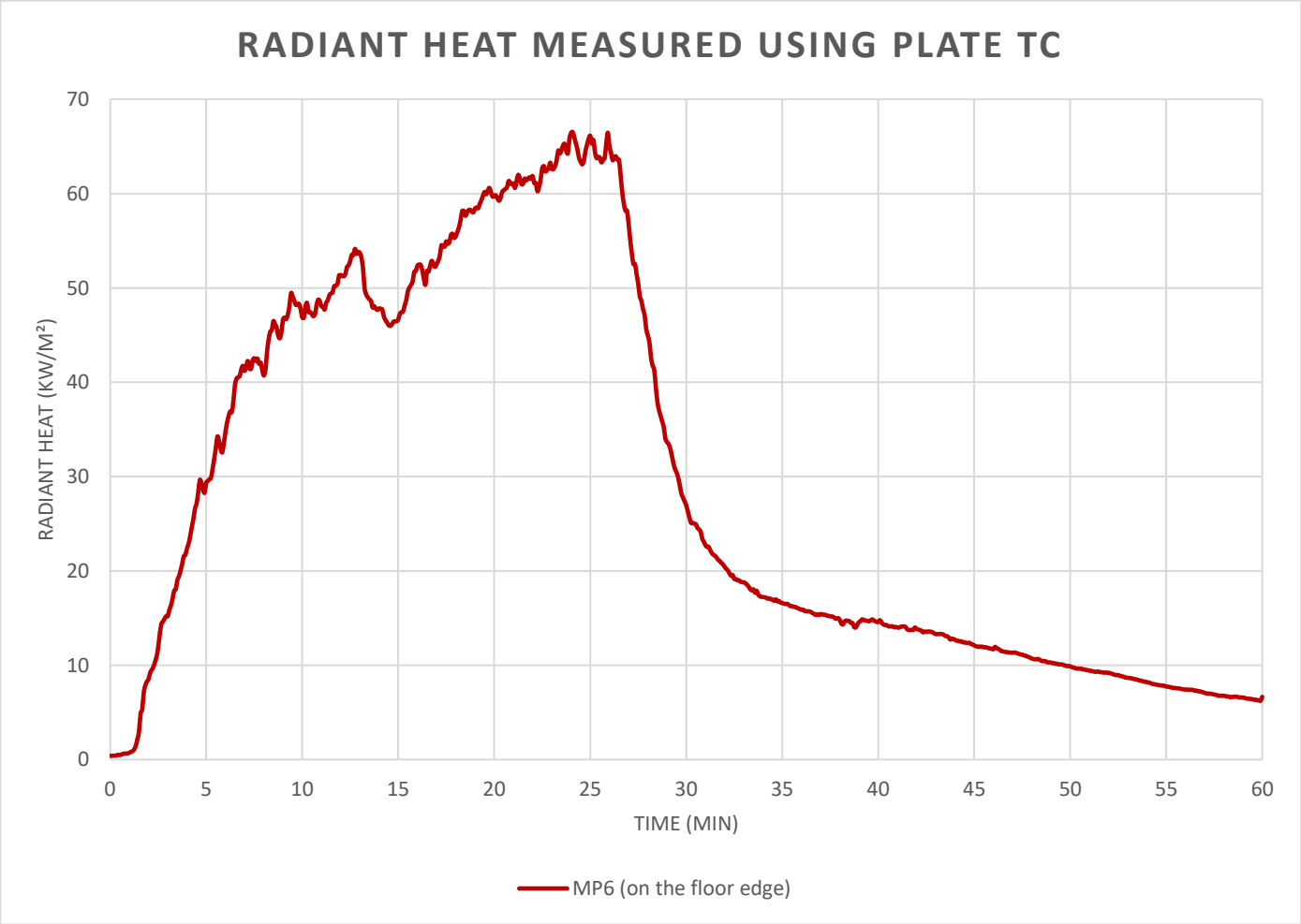

Data measurement from 1st floor exposed edge.

Layout

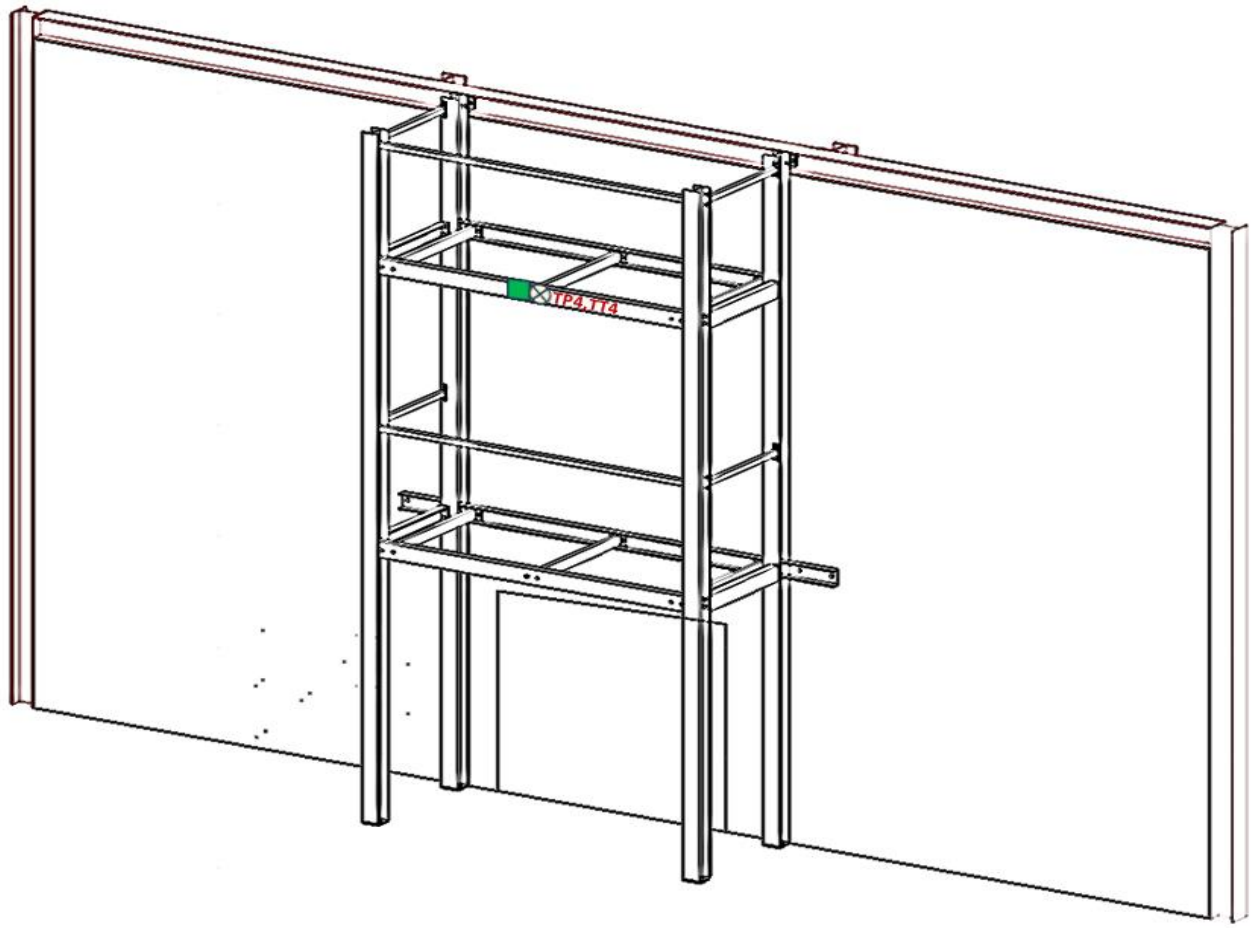

Temperature measured from the Plate TC on exposed edge at 2nd floor

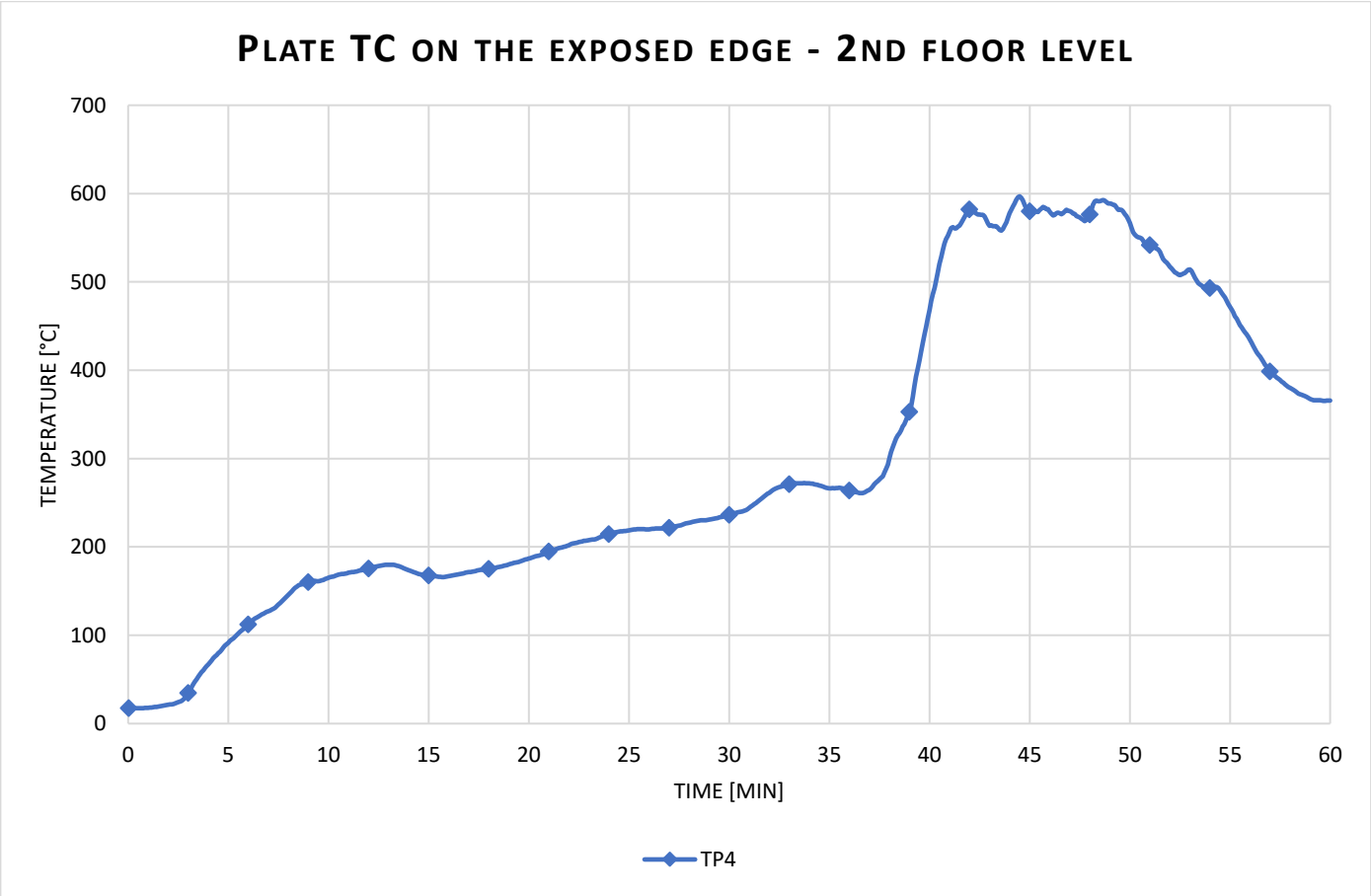

Temperature measured from the Inconel on exposed edge at 2nd floor

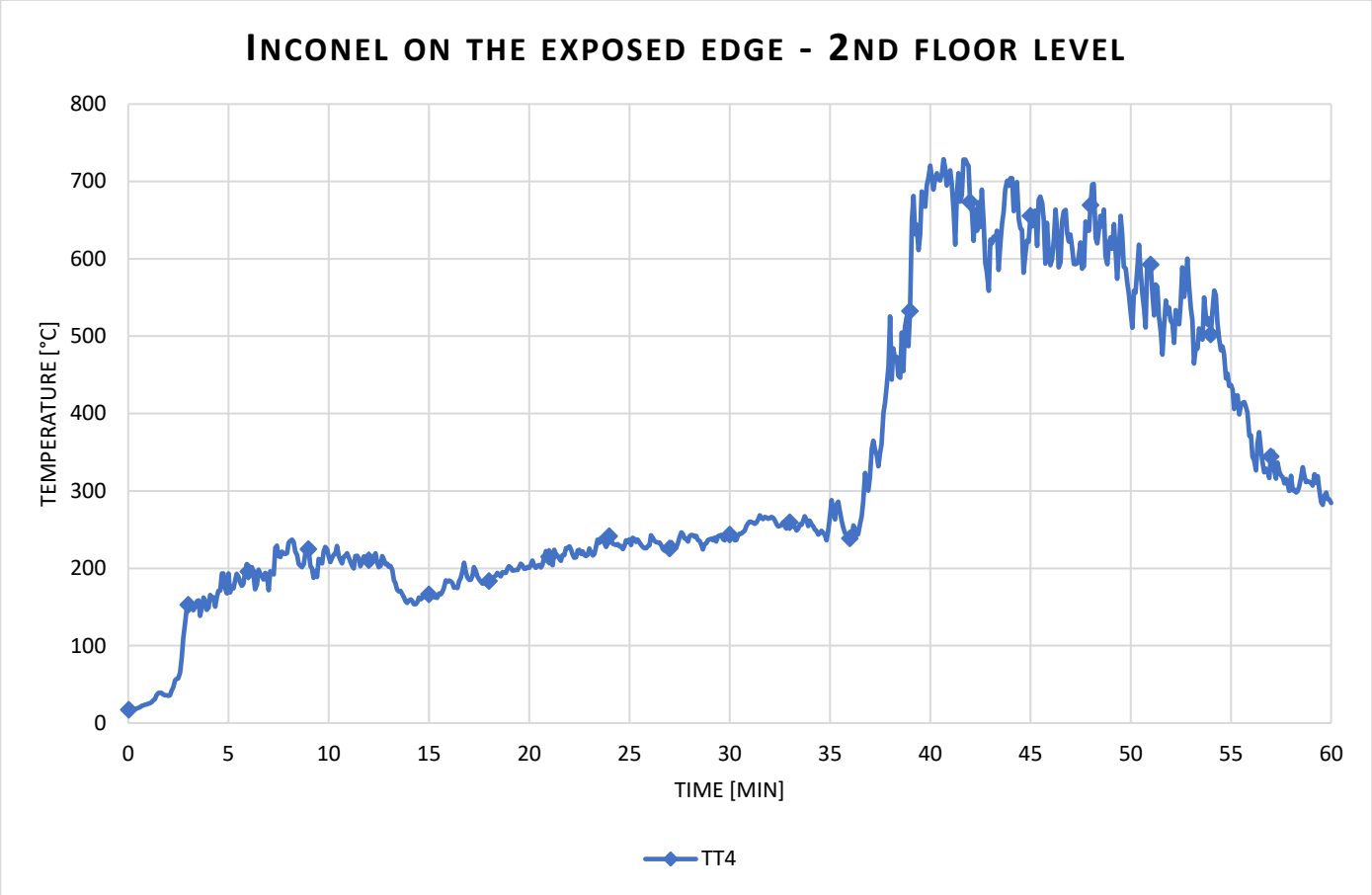

Radiant heat calculated from Plate TC

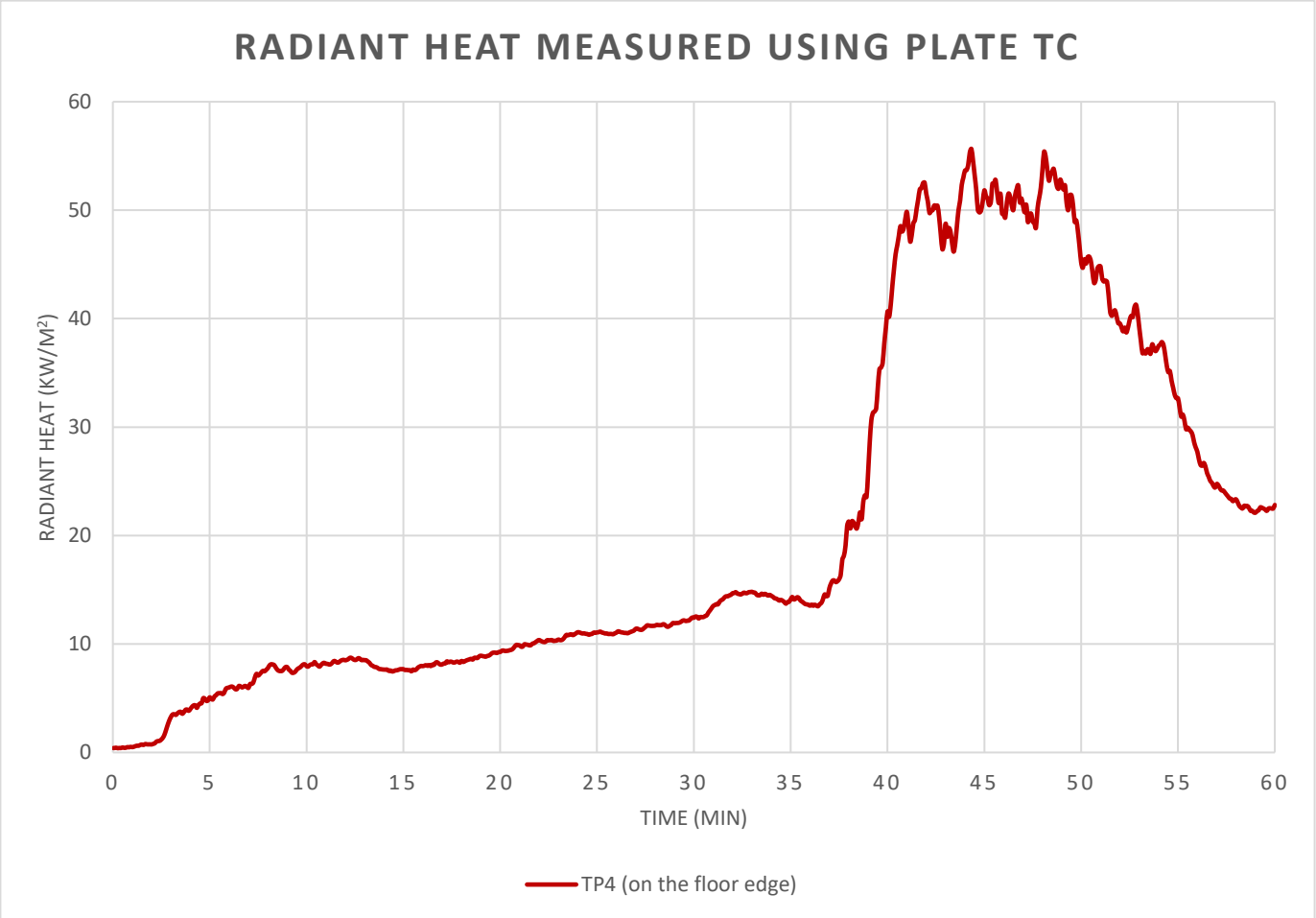

Data measurement from 1st floor handrails.

Layout

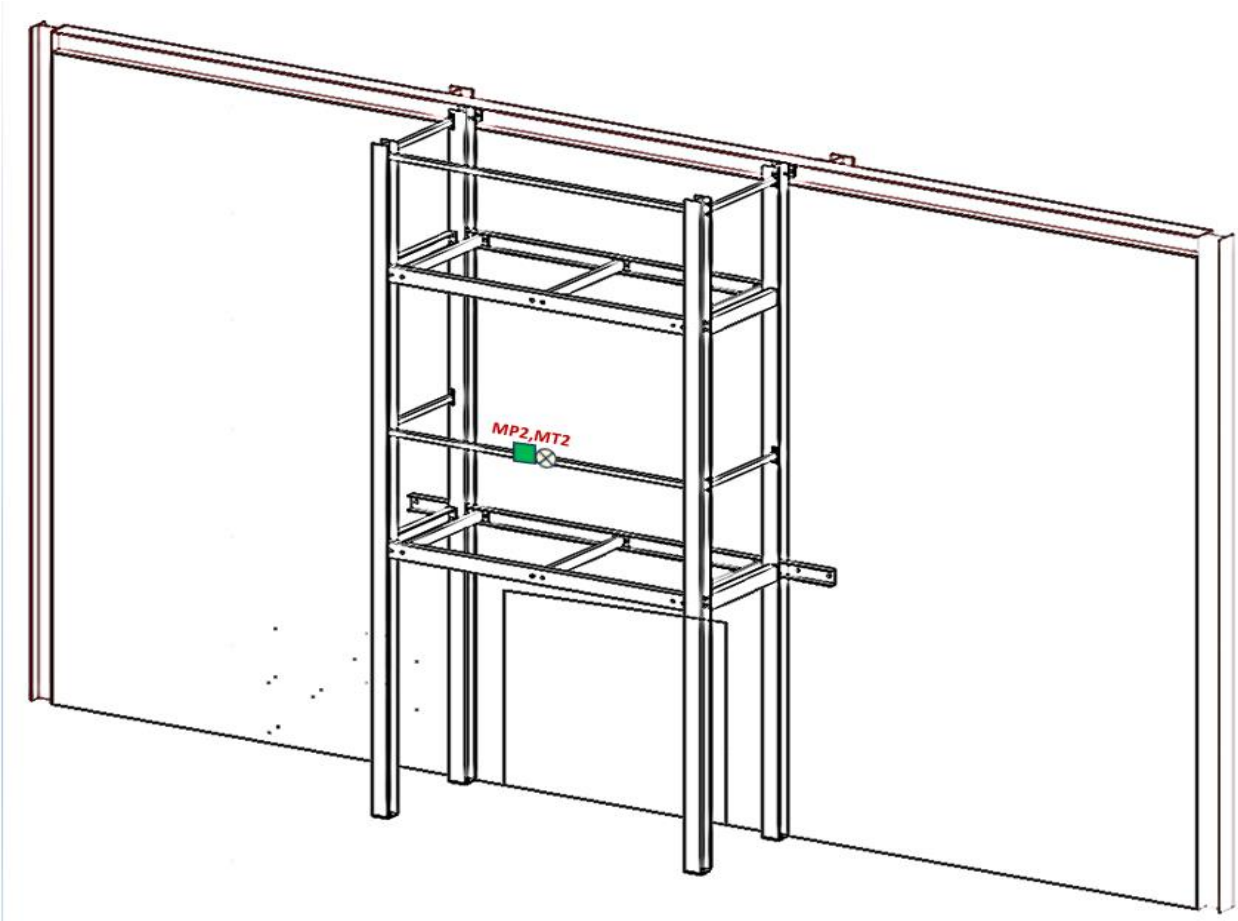

Temperature measured from the Plate TC on 1st floor handrails

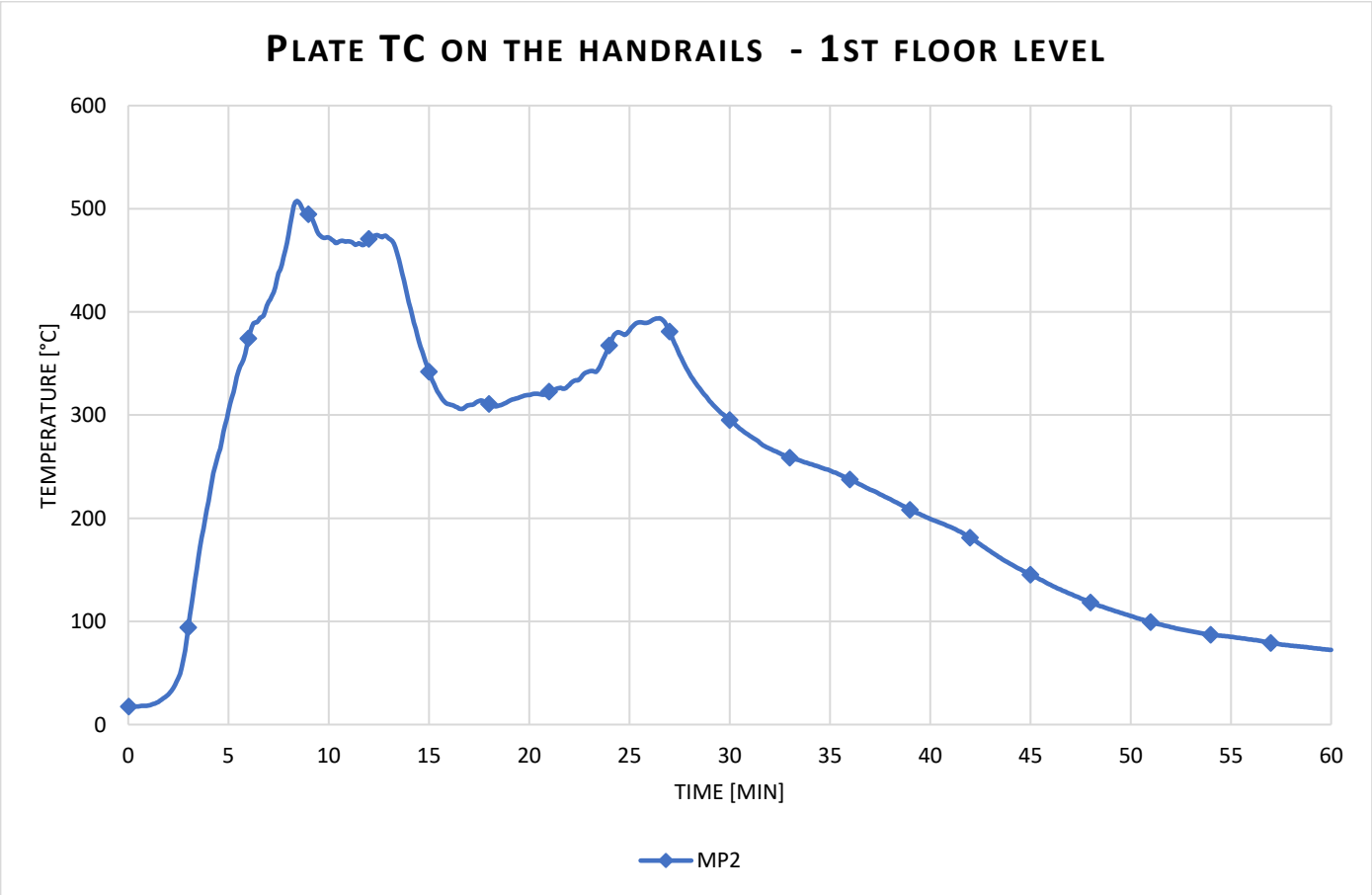

Temperature measured from the Inconel on 1st floor handrails

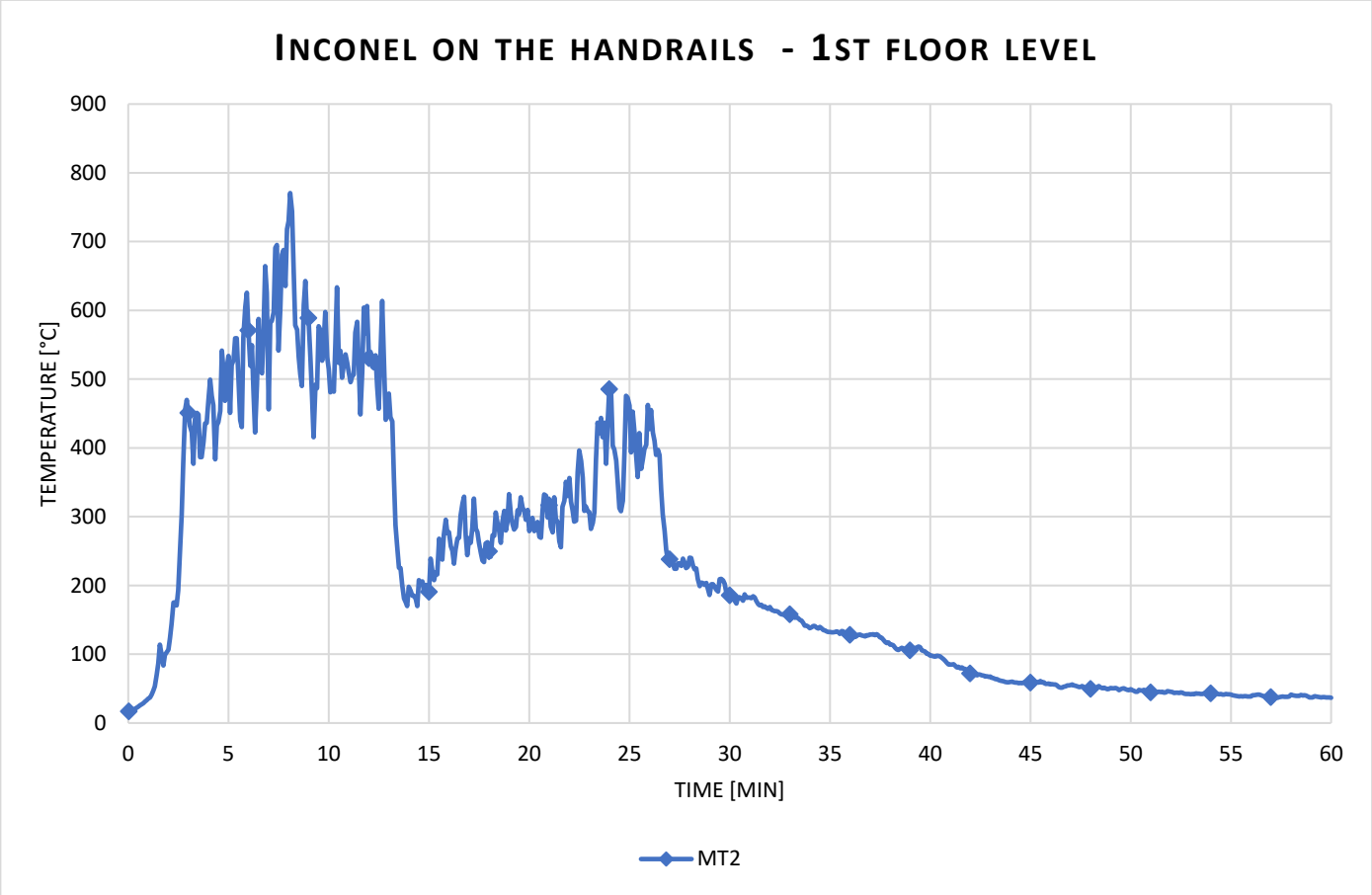

Radiant heat calculated from Plate TC

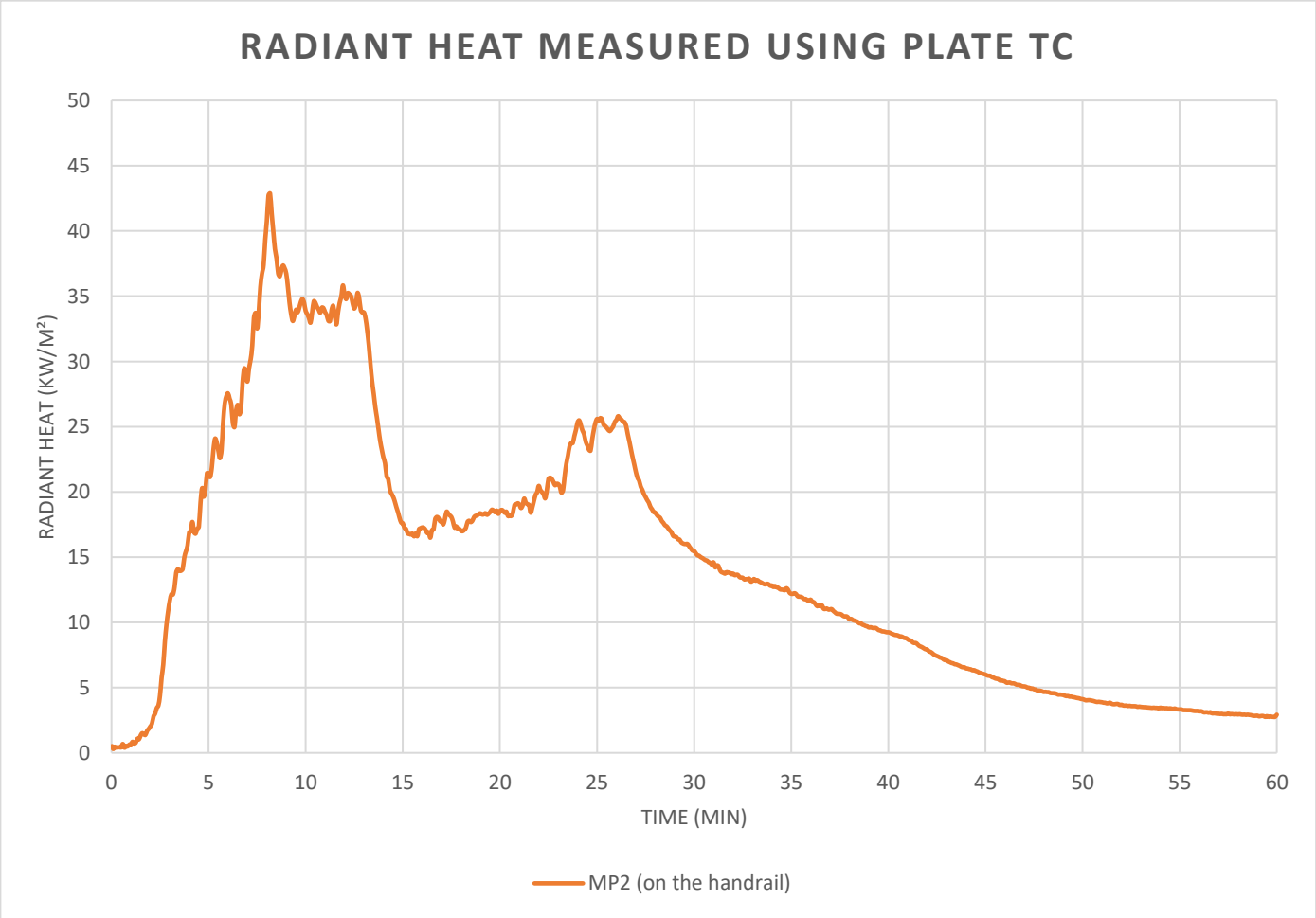

Data measurement from 2nd floor handrails.

Layout

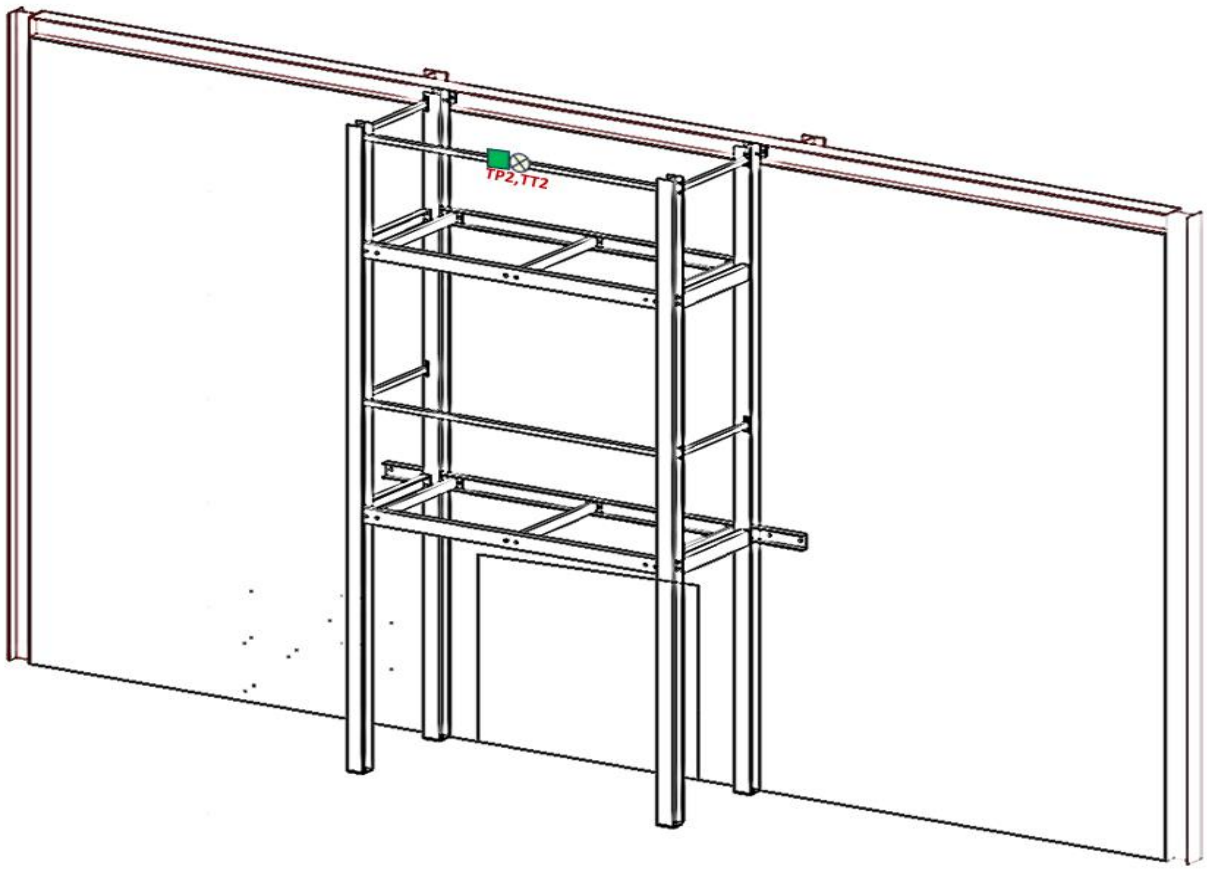

Temperature measured from the Plate TC on 2nd floor handrails.

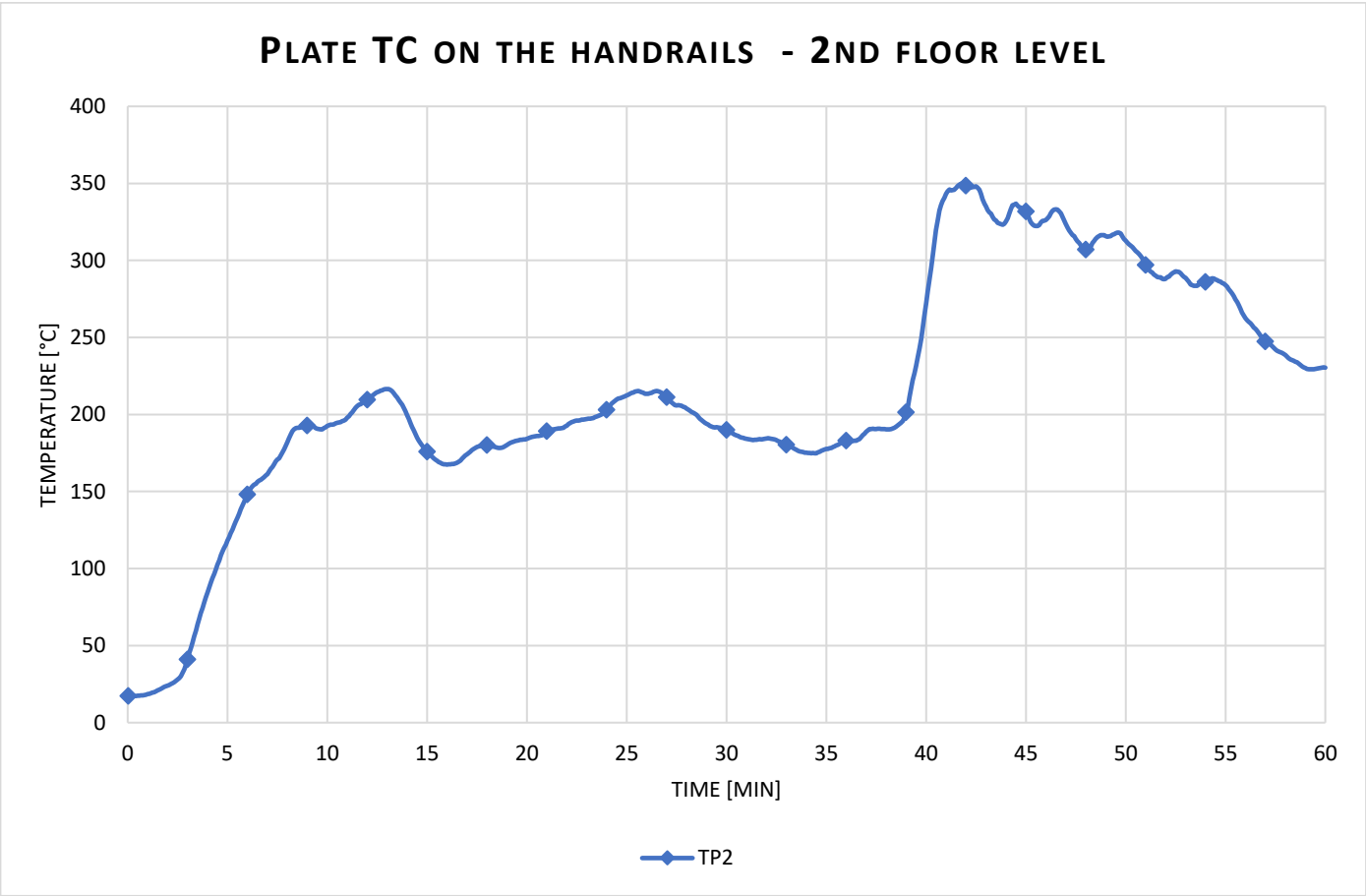

Temperature measured from the Inconel on 2nd floor handrails

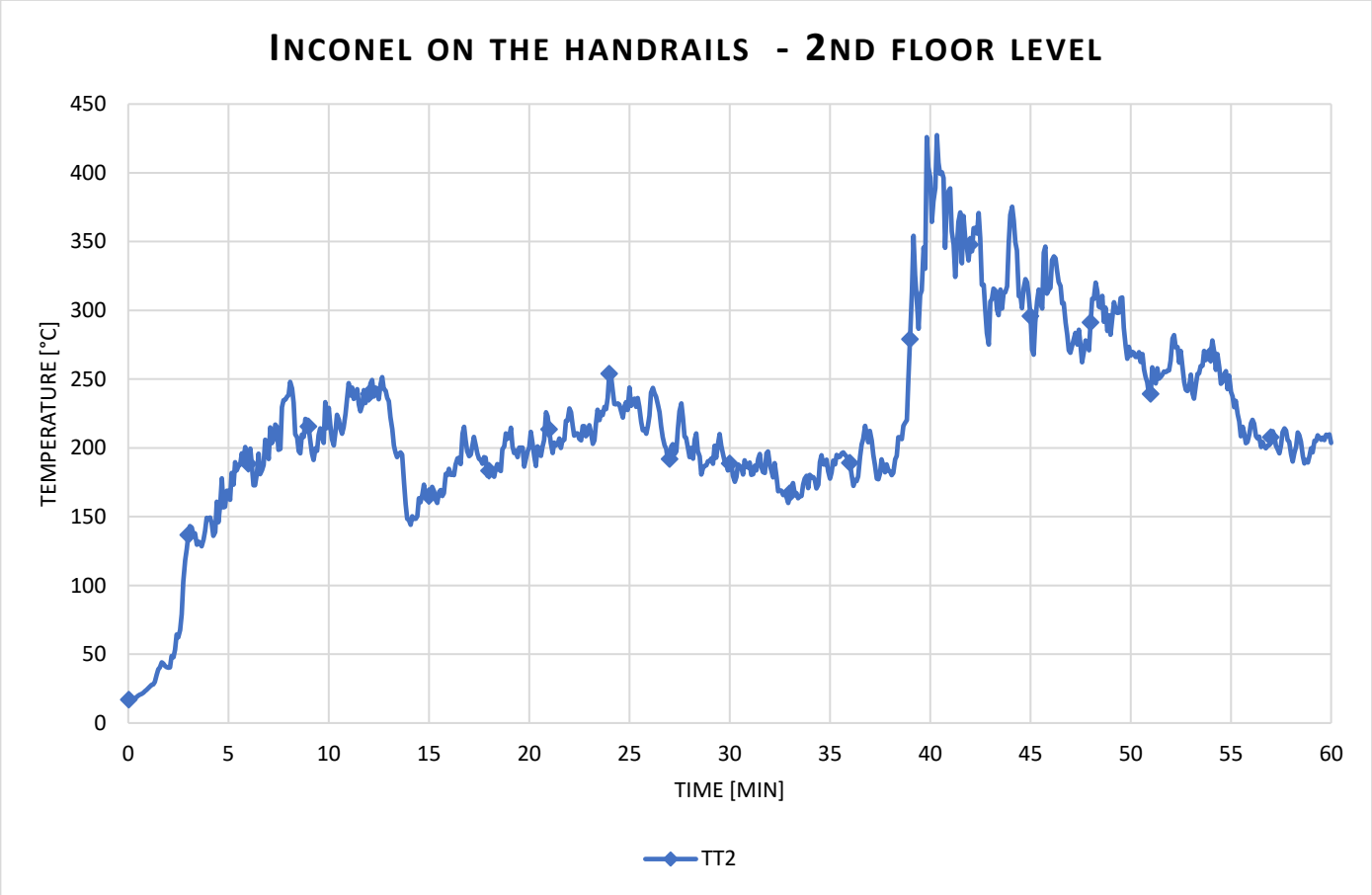

Radiant heat calculated from Plate TC

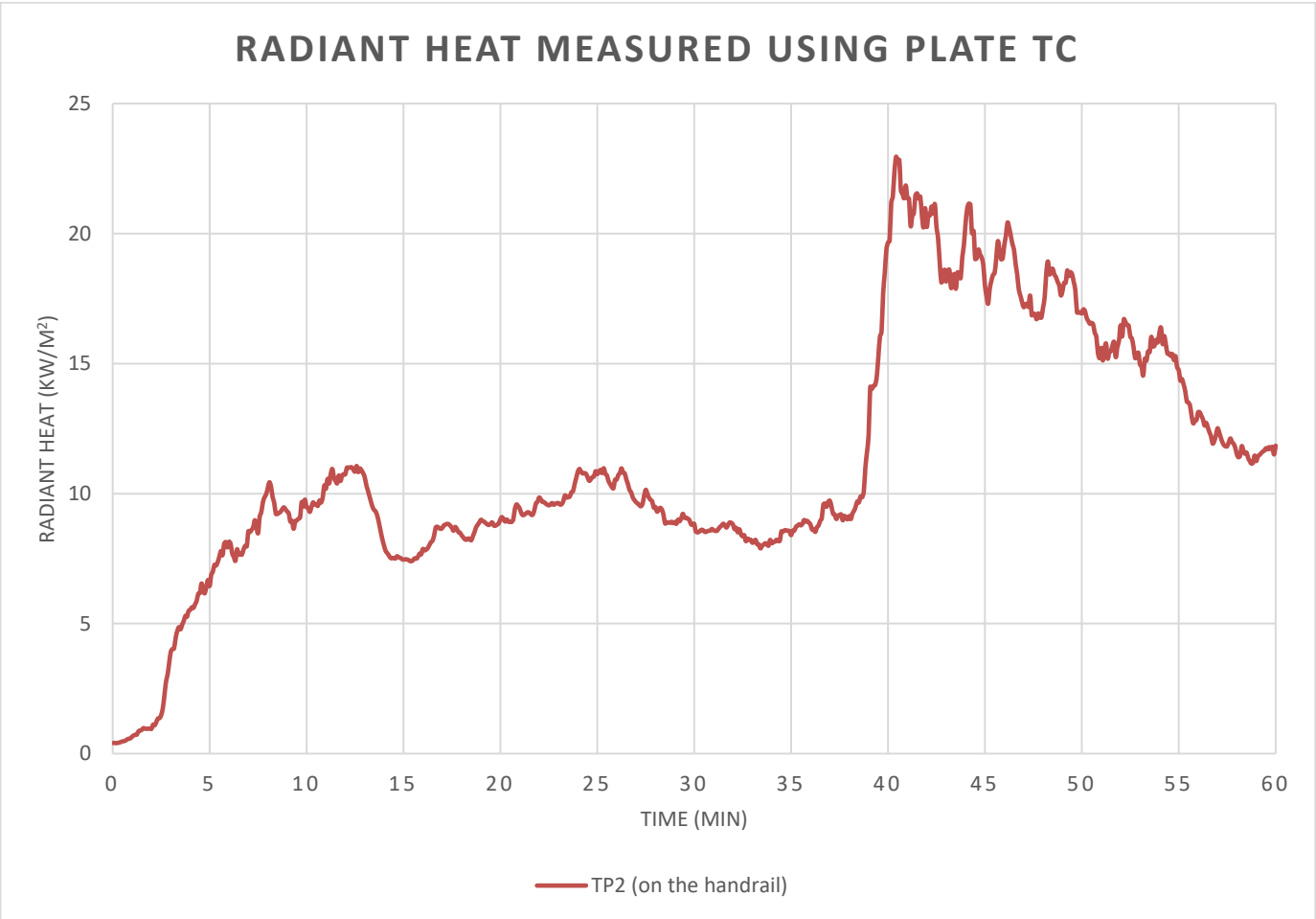

Data measurement from Ground floor sidewalls

Layout

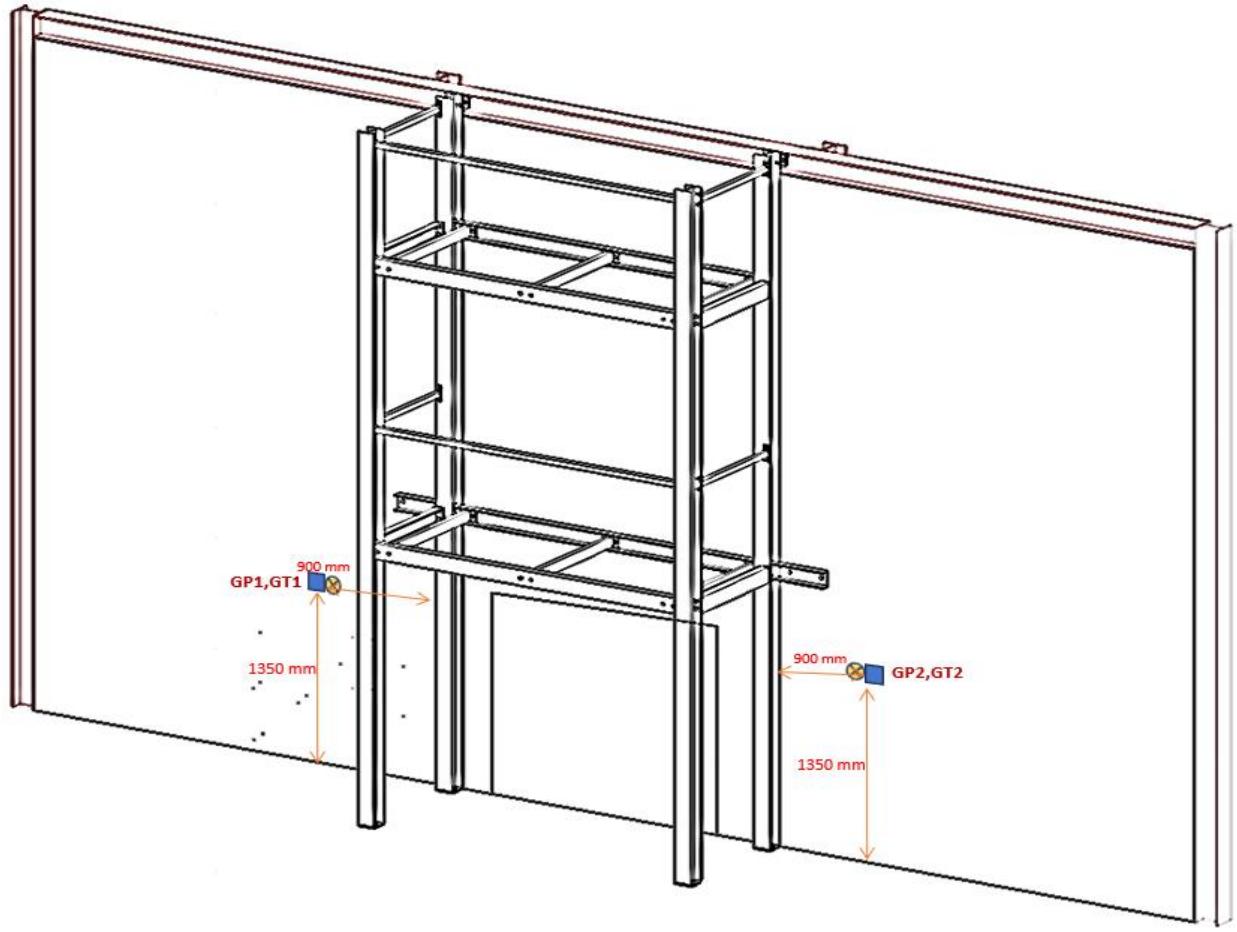

Temperature measured from the Plate TC's from Ground floor sidewalls

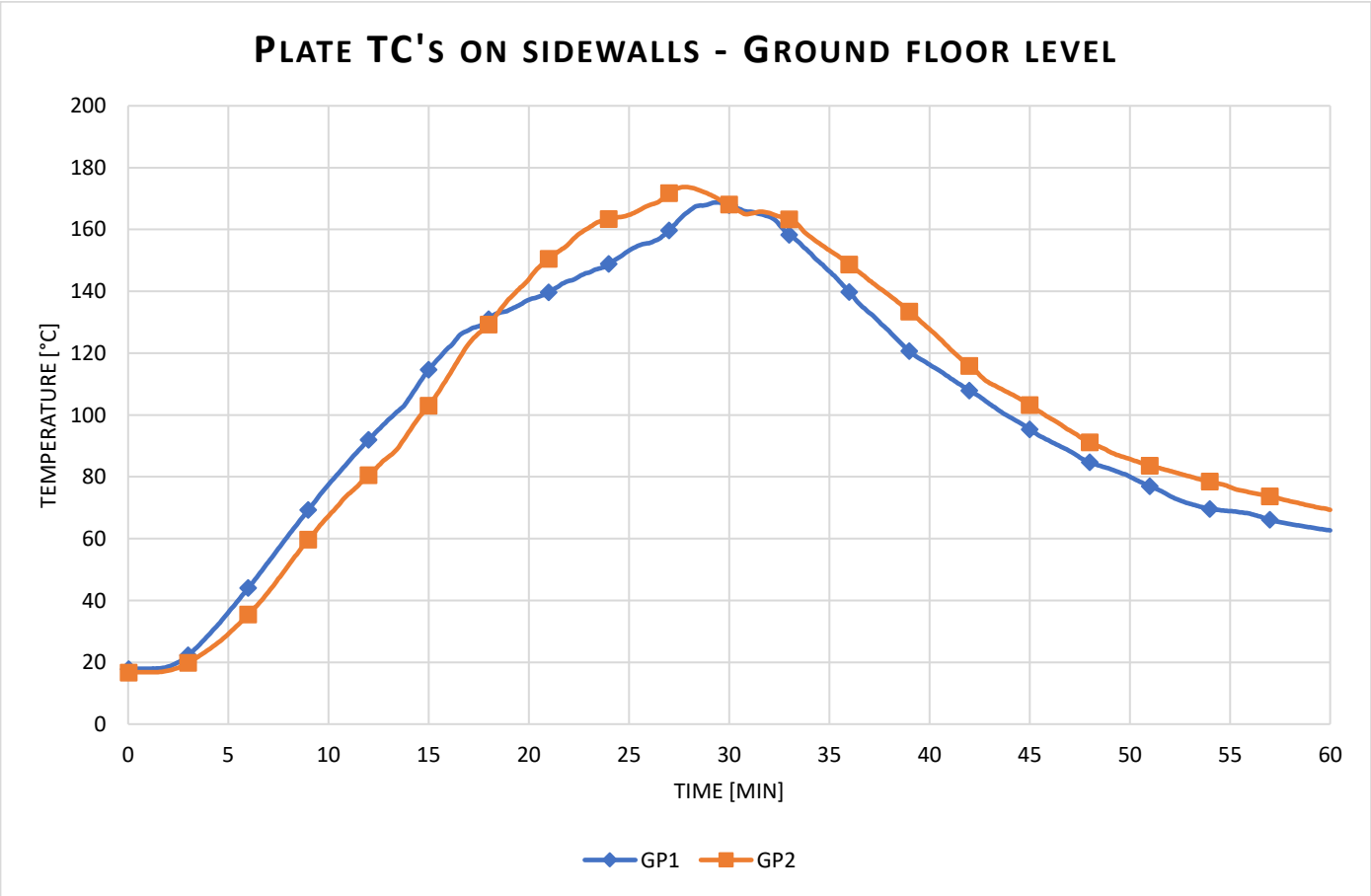

Temperature measured from the Inconel from 1st floor sidewall

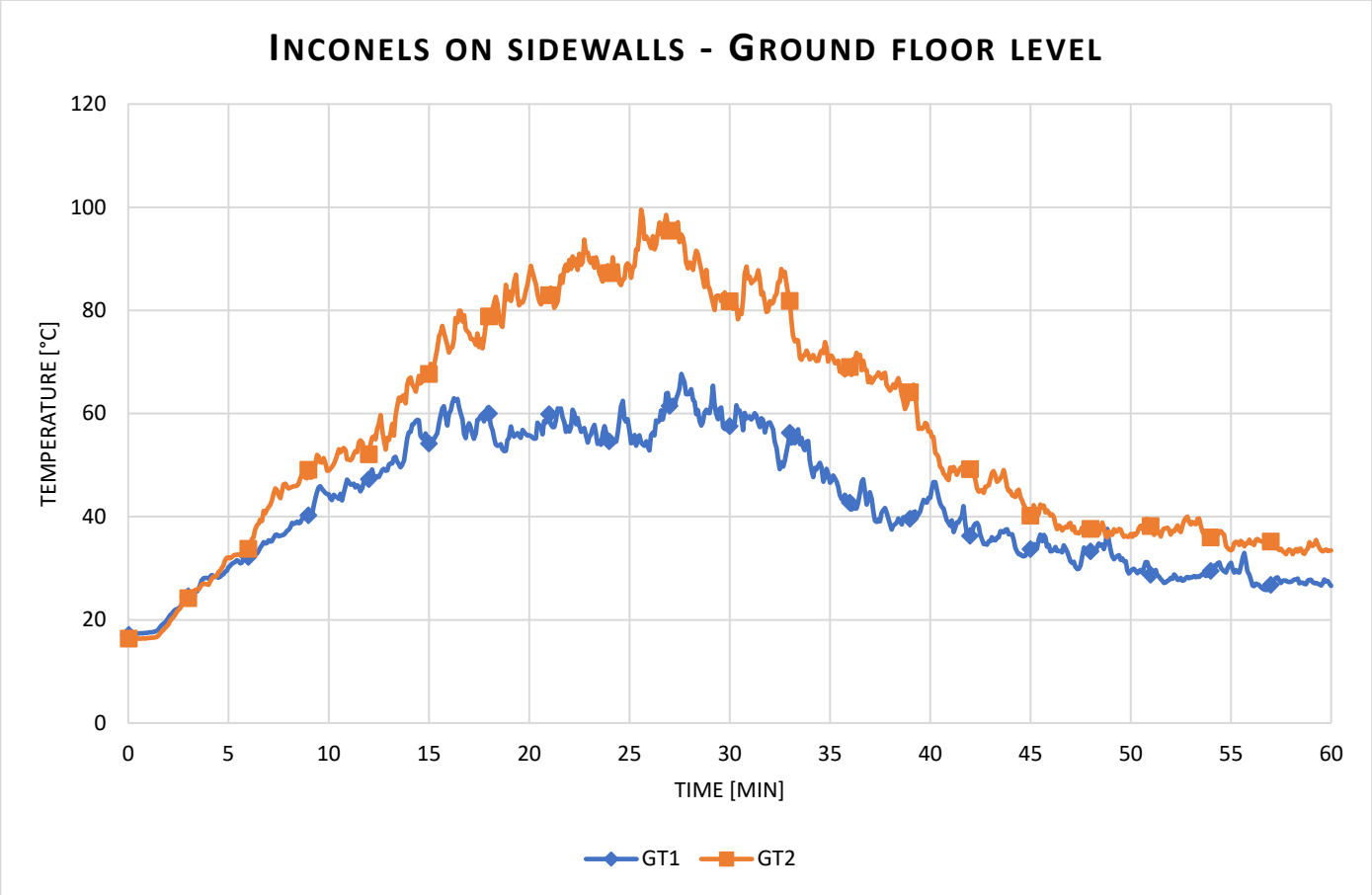

Radiant heat calculated from Plate TC's

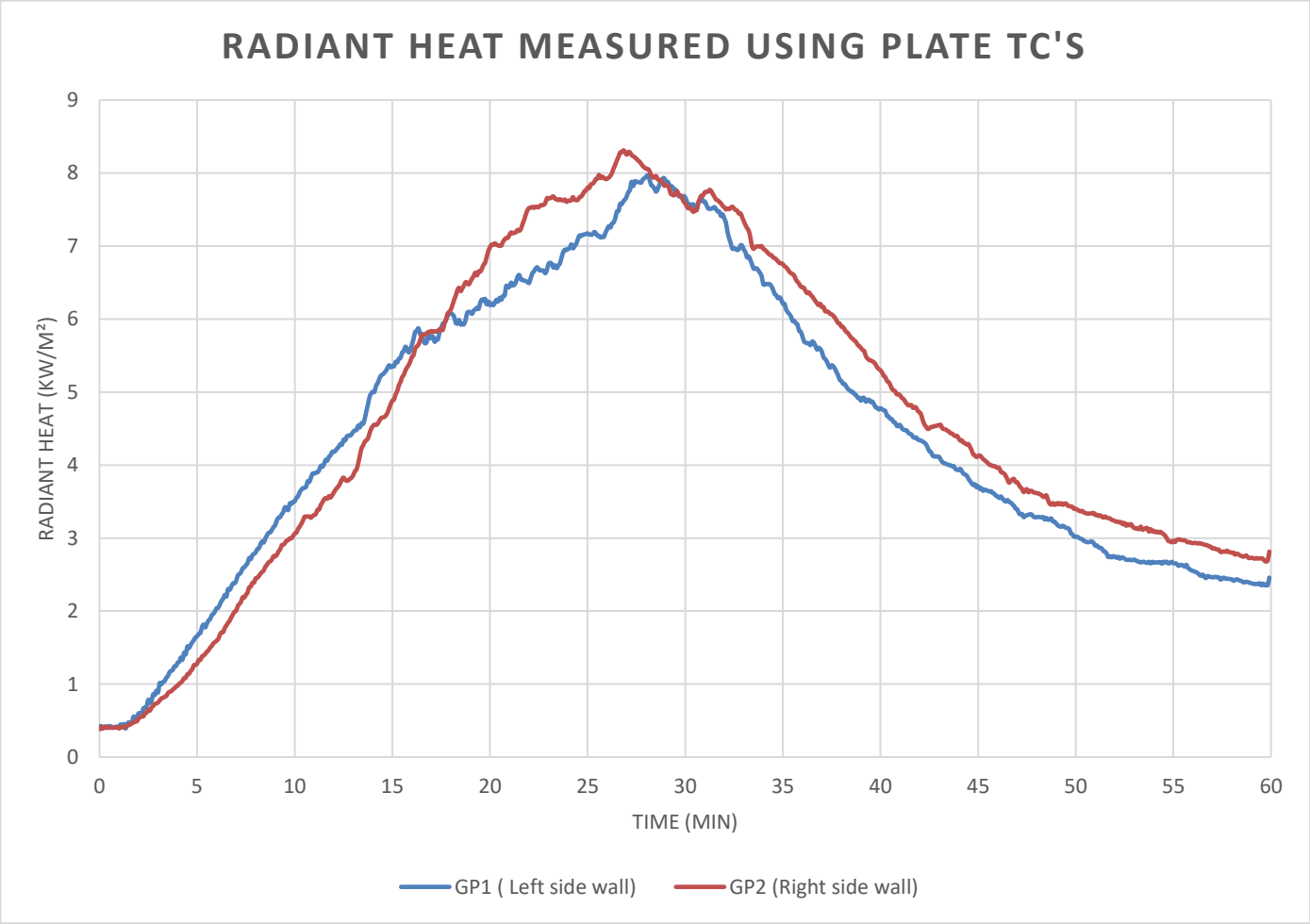

Data measurement from 1st floor sidewall

Layout

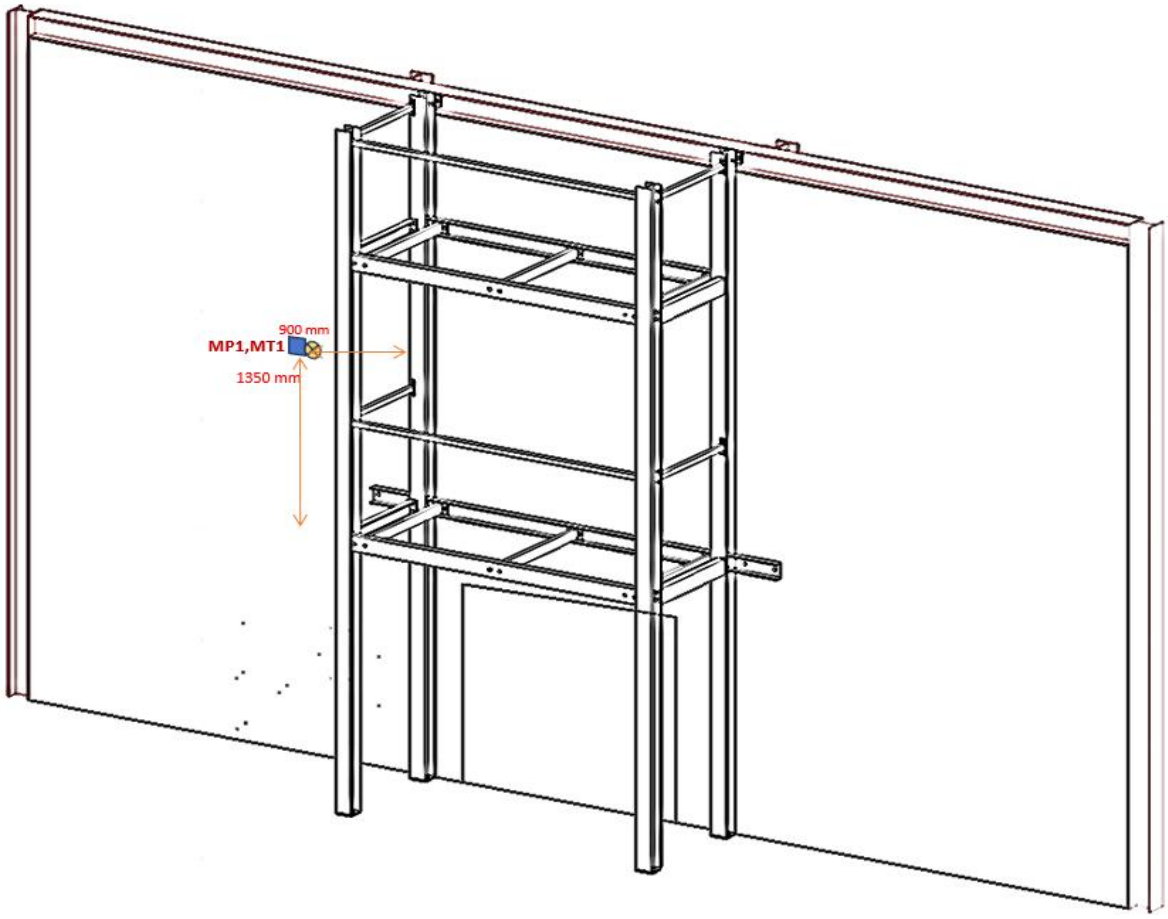

Temperature measured from the Plate TC from 1st floor sidewall

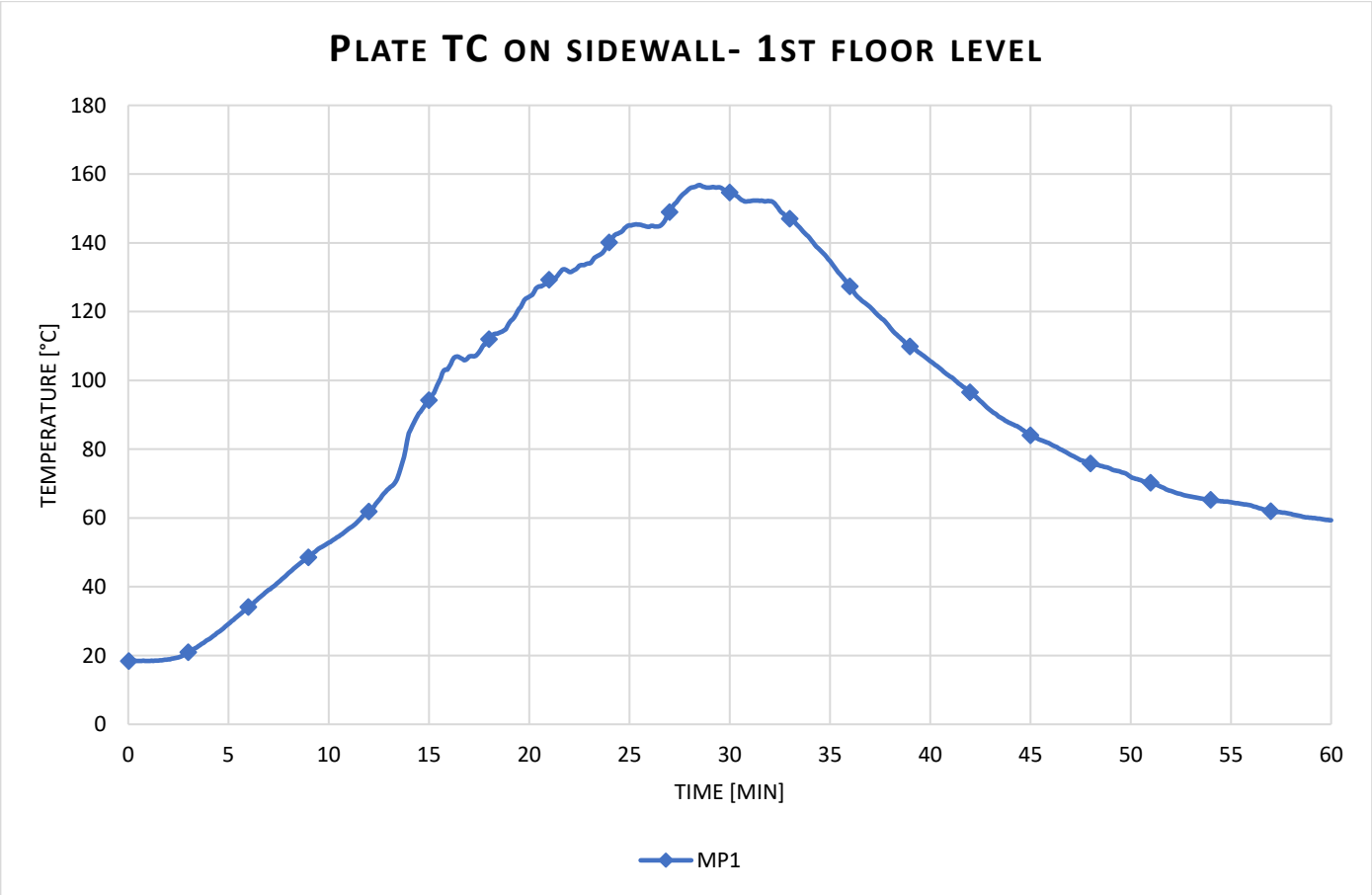

Temperature measured from the Inconel from 1st floor sidewall

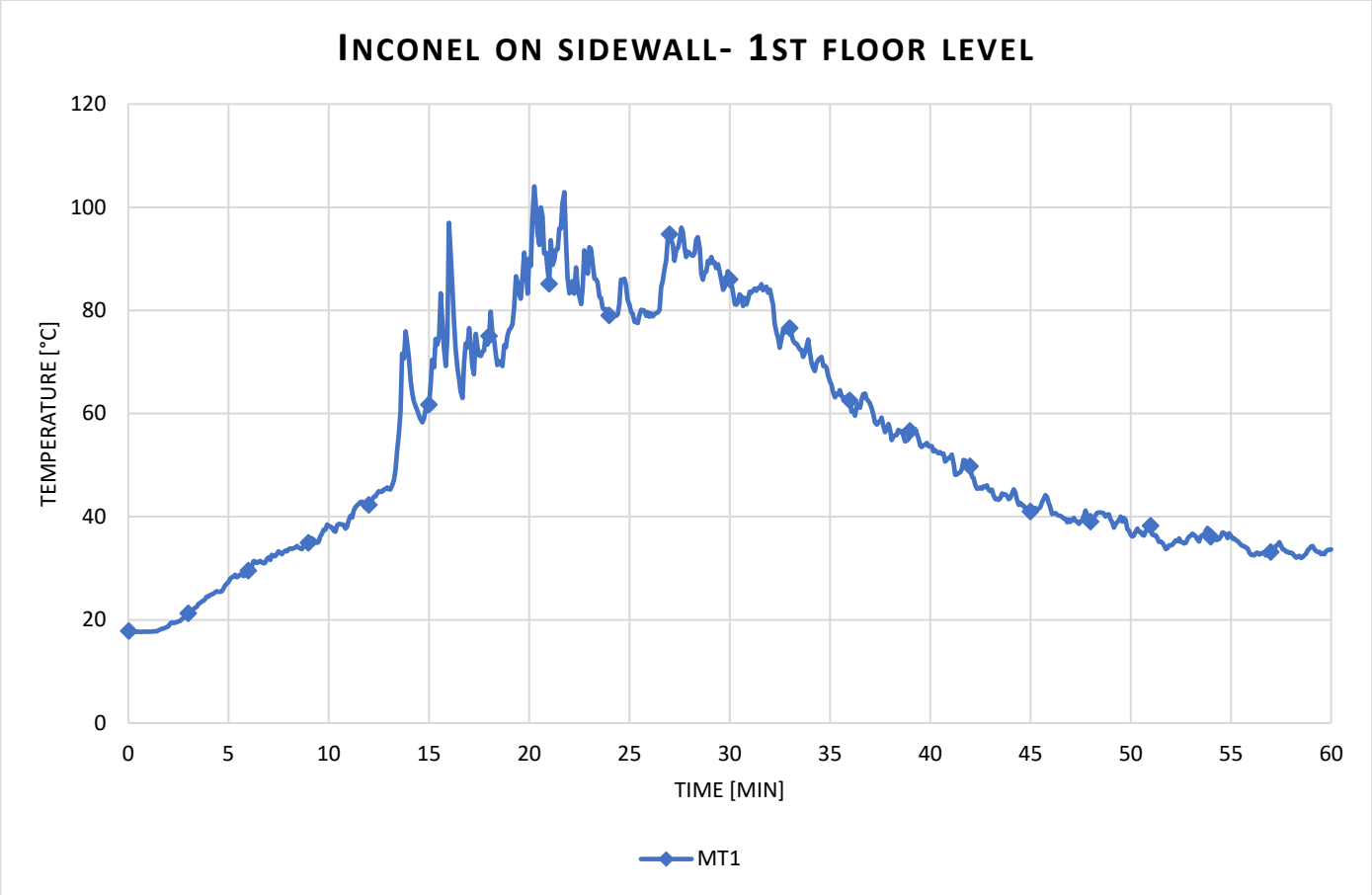

Radiant heat calculated from Plate TC

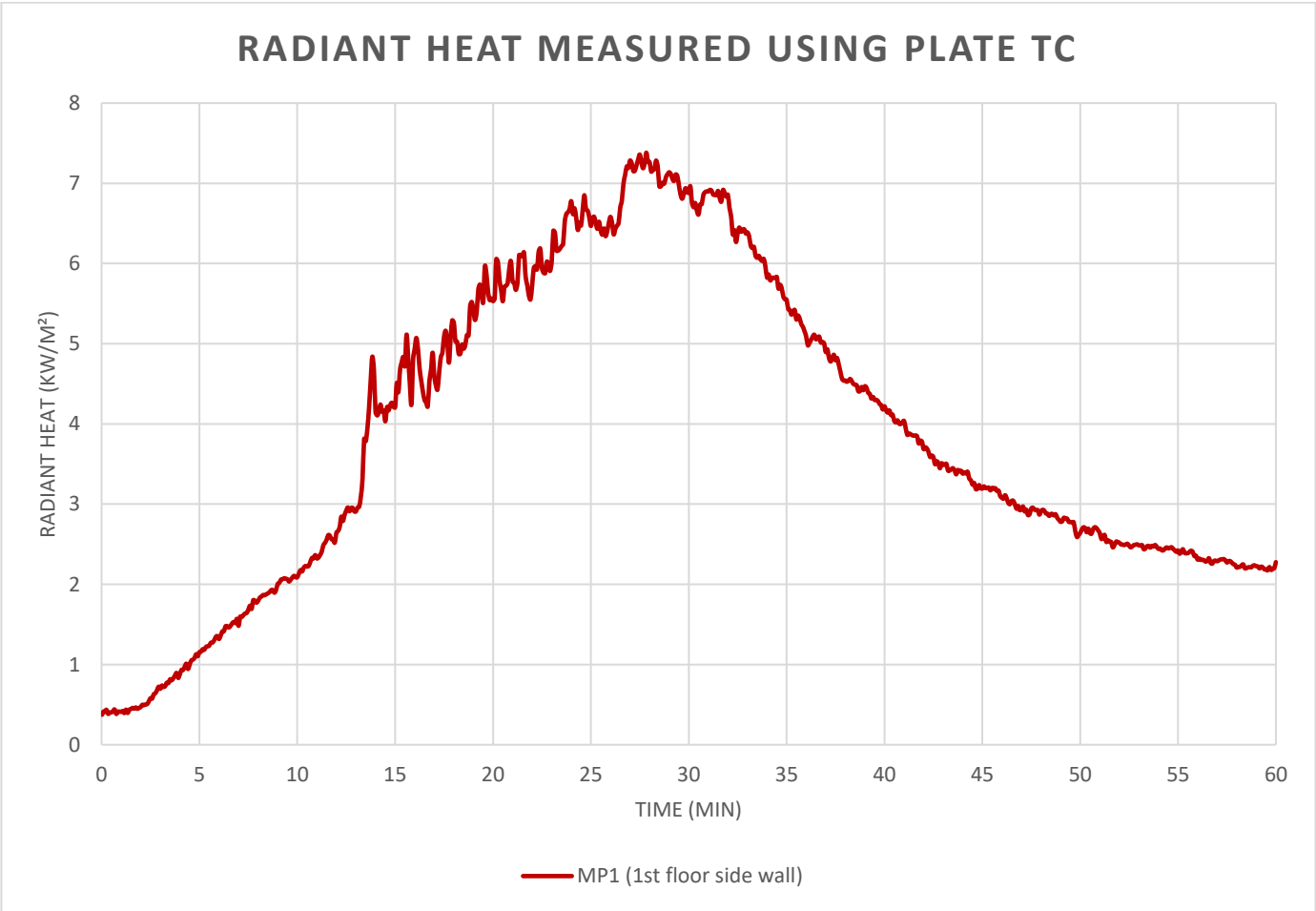

Data measurement from 2nd floor sidewall

Layout

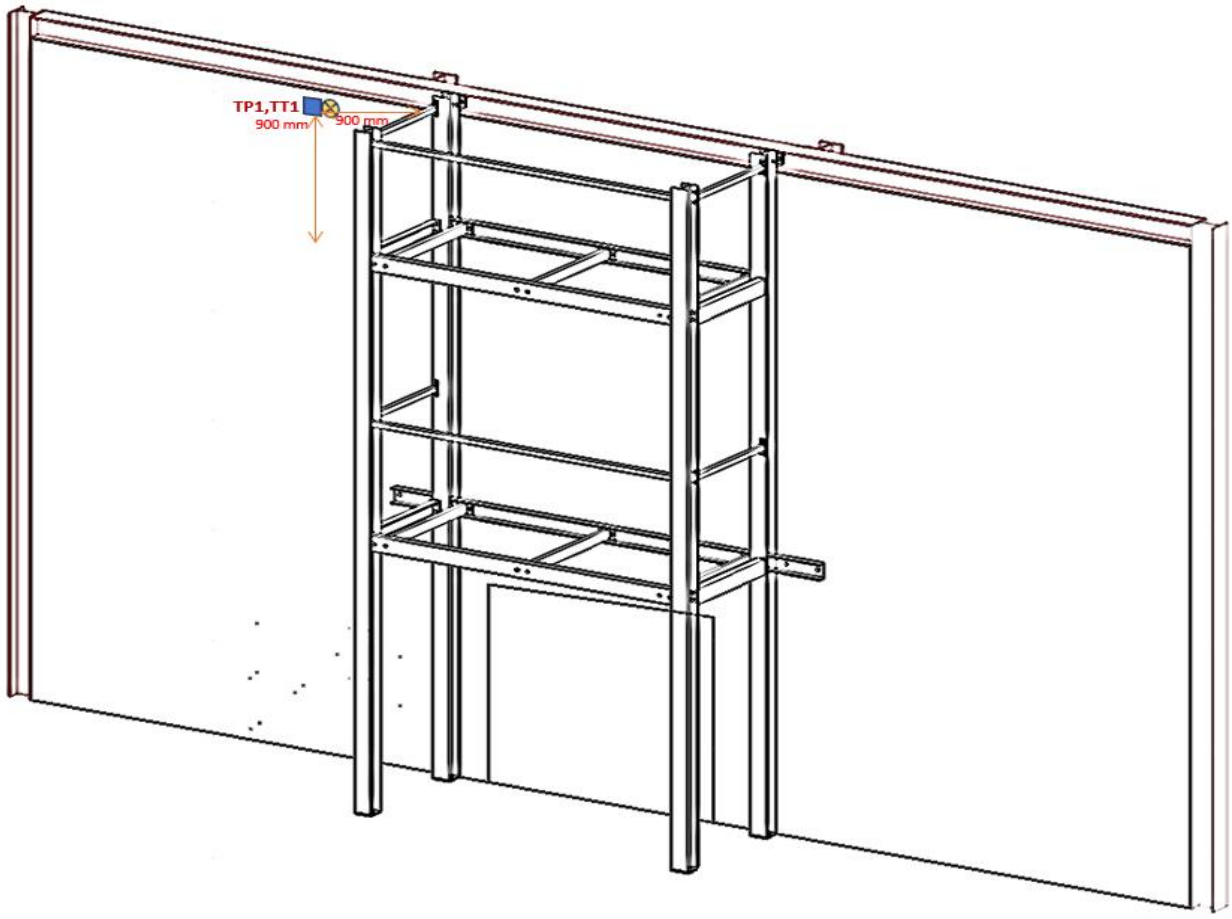

Temperature measured from the Plate TC from 2nd floor sidewall

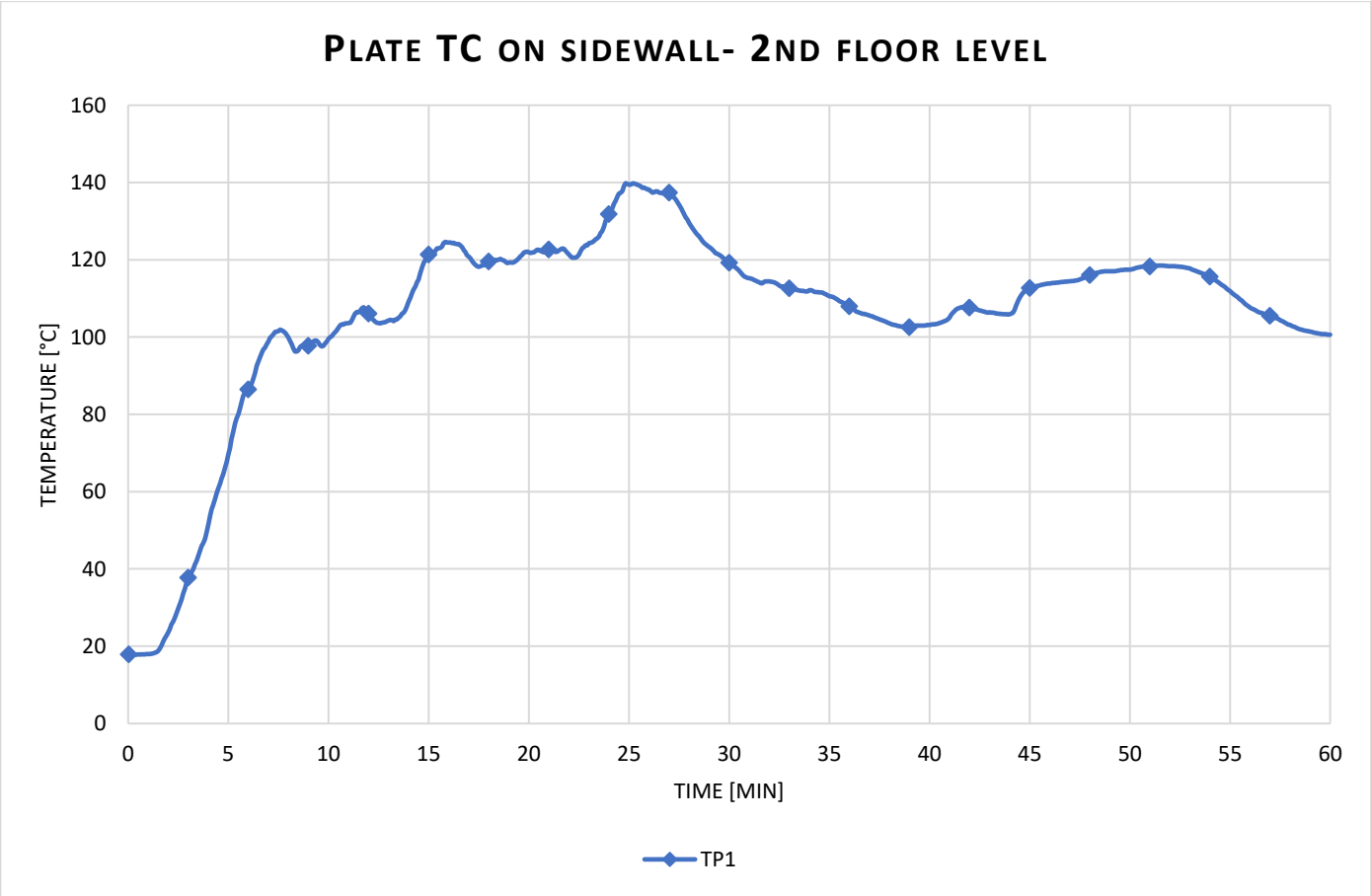

Temperature measured from the Inconel from 2nd floor sidewall

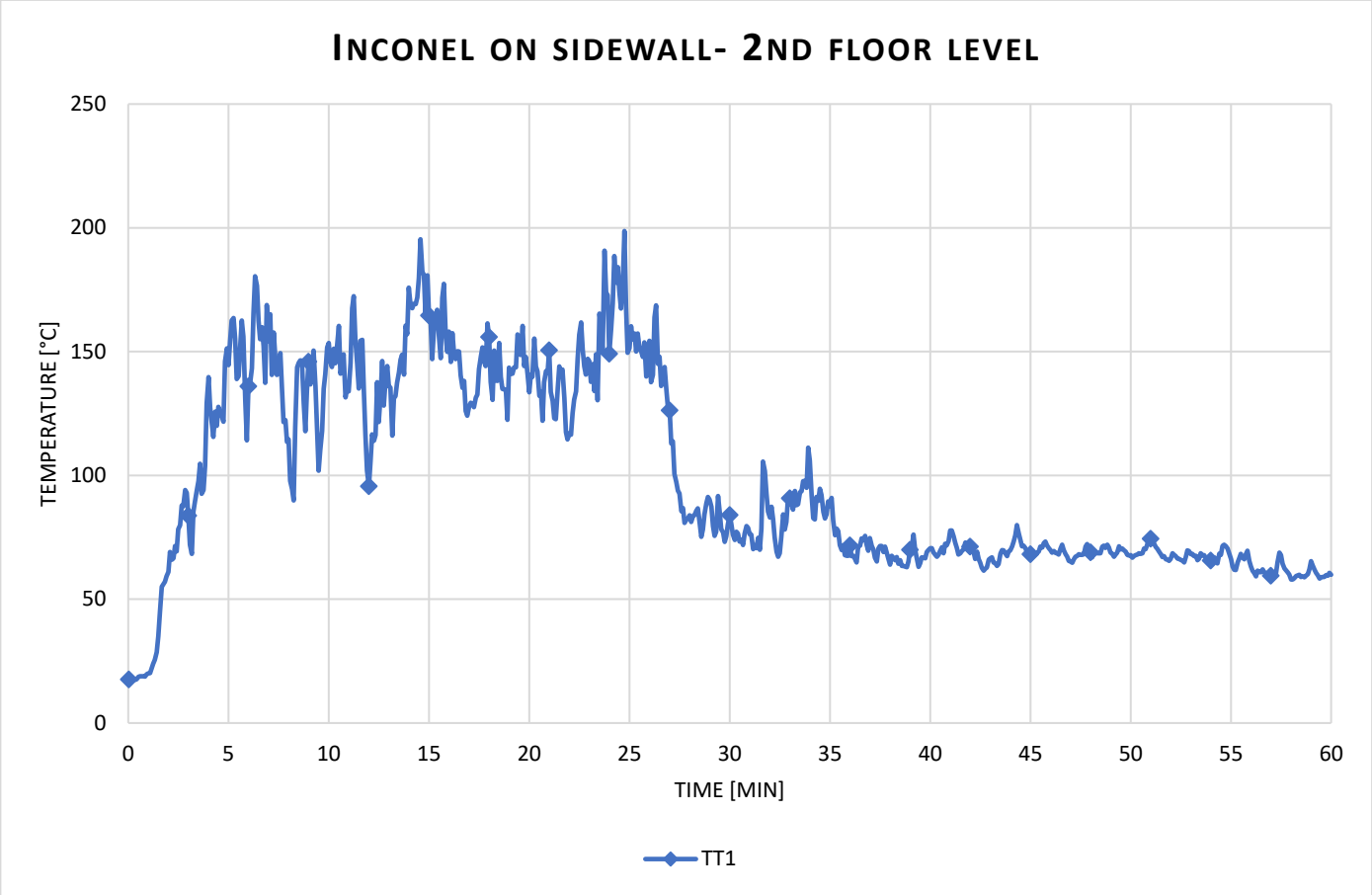

Radiant heat calculated from Plate TC

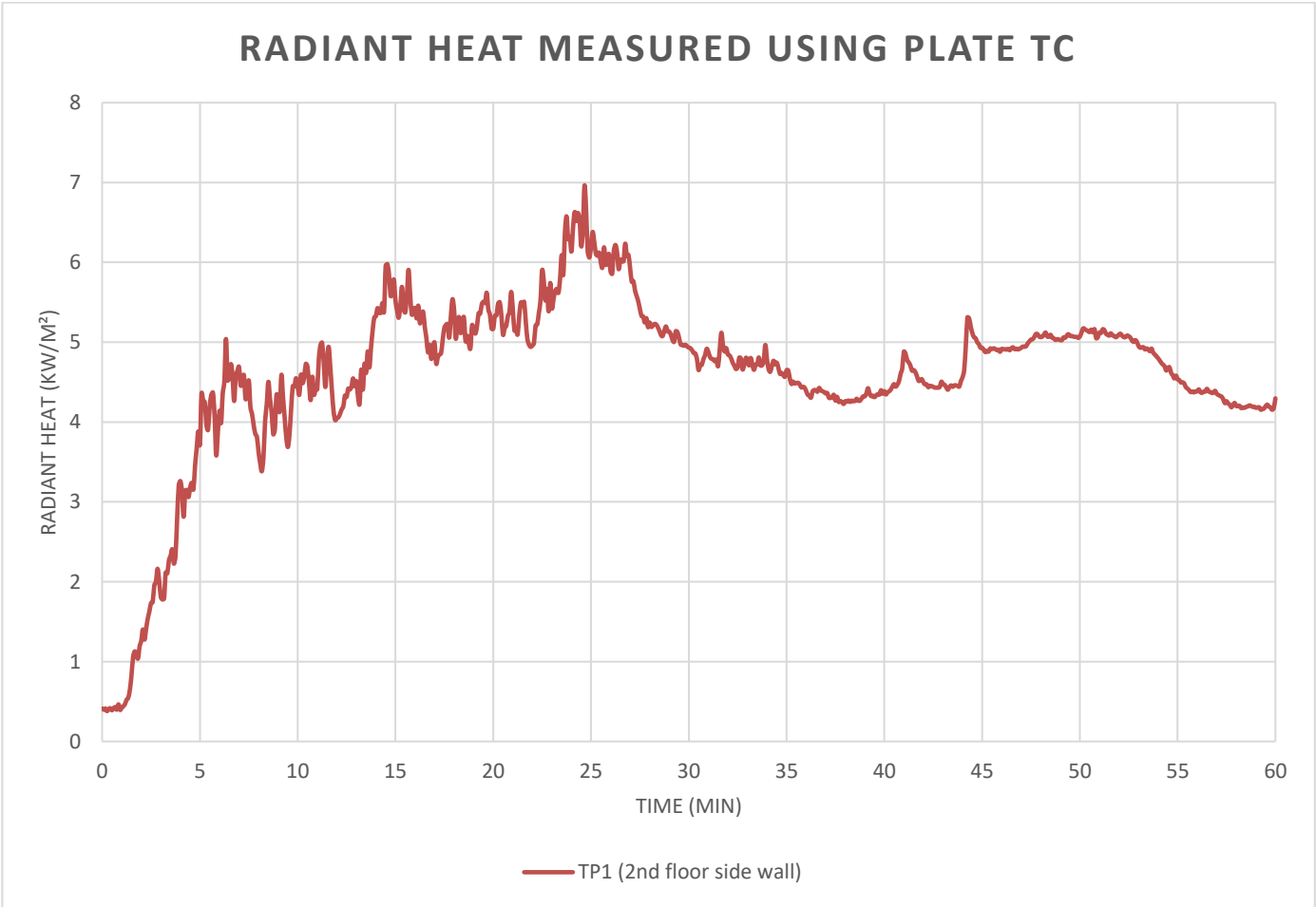

Data measurement from the steel C-section underneath 1st floor

Layout

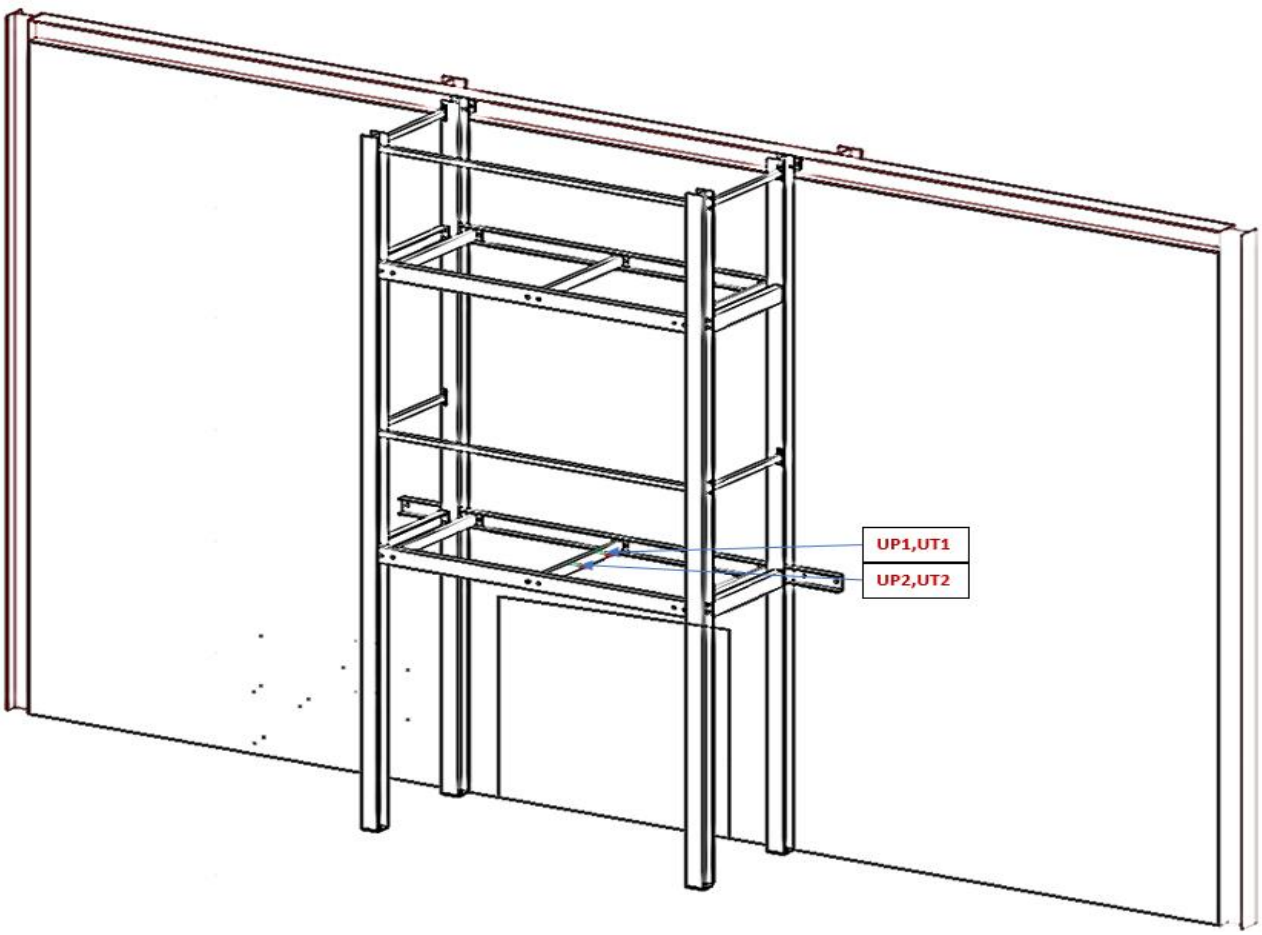

Temperature measured from the Plate TC's on the steel C-section underneath 1st floor

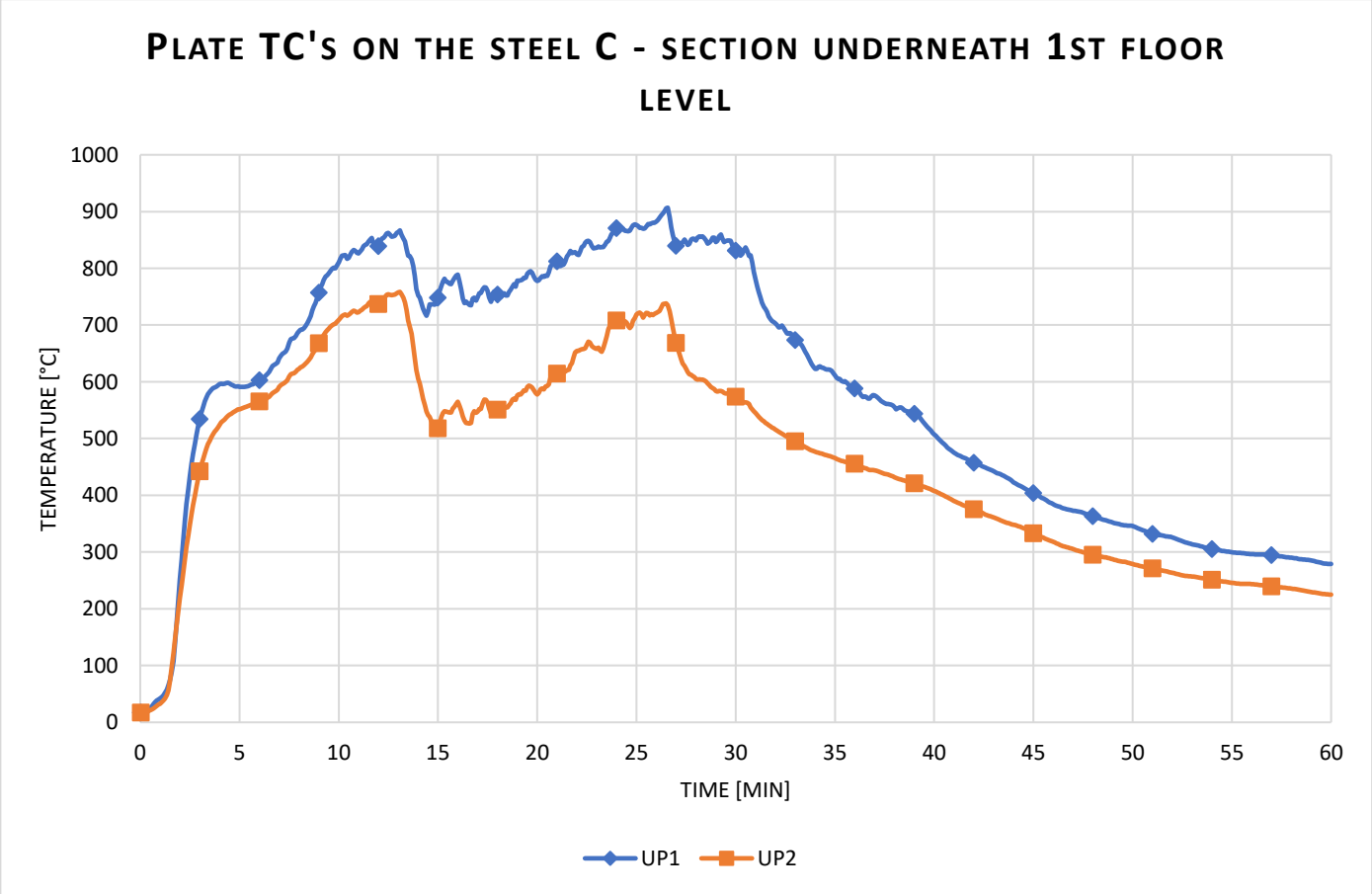

Temperature measured from the Inconels on the steel C-section underneath 1st floor

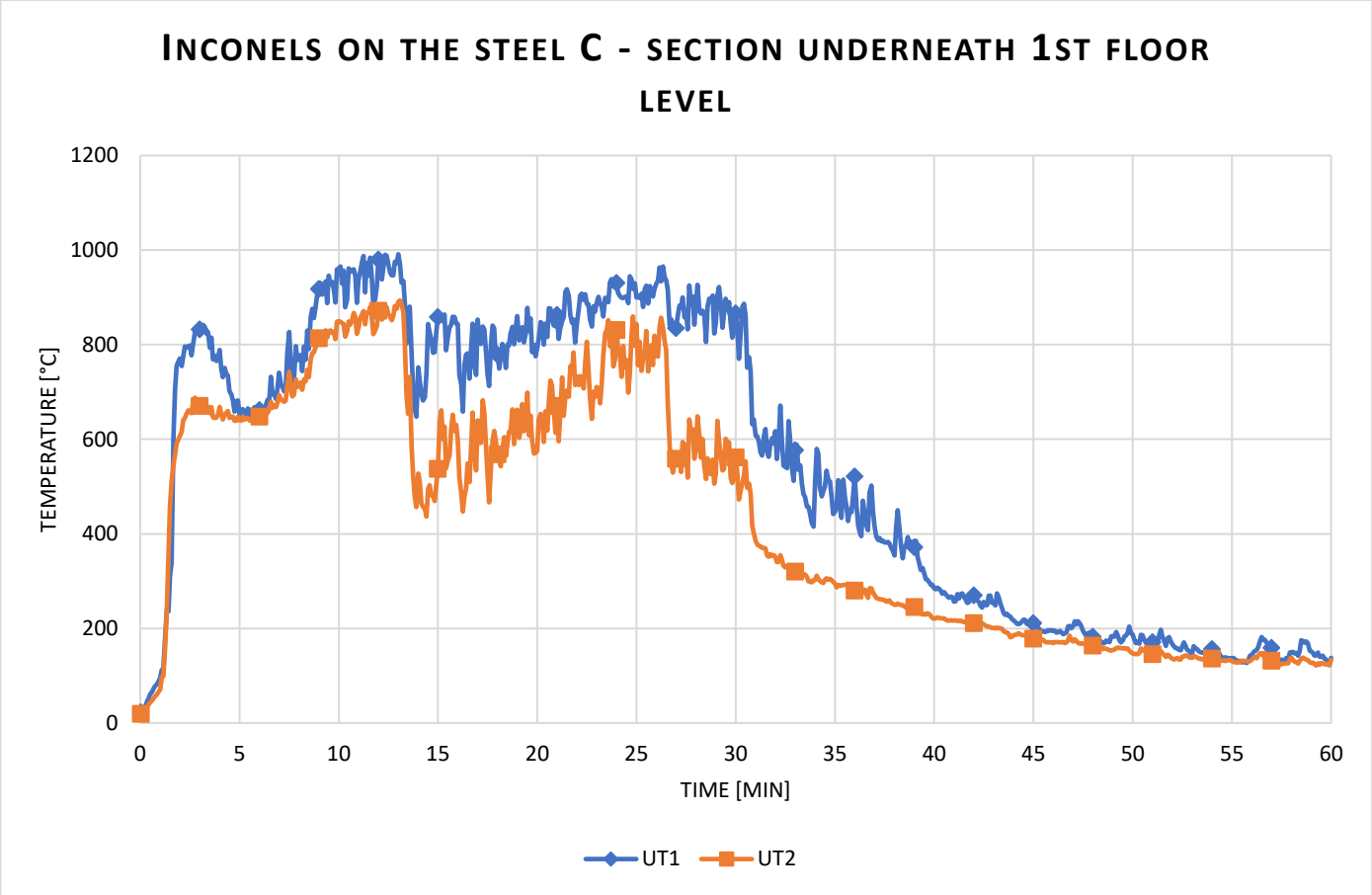

Radiant heat calculated from Plate TC

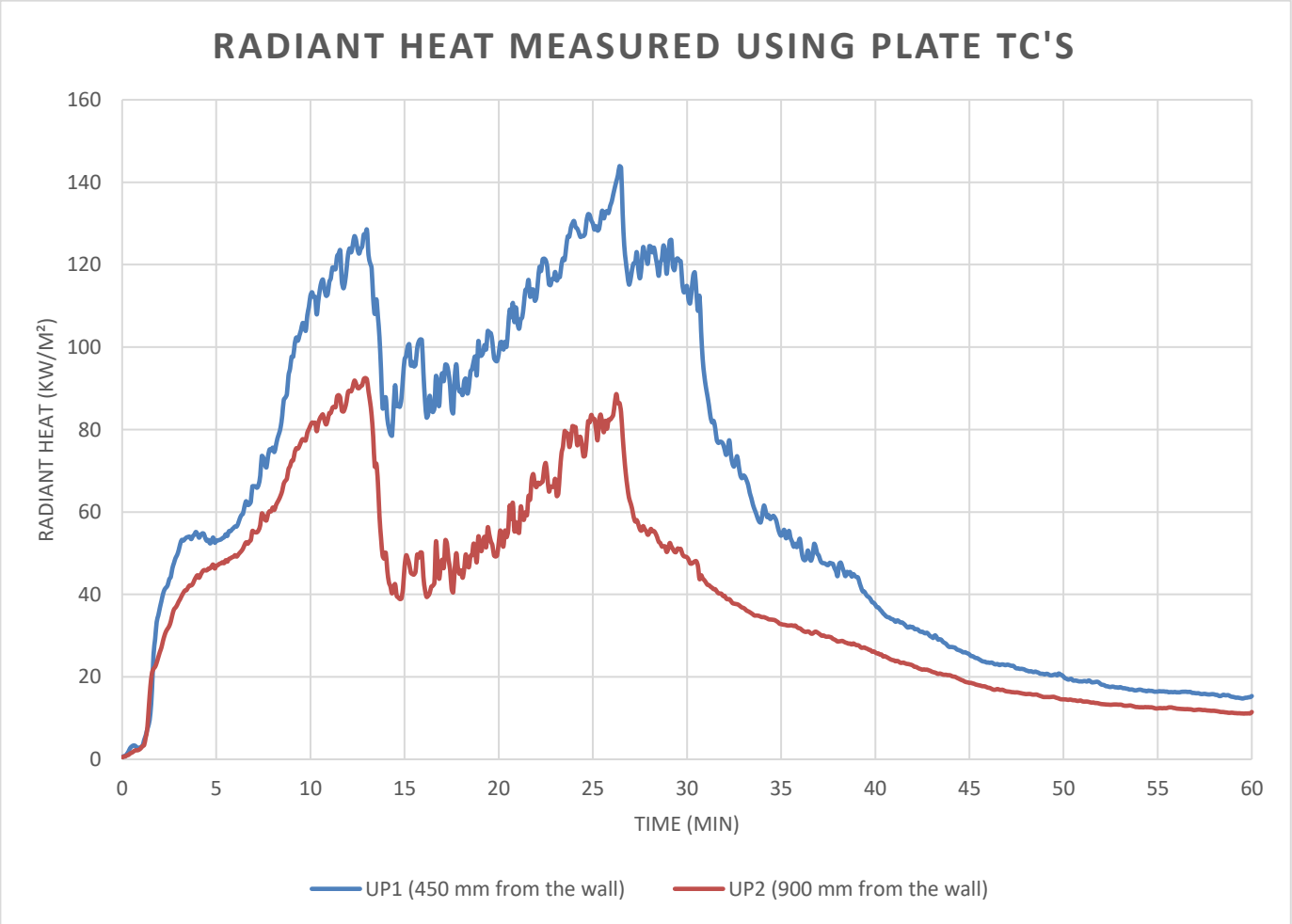

Data measurement from the steel C-section underneath 2nd floor

Layout

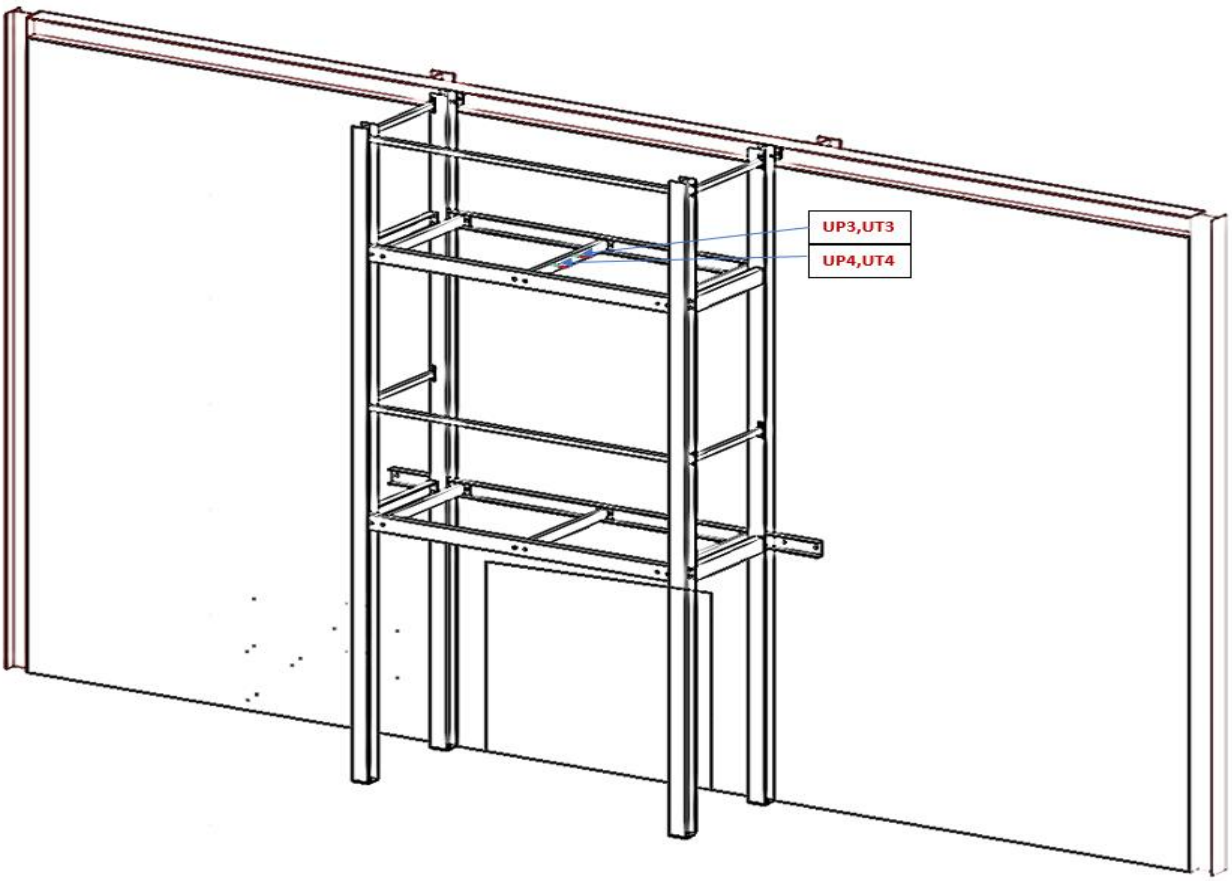

Temperature measured from the Plate TC's on the steel C-section underneath 2nd floor

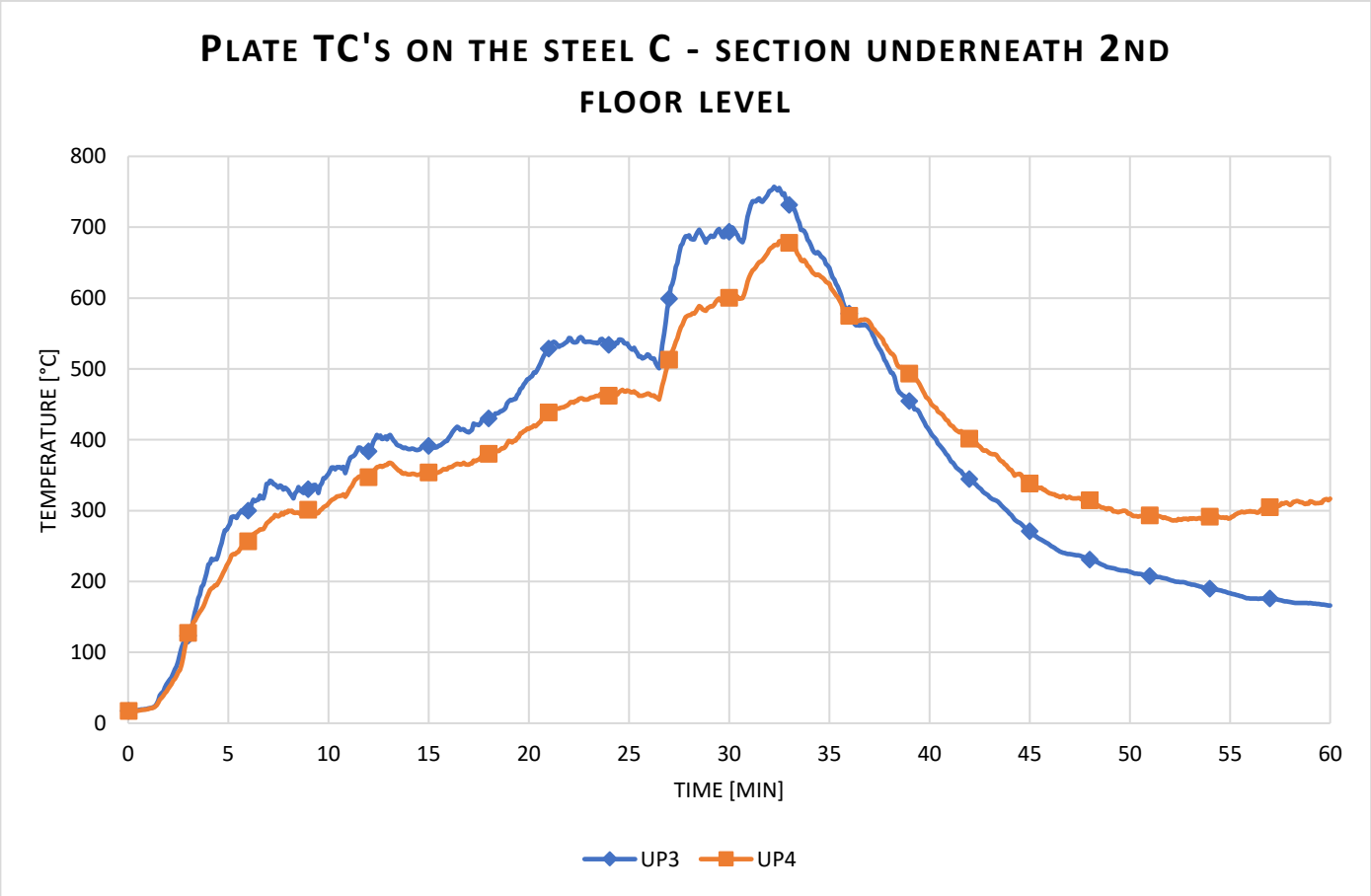

Temperature measured from the Inconels on the steel C-section underneath 2nd floor

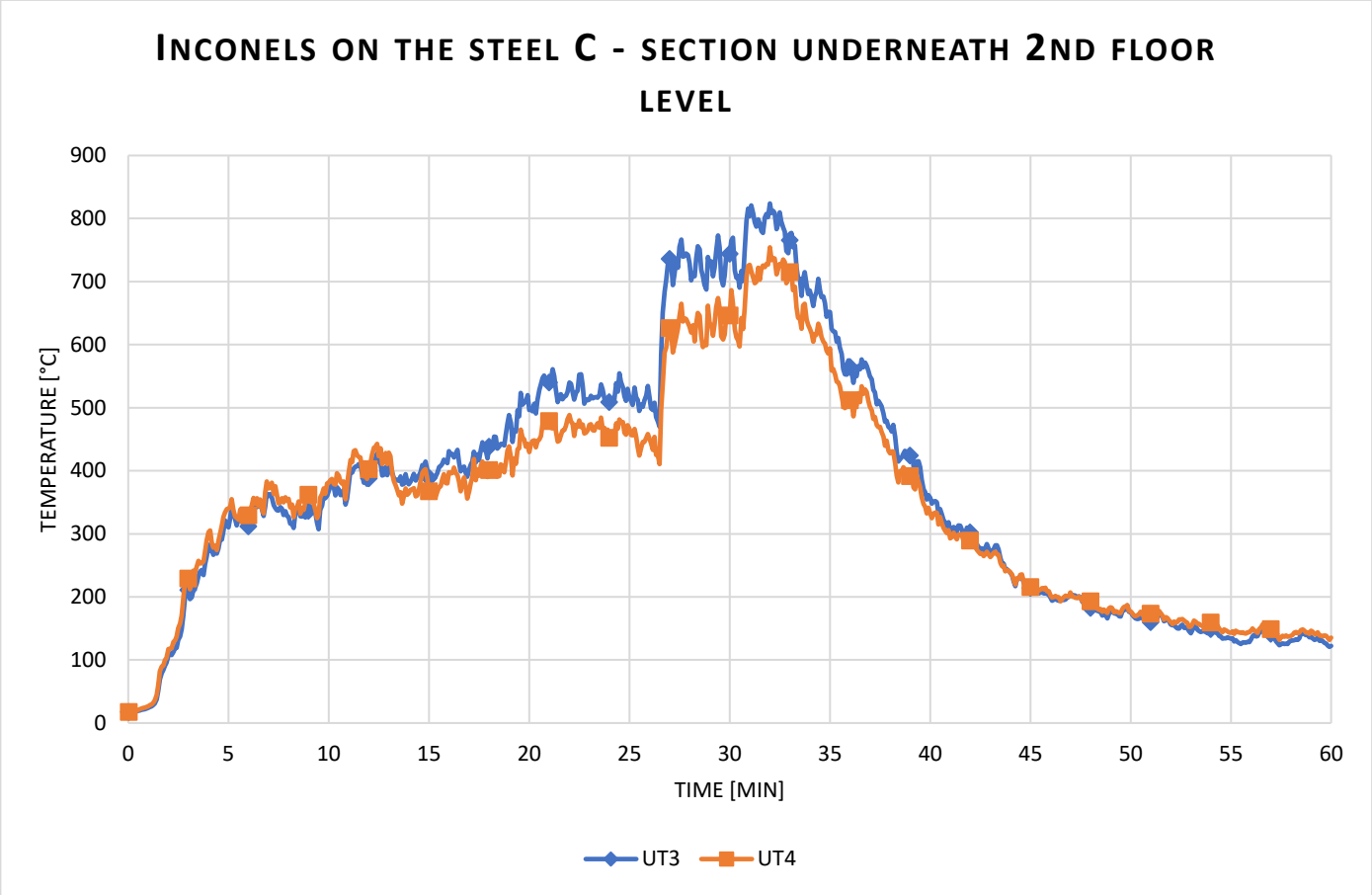

Radiant heat calculated from Plate TC's

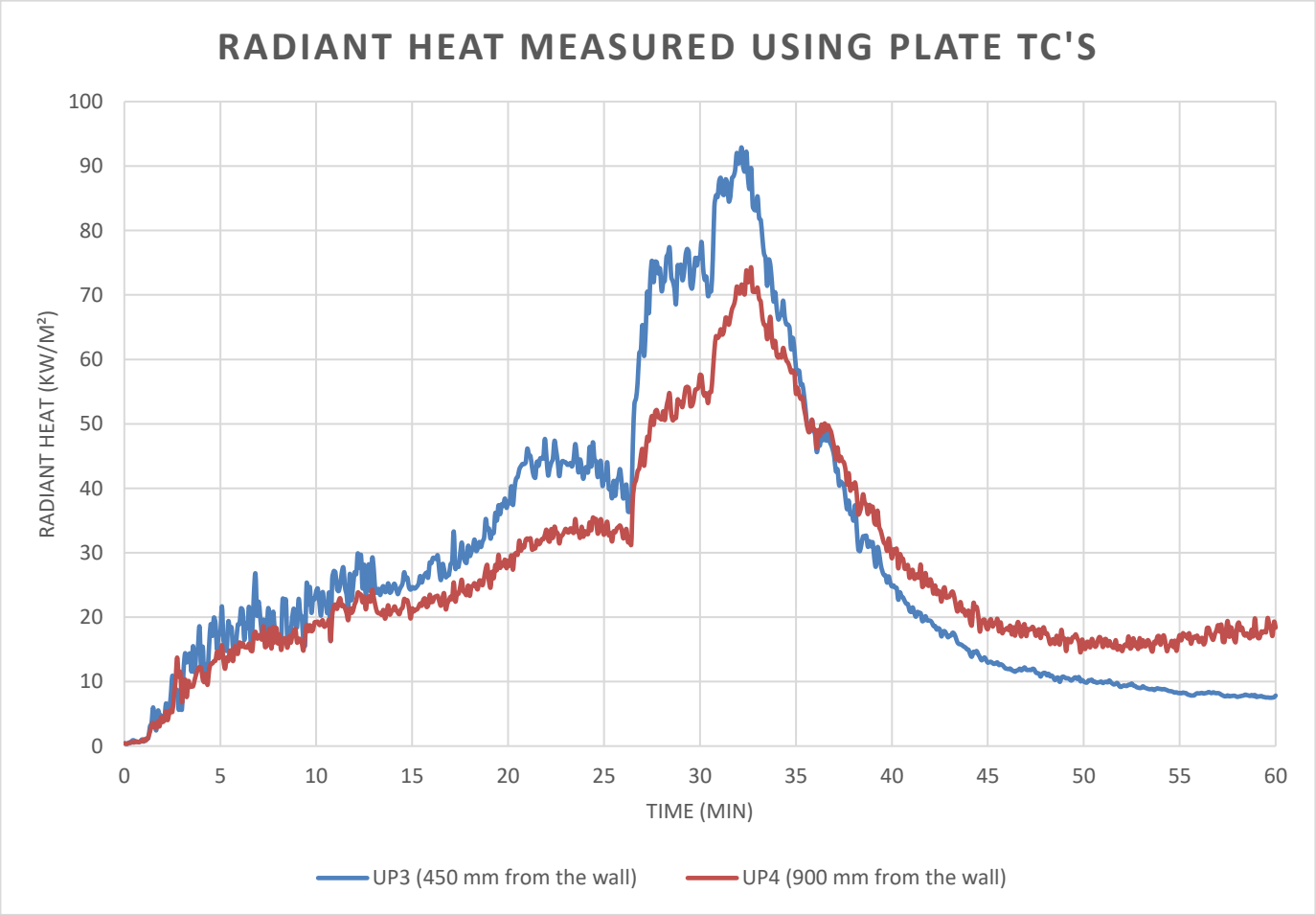

Data measurements from Inconels on side wall

Layout

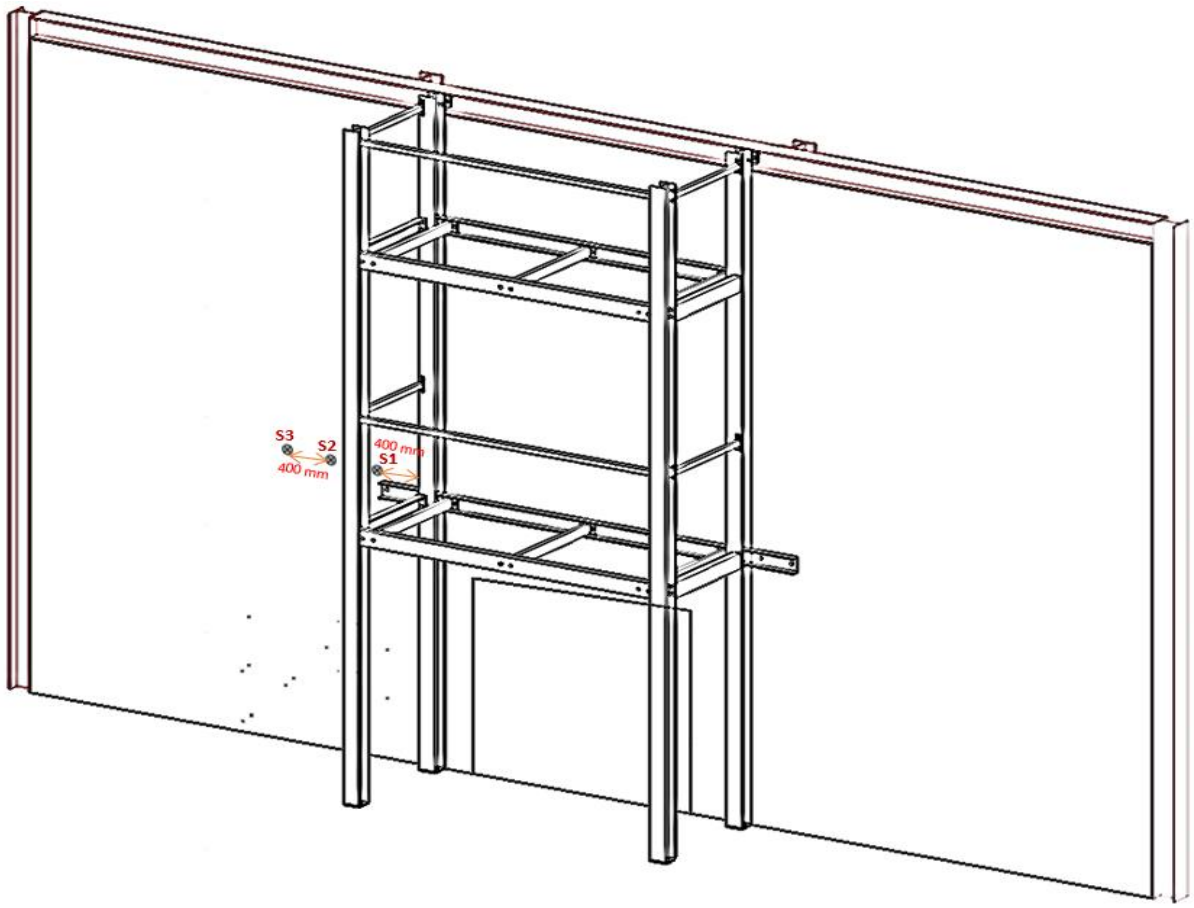

Temperature measured from the Inconels from the side wall – adjacent 1st floor level steel frame

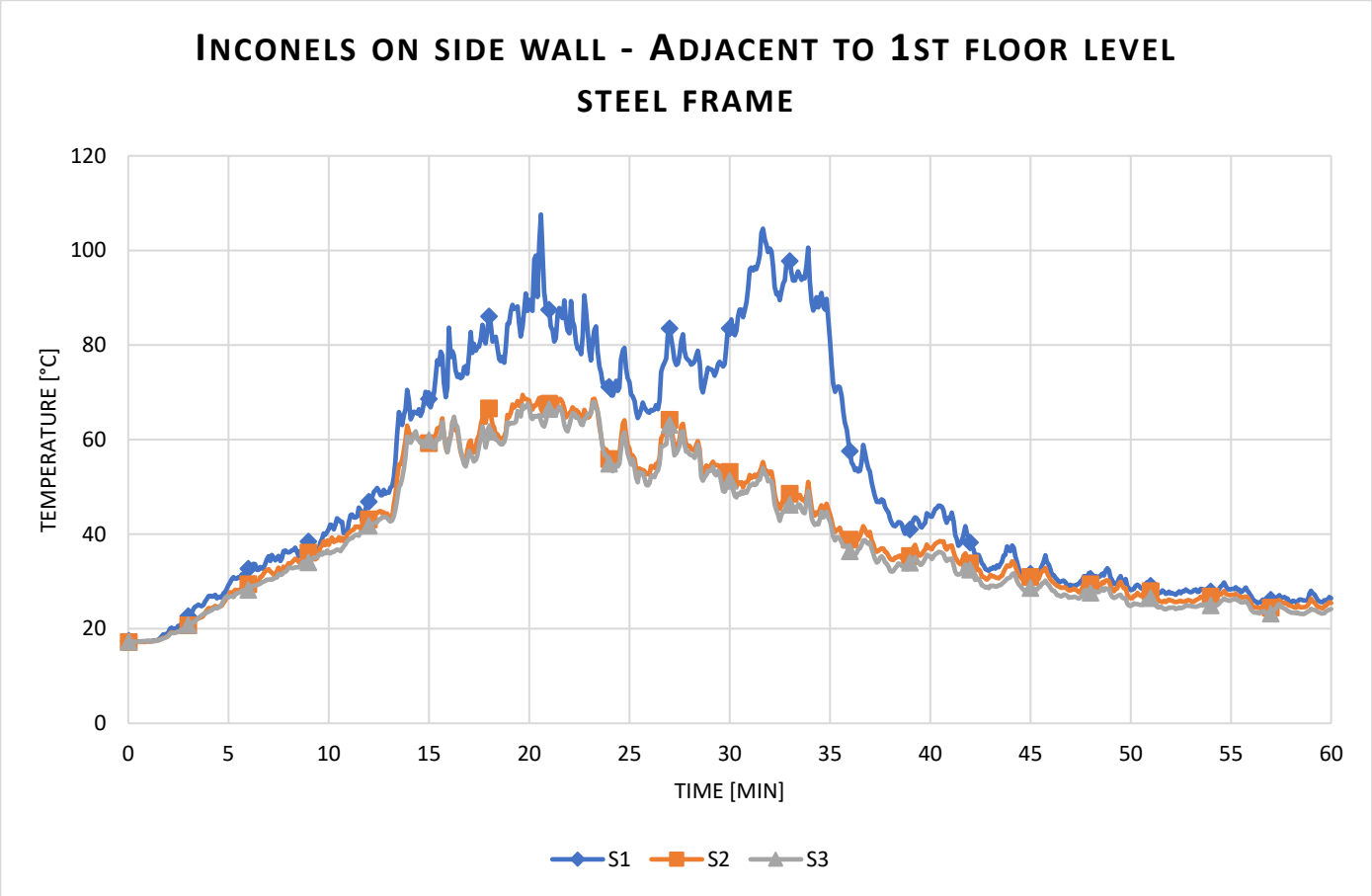

Data measurement from the Inconels on steel C - section

Layout

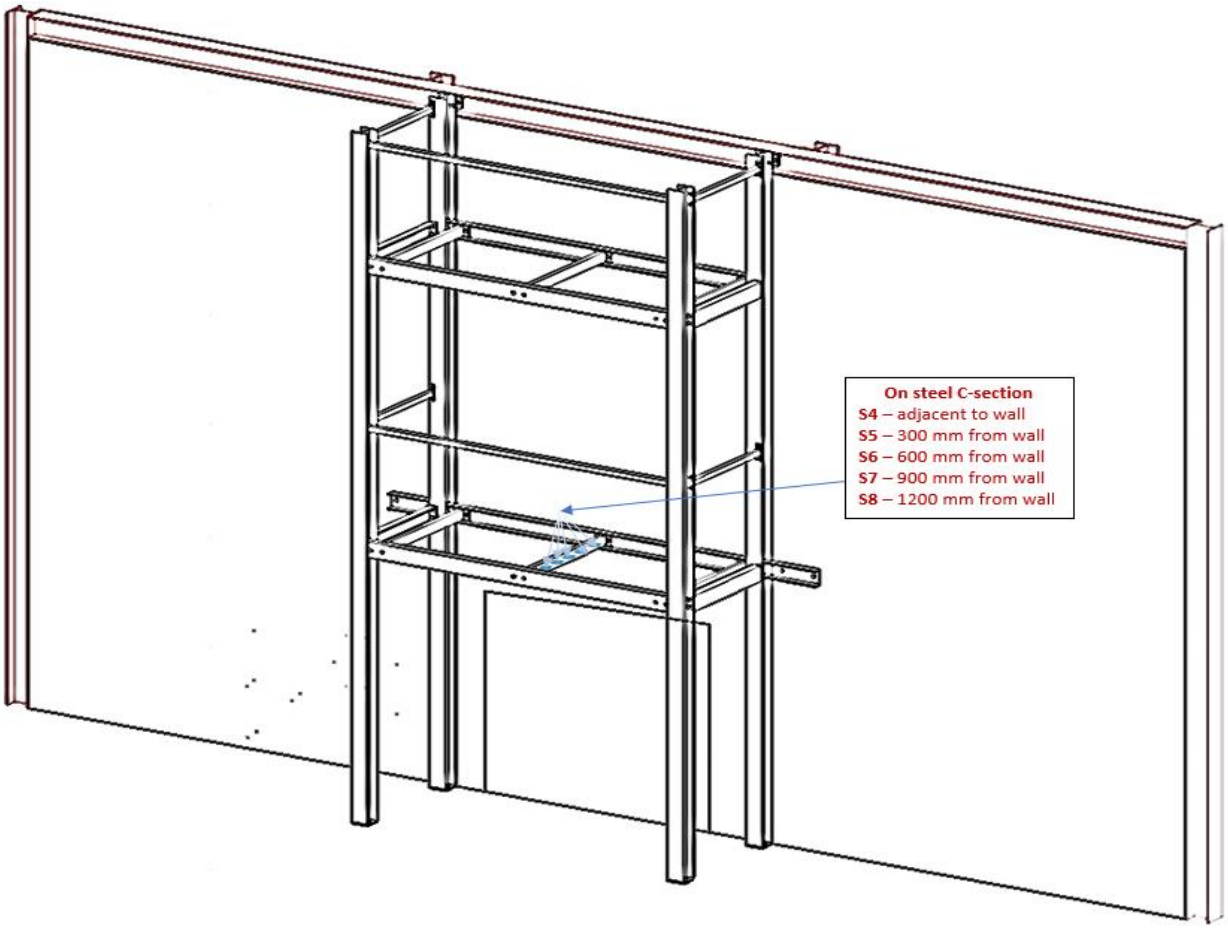

Temperature measured from the Inconels on steel C-section underneath 1st floor

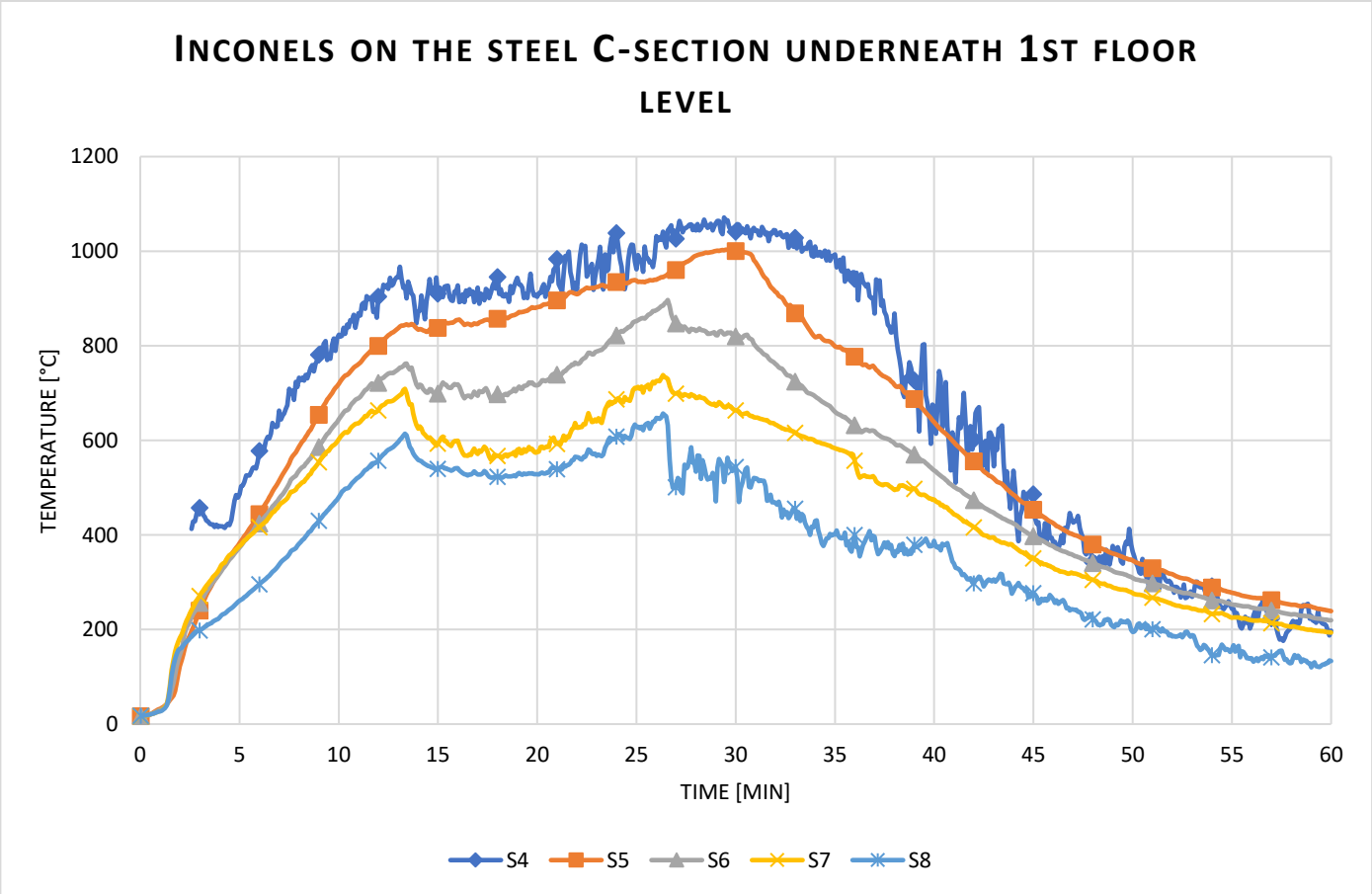

Data measurement from the Inconels facing crib (ground floor)

Layout

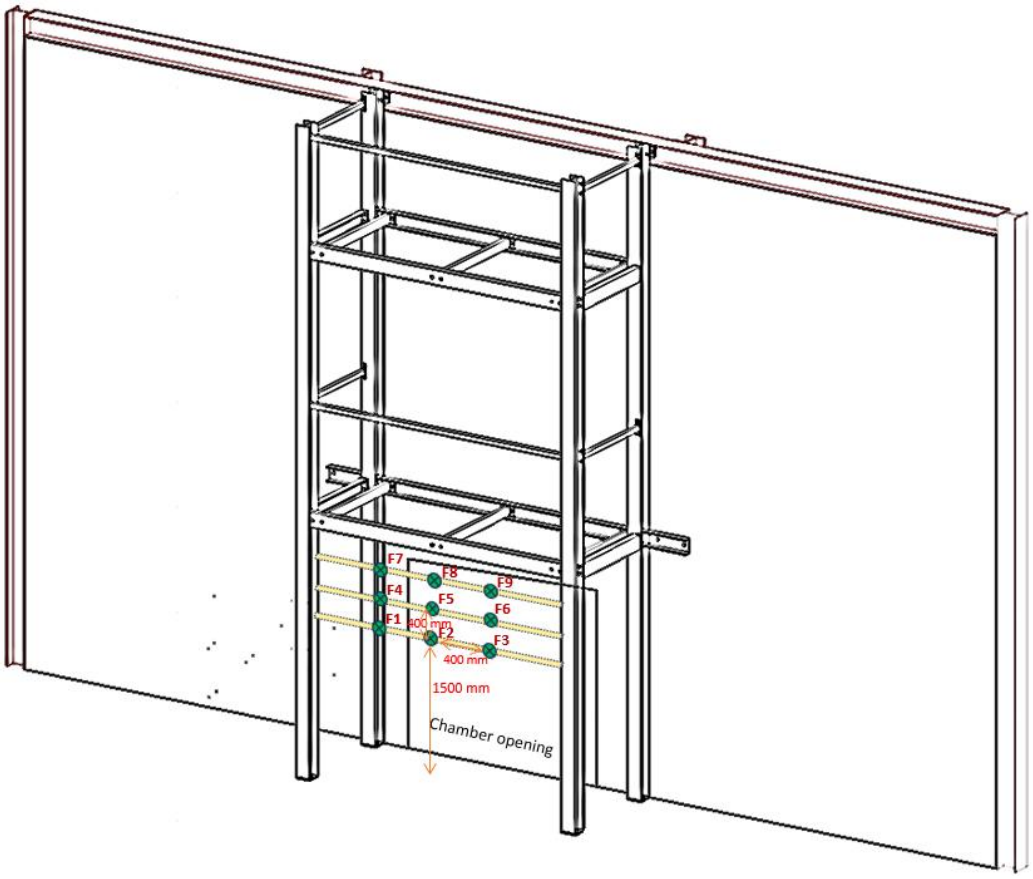

Temperature measured from the Inconels above the handrails facing the crib

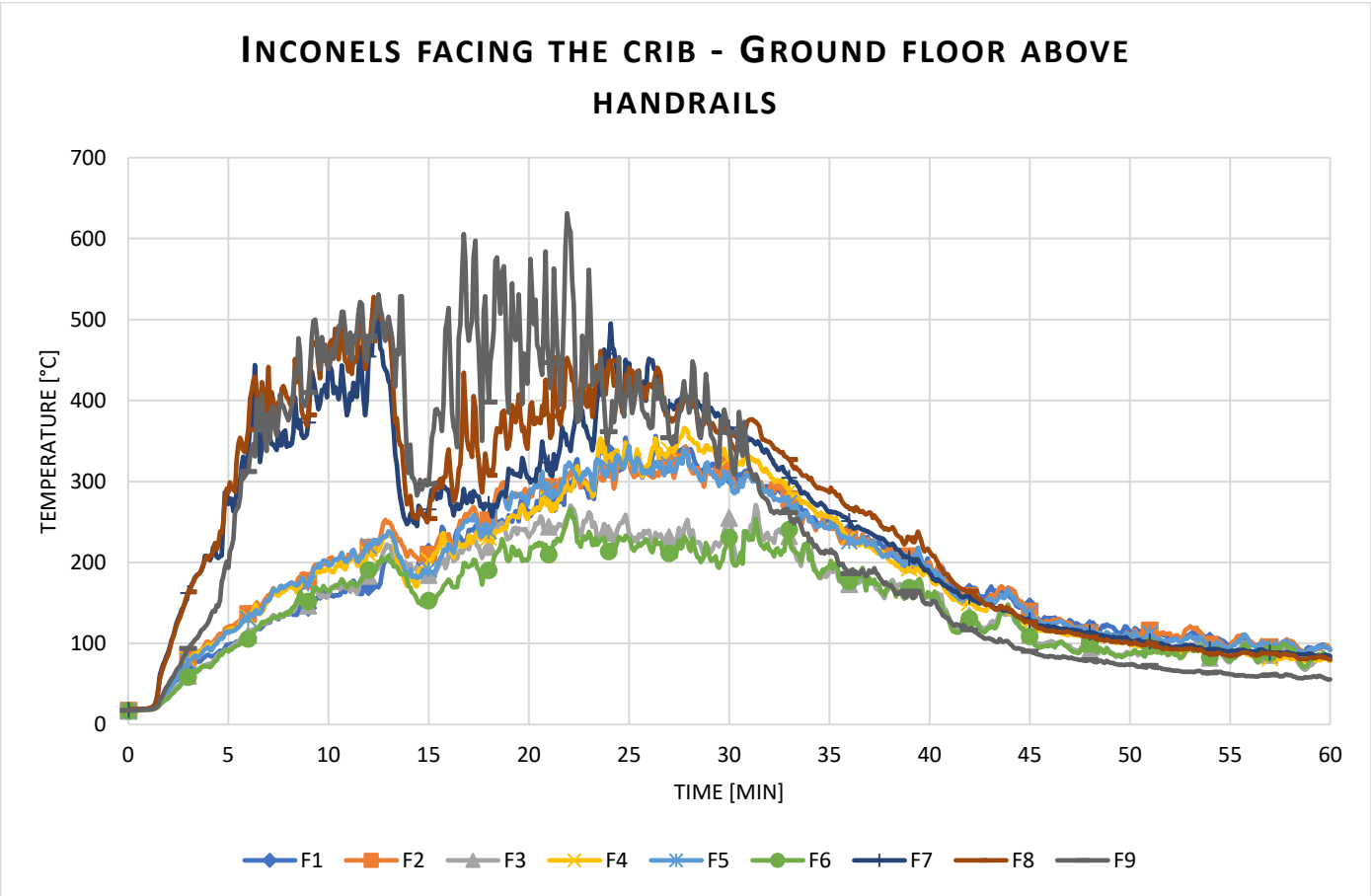

Data measurement from the Inconels on 1st floor

Layout

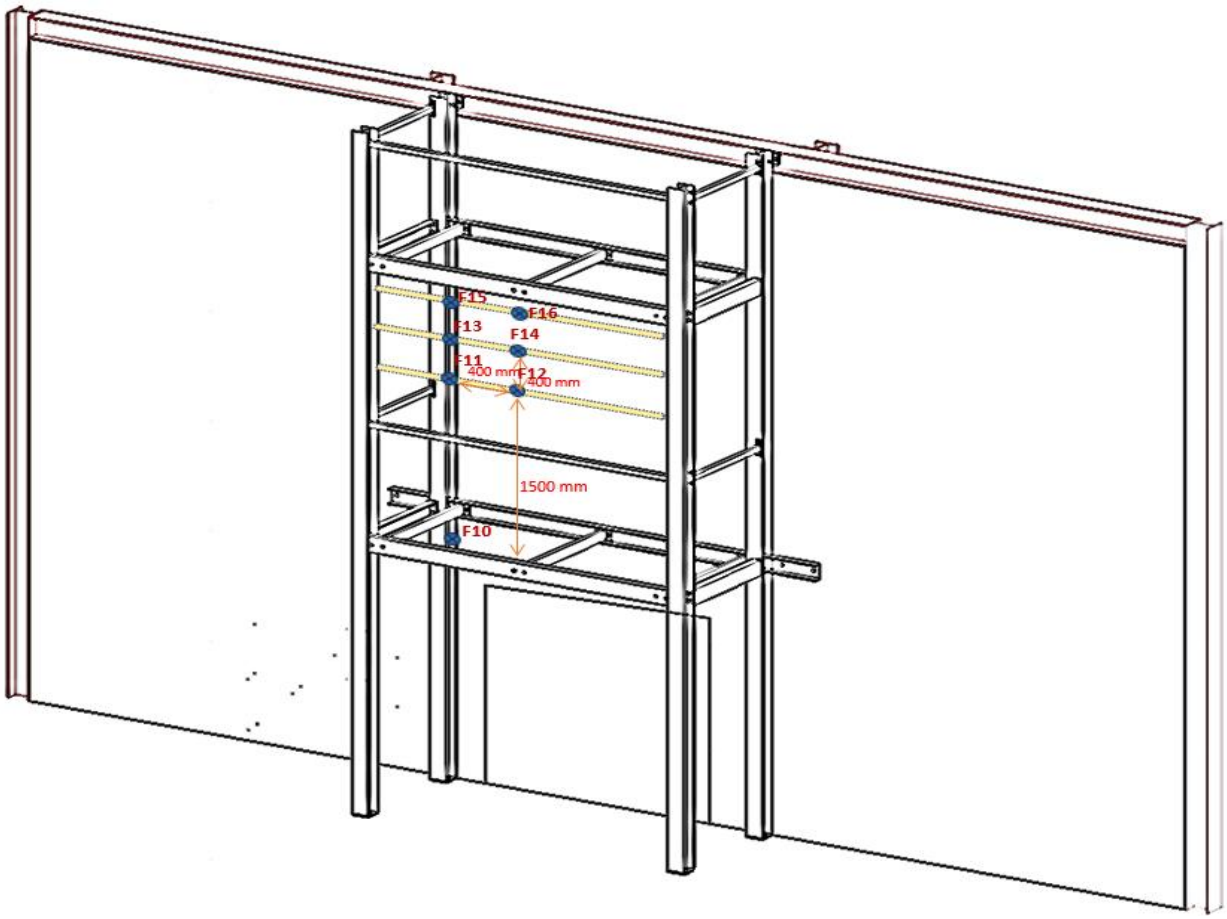

Temperature measured from the Inconels facing outwards on 1st floor on floor and above handrails

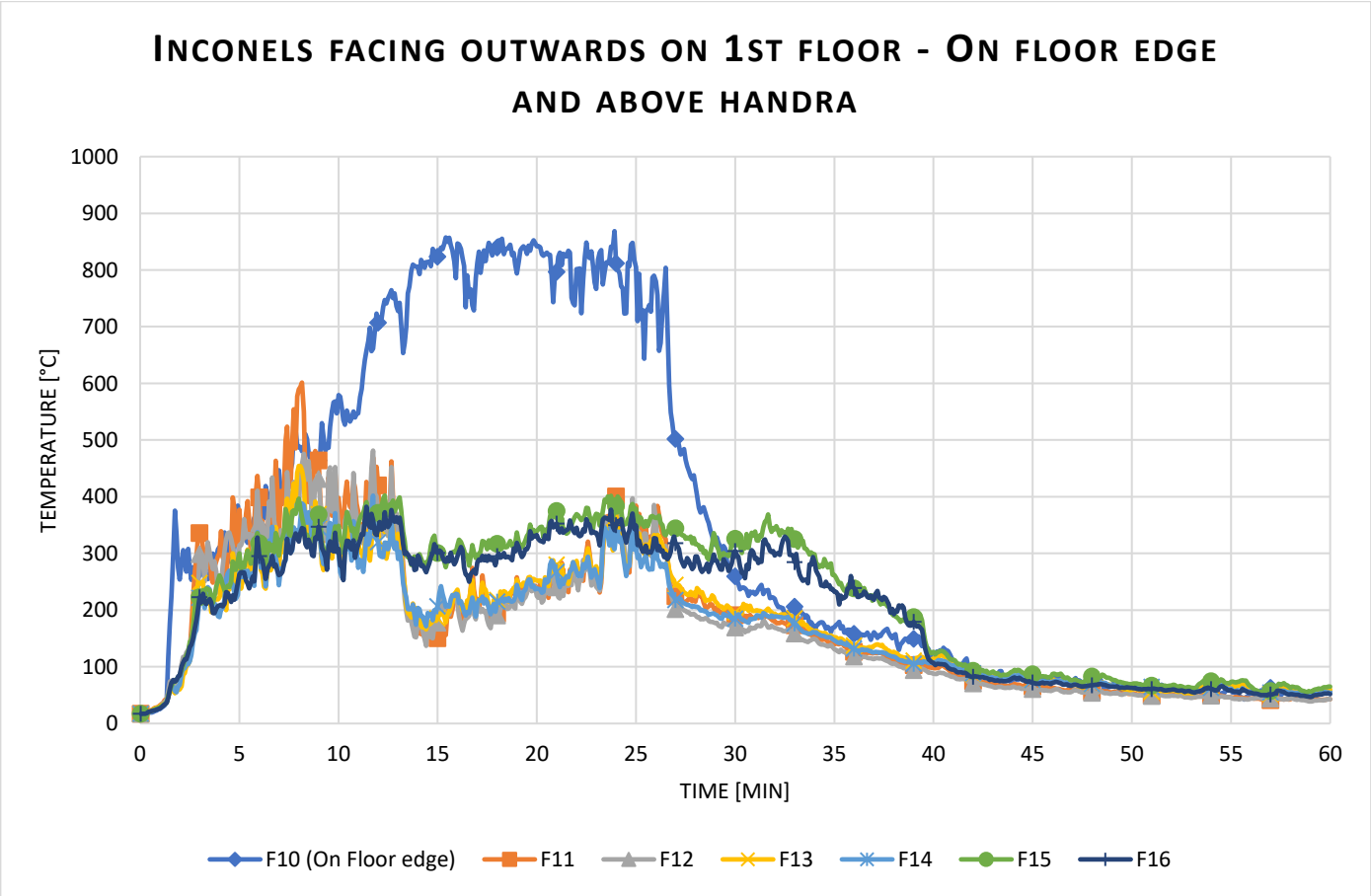

Data measurement from the Inconels on 2nd floor

Layout

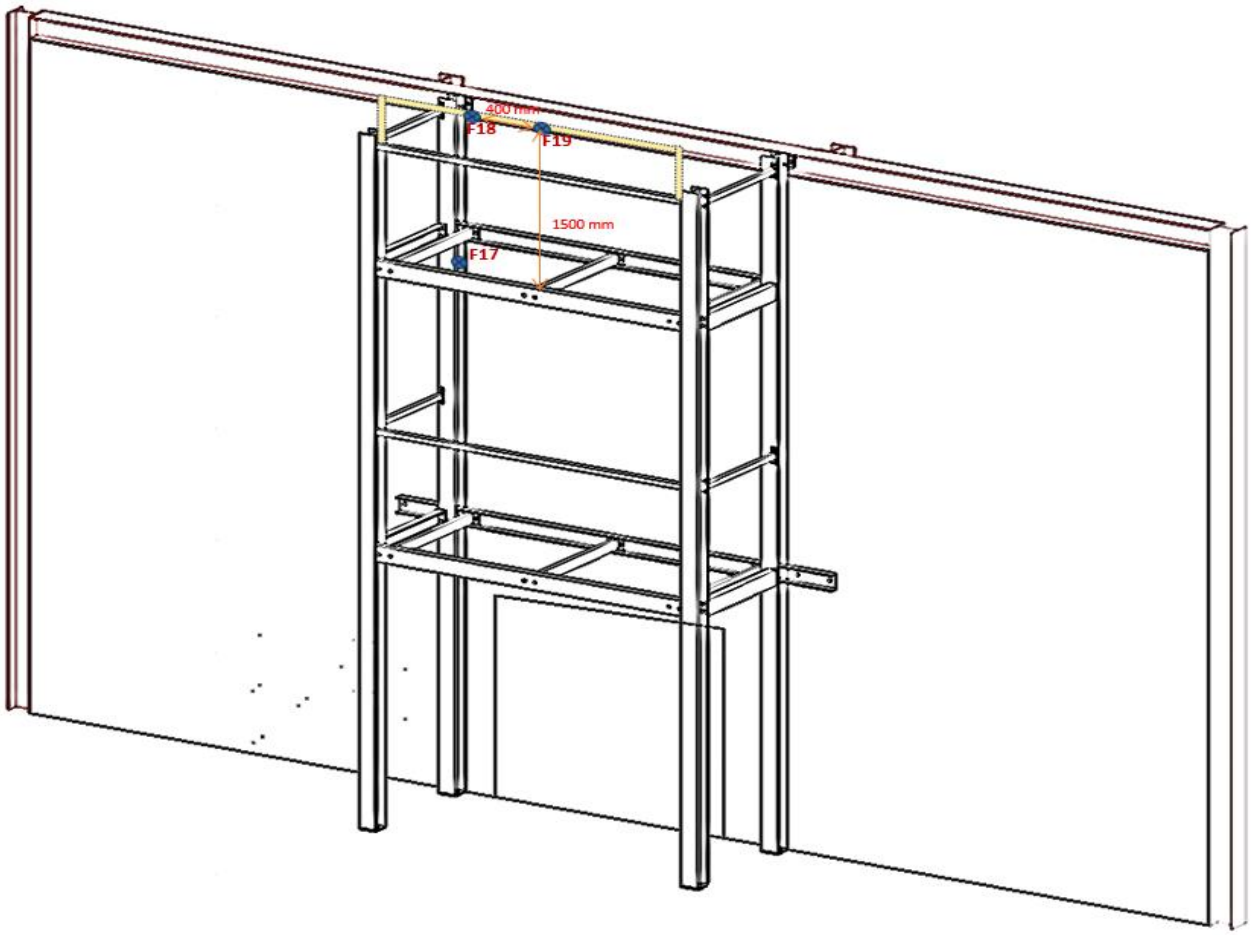

Temperature measured from the Inconels facing outwards on 2nd floor on floor and above handrails

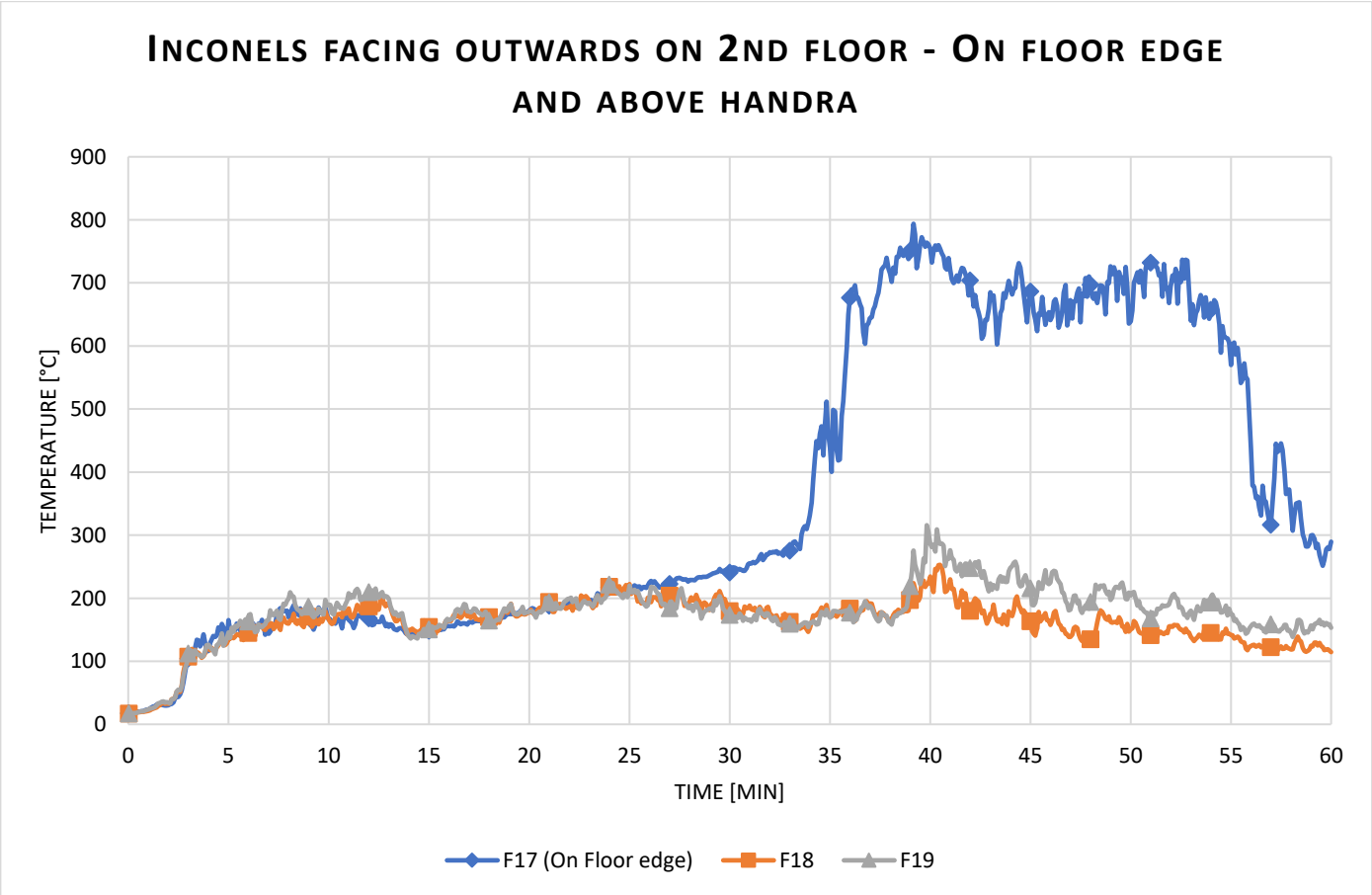

4. PICTURES TAKEN DURING THE TEST

00:03:42

00:08:26

00:06:09

0:26:59

0:30:38

0:43:37

0:52:23

0:56:56

END OF THE TEST

Test date: 19th of February 2024

Project Nr: EUI-23-000784

Test Nr: EUI-23-CHB-000784A

1. INSTRUMENTATION LAYOUT

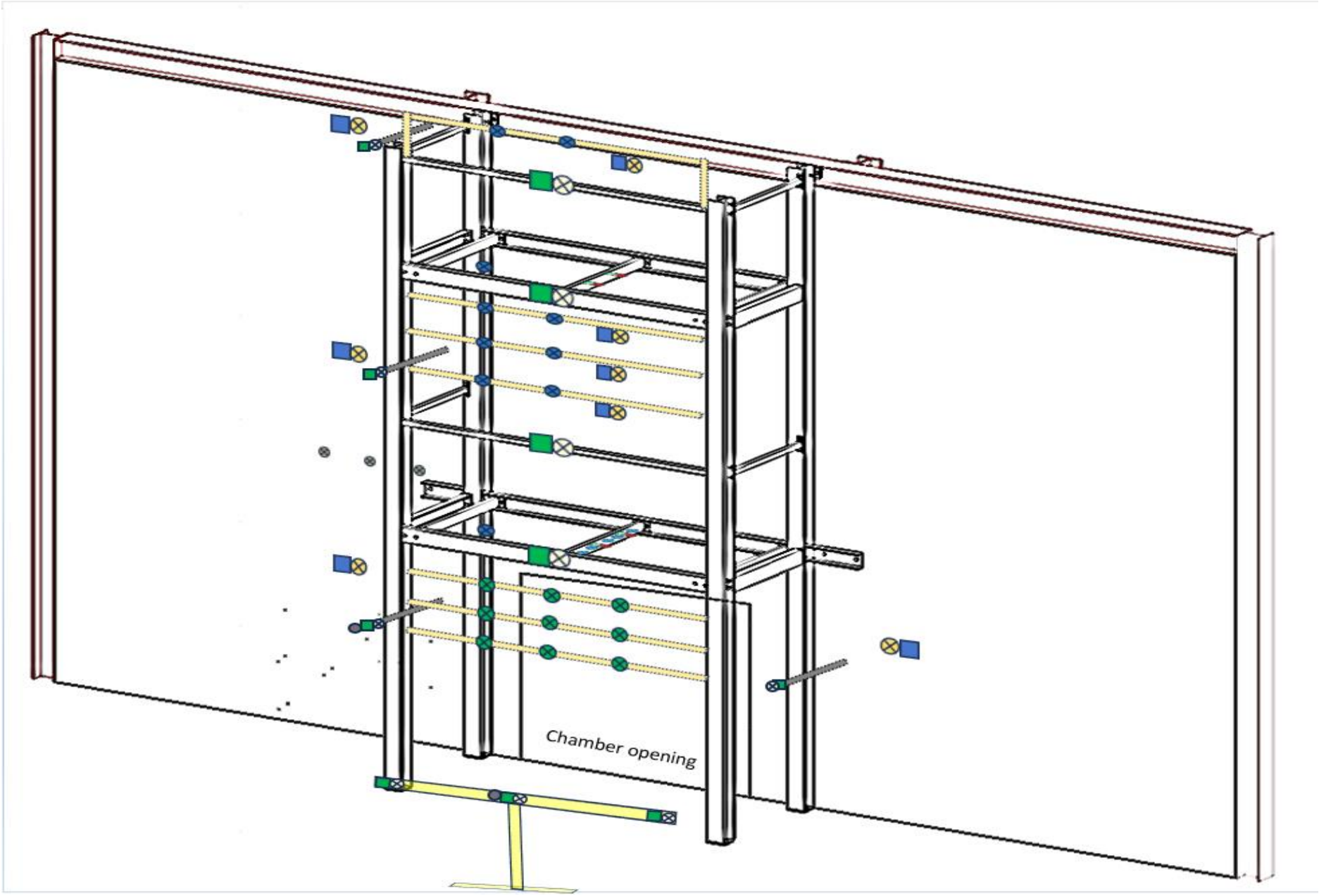

Plate TC on exposed face

Inconel TC on exposed face

Inconel TC on wall

Plate TC on wall

Heat flux meter

2x Plate TC's underside the Balcony floor –
At 450 mm and 900 mm from the wall

2x Inconel TC's underside the Balcony floor –
At 450 mm and 900 mm from the wall

3m long TC facing outwards,
extends out by 50 mm

TC on the steel C-section
S4 – exposed edge of wall
S5 – 300mm away from the wall
S6 – 600mm away from the wall
S7 – 900mm away from the wall
S8 – 1200mm away from the wall

3m long TC facing the crib,
extends out by 50 mm

Nomenclature:

The first word of each acronym is to identify their position:

G - Ground floor

S – Side edge to the chamber opening

M – Middle floor

T – Top floor

F – Front facing Inconels

The second word denotes the instrument:

Fluxmeter (R), Plate TC (P), Inconel (T)

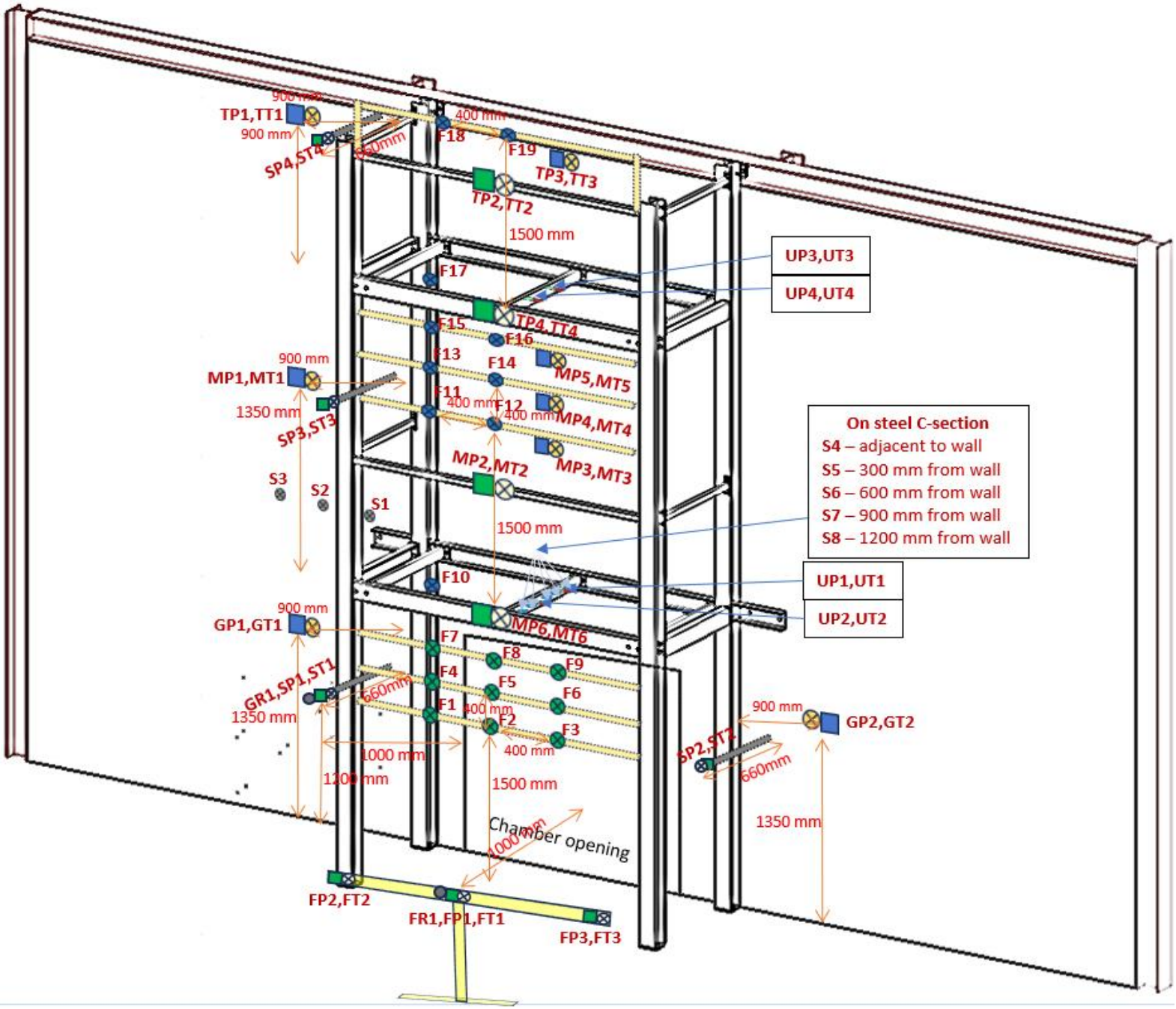
TP1,TT1
900 mm
SP4,ST4
660mm
400 mm
F18
F19
TP3,TT3
TP2,TT2
1500 mm
F17
UP3,UT3
UP4,UT4
TP4,TT4
F15
F16
F13
F14
MP5,MT5
MP1,MT1
1350 mm
F11
400 mm
F12
MP4,MT4
SP3,ST3
MP3,MT3
MP2,MT2
S3
S2
S1
1500 mm
On steel C-section
S4 – adjacent to wall
S5 – 300 mm from wall
S6 – 600 mm from wall
S7 – 900 mm from wall
S8 – 1200 mm from wall
F10
UP1,UT1
UP2,UT2
GP1,GT1
MP6,MT6
F7
F8
F9
GR1,SP1,ST1
F4
F5
F6
F1
F2
F3
1000 mm
1200 mm
1500 mm
GP2,GT2
SP2,ST2
Chamber opening
1000 mm
FP2,FT2
FR1,FP1,FT1
FP3,FT3

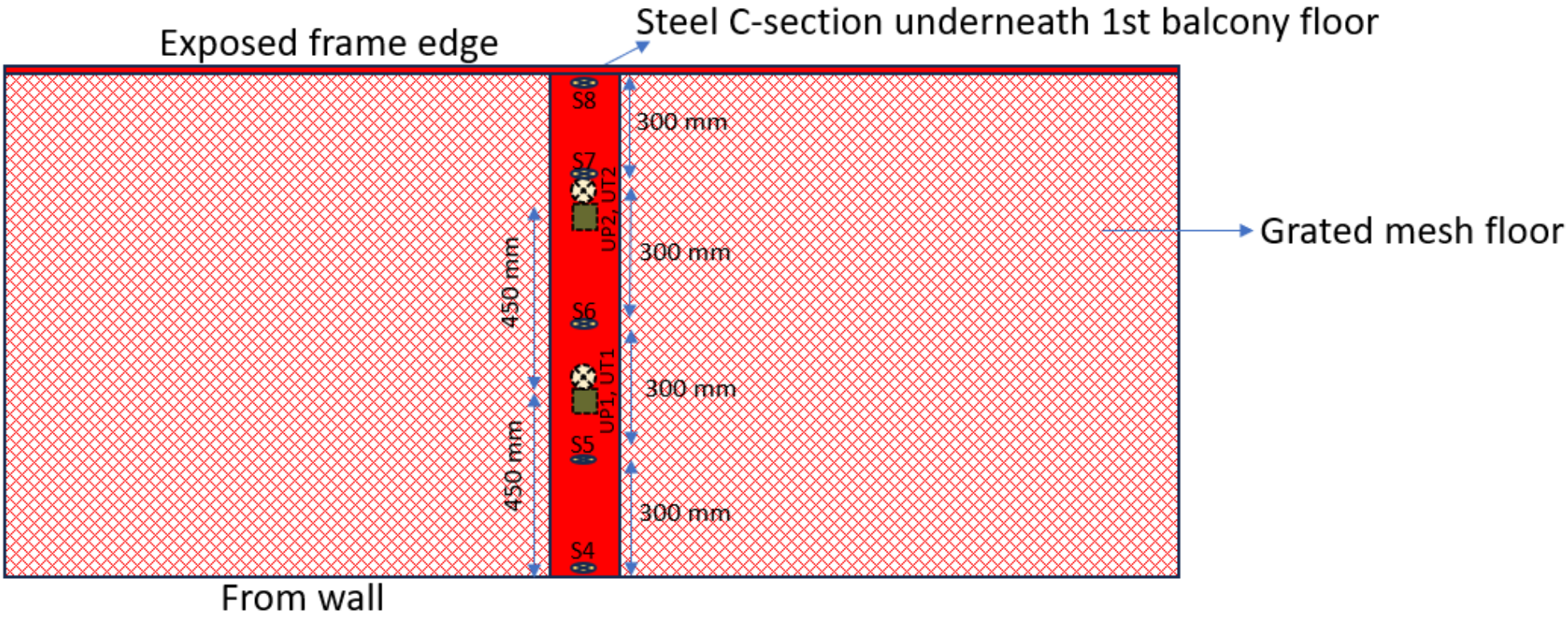

S4 – 10 mm from the wall on Steel C section to measure steel temperature
S5 – 300 mm from the wall on Steel C section to measure steel temperature
S6 – 600 mm from the wall on Steel C section to measure steel temperature
S7 – 900 mm from the wall on Steel C section to measure steel temperature
S8 – 1200 mm from the wall on Steel C section to measure steel temperature

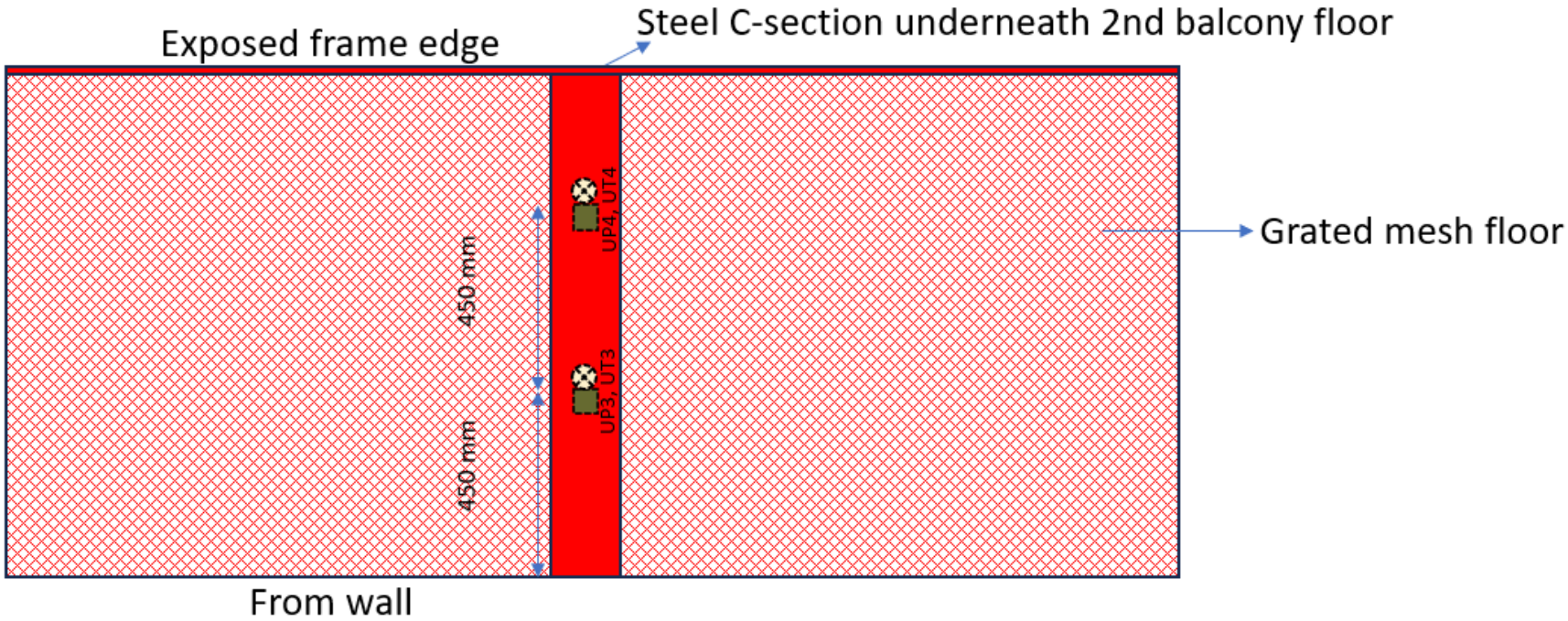
Exposed frame edge
Steel C-section underneath 2nd balcony floor
Grated mesh floor
450 mm
450 mm
UP4, UT4
UP3, UT3
From wall

Figure 1: Elevation view of the system during build.

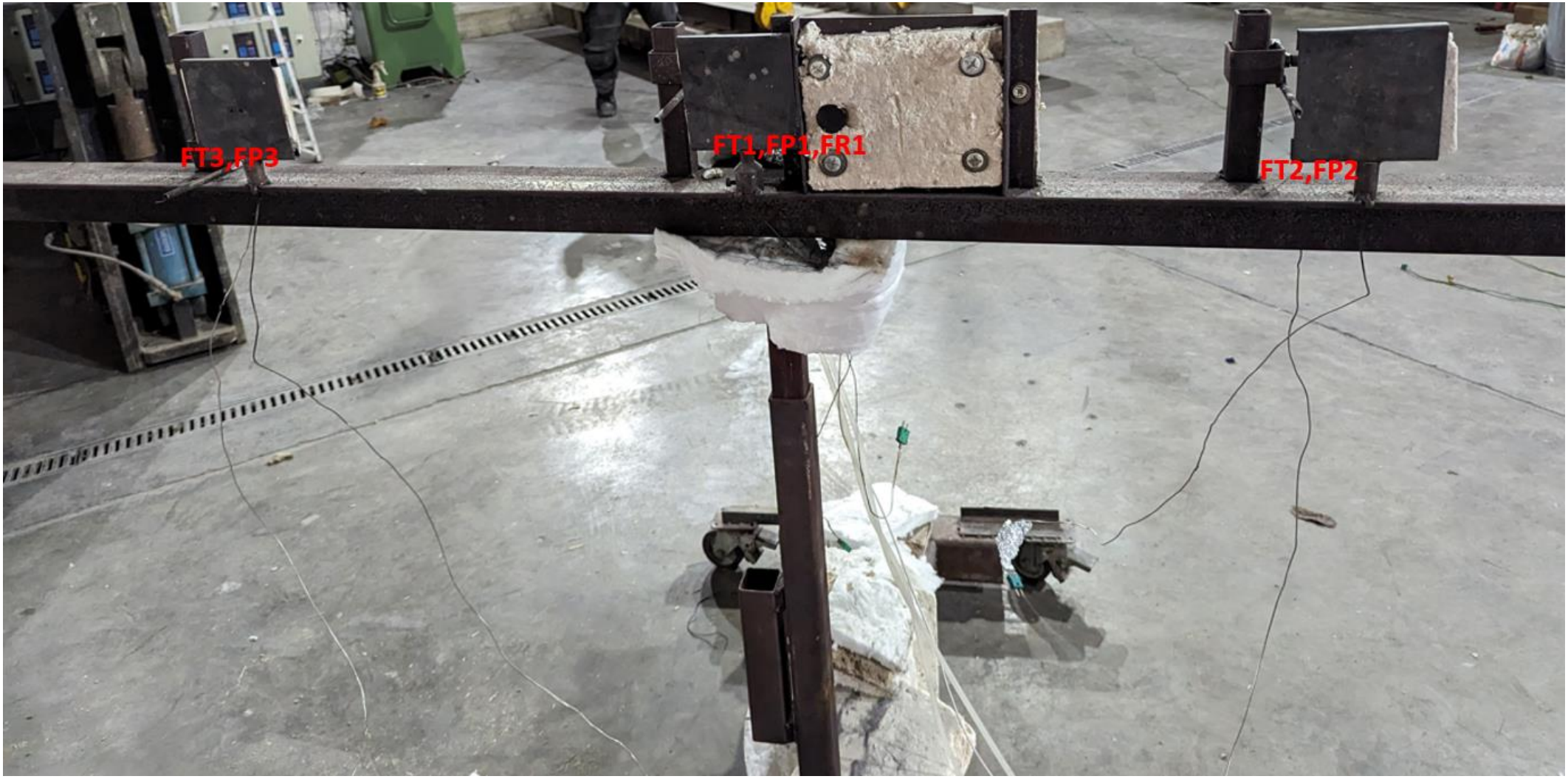

Figure 2: The front facing Fluxmeter, Plate TC's and Inconels (placed 1m away from the target crib hypothetical position).

2. VISUAL OBSERVATIONS DURING THE TEST

Time from ignition (min:sec)	***Observation***
00:00	**Ignition of crib.**
01:20	Flames out of combustion chamber
01:45	Crackling noise noticed from the timber decking on 1st floor.
02:35	Flames emerging through the side face and impinging on 1st floor noticed.
02:51	Flames start to impinge on the 1st floor HPL panels.
03:41	HPL panels on 1st floor starts to deform.
06:03	HPL panels on 1st floor on flames.
06:47	Flame propagation from burning timber and HPL panels on 1st floor starts to impinge on 2nd floor.
08:29	Delamination of the decorative coating of HPL panels installed on 1st floor noticed.
09:30	Timber decking and HPL panels installed on 2nd floor on flames.
10:16	Flames noticed on the ground floor panels.
10:26	Flaming debris noticed.
11:04	Flaming debris
13:53	Ground floor side facing HPL panels on flames.
14:17	Falling debris
16:25	**Test Termination.**

3. DATA RESULTS

Heat Release rate (Hood)

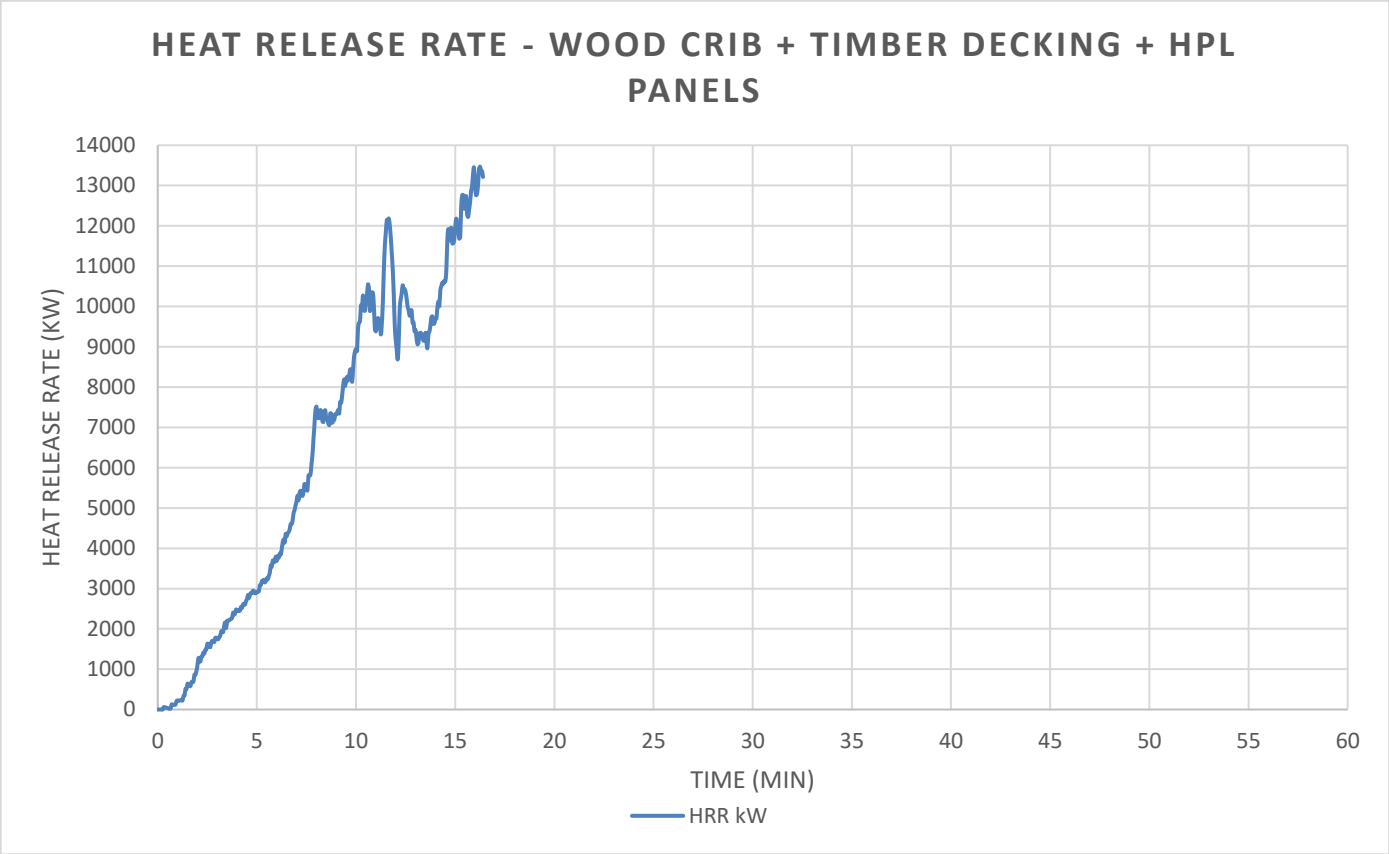

Mass loss

No Mass loss was recorded during this test.

Data measurement at 1m from target crib

Layout

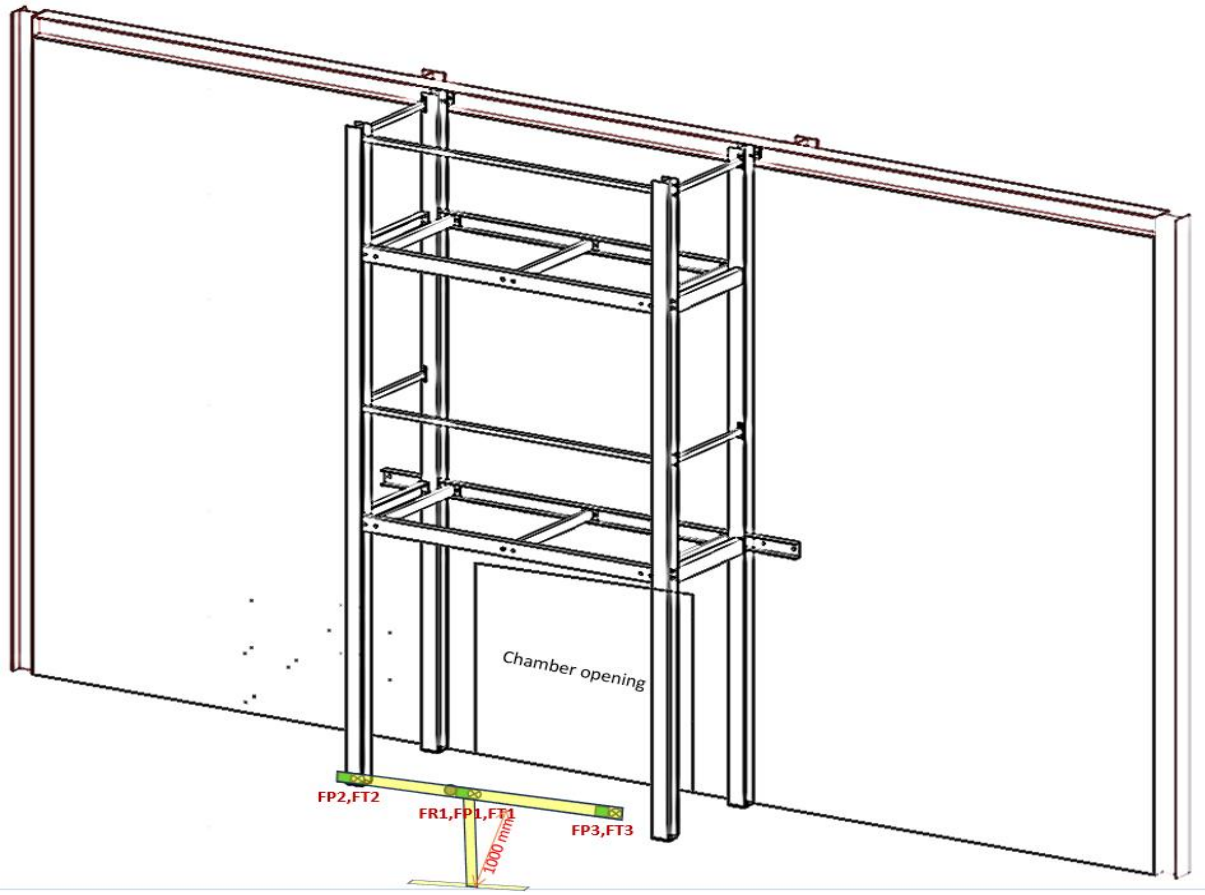

Radiant heat at 1m from target crib

The radiant heat was measured using a water cooled Gardon Guage sensor of range 100 kW/m²:

The heat flux meter was located at 1000 mm from the target crib hypothetical position at mid-height of the wood crib.

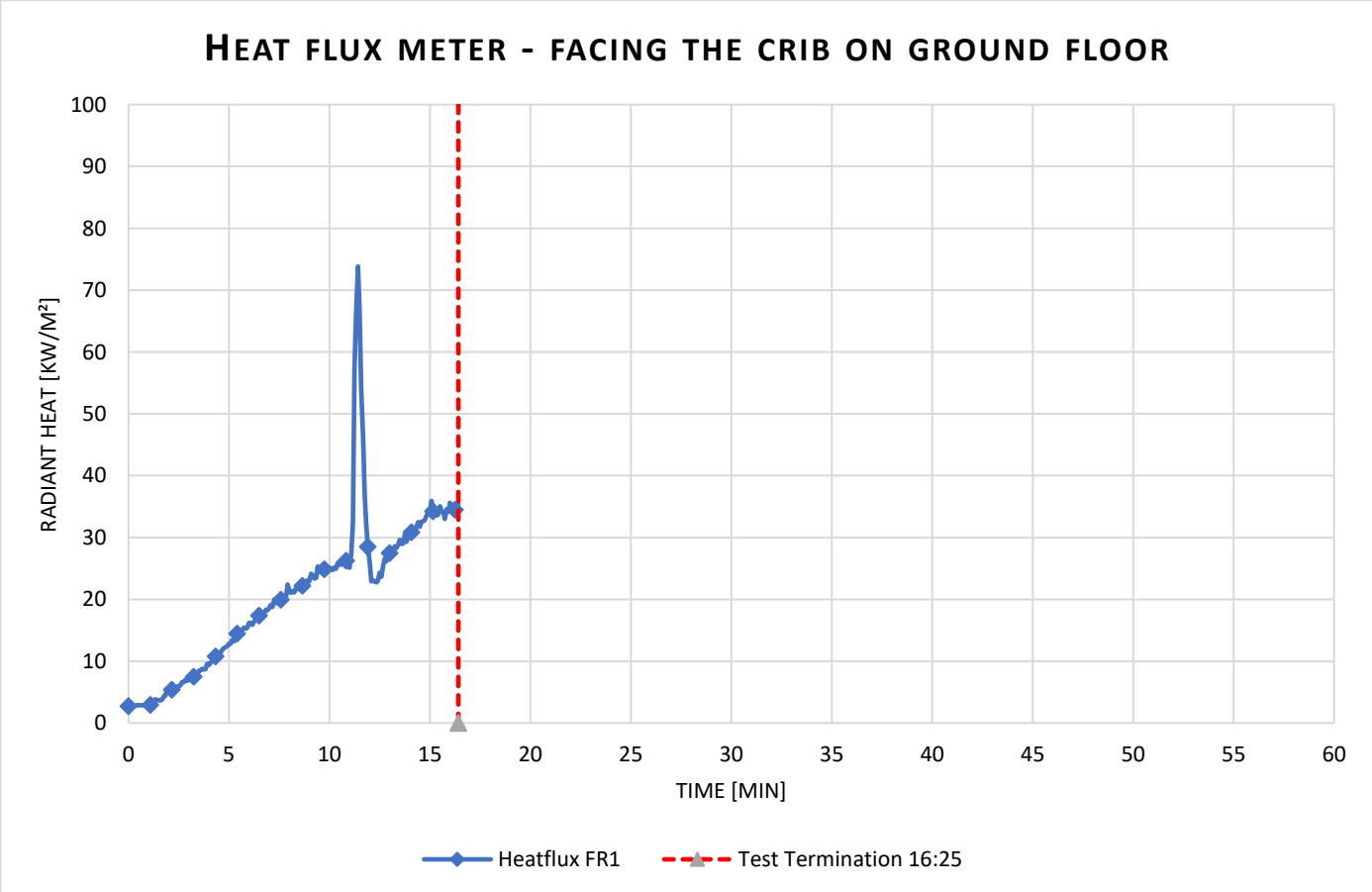

Temperature measured by plate TC's at 1m away from target crib

Ø 1.5 mm mineral insulated thermocouples were placed 1m from the target crib at mid height of wood crib spaced by 500 mm from the centre point ofthe crib. The installation included 3x Inconel thermocouple and 3x plate thermocouples.

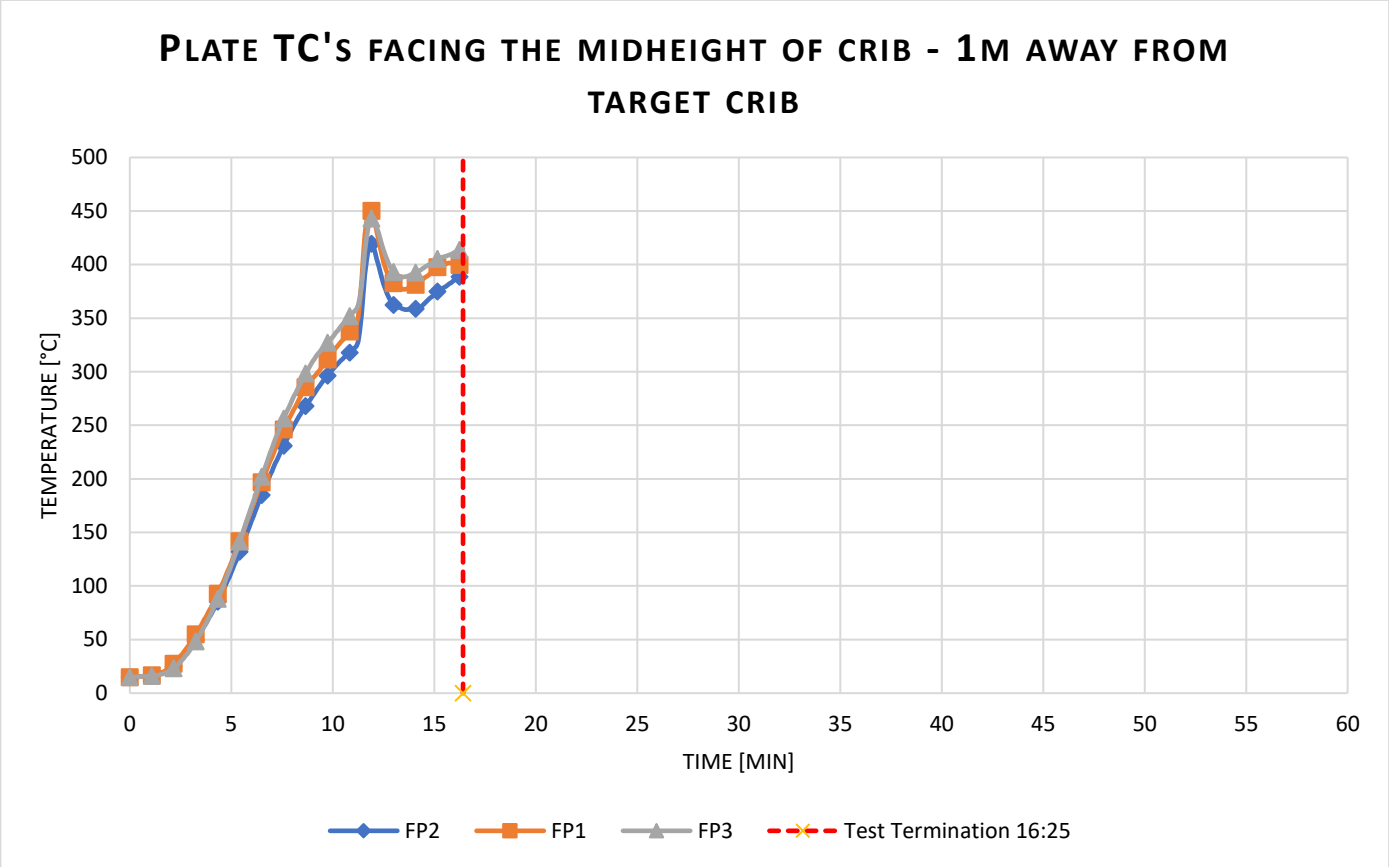

Temperature measured by Inconels at 1m away from crib

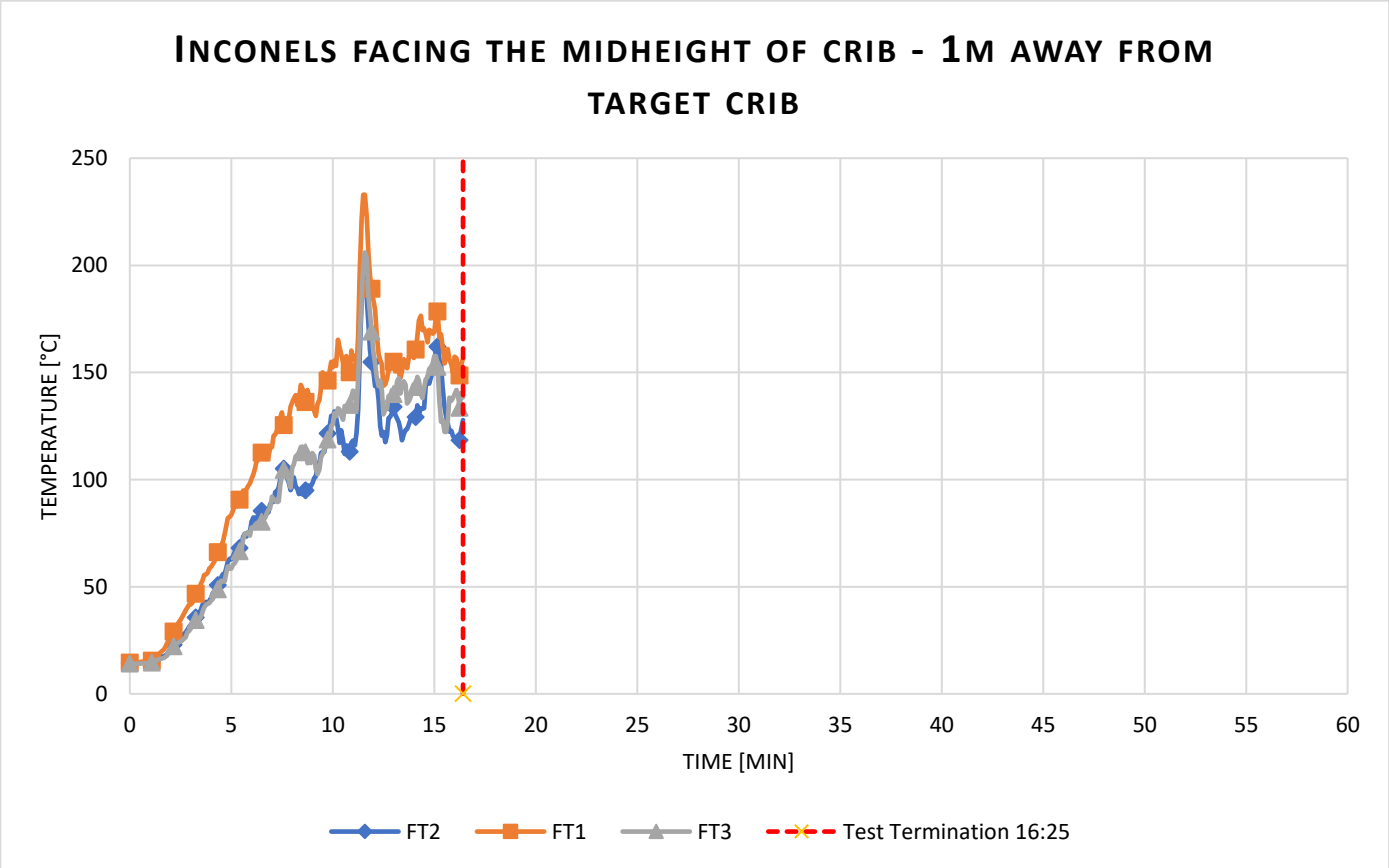

Radiant heat calculated from Plate TC

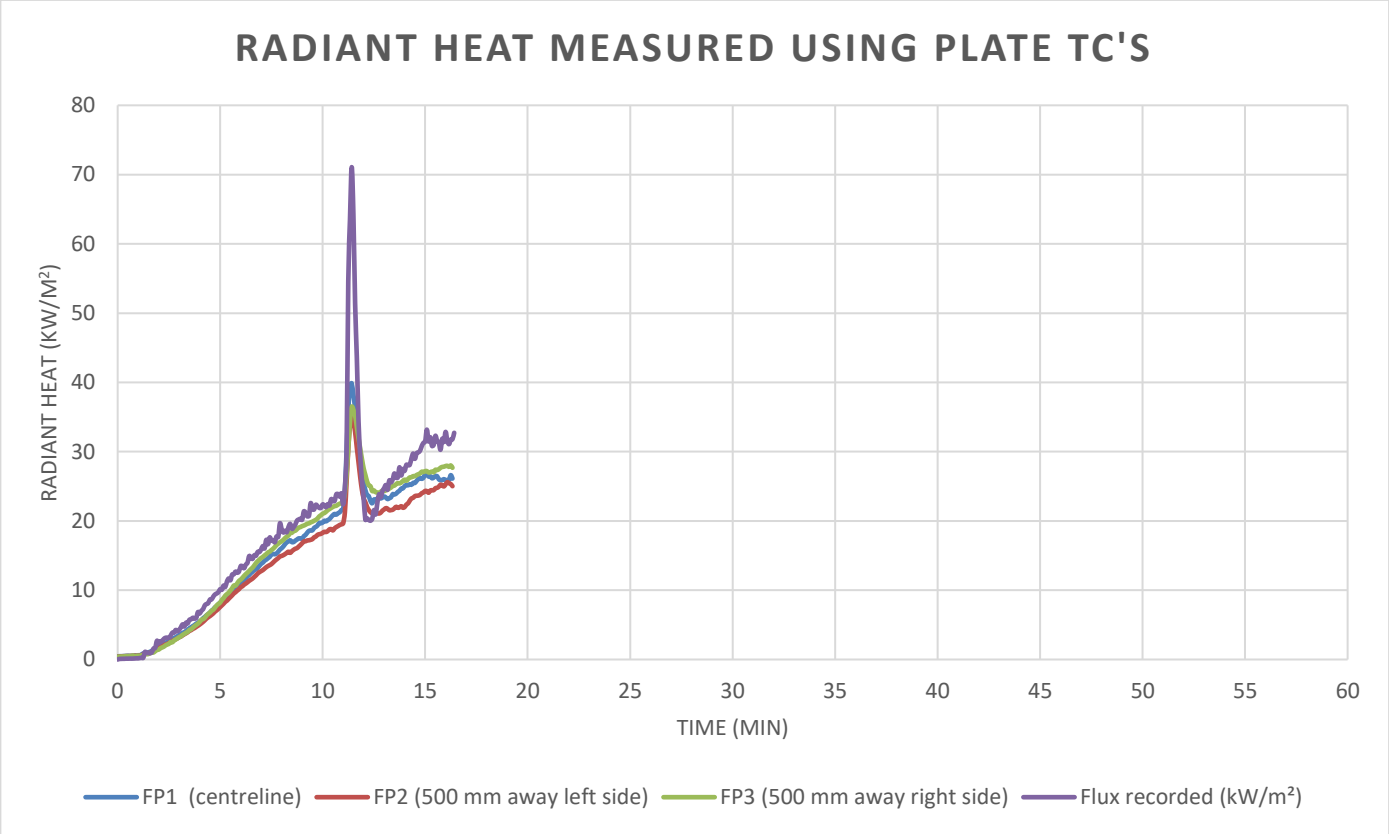

Data measurement from side edges on Ground Floor (660 mm from wall).

Layout

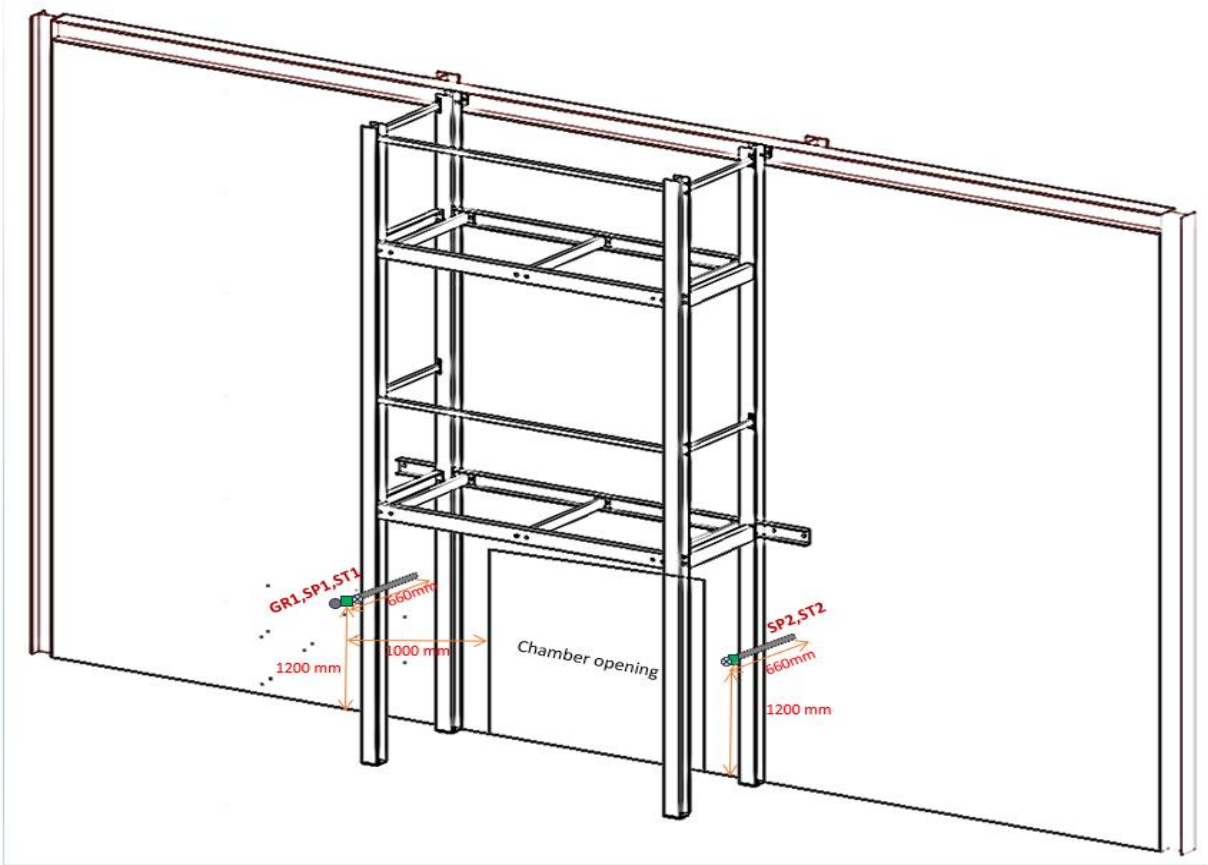

Radiant heat from the flux meter on side edge (660 mm from wall)

The radiant heat was measured using a water cooled Gardon Guage sensor of range 100 kW/m²:

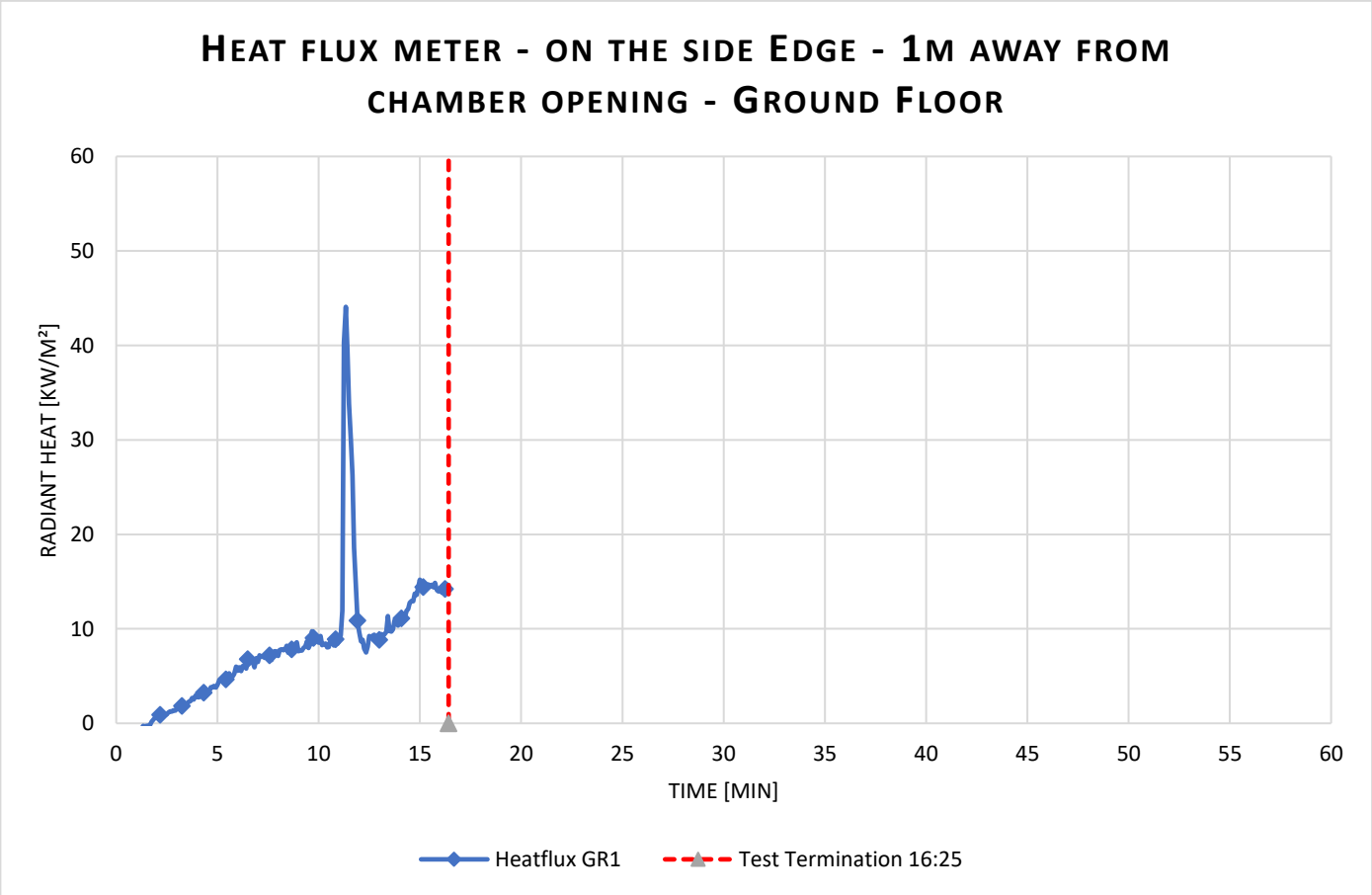

Temperature measured using plate TC's on the side edge

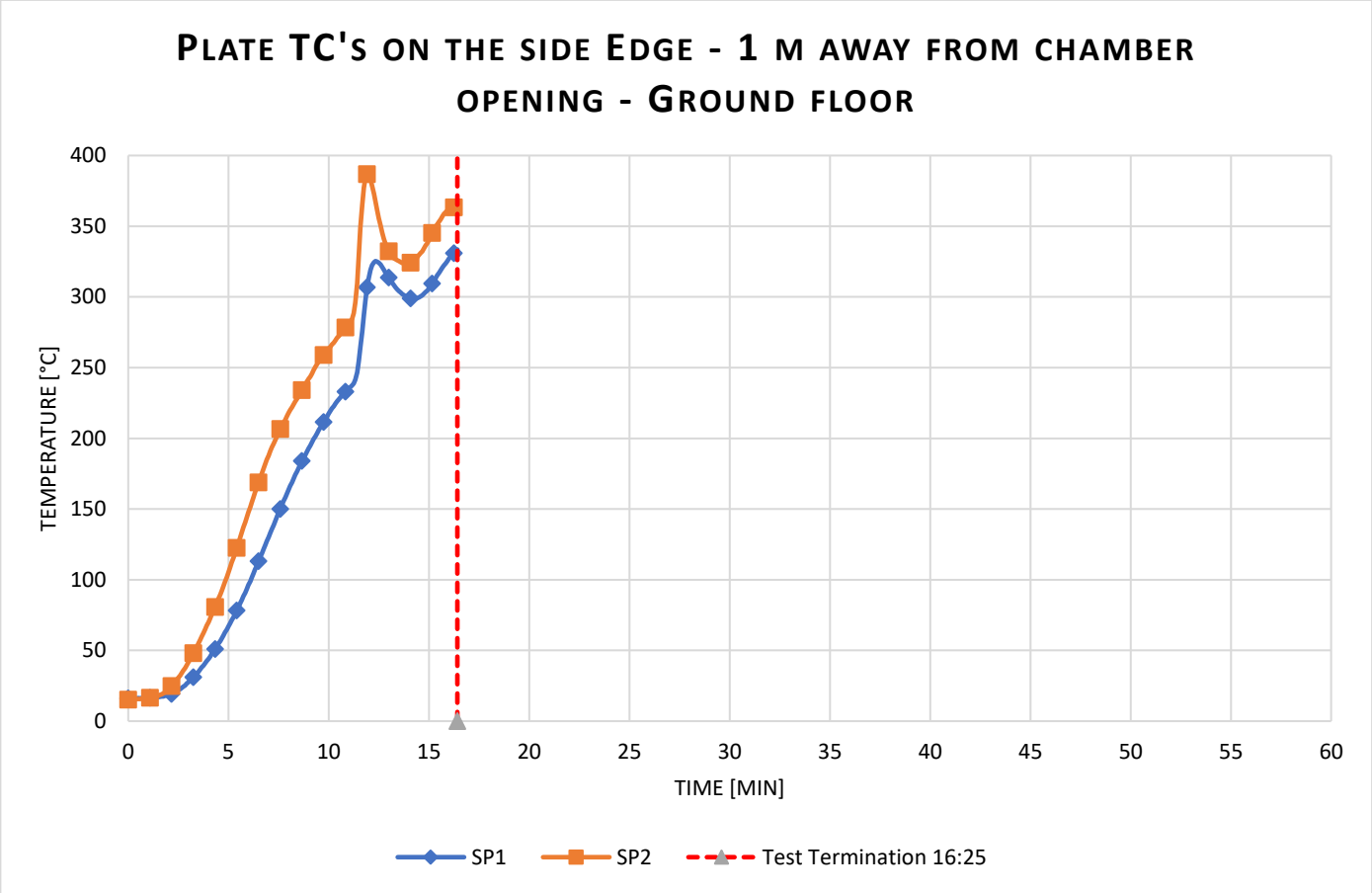

Temperature measured using Inconels on the side edge

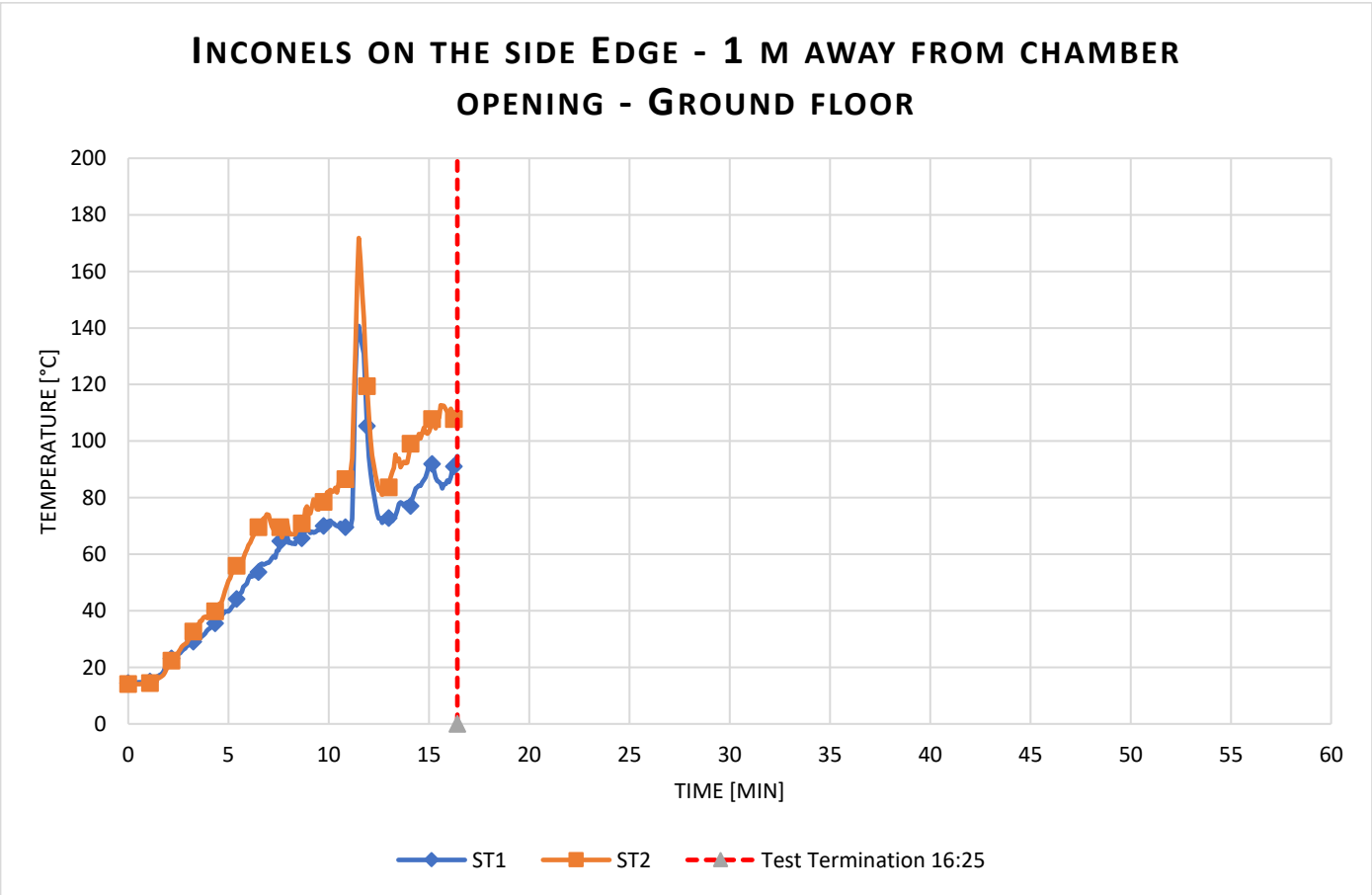

Radiant heat calculated from Plate TC

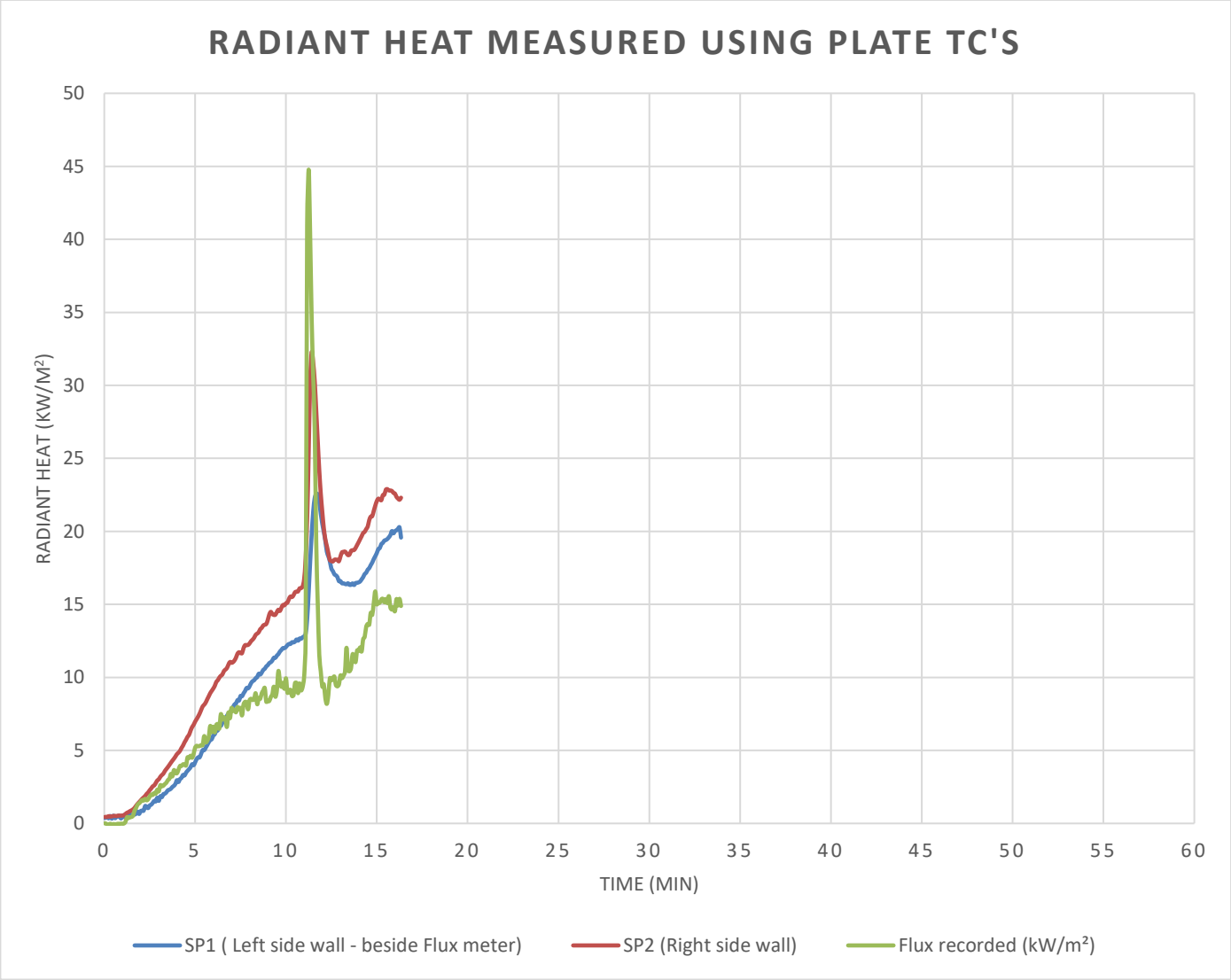

Data measurement from side edges on 1st Floor (660 mm from wall).

Layout

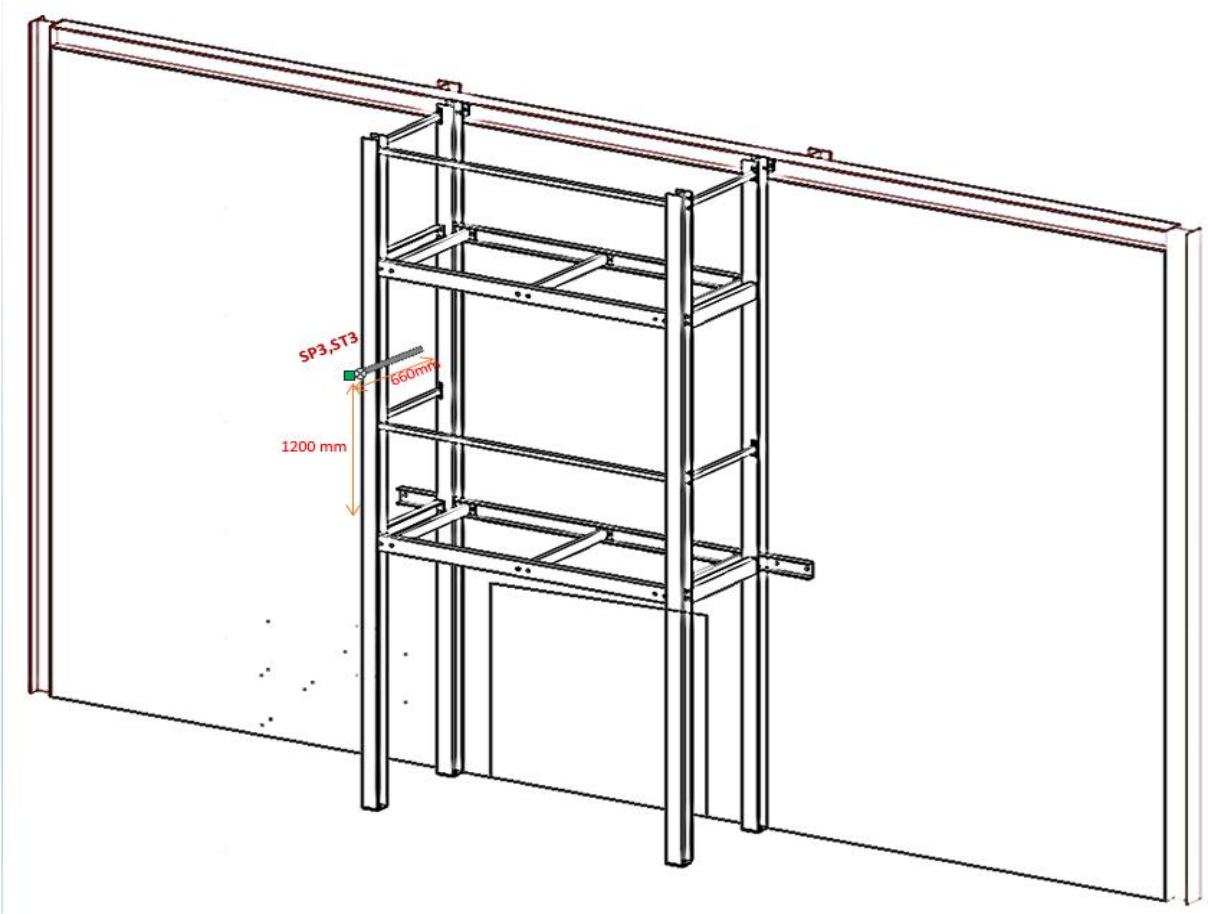

Temperature measured using plate TC on the side edge – 1st floor

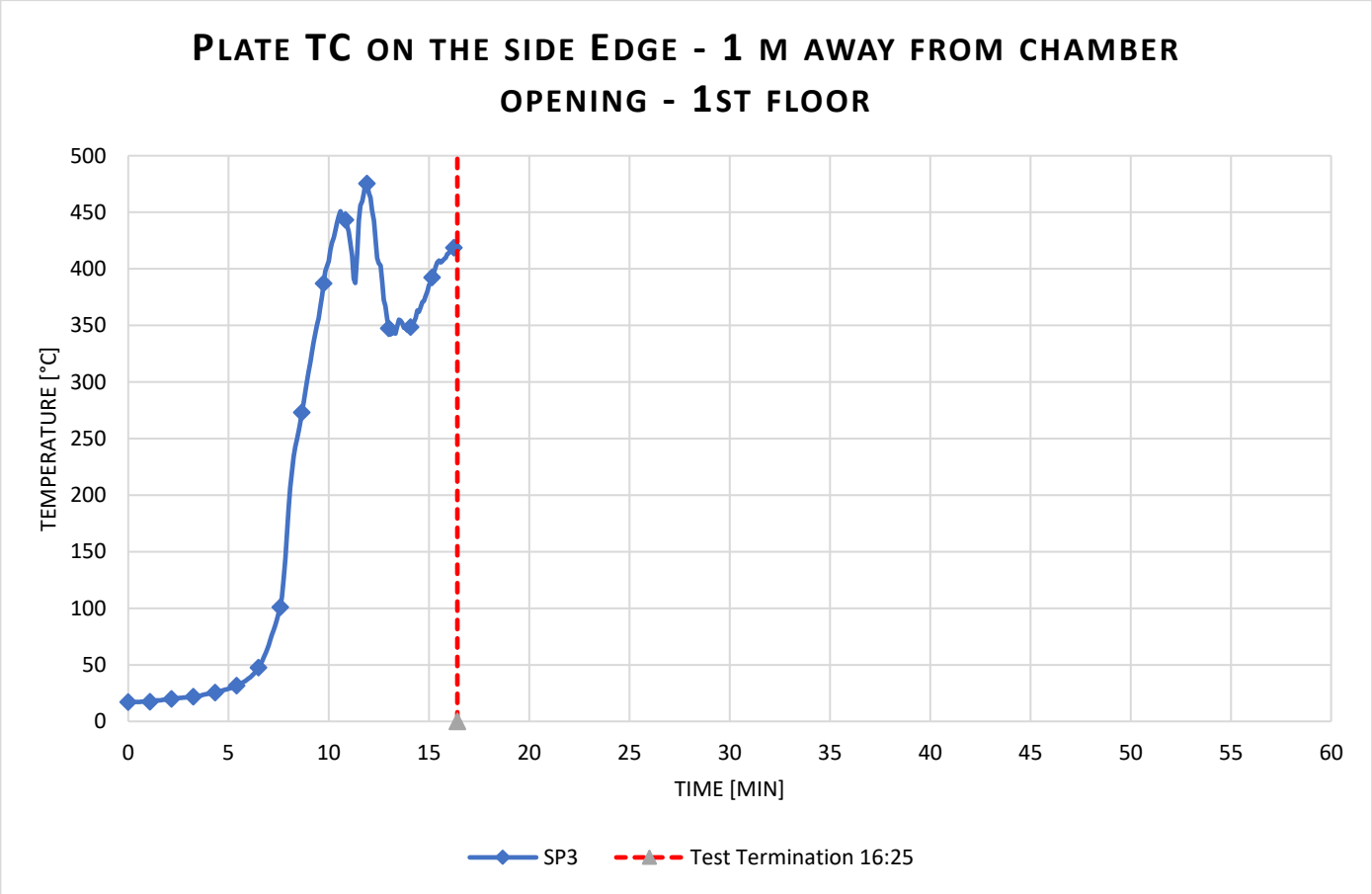

Temperature measured using Inconel on the side edge – 1st floor

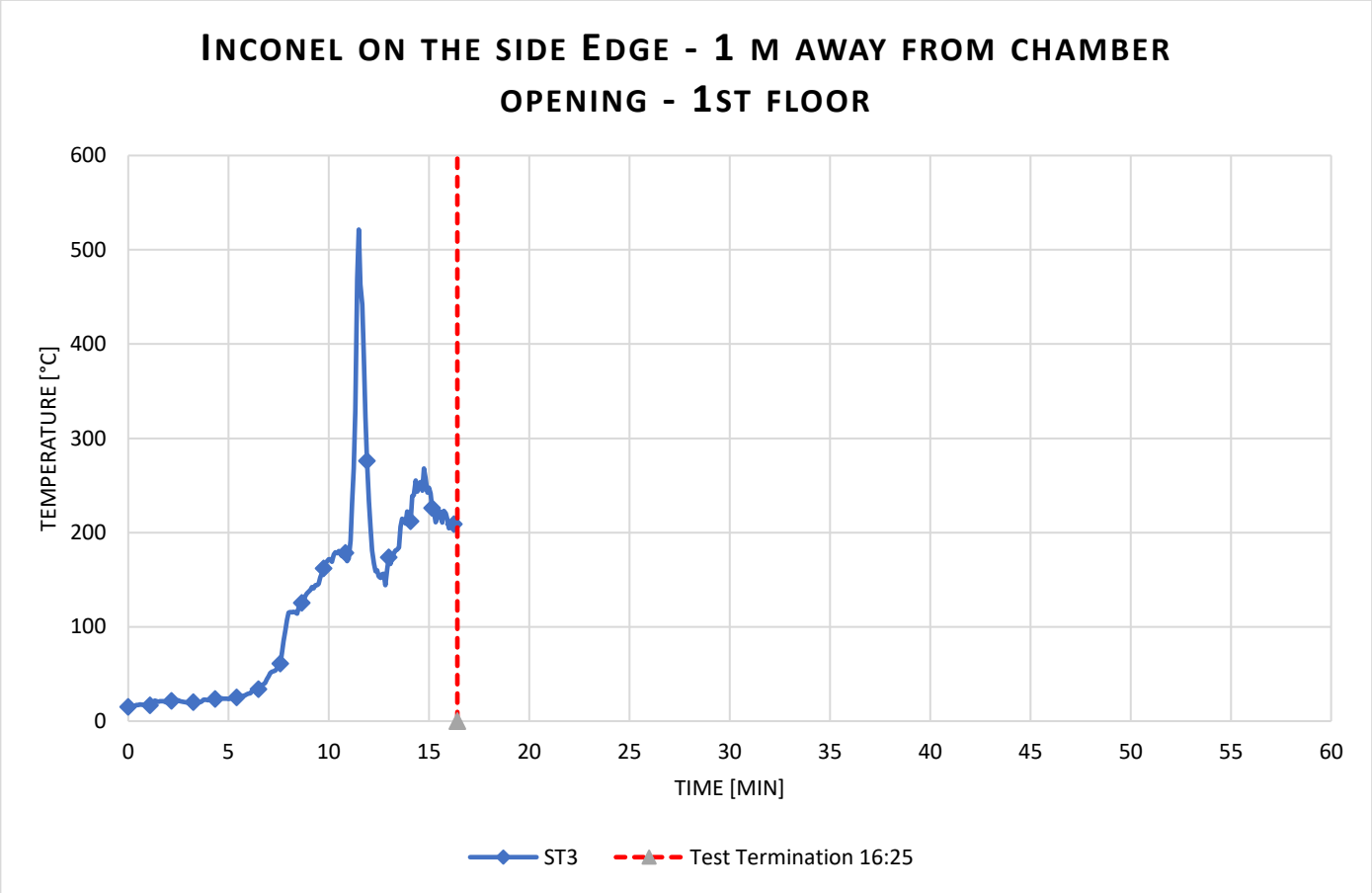

Radiant heat calculated from Plate TC

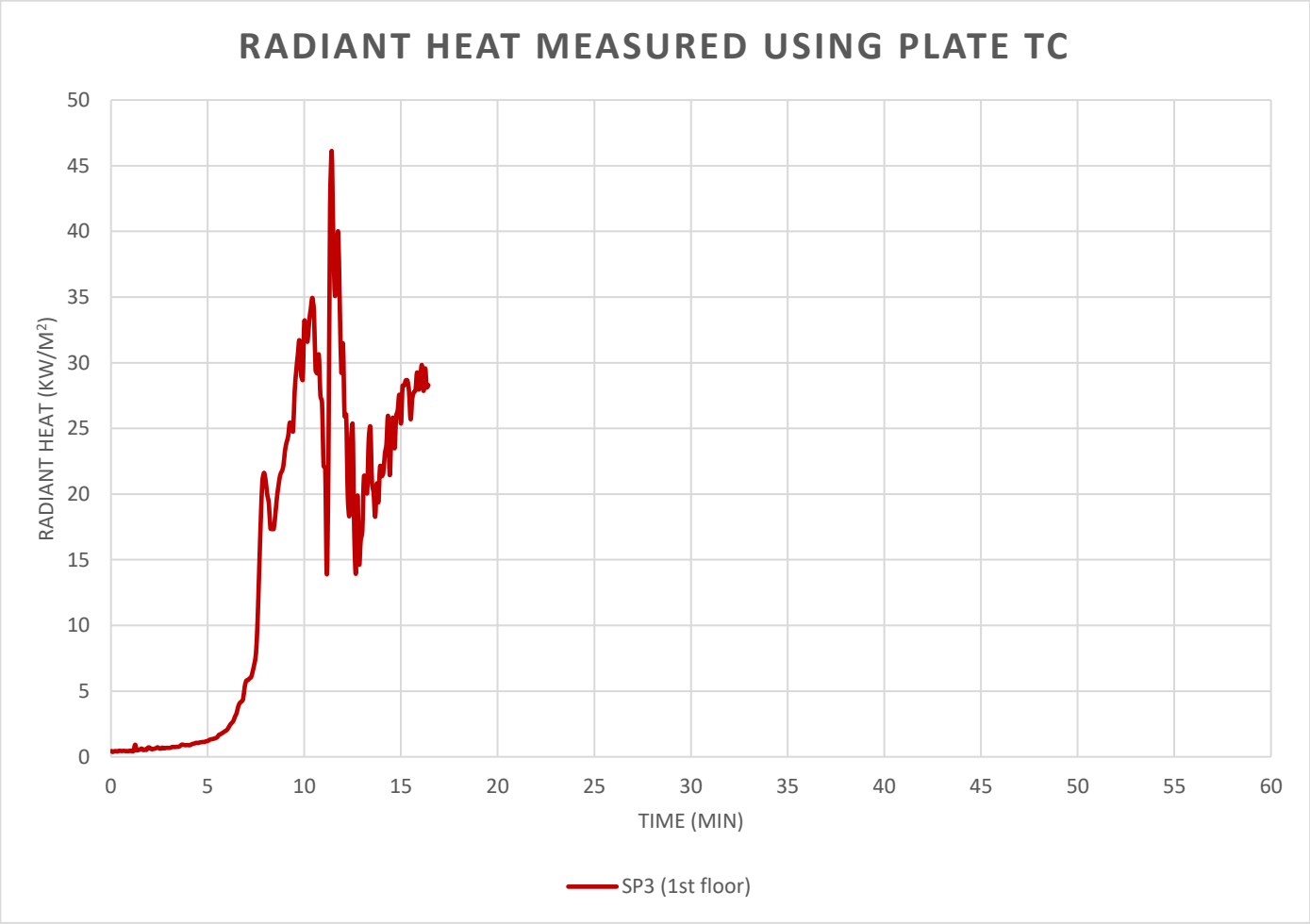

Data measurement from side edges on 2nd Floor (660 mm from wall).

Layout

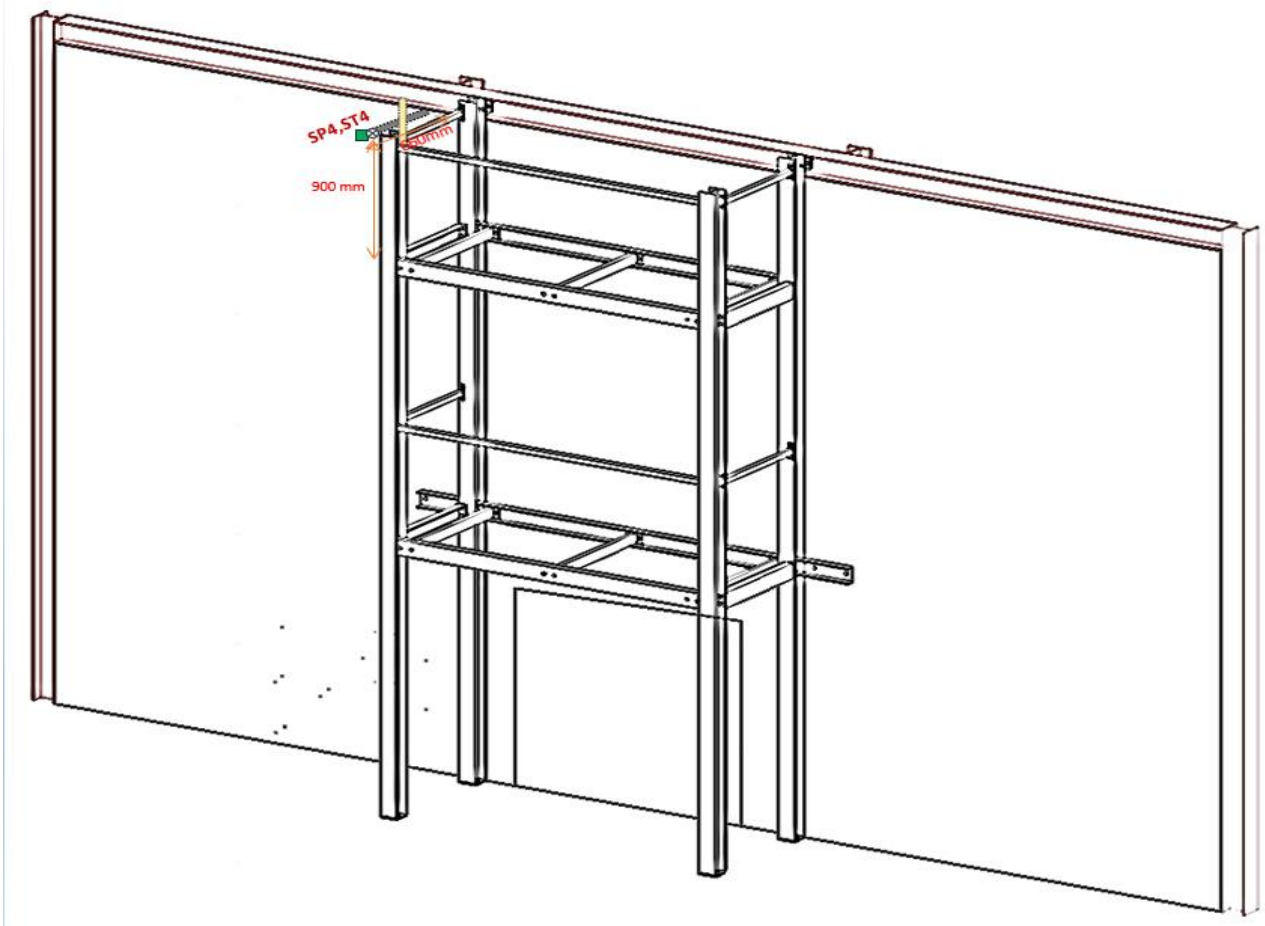

Temperature measured using plate TC's on the side edge – 2nd floor

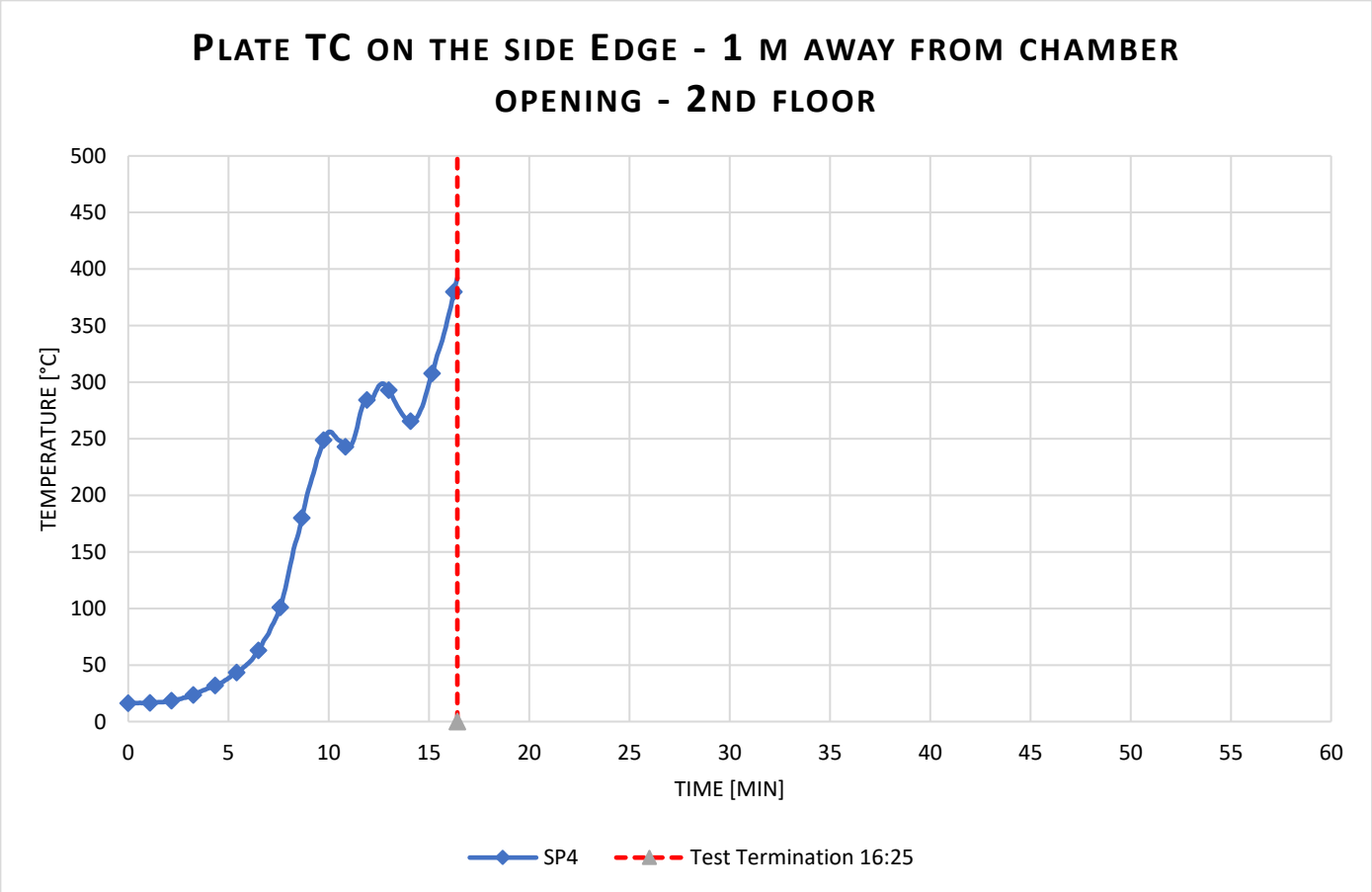

Temperature measured using Inconels on the side edge – 2nd floor

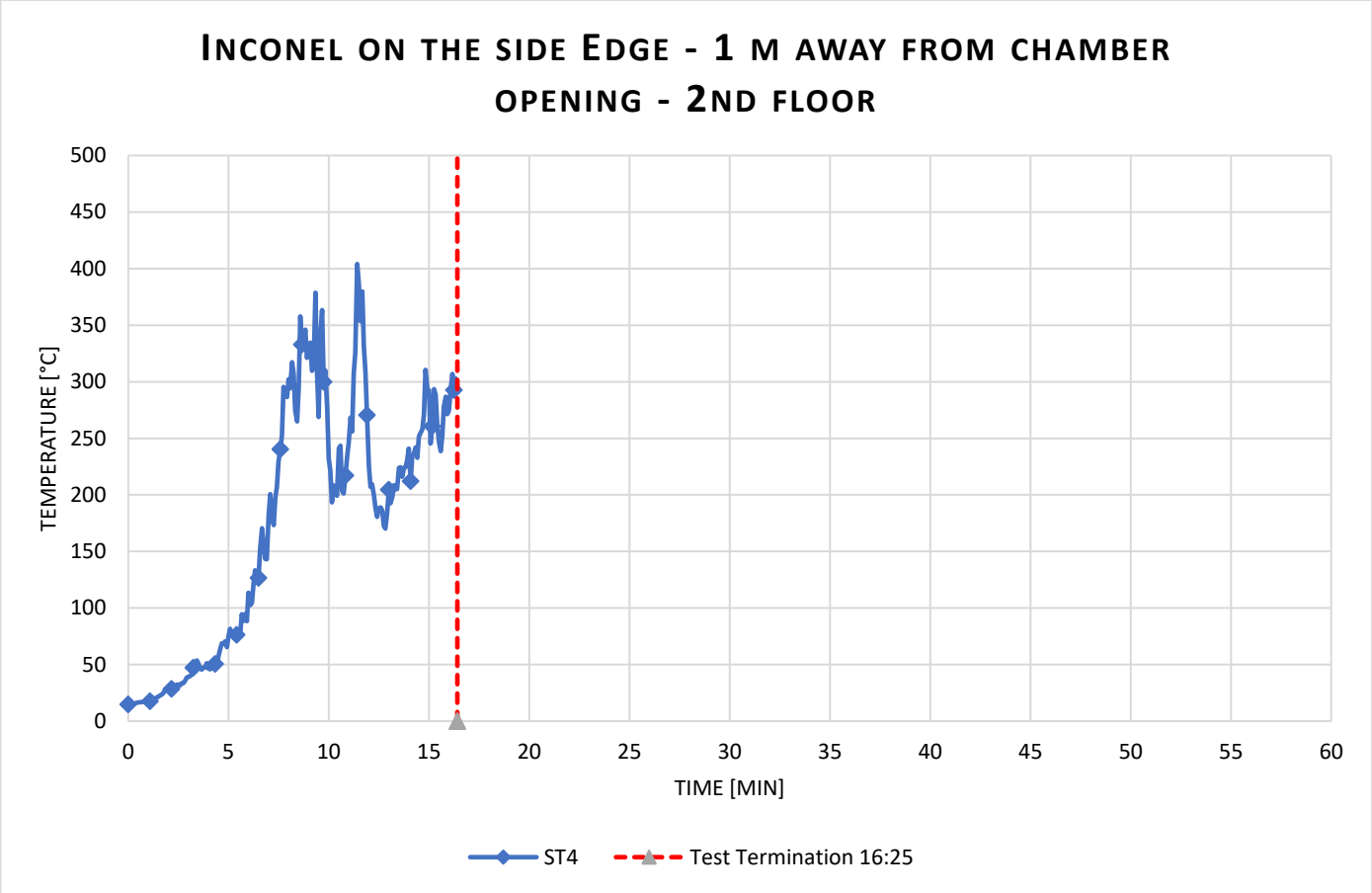

Radiant heat calculated from Plate TC

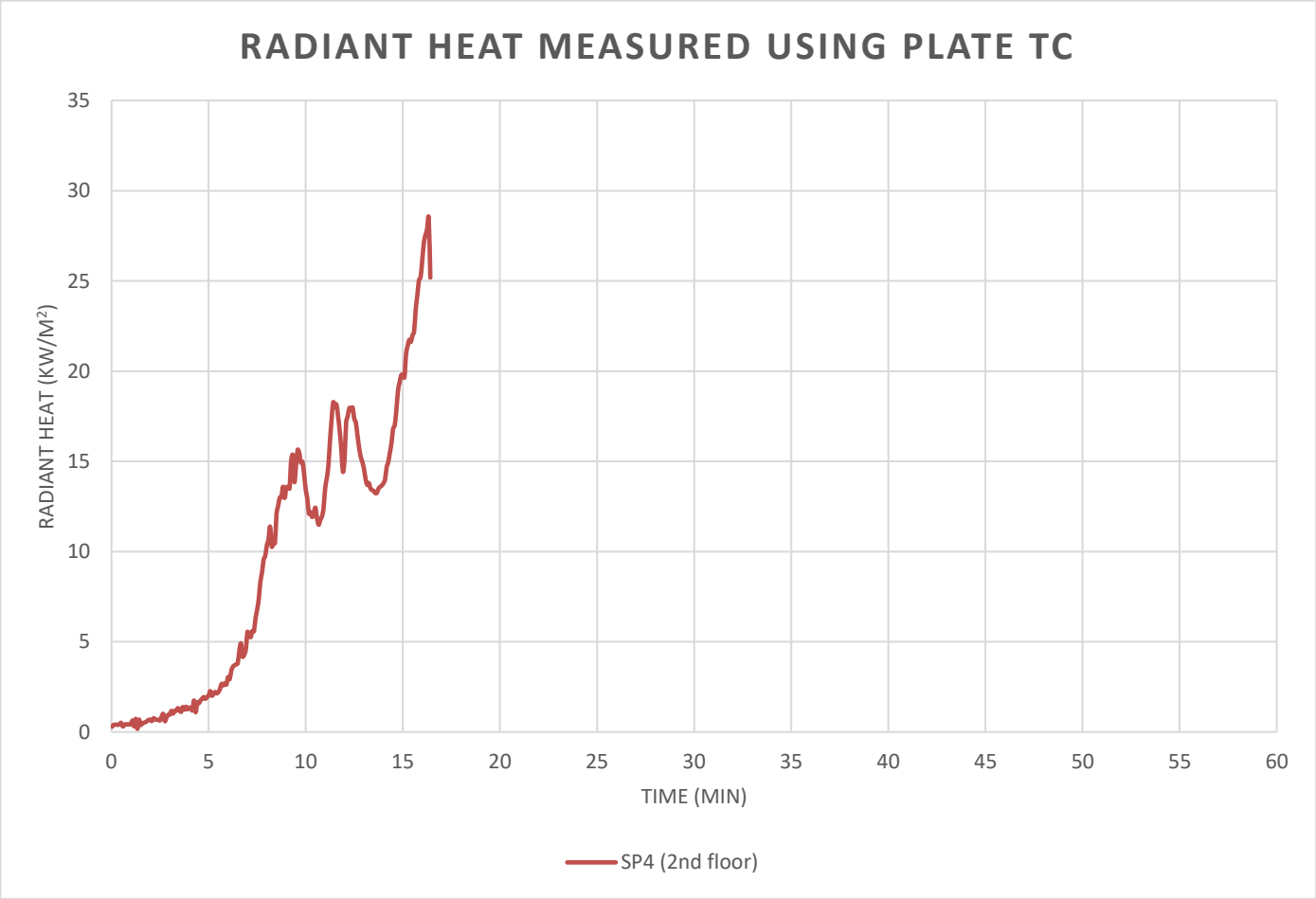

Data measurement from 1st floor wall.

Layout

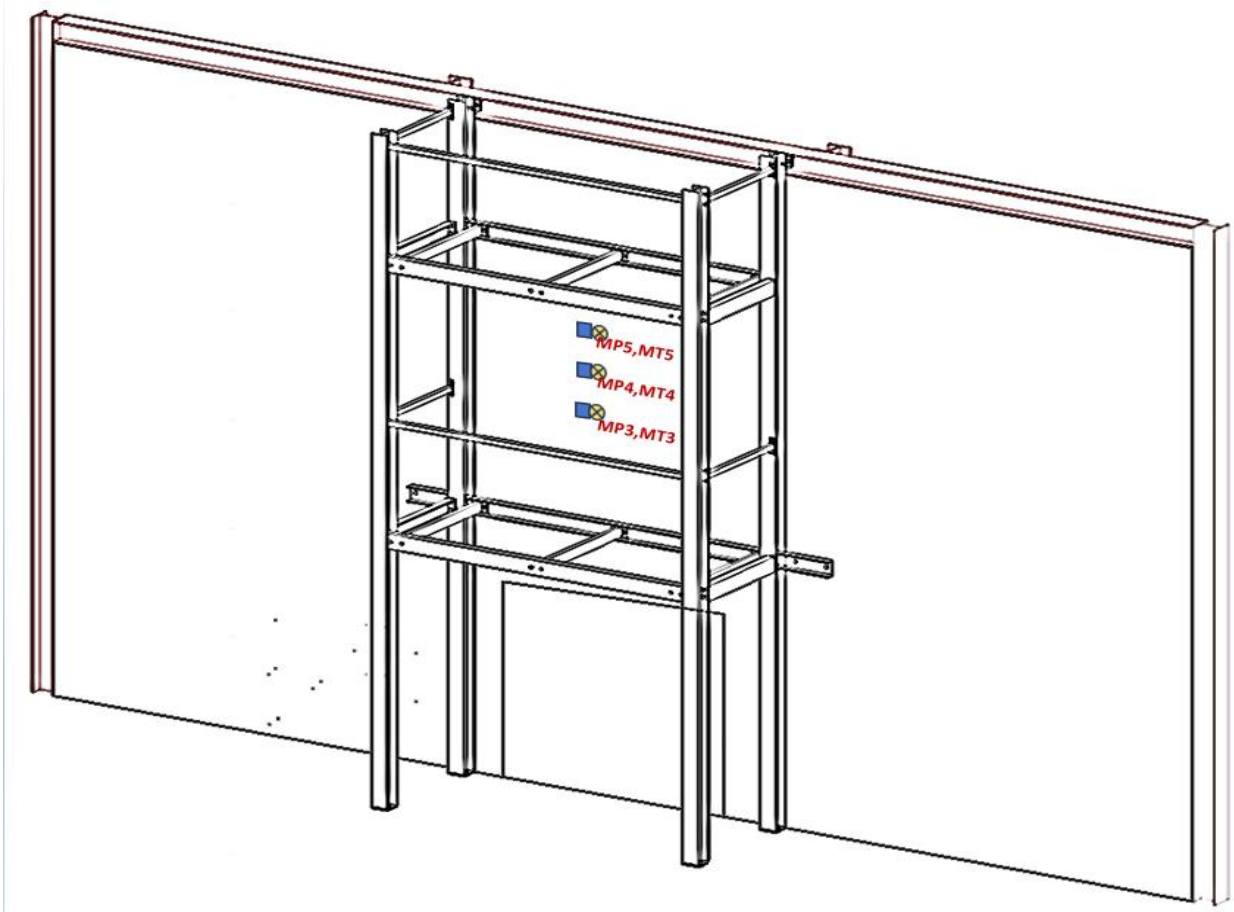

Temperature measured from the Plate TC's on wall at 1st floor

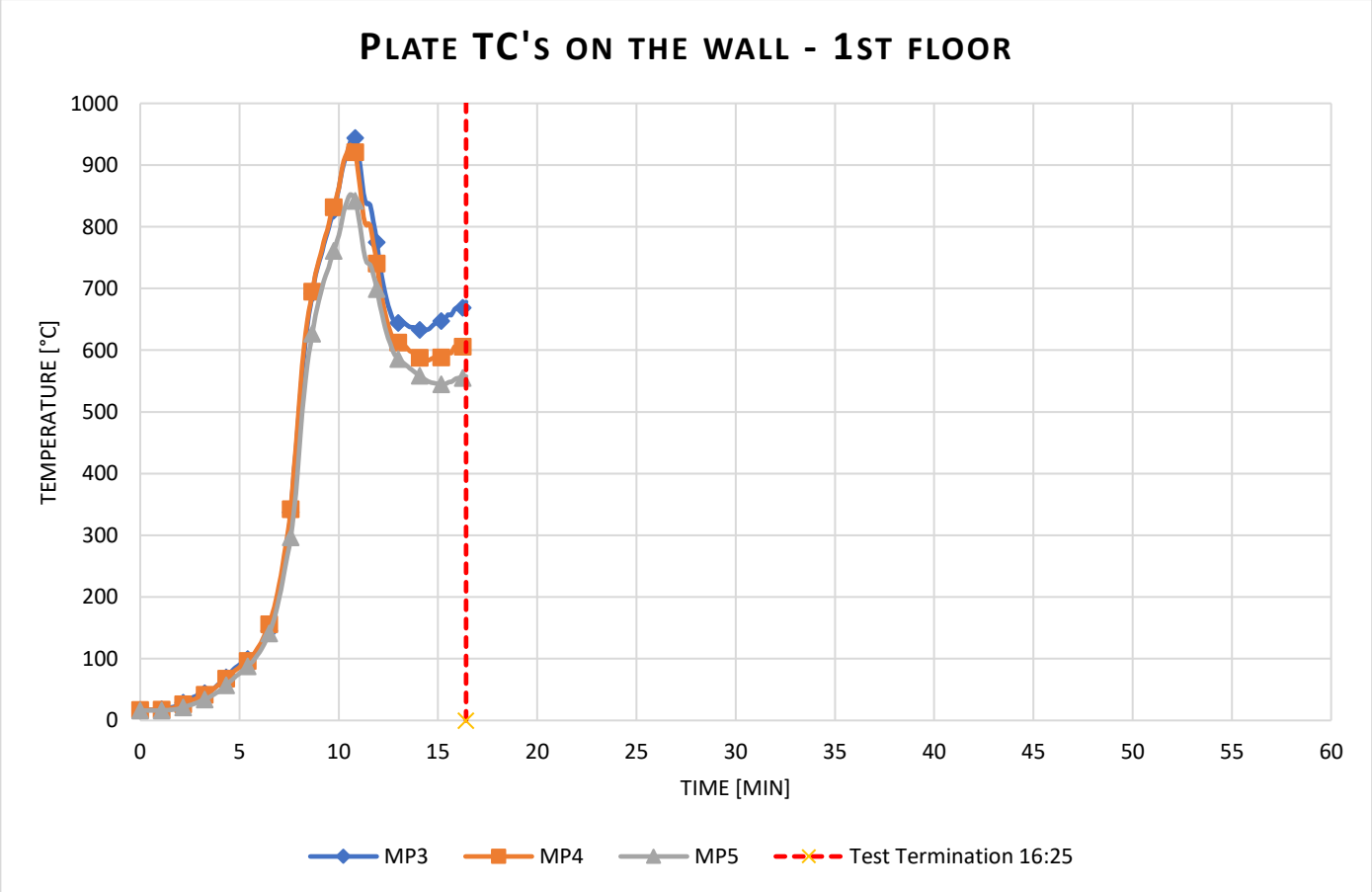

Temperature measured from the Inconels on wall at 1st floor

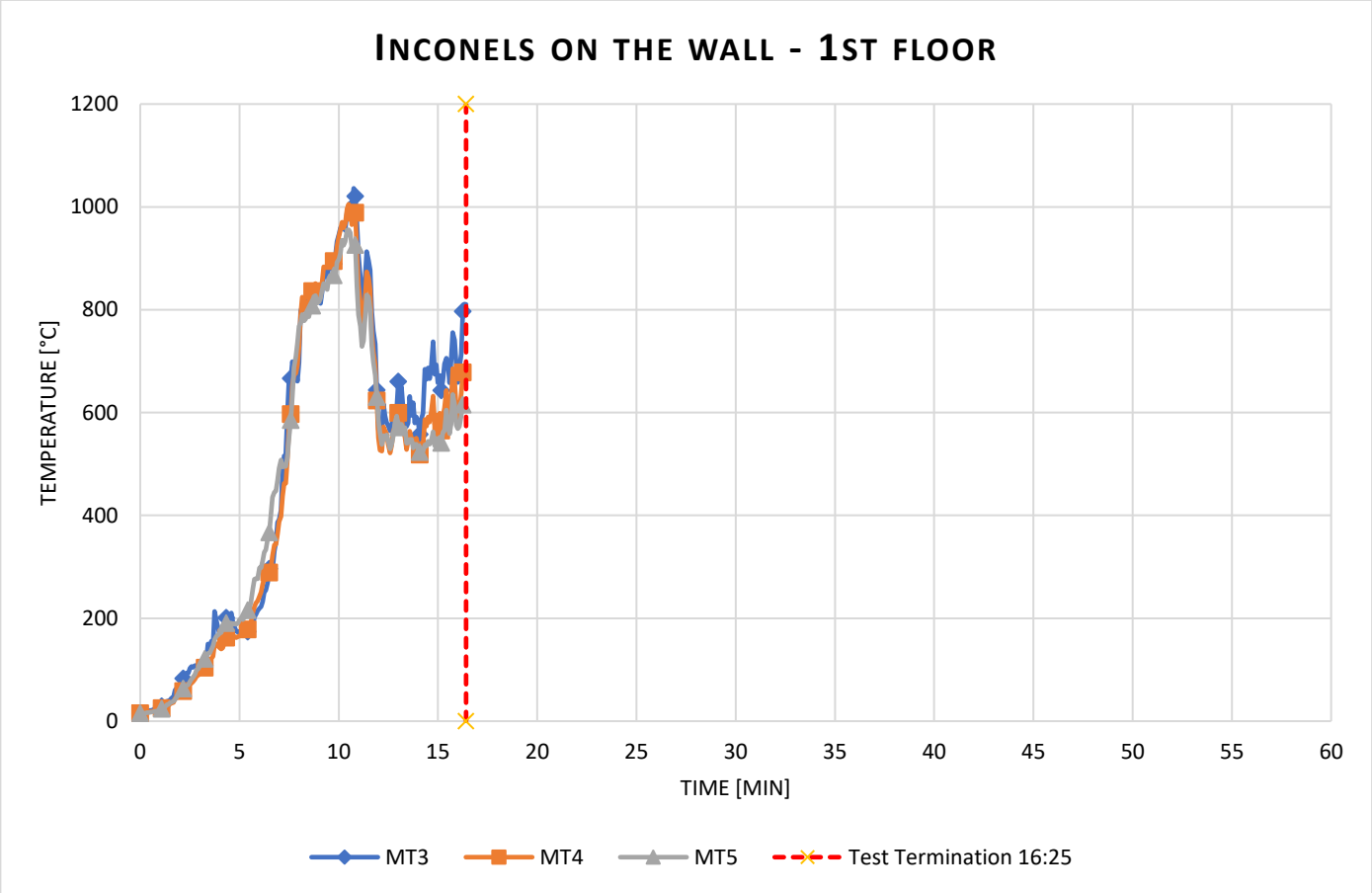

Radiant heat calculated from Plate TC

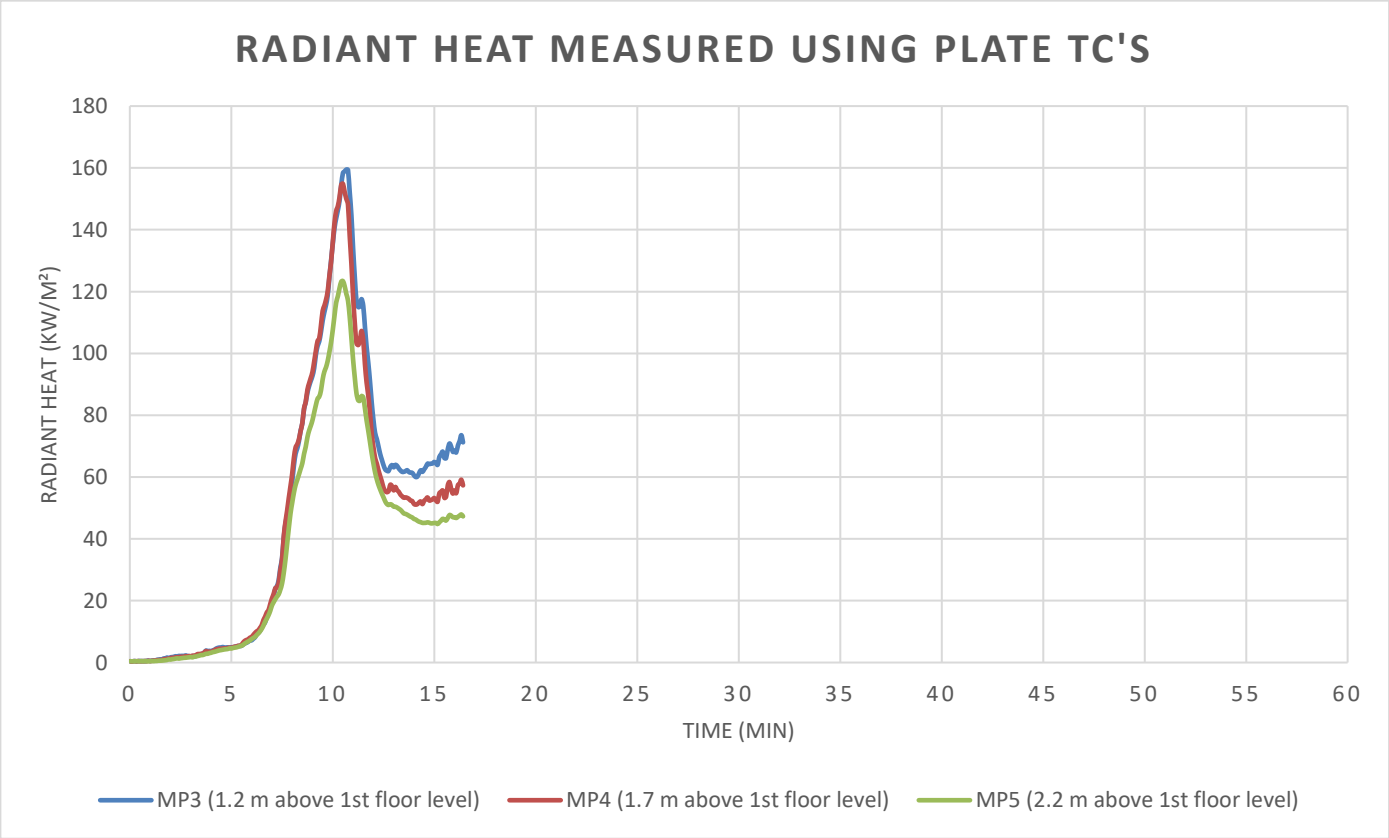

Data measurement from 2nd floor wall.

Layout

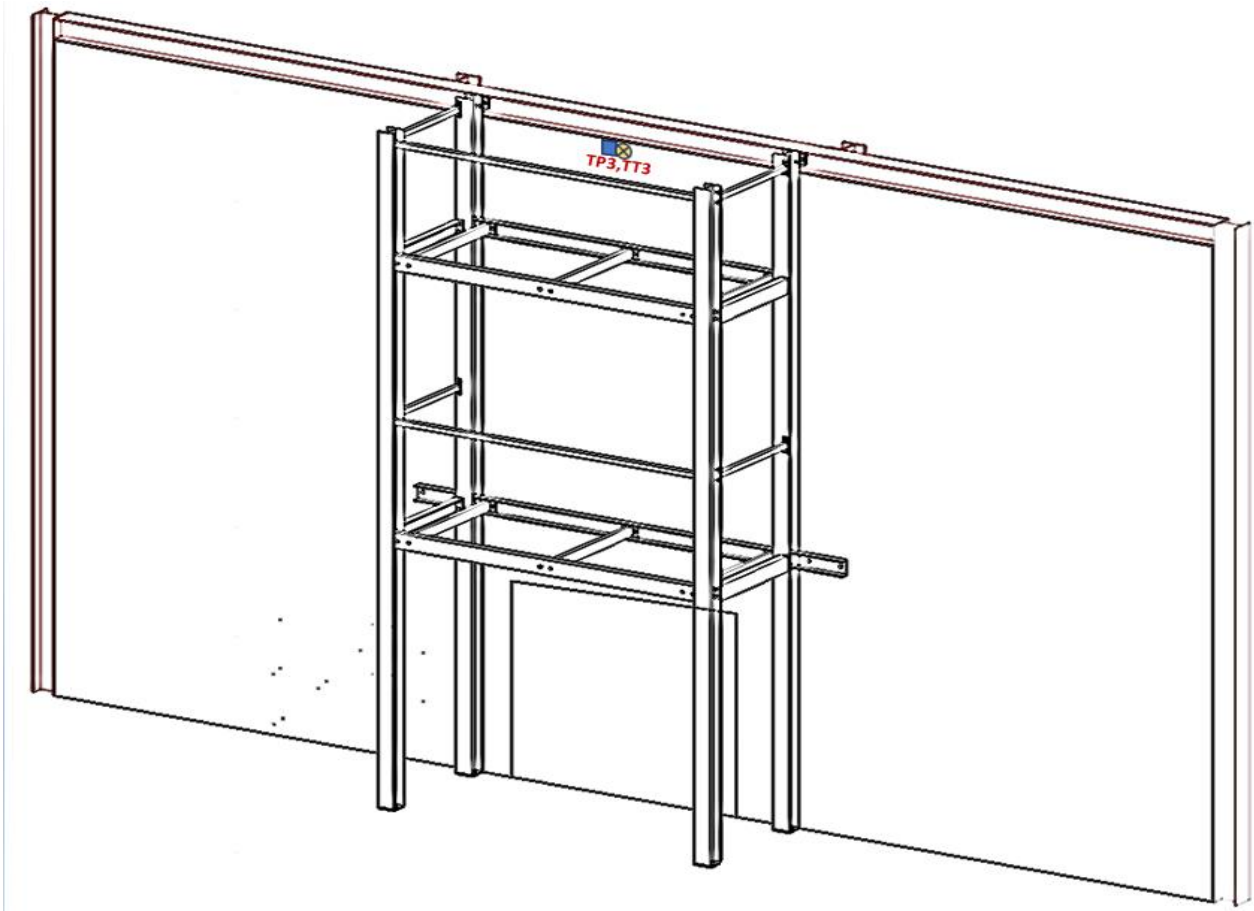

Temperature measured from Plate TC on the wall at 2nd floor

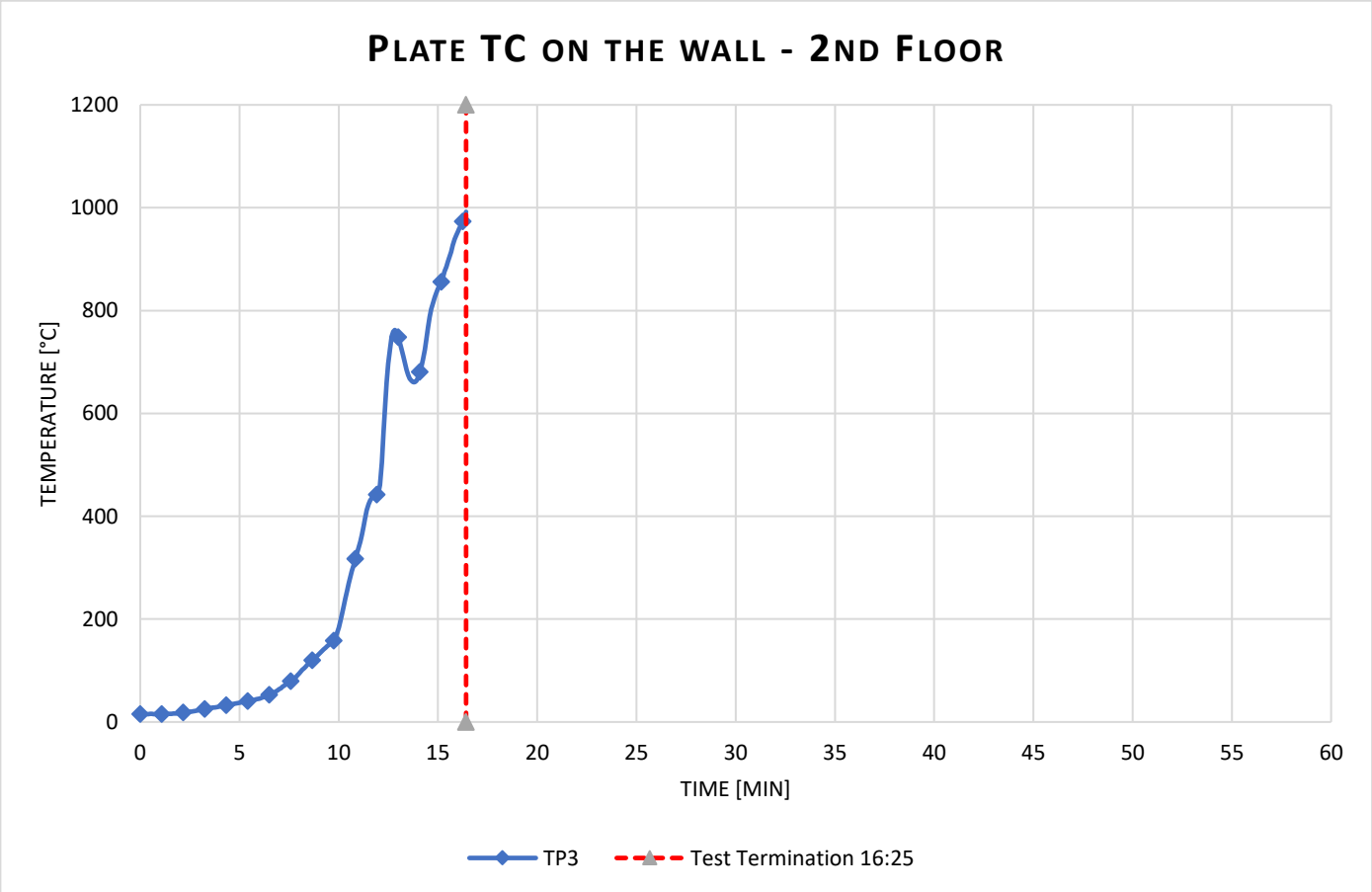

Temperature measured from Inconel on the wall at 2nd floor

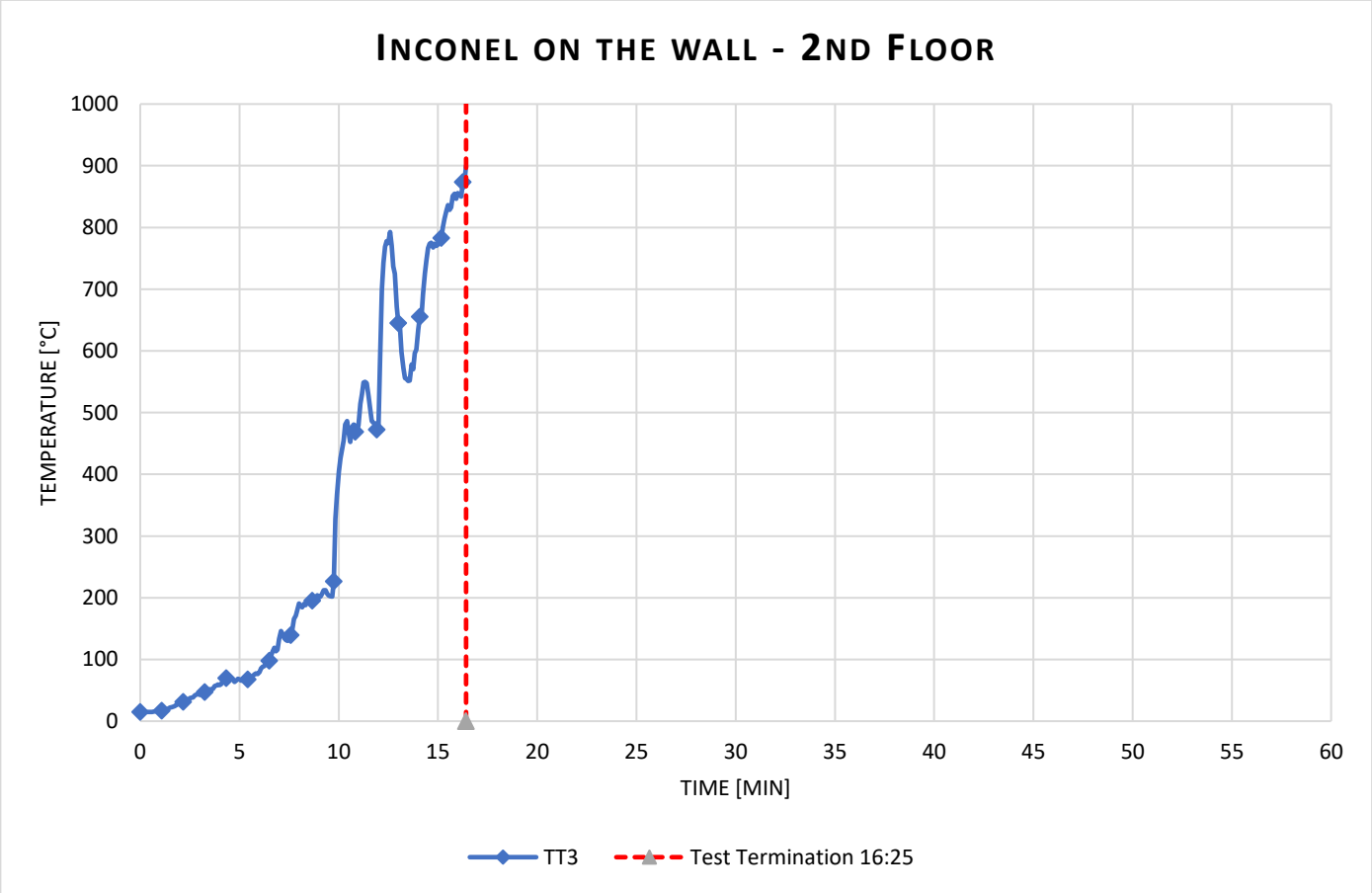

Radiant heat calculated from Plate TC

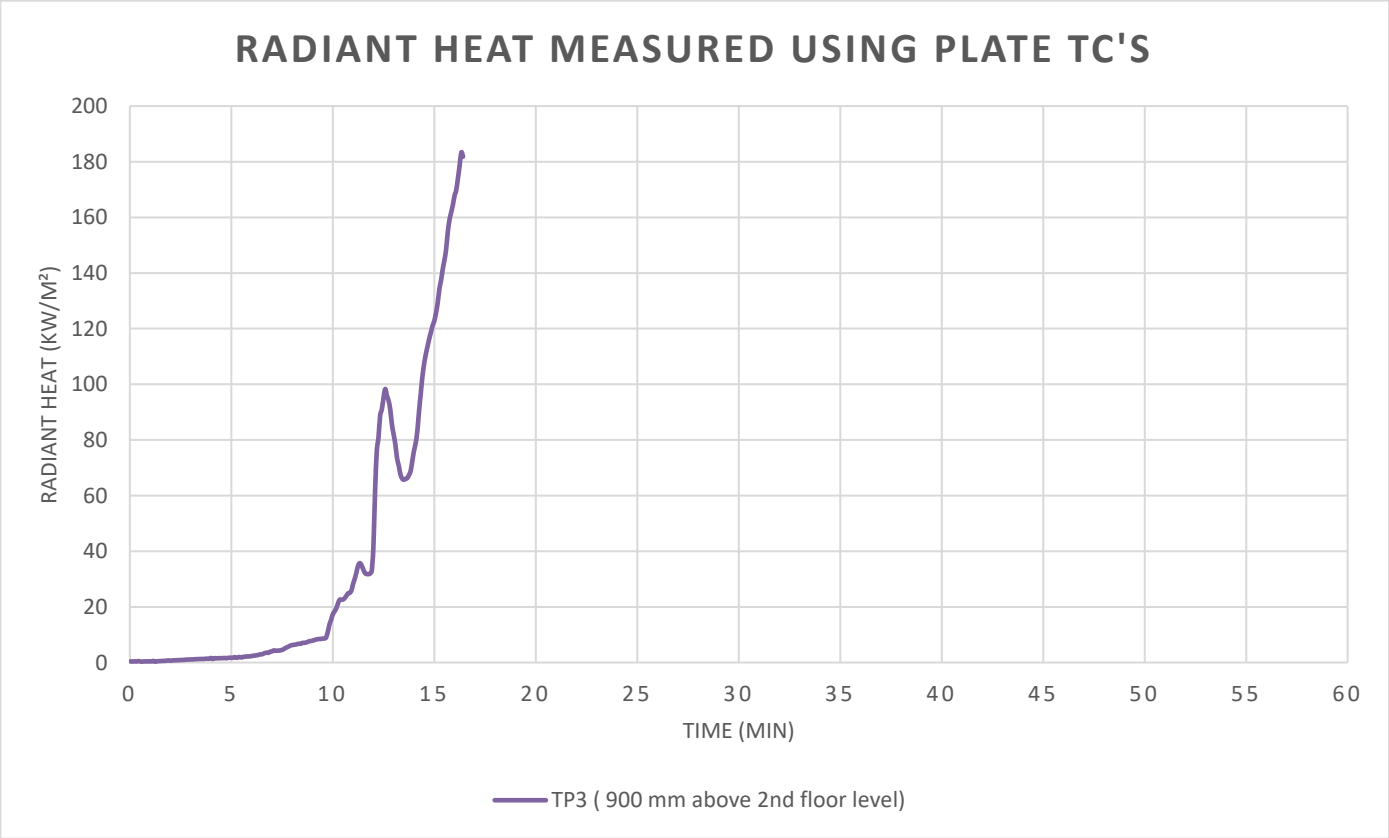

Data measurement from 1st floor exposed edge.

Layout

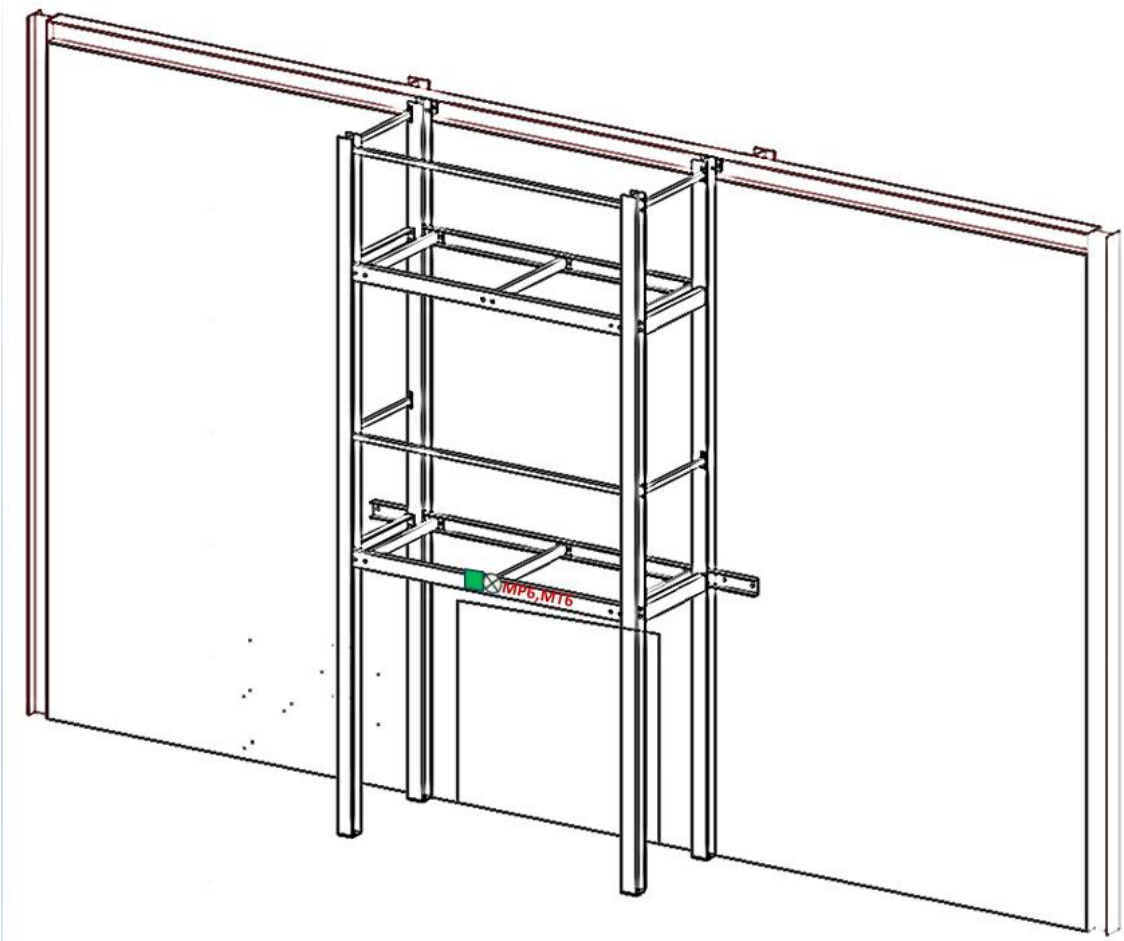

Temperature measured using plate TC 1st floor exposed edge

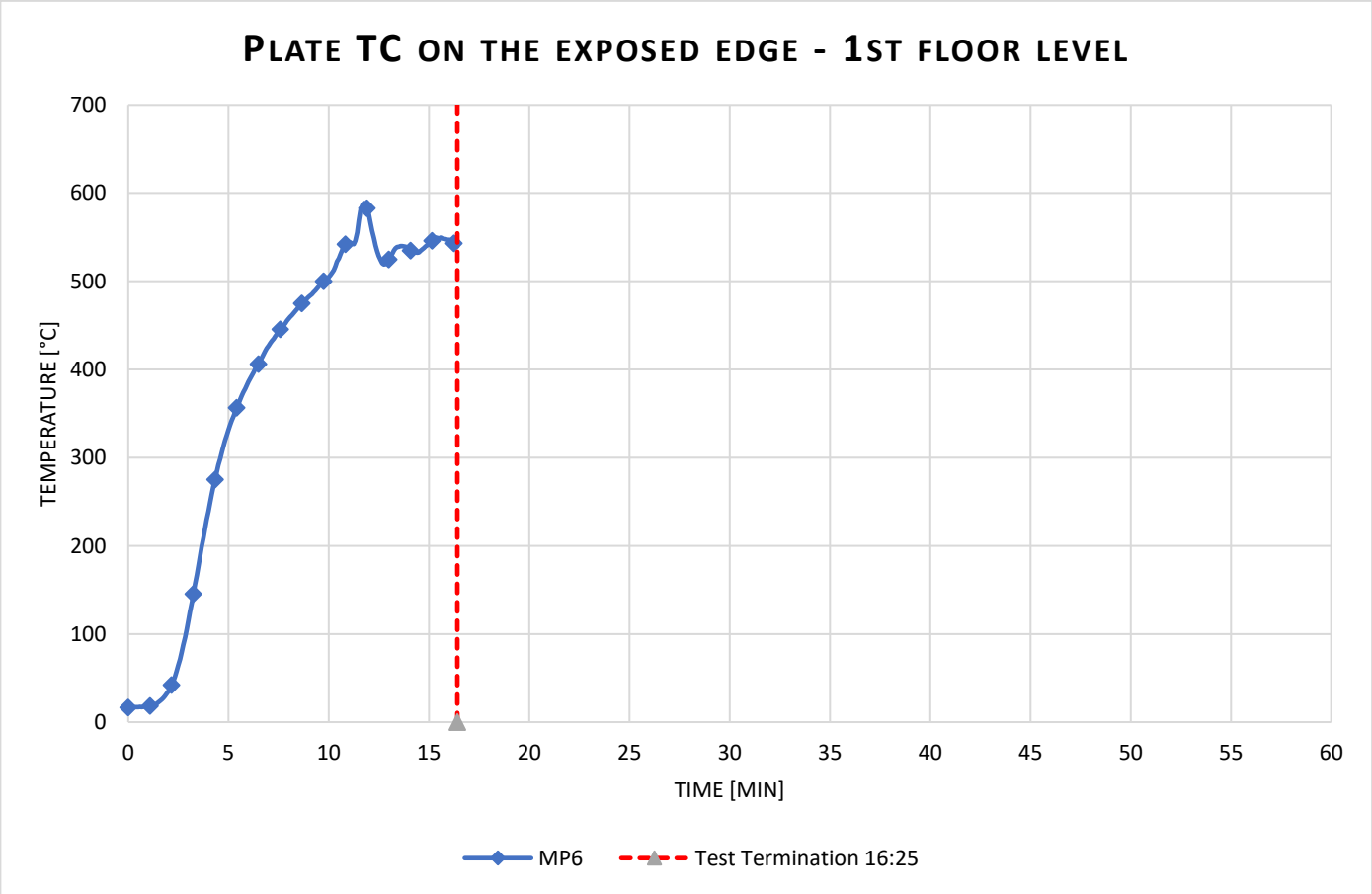

Temperature measured using plate Inconel 1st floor exposed edge

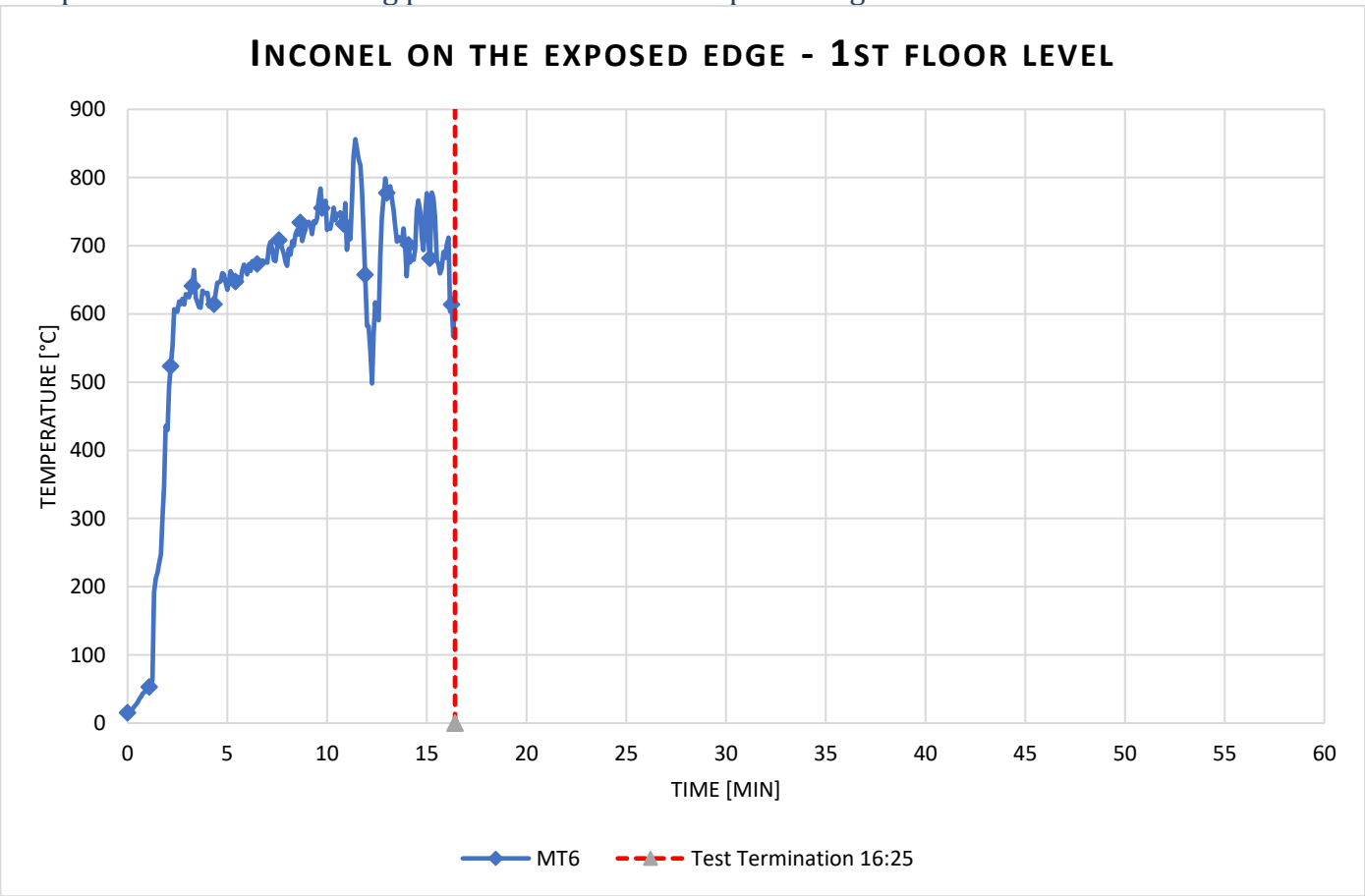

Radiant heat calculated from Plate TC

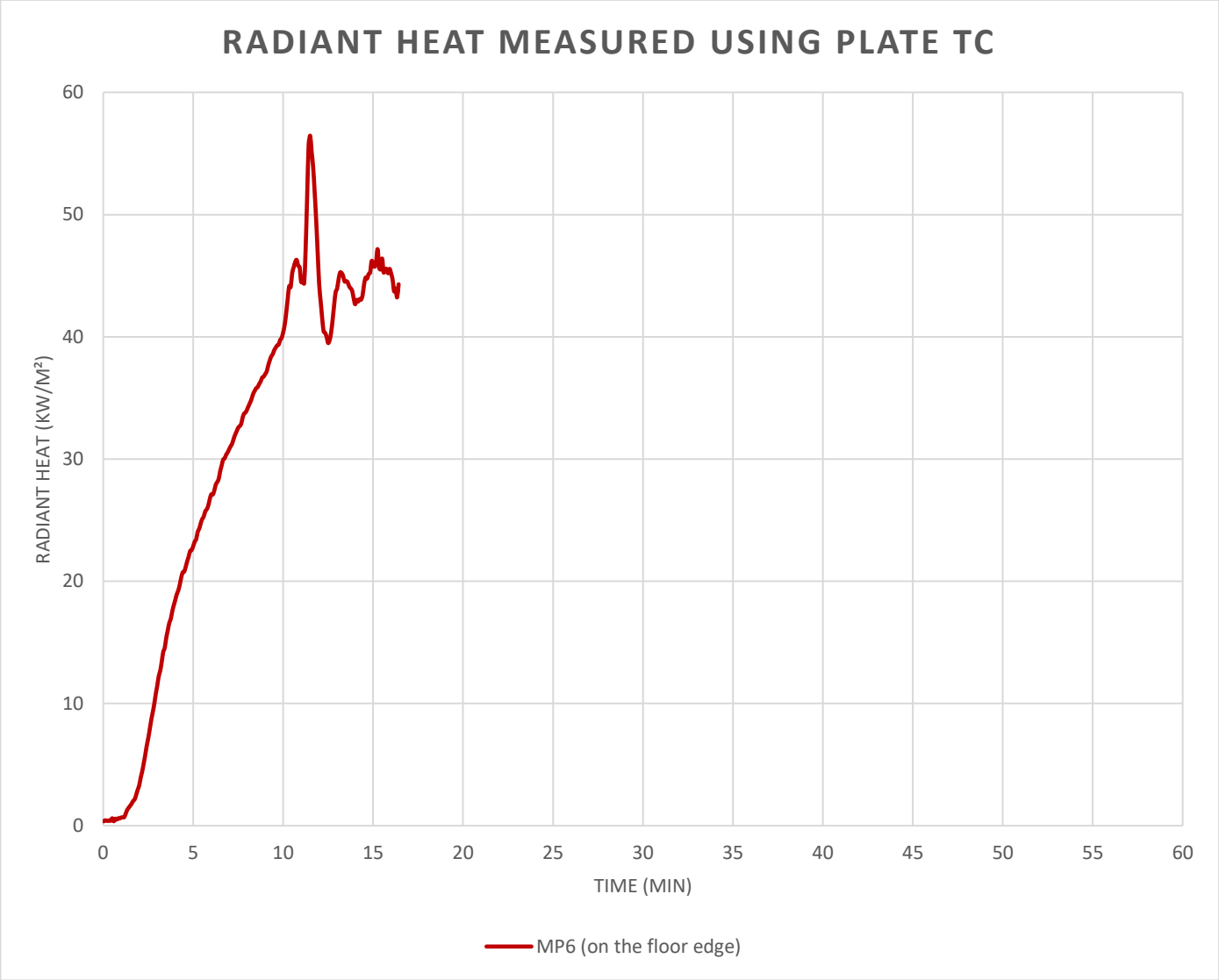

Data measurement from 1st floor exposed edge.

Layout

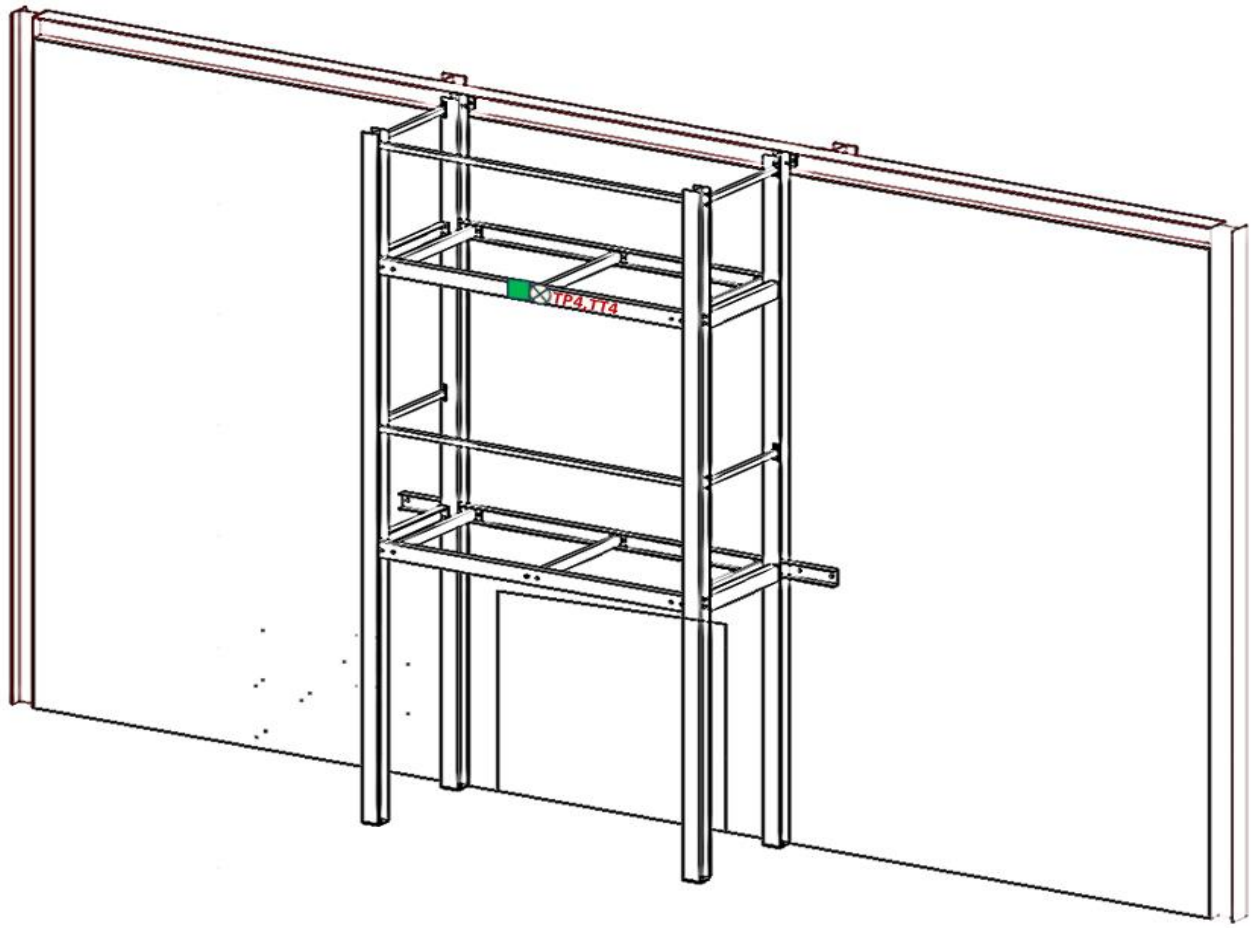

Temperature measured from the Plate TC on exposed edge at 2nd floor

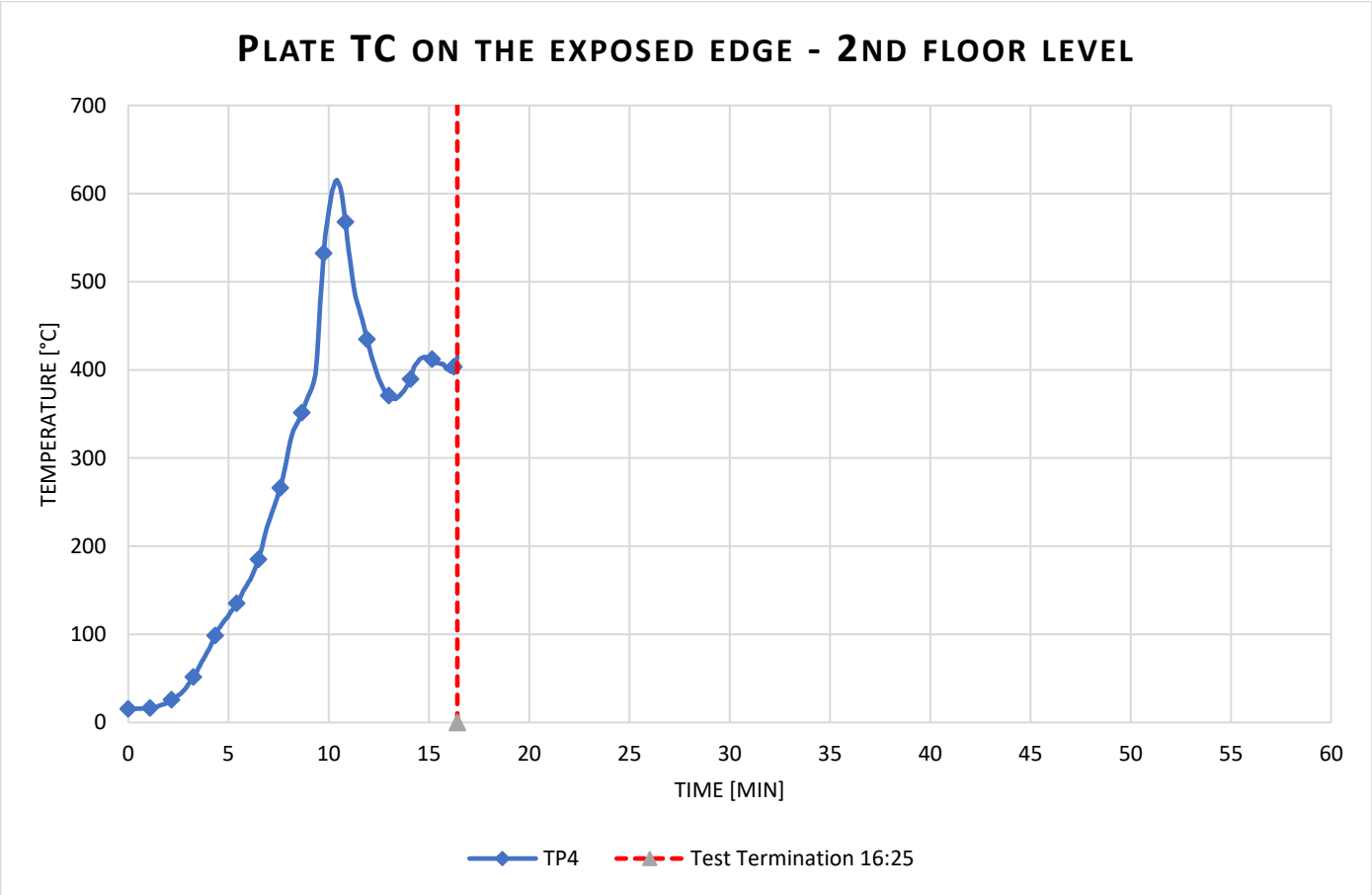

Temperature measured from the Inconel on exposed edge at 2nd floor

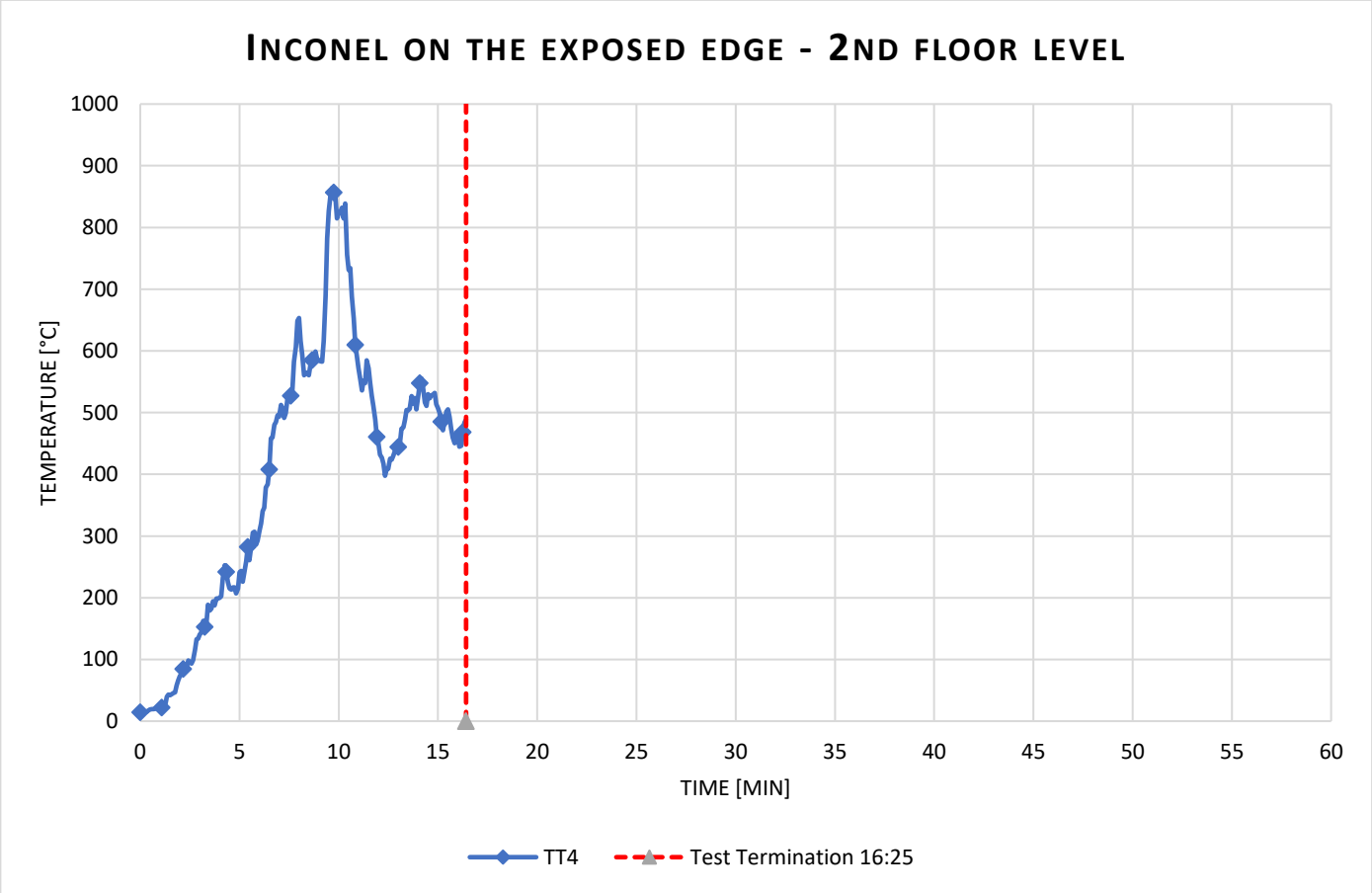

Radiant heat calculated from Plate TC

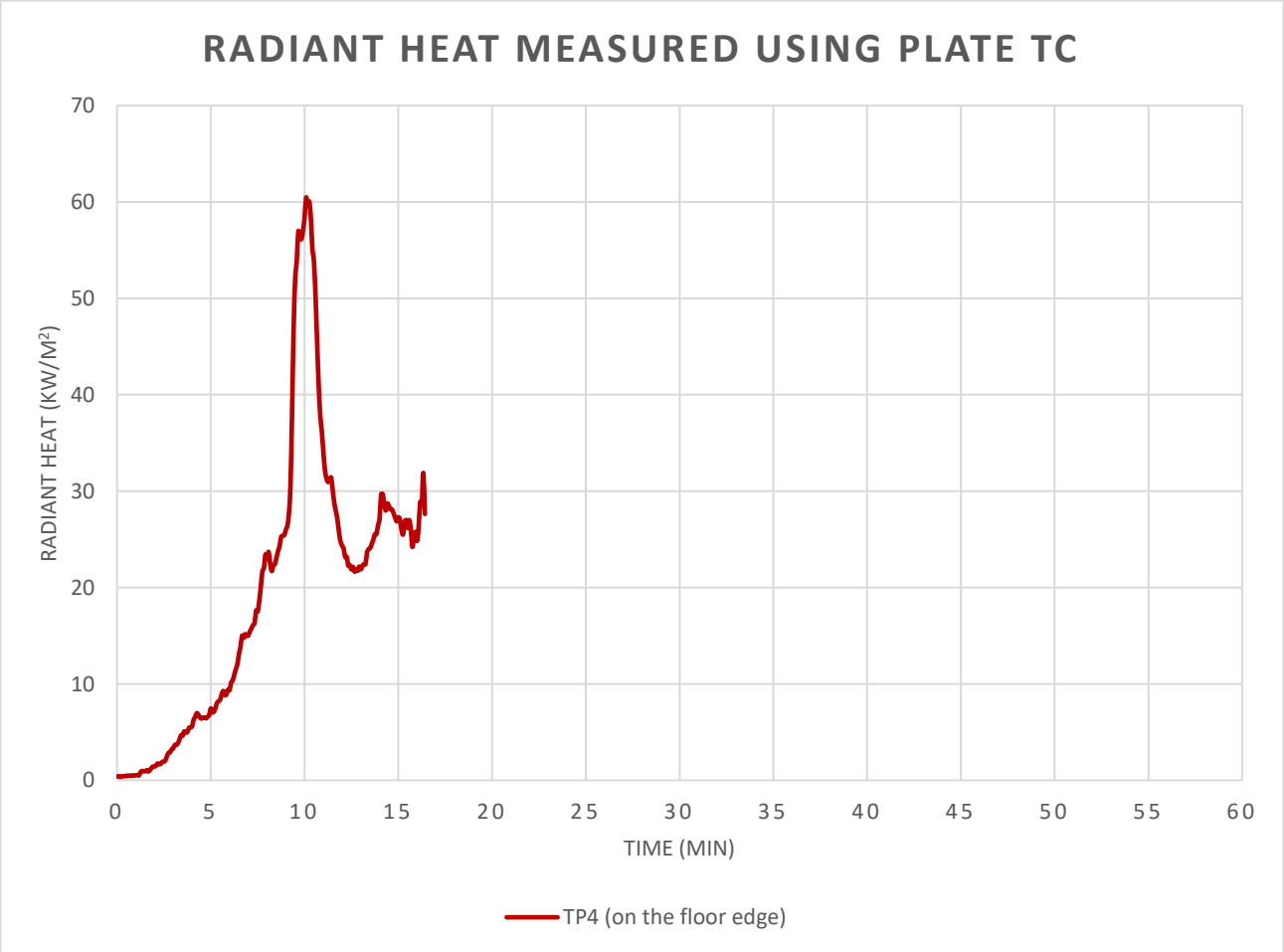

Data measurement from 1st floor handrails.

Layout

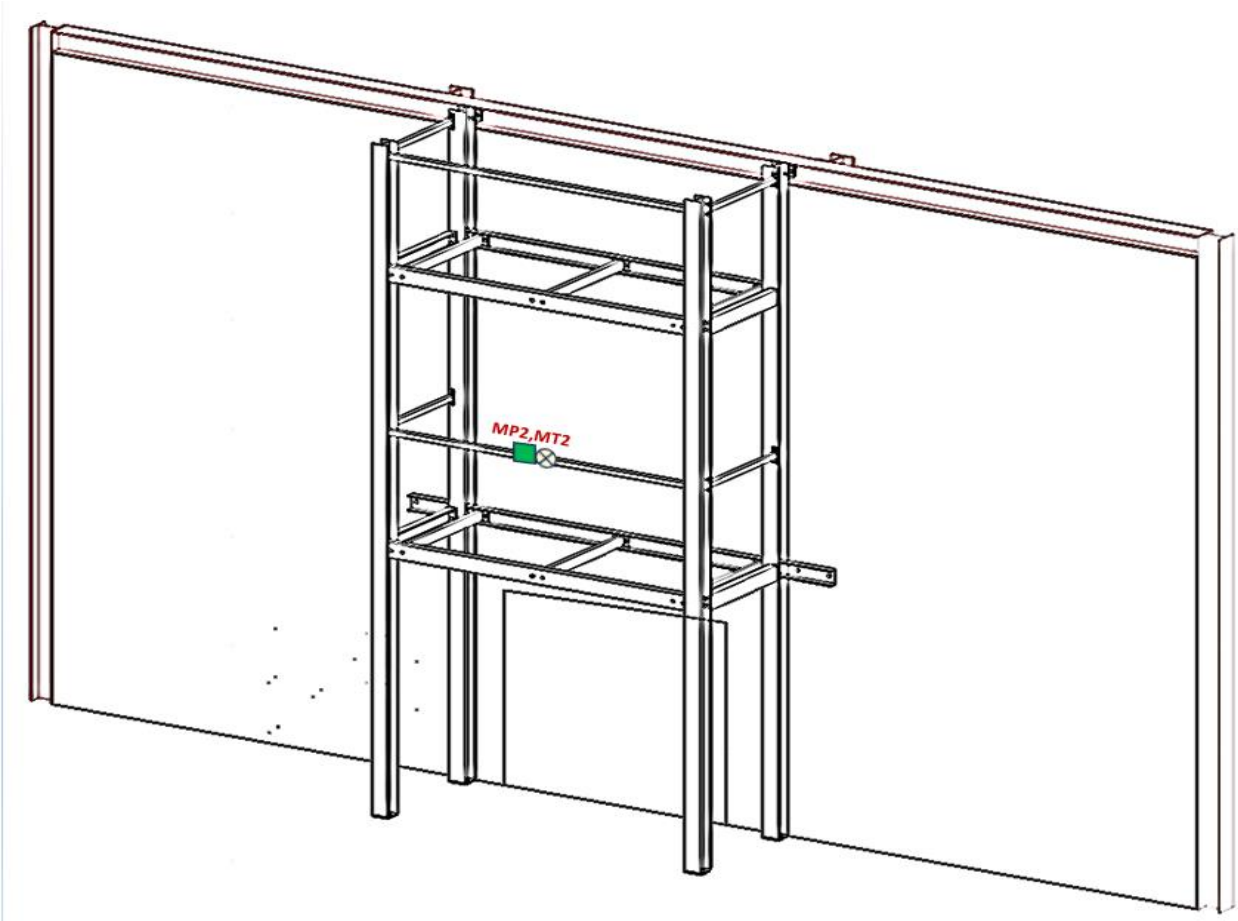

Temperature measured from the Plate TC on 1st floor handrails

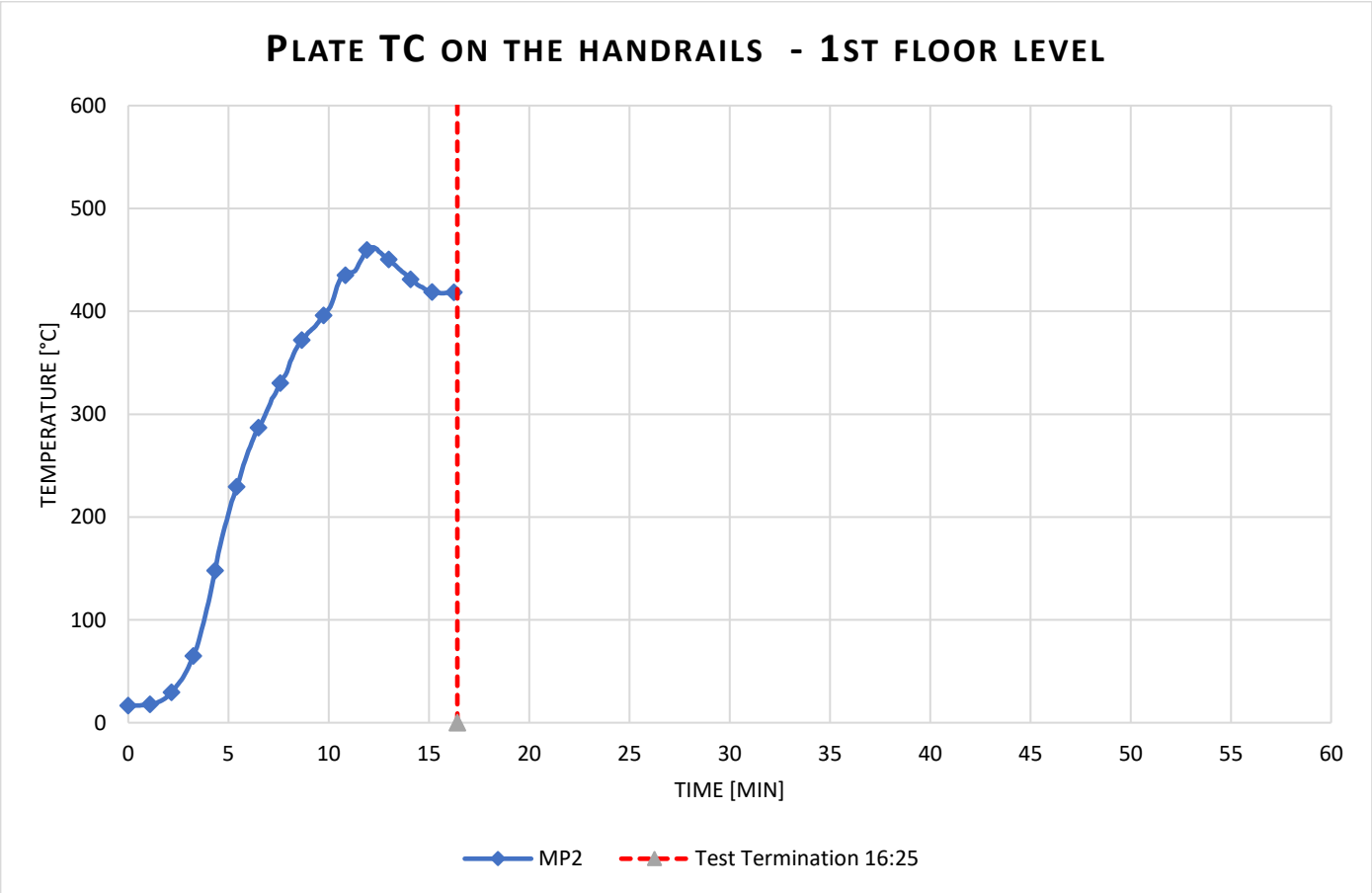

Temperature measured from the Inconel on 1st floor handrails

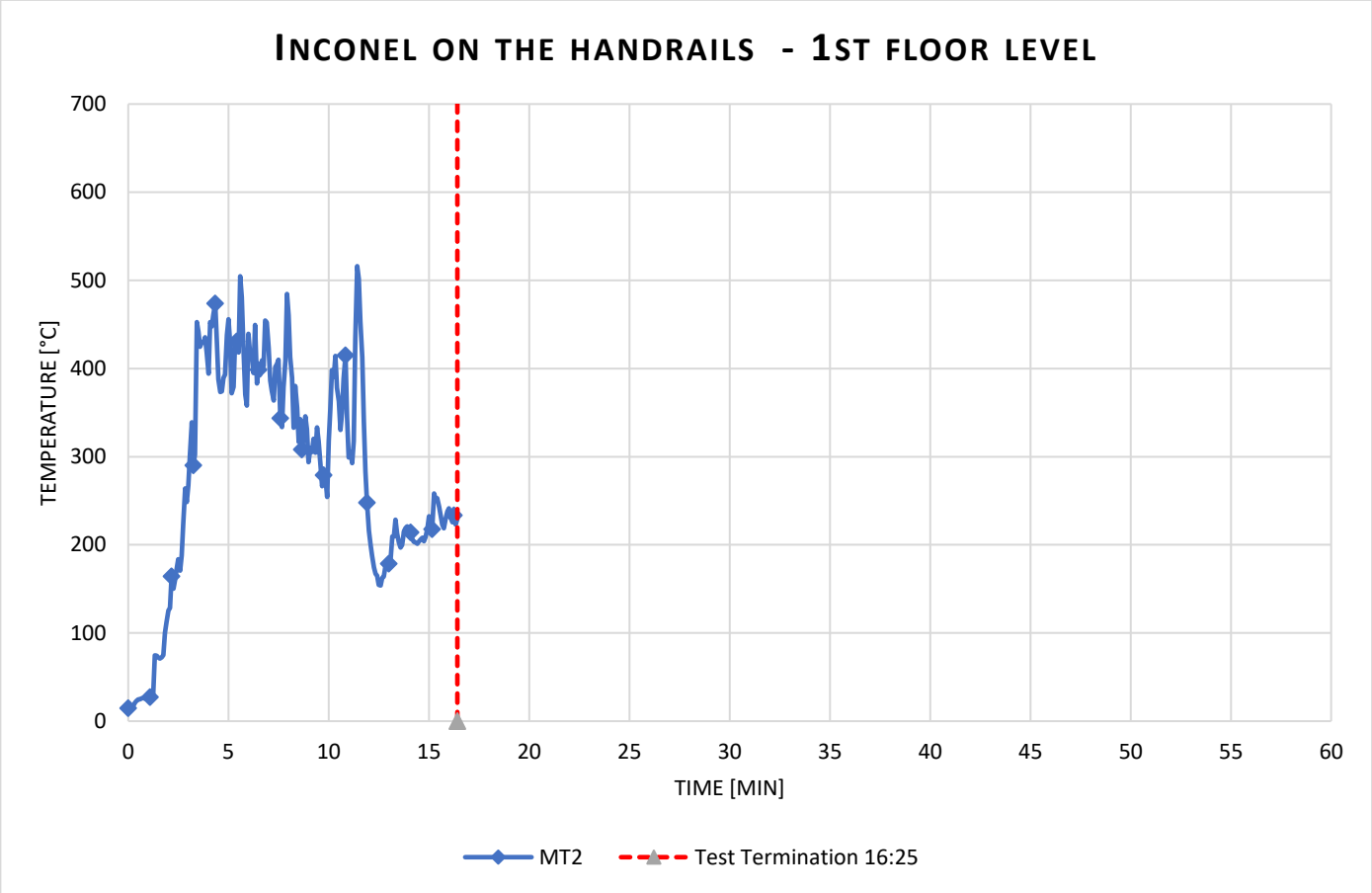

Radiant heat calculated from Plate TC

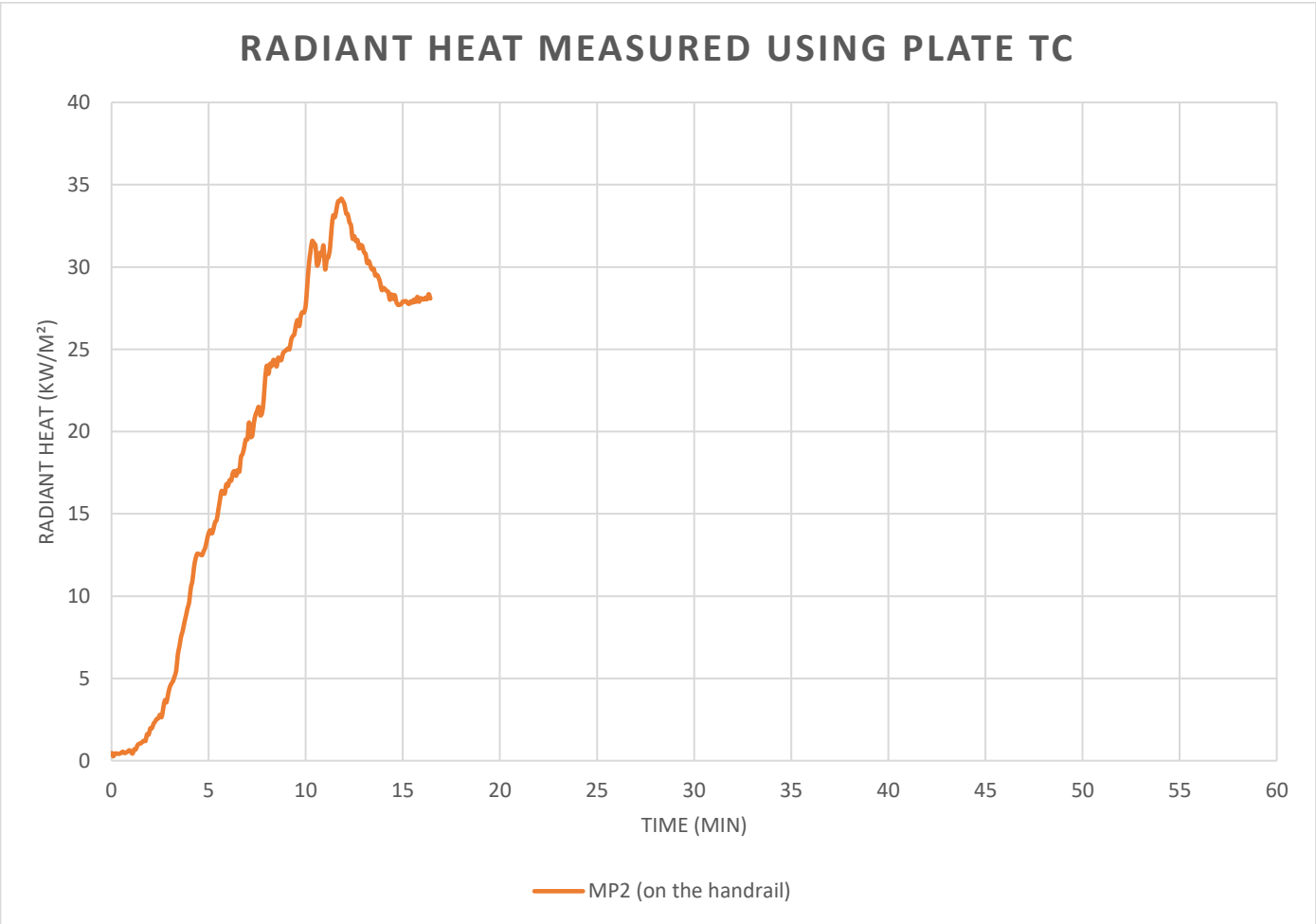

Data measurement from 2nd floor handrails.

Layout

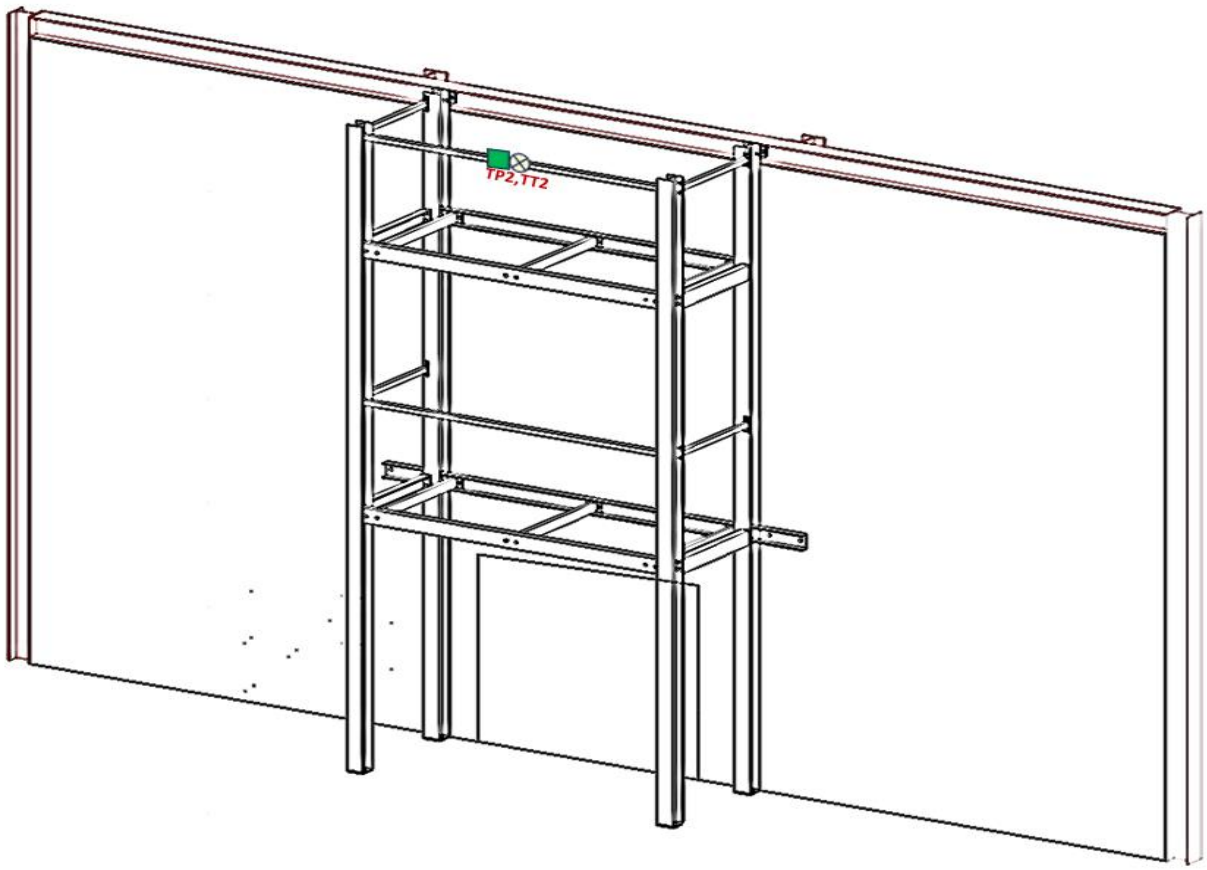

Temperature measured from the Plate TC on 2nd floor handrails.

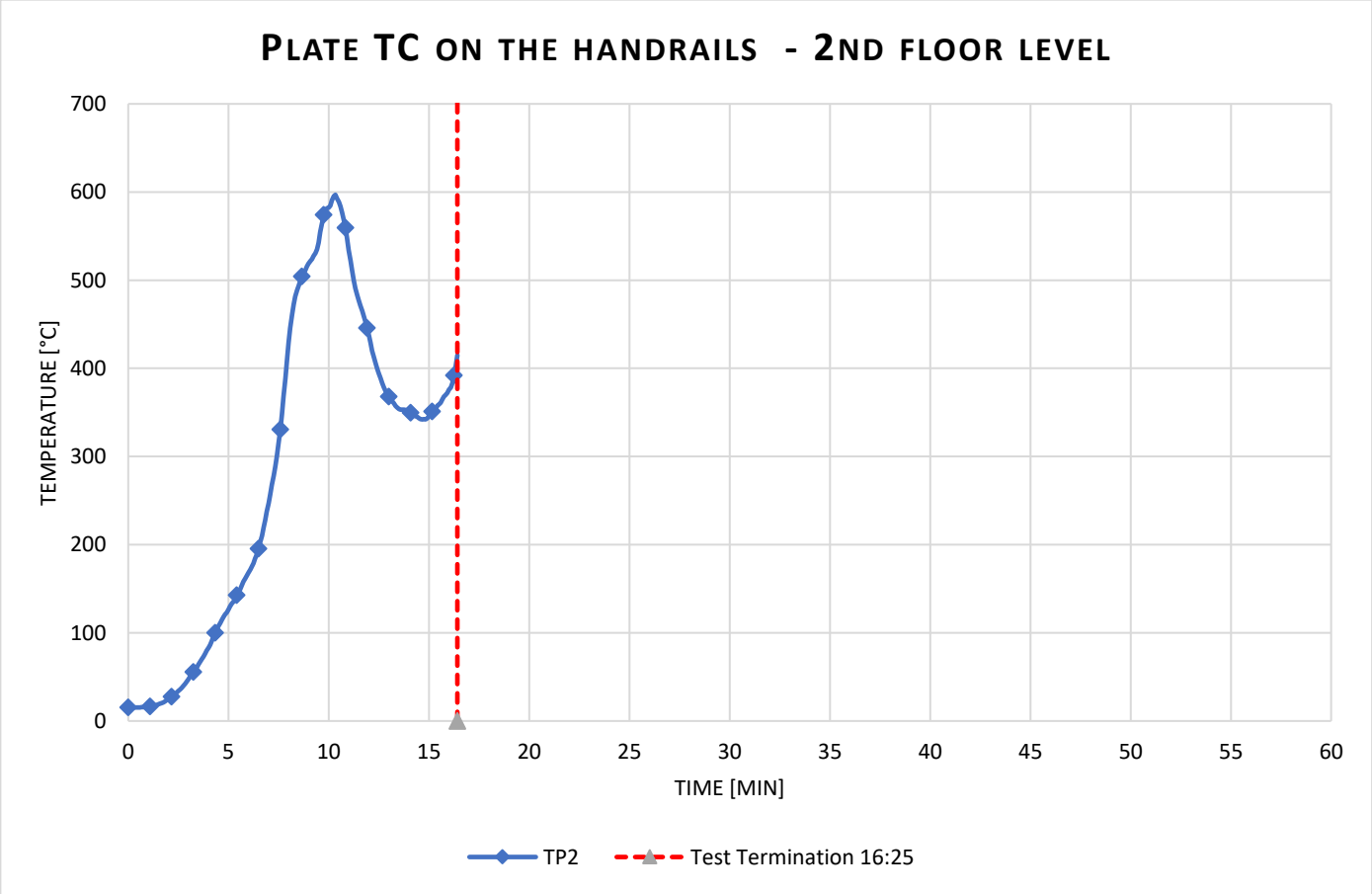

Temperature measured from the Inconel on 2nd floor handrails

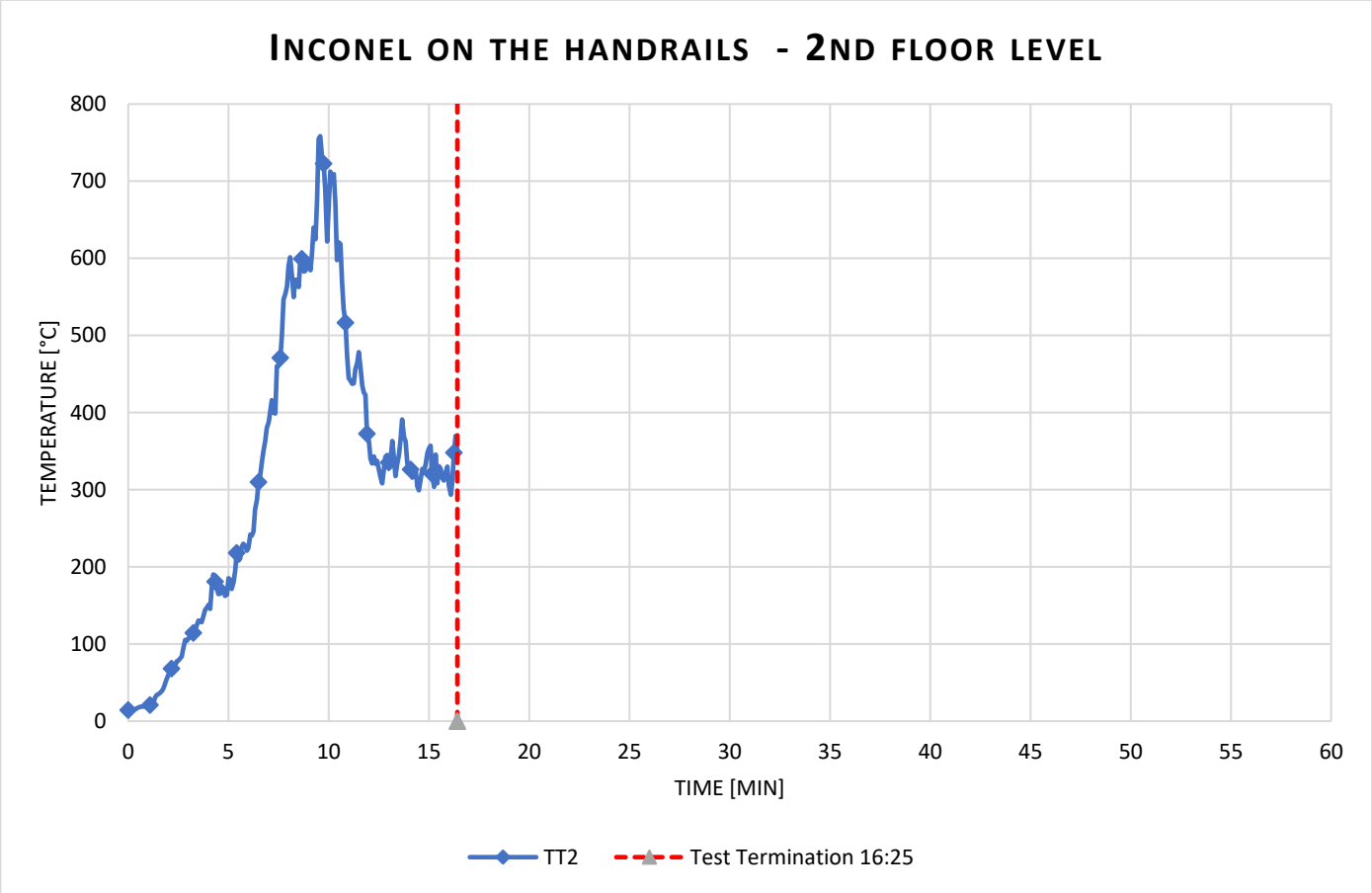

Radiant heat calculated from Plate TC

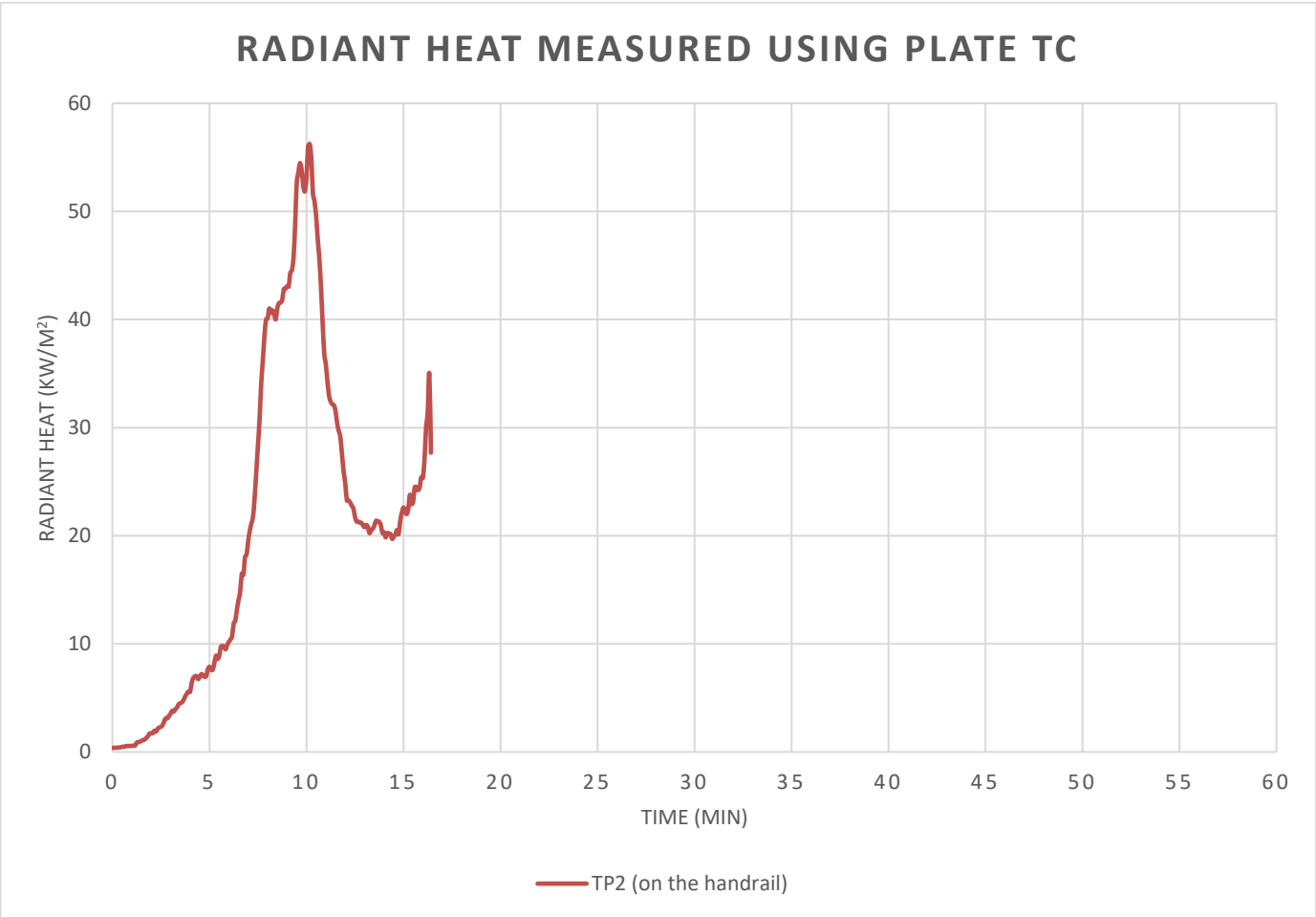

Data measurement from Ground floor sidewalls

Layout

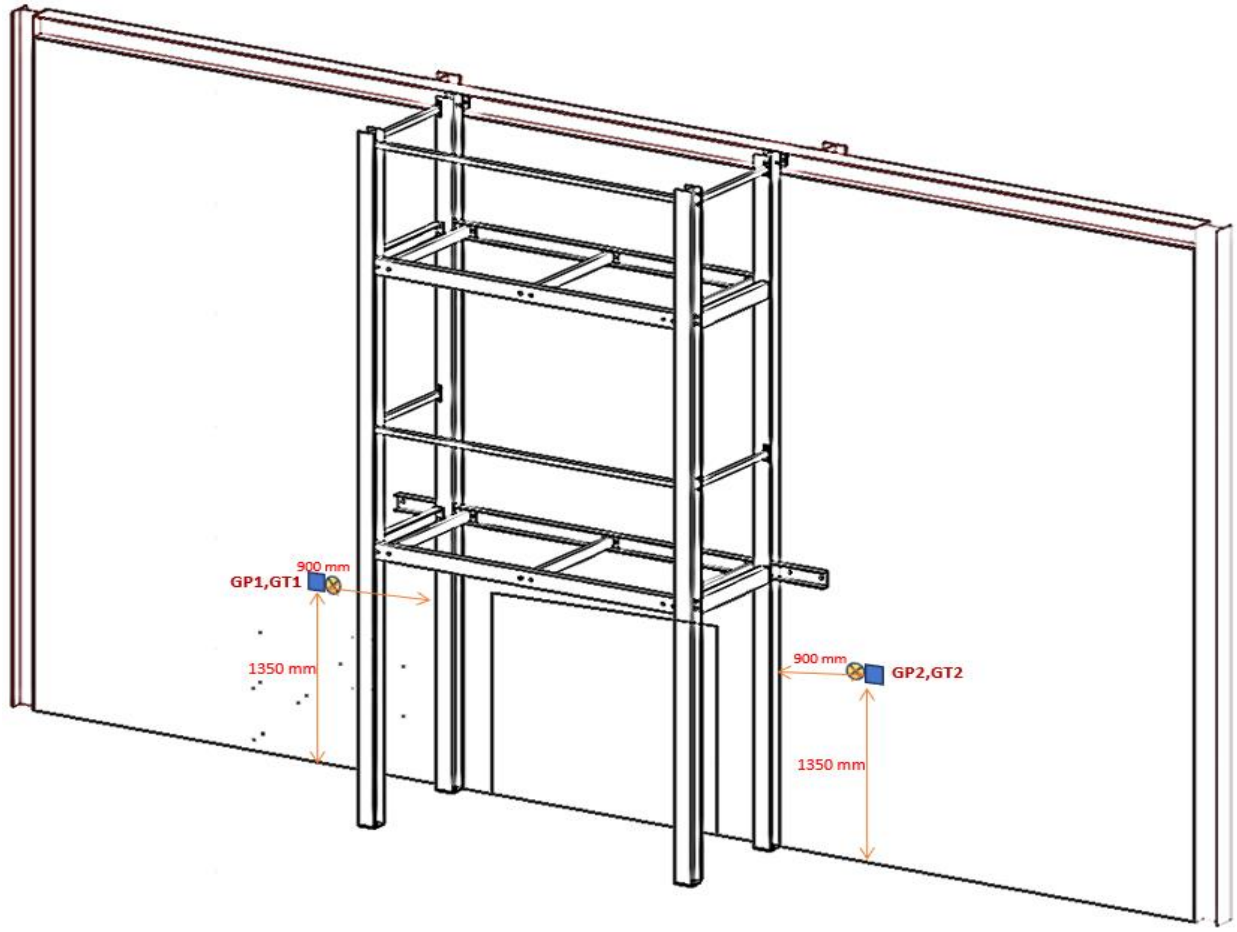

Temperature measured from the Plate TC's from Ground floor sidewalls

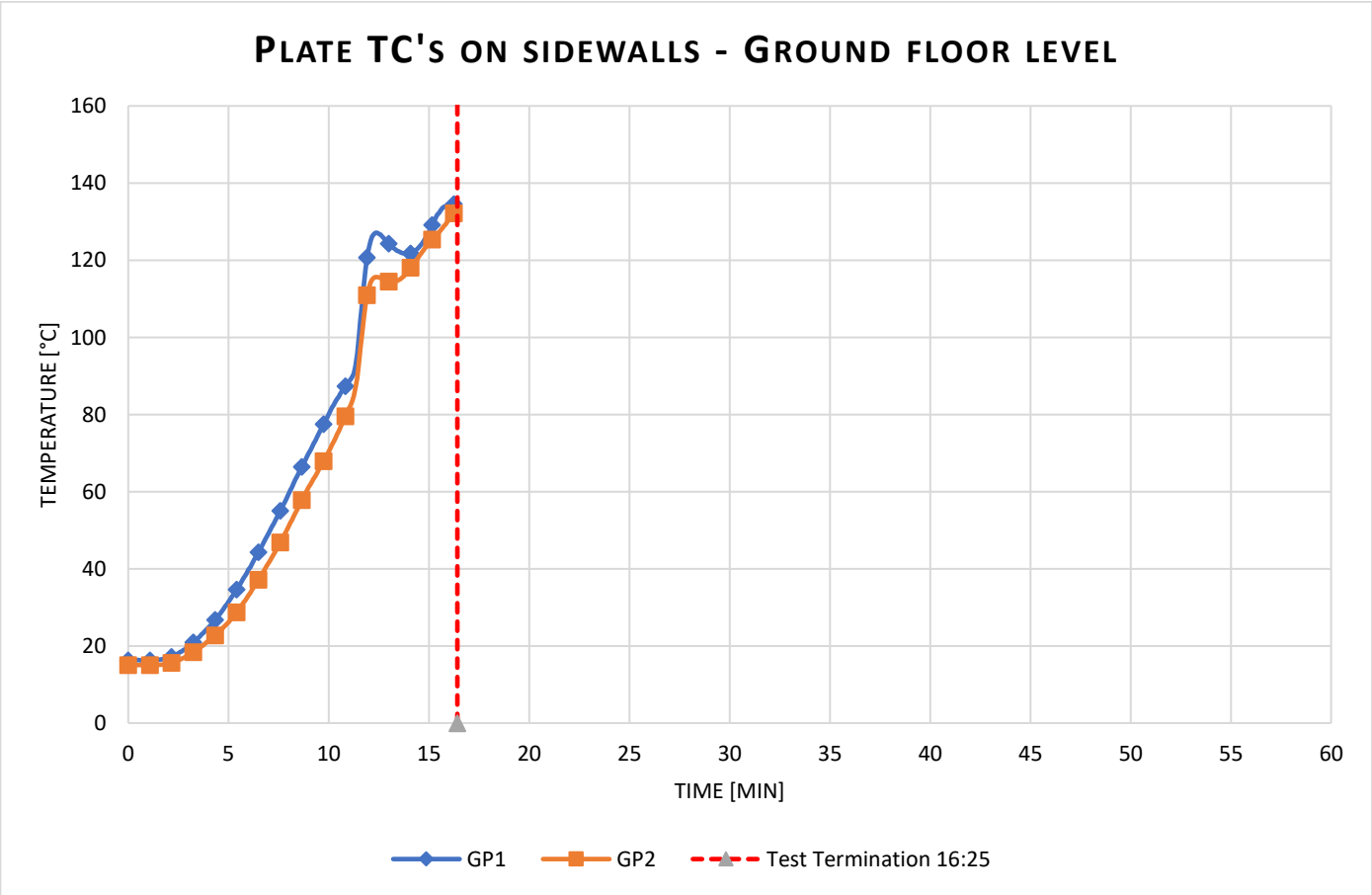

Temperature measured from the Inconel from 1st floor sidewall

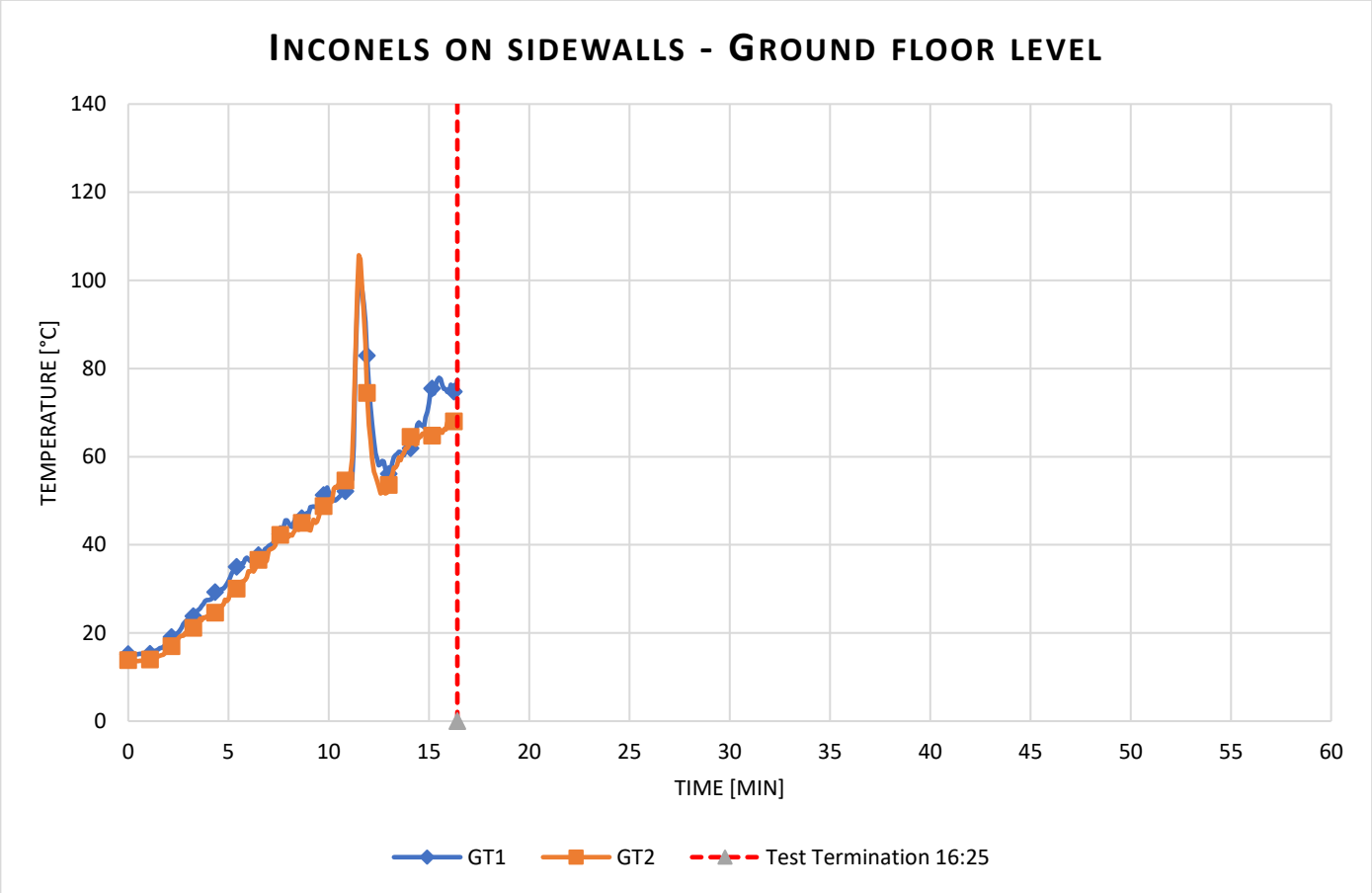

Radiant heat calculated from Plate TC's

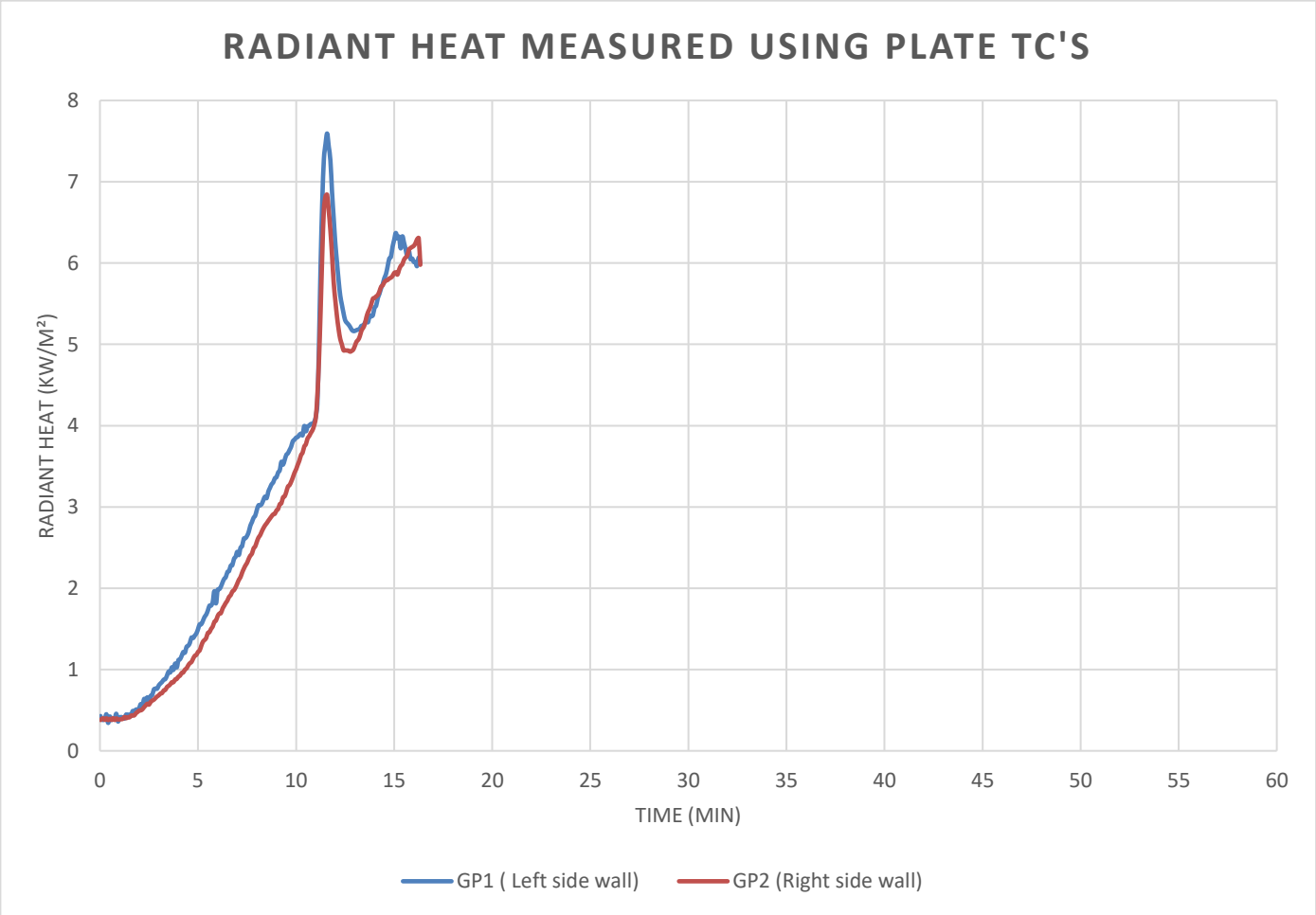

Data measurement from 1st floor sidewall

Layout

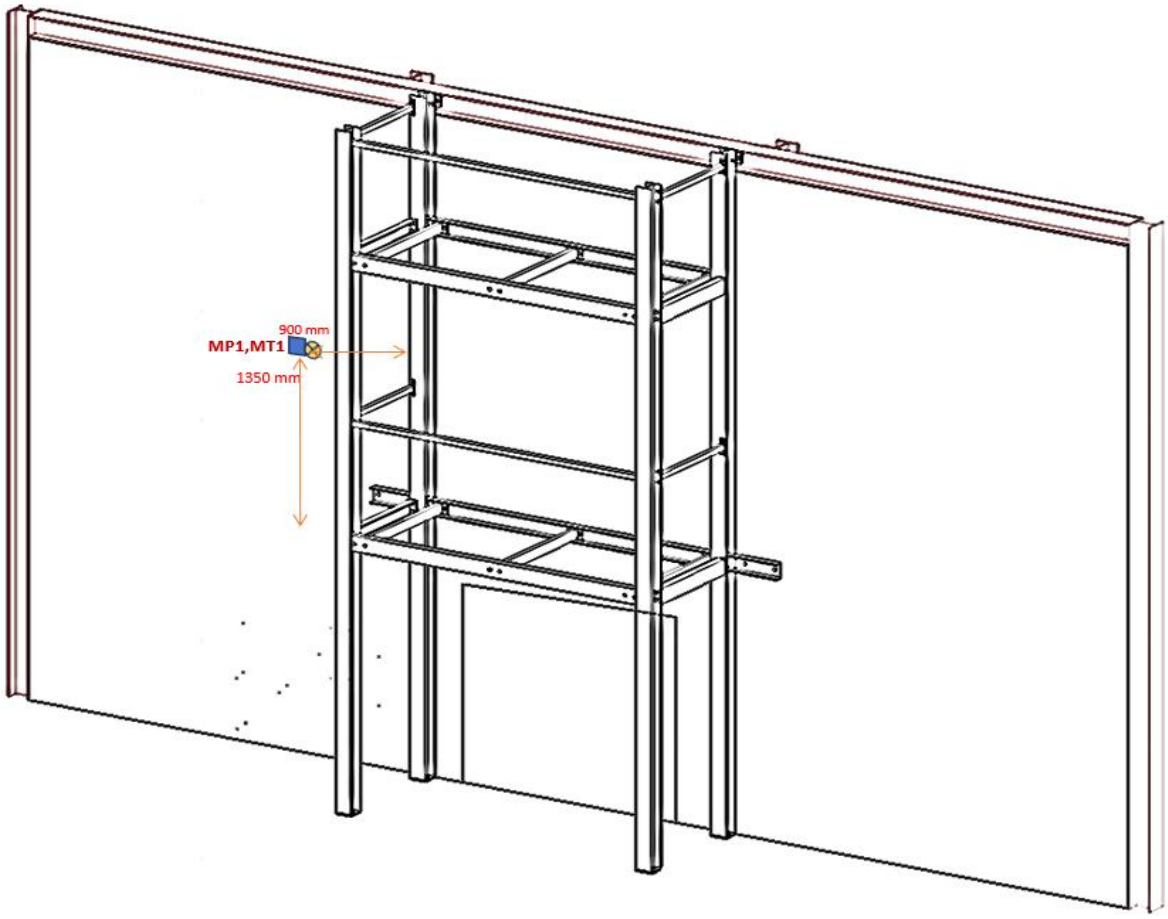

Temperature measured from the Plate TC from 1st floor sidewall

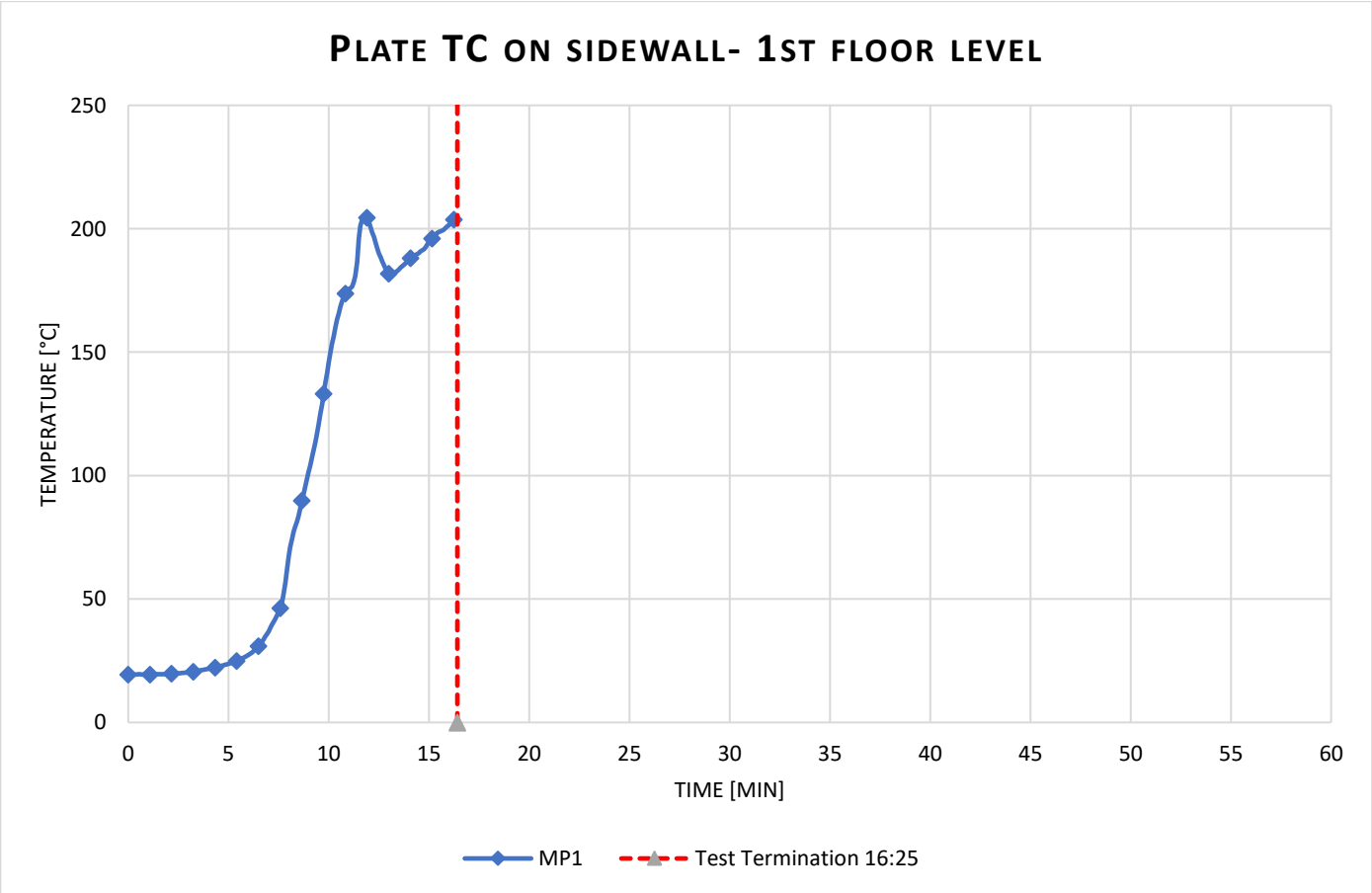

Temperature measured from the Inconel from 1st floor sidewall

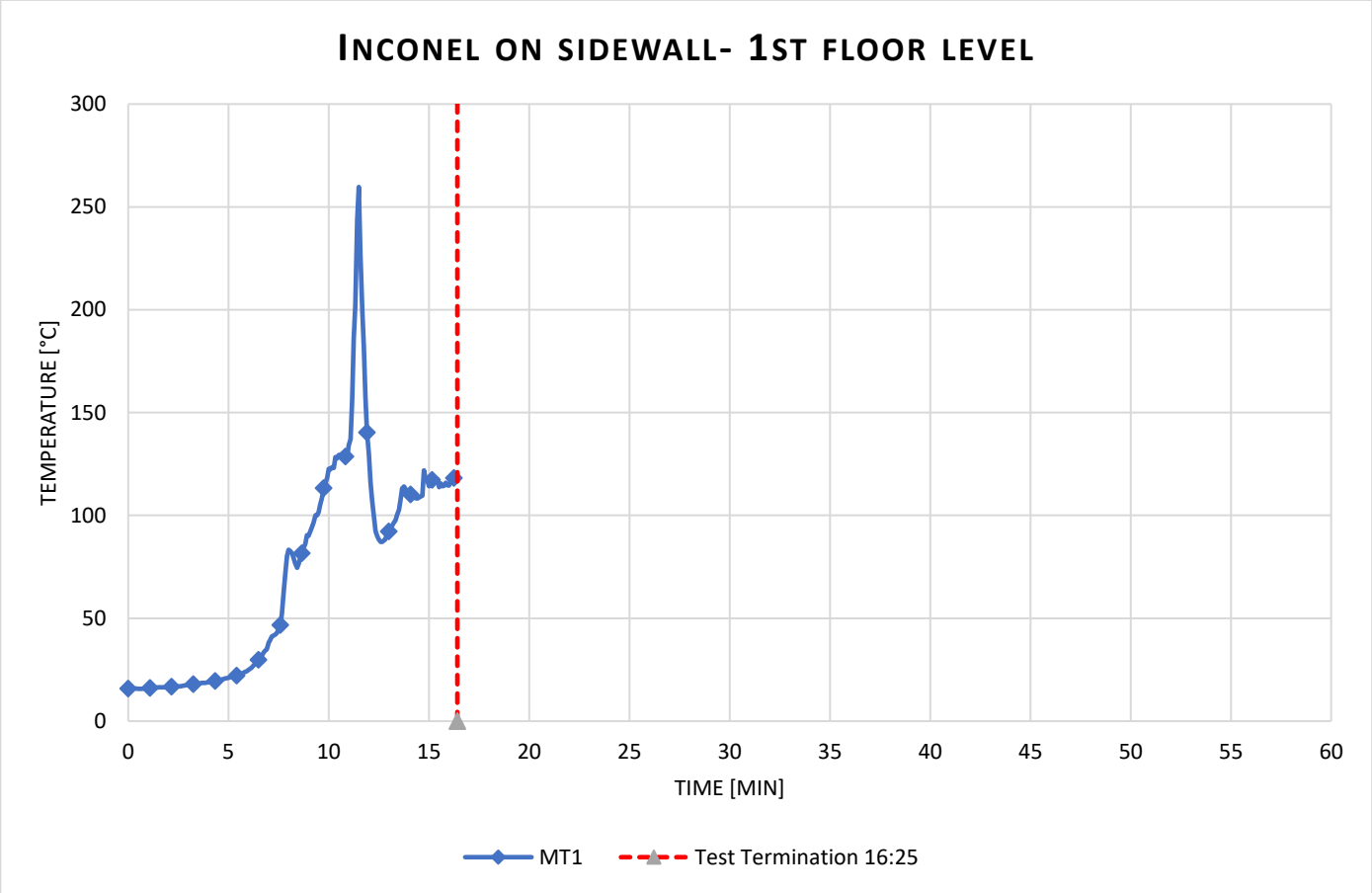

Radiant heat calculated from Plate TC

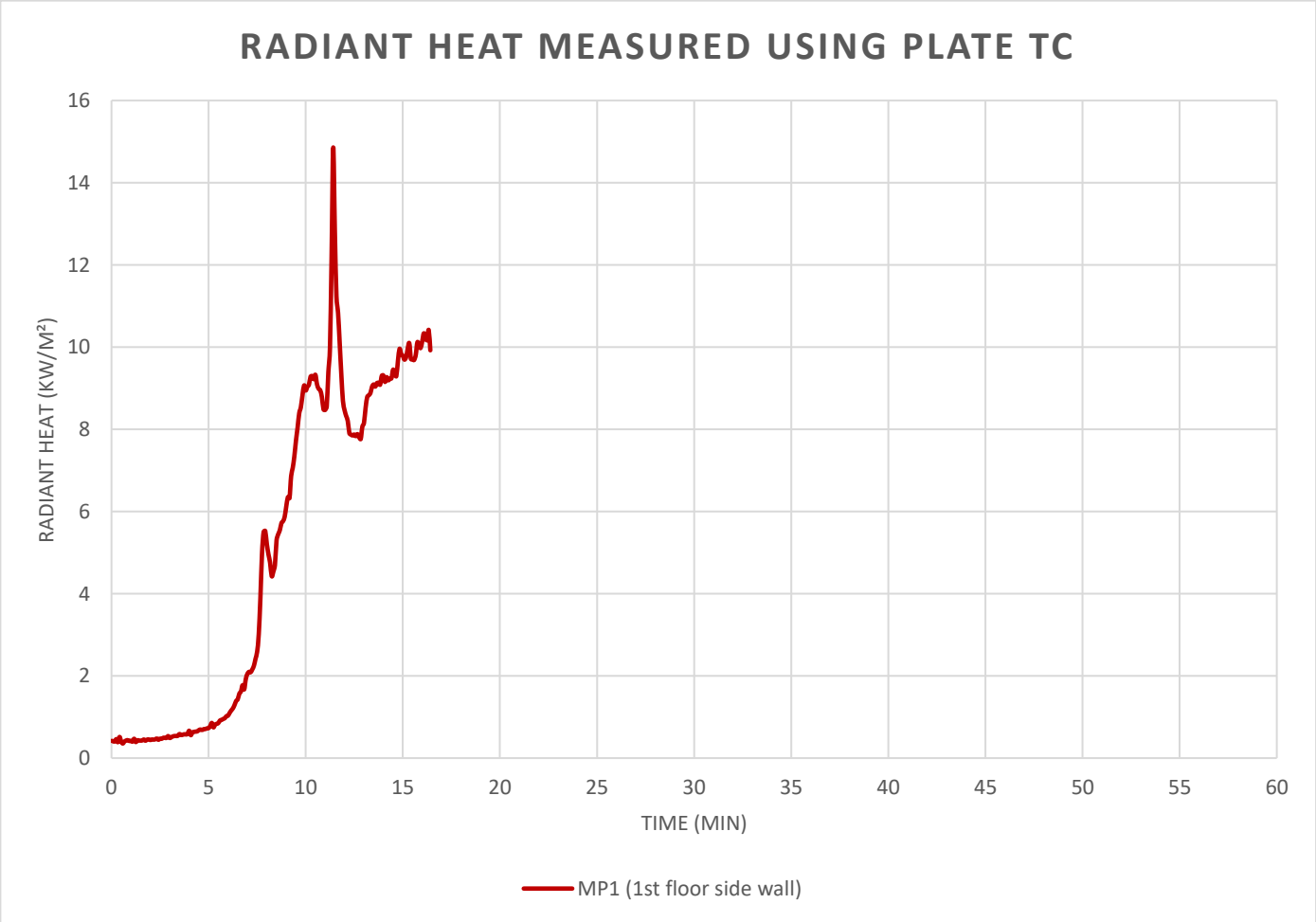

Data measurement from 2nd floor sidewall

Layout

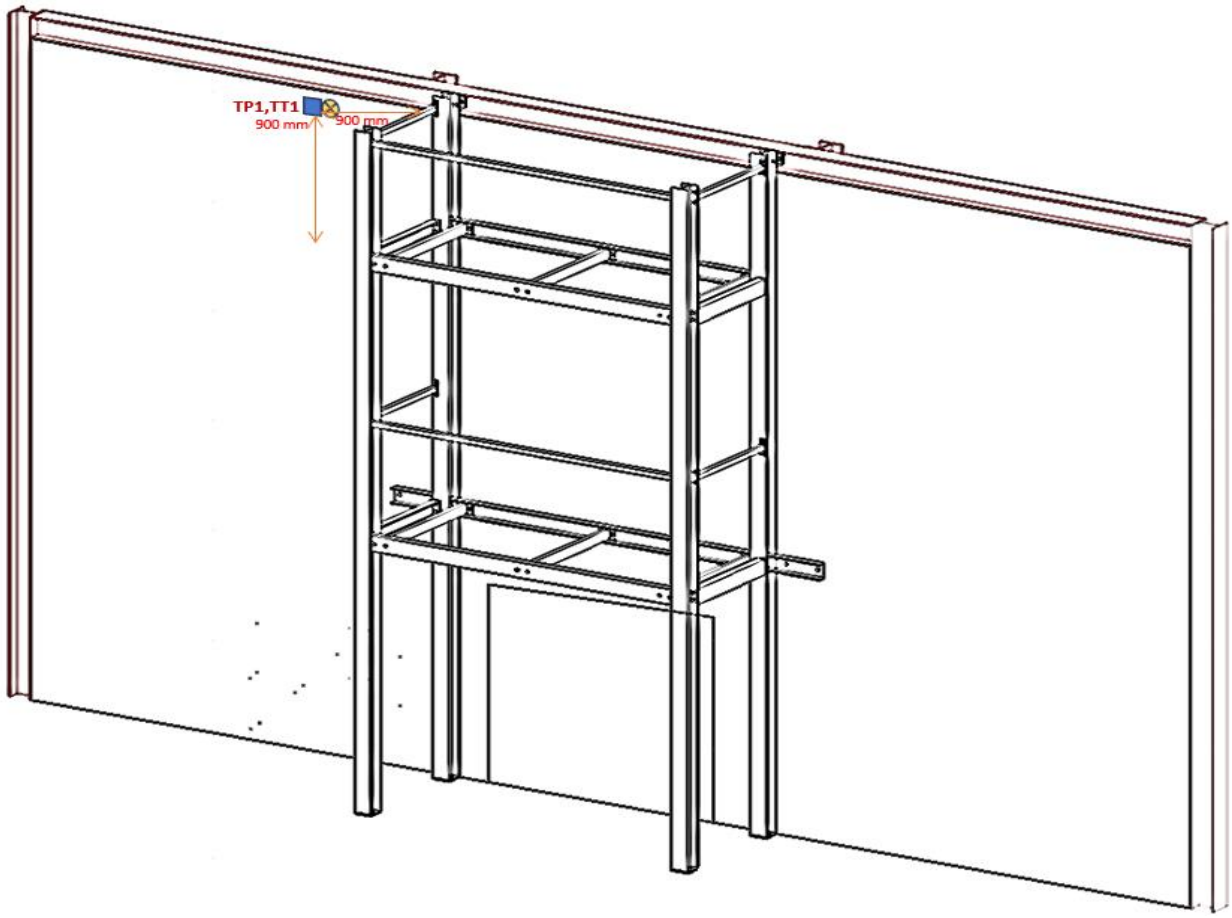

Temperature measured from the Plate TC from 2nd floor sidewall

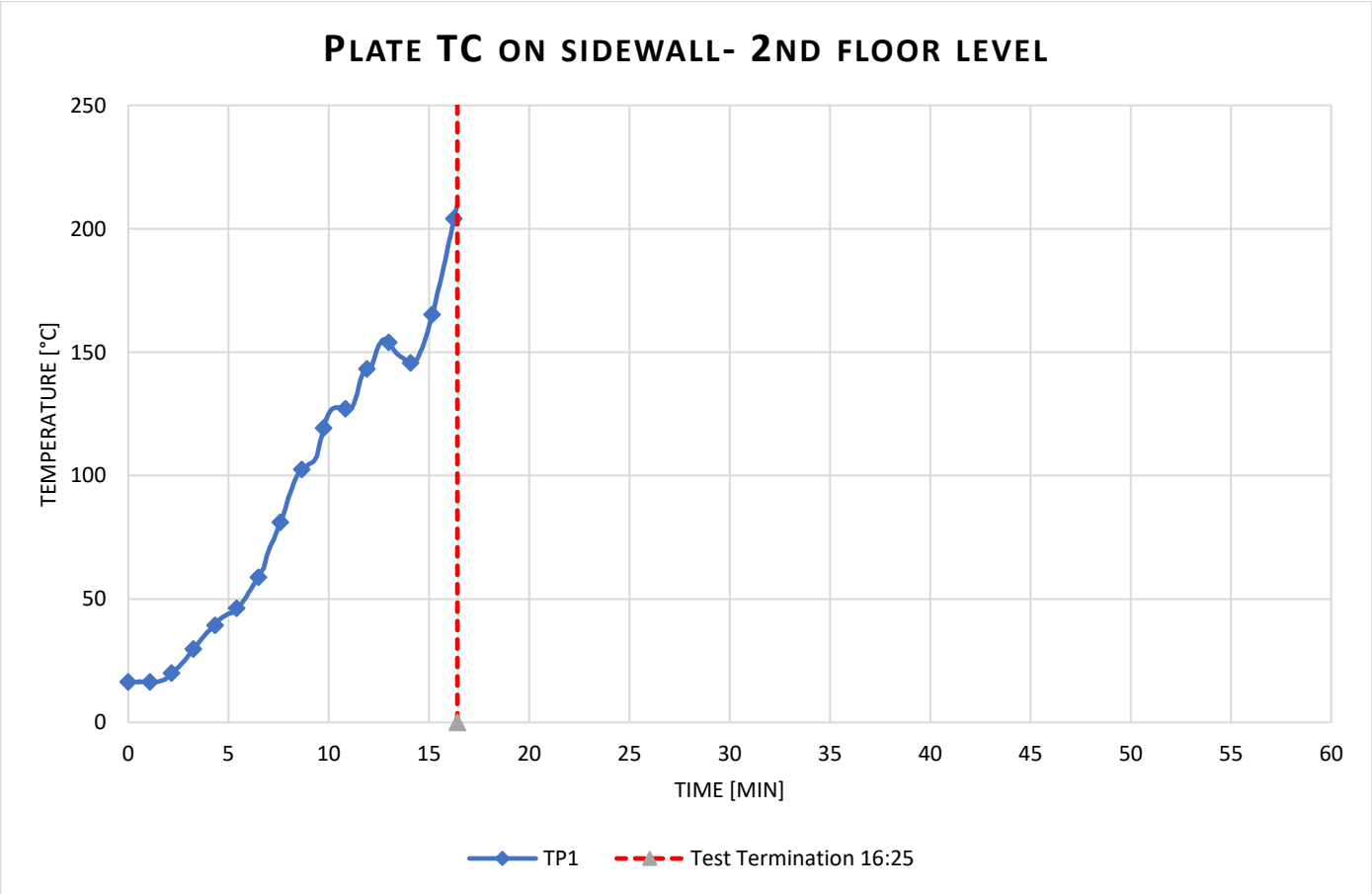

Temperature measured from the Inconel from 2nd floor sidewall

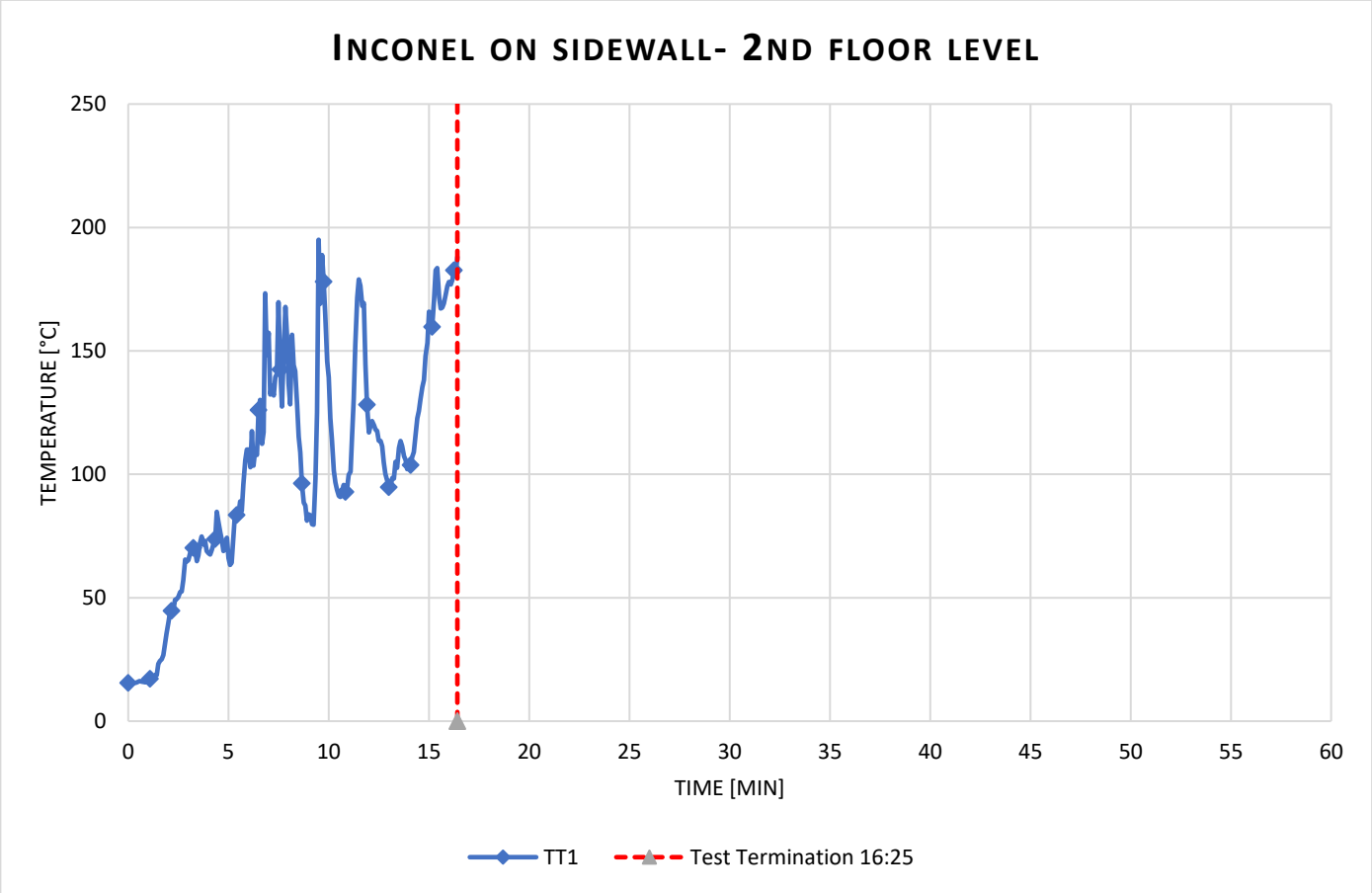

Radiant heat calculated from Plate TC

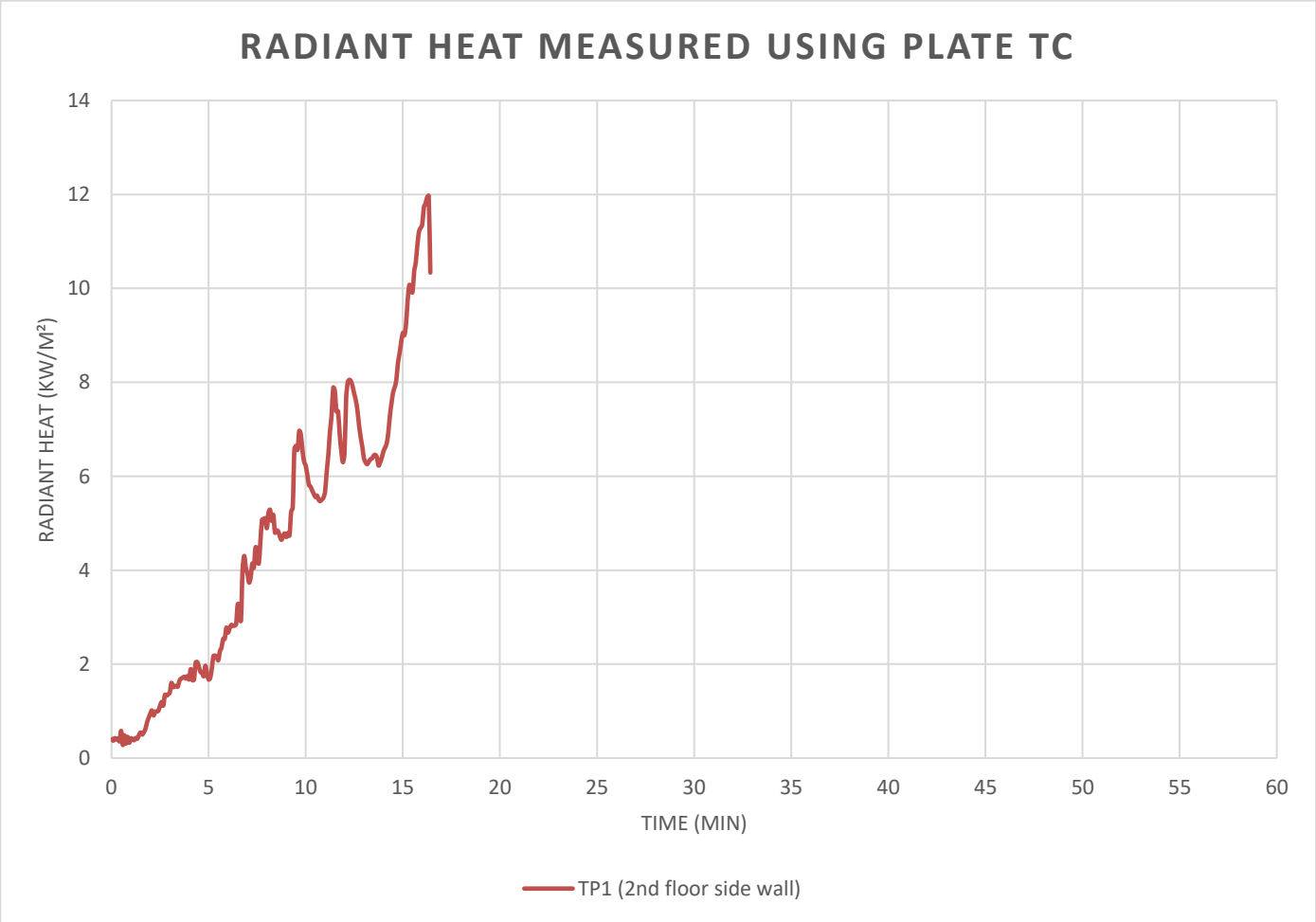

Data measurement from the steel C-section underneath 1st floor

Layout

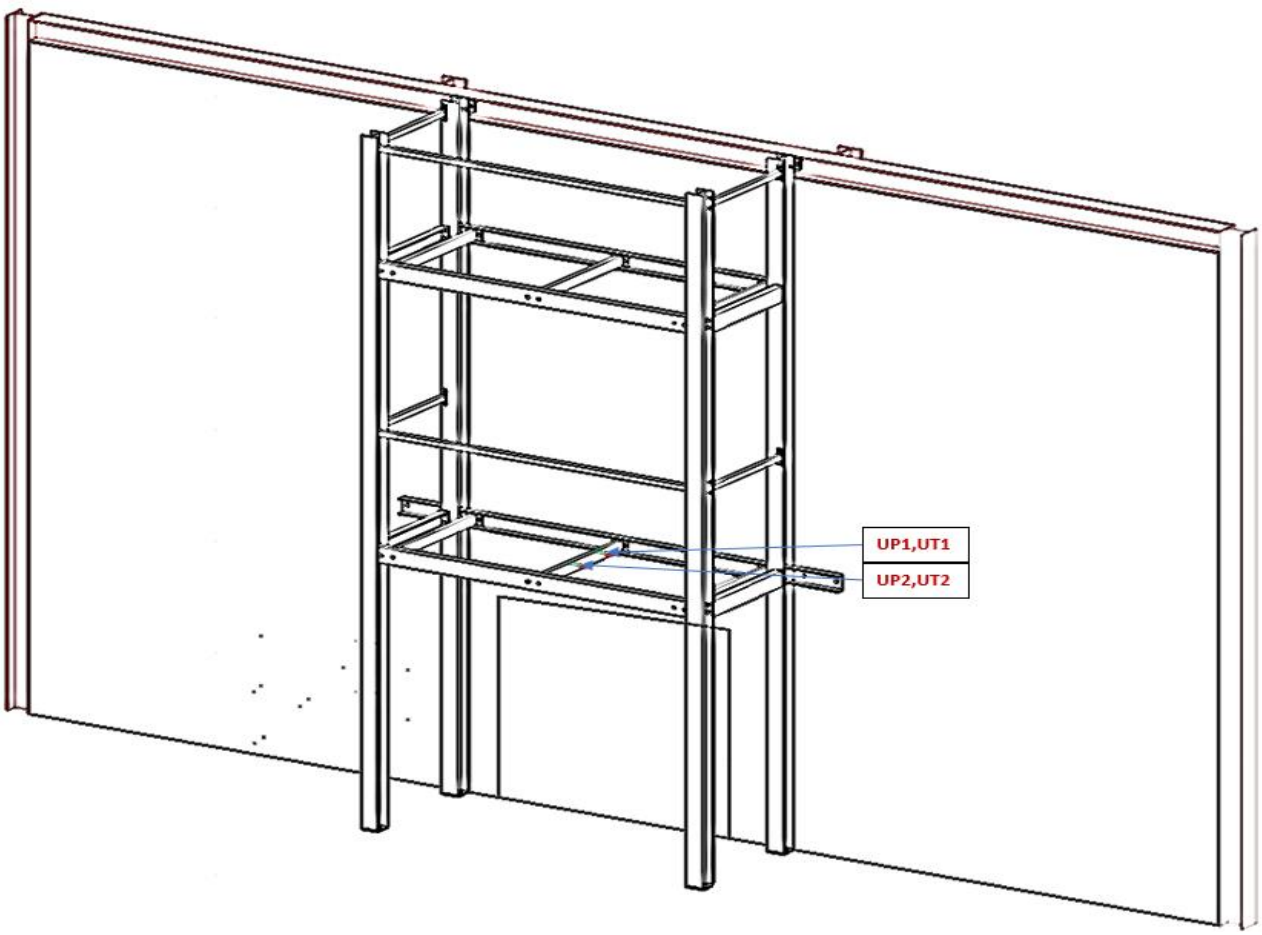

Temperature measured from the Plate TC's on the steel C-section underneath 1st floor

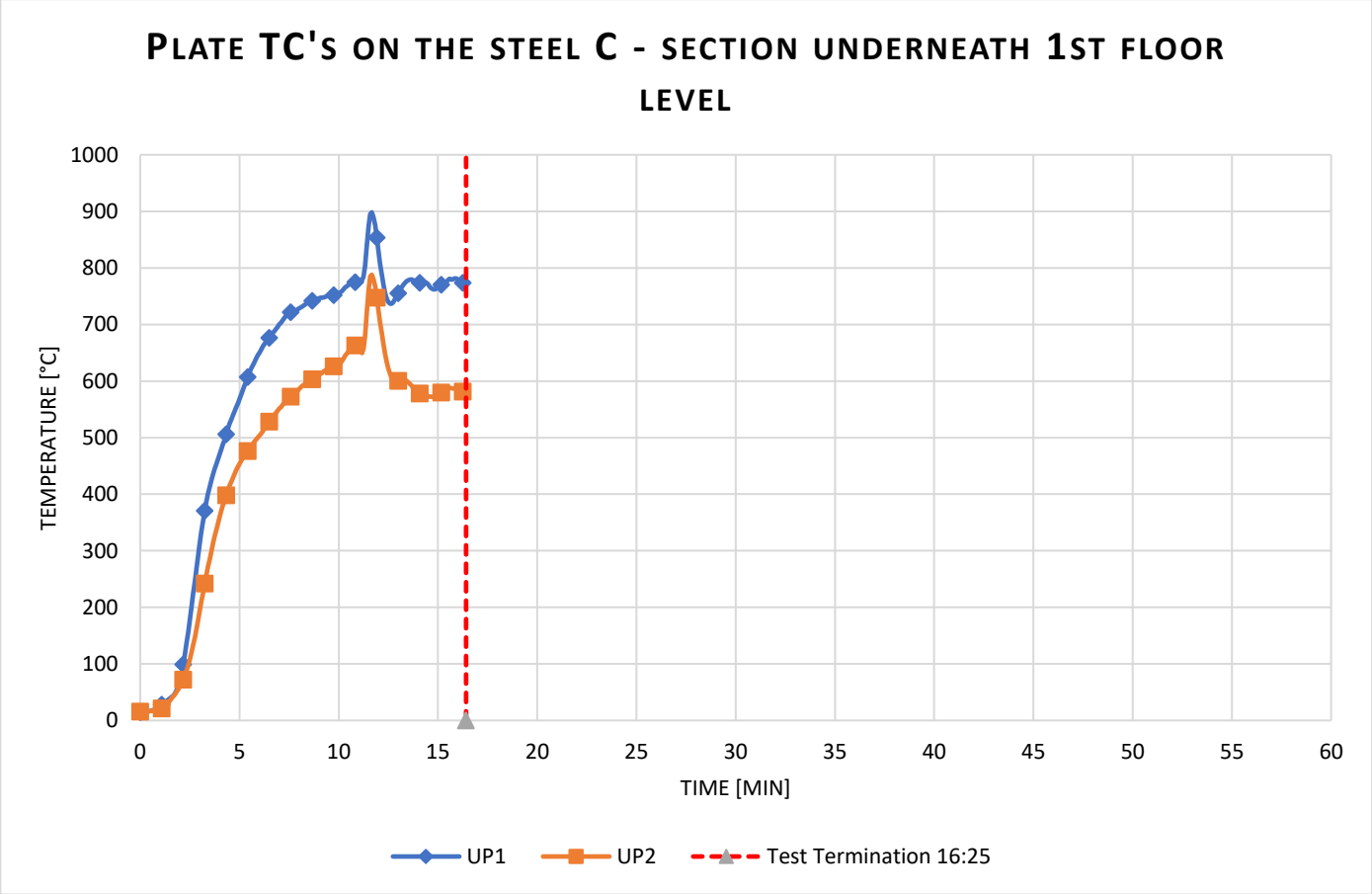

Temperature measured from the Inconels on the steel C-section underneath 1st floor

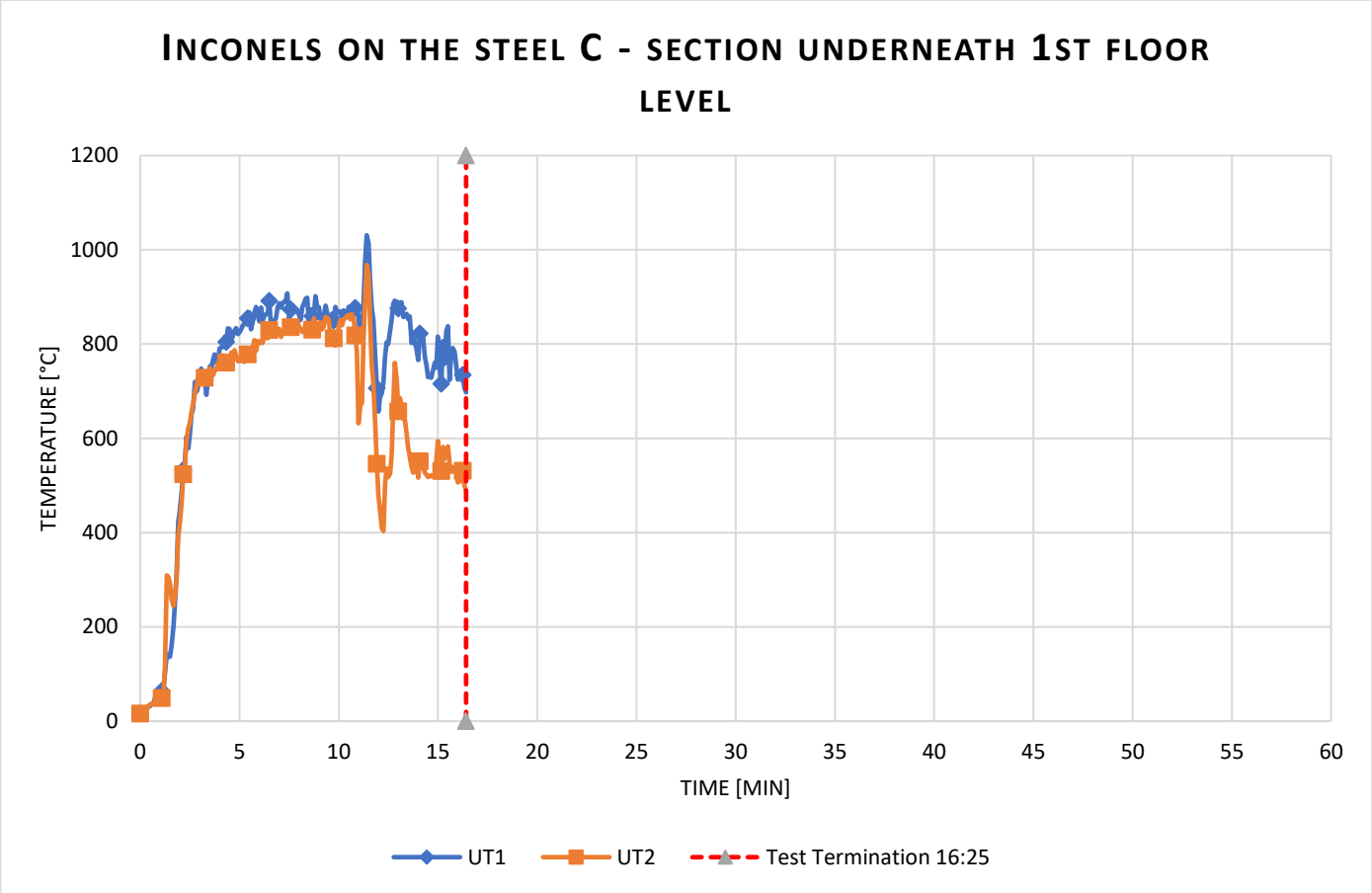

Radiant heat calculated from Plate TC

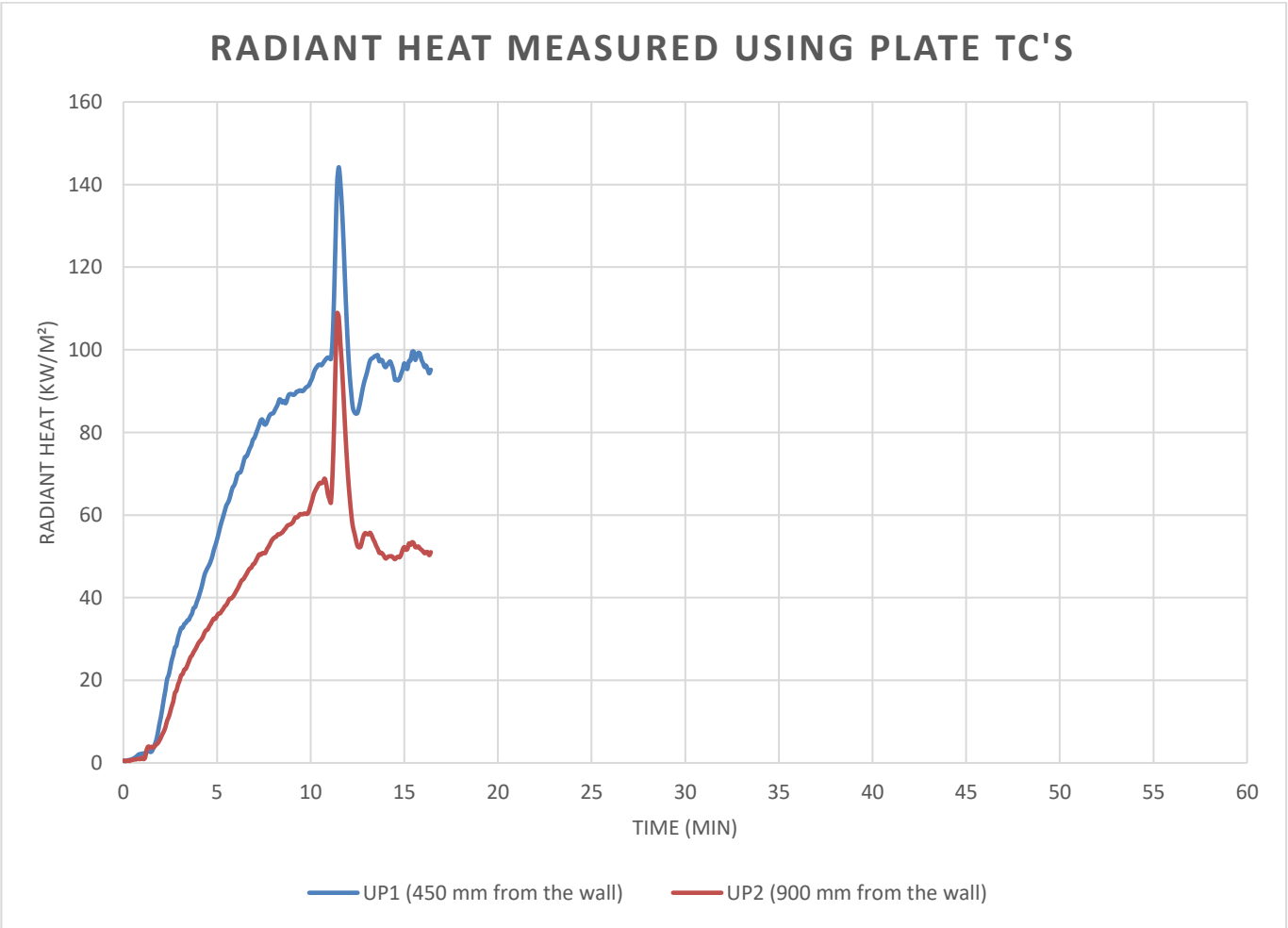

Data measurement from the steel C-section underneath 2nd floor

Layout

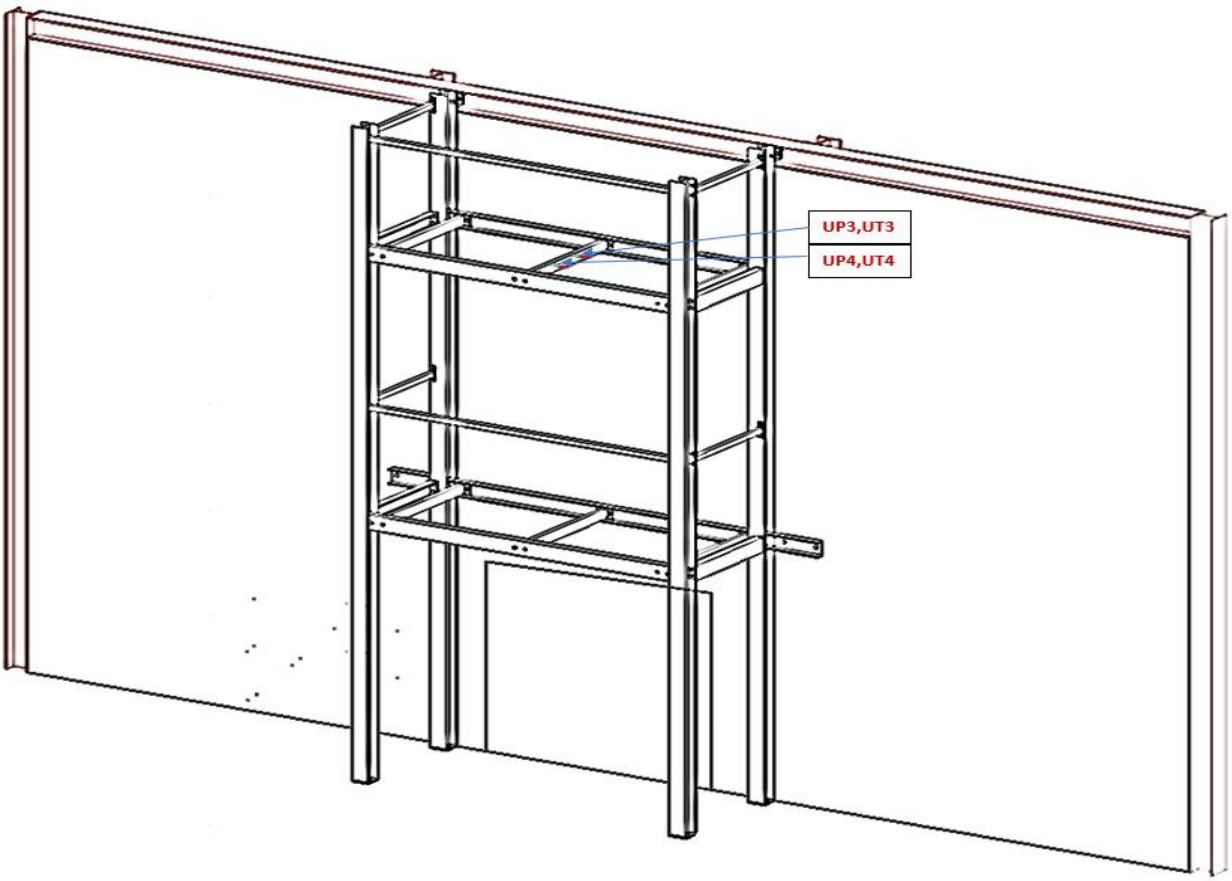

Temperature measured from the Plate TC's on the steel C-section underneath 2nd floor

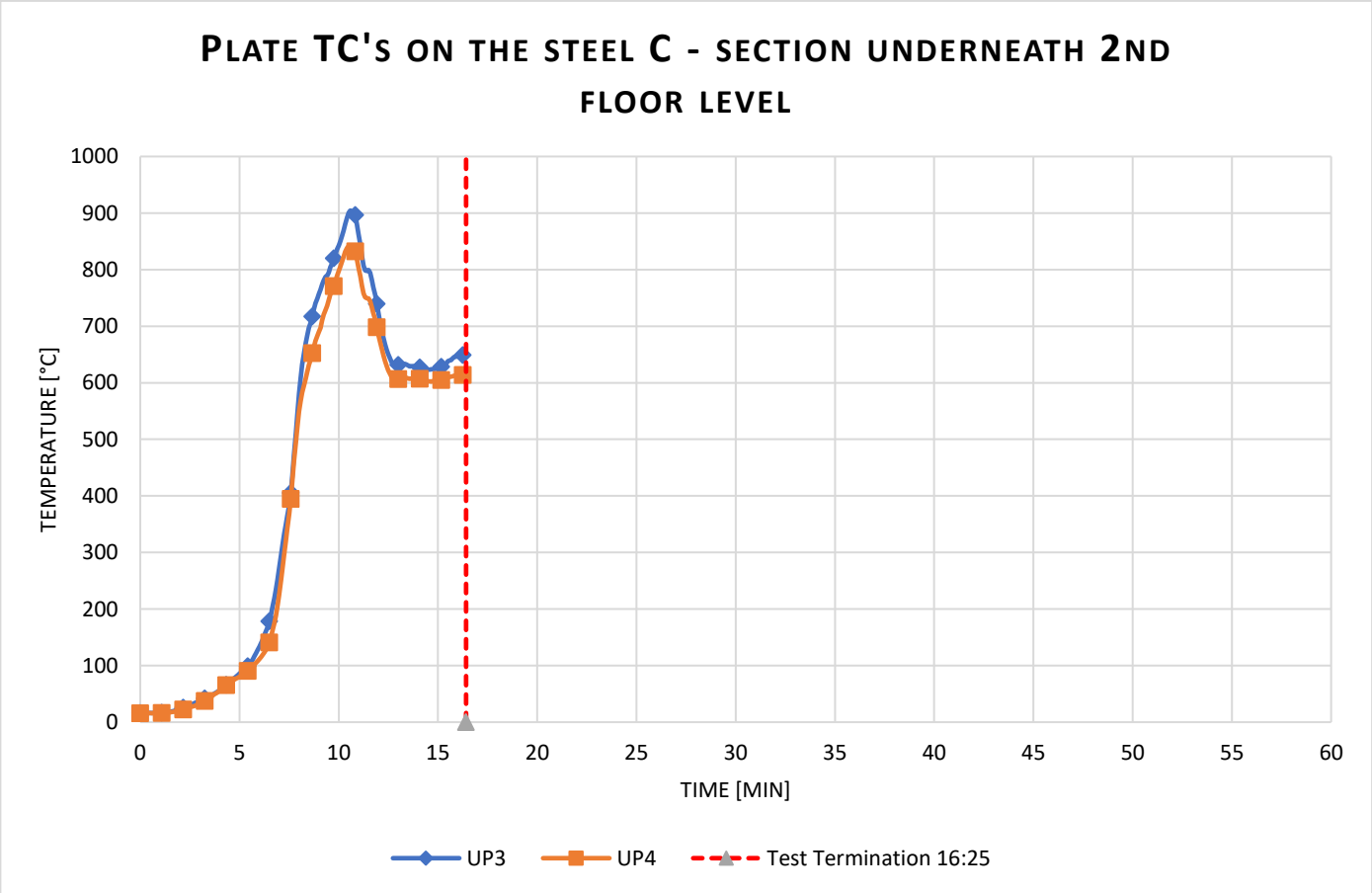

Temperature measured from the Inconels on the steel C-section underneath 2nd floor

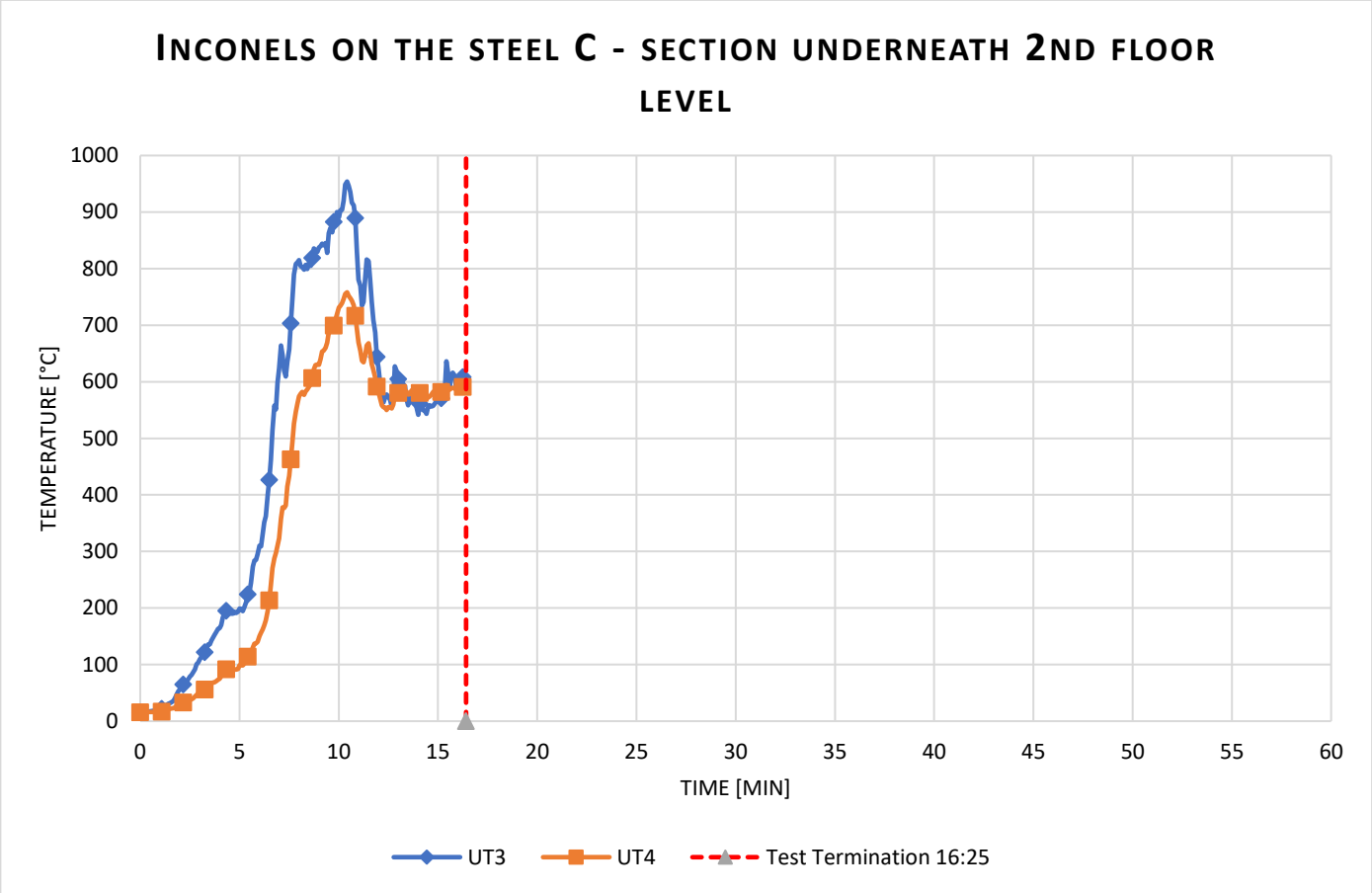

Radiant heat calculated from Plate TC's

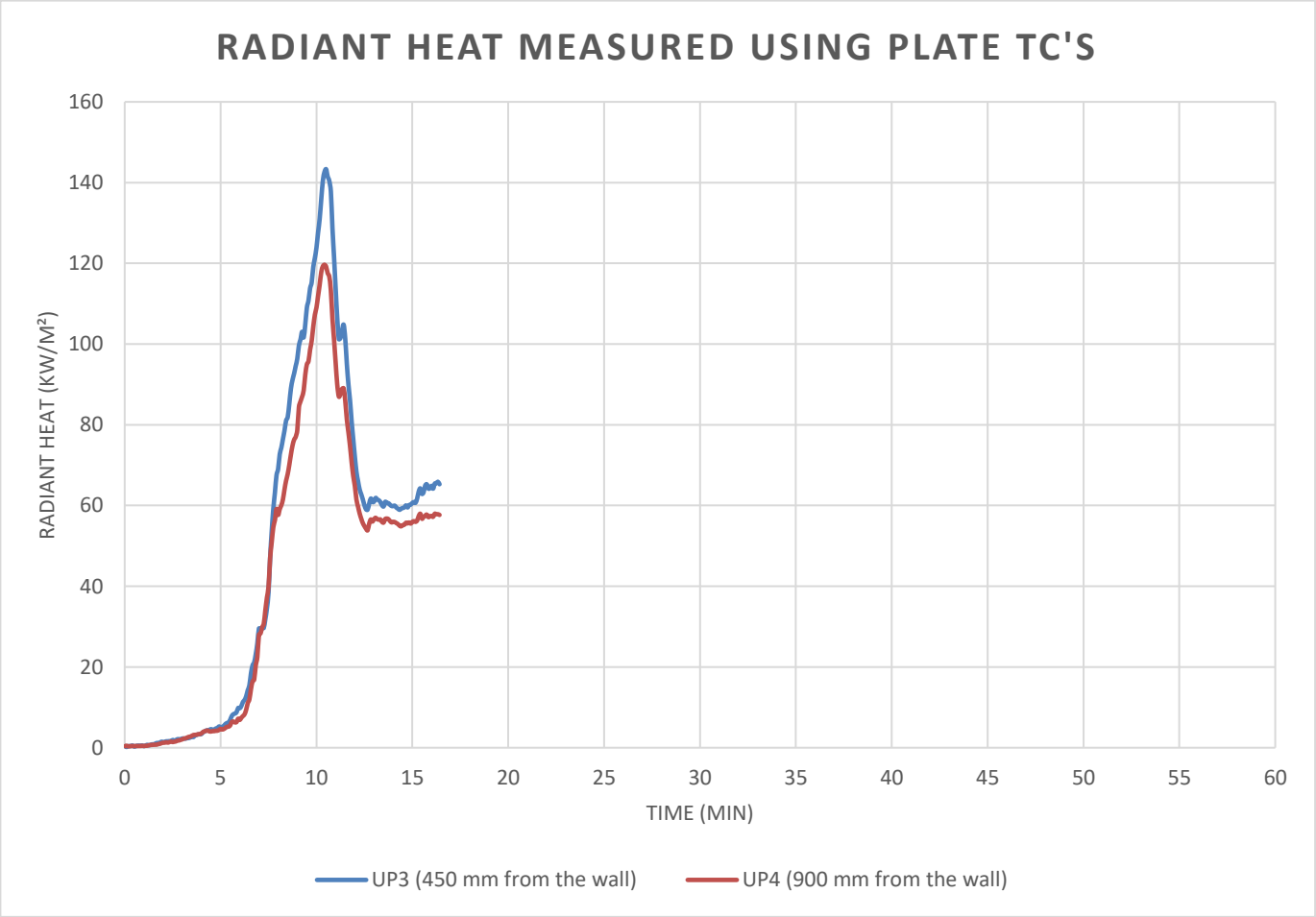

Data measurements from Inconels on side wall

Layout

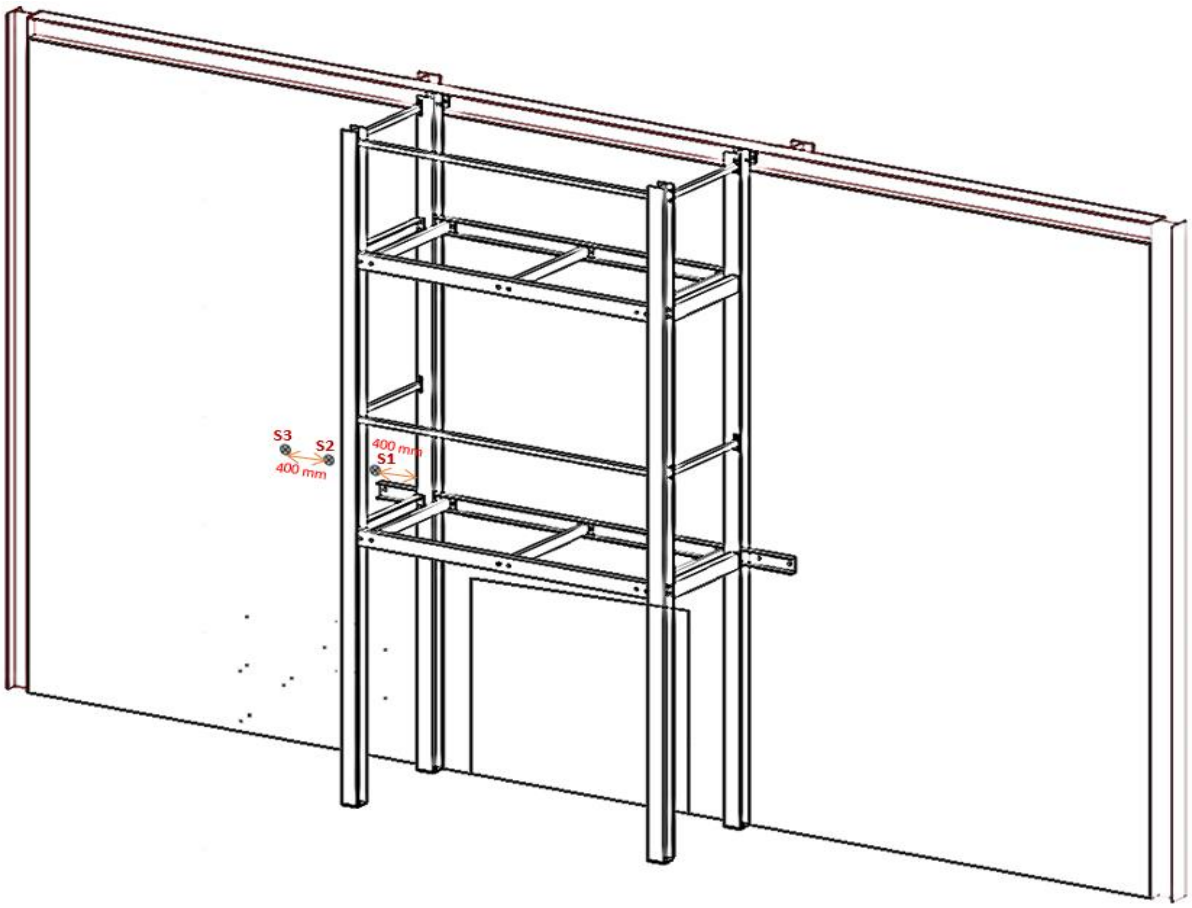

Temperature measured from the Inconels from the side wall – adjacent 1st floor level steel frame

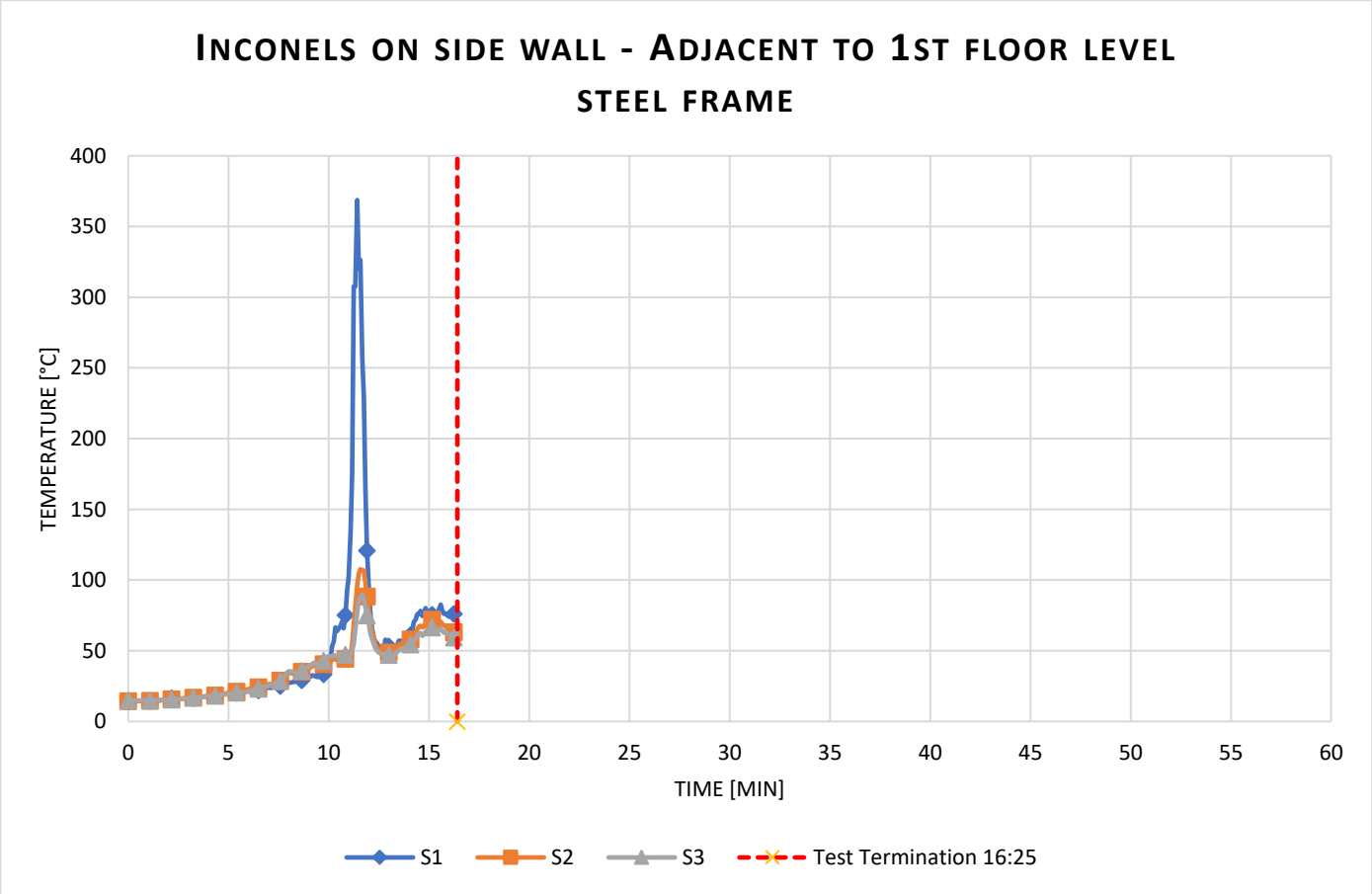

Data measurement from the Inconels on steel C - section

Layout

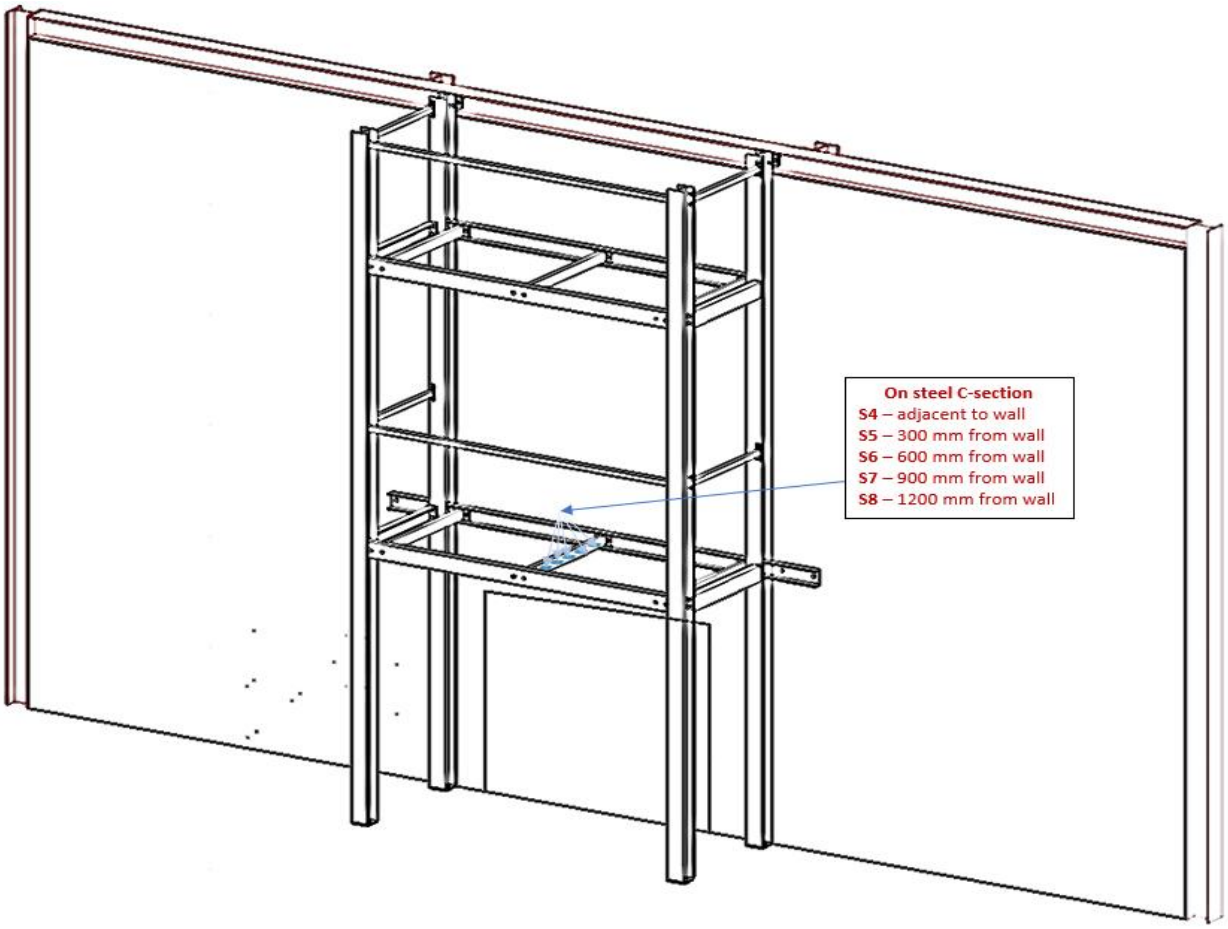

Temperature measured from the Inconels on steel C-section underneath 1st floor

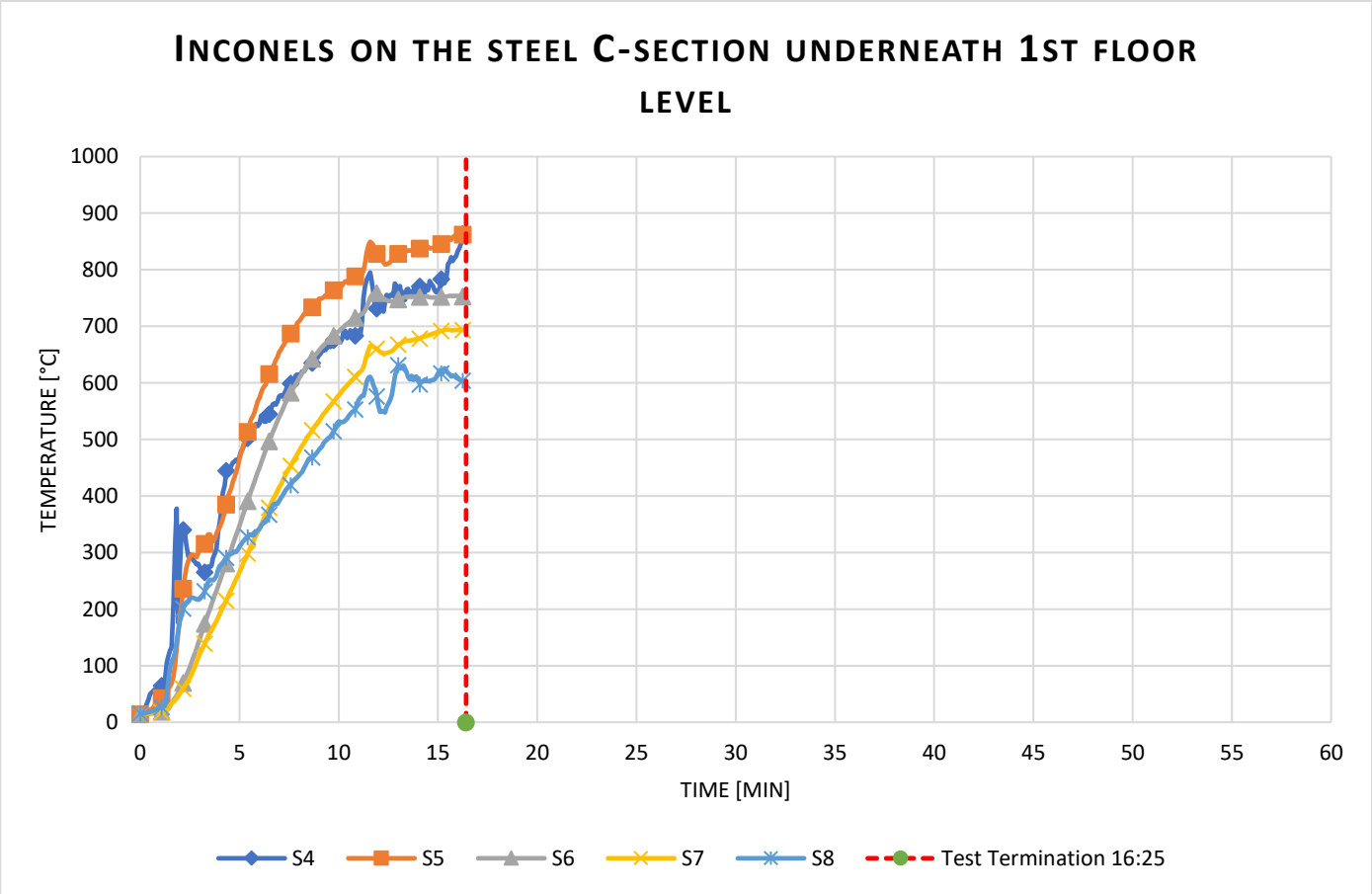

Data measurement from the Inconels facing crib (ground floor)

Layout

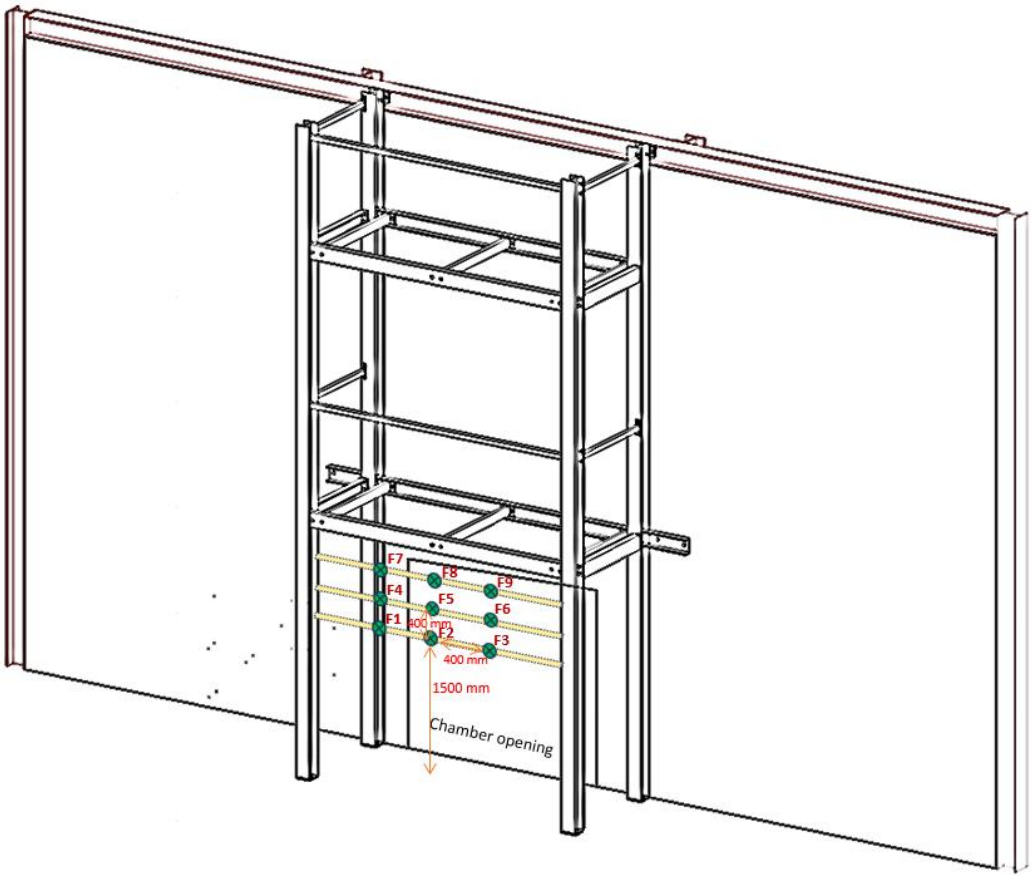

Temperature measured from the Inconels above the handrails facing the crib

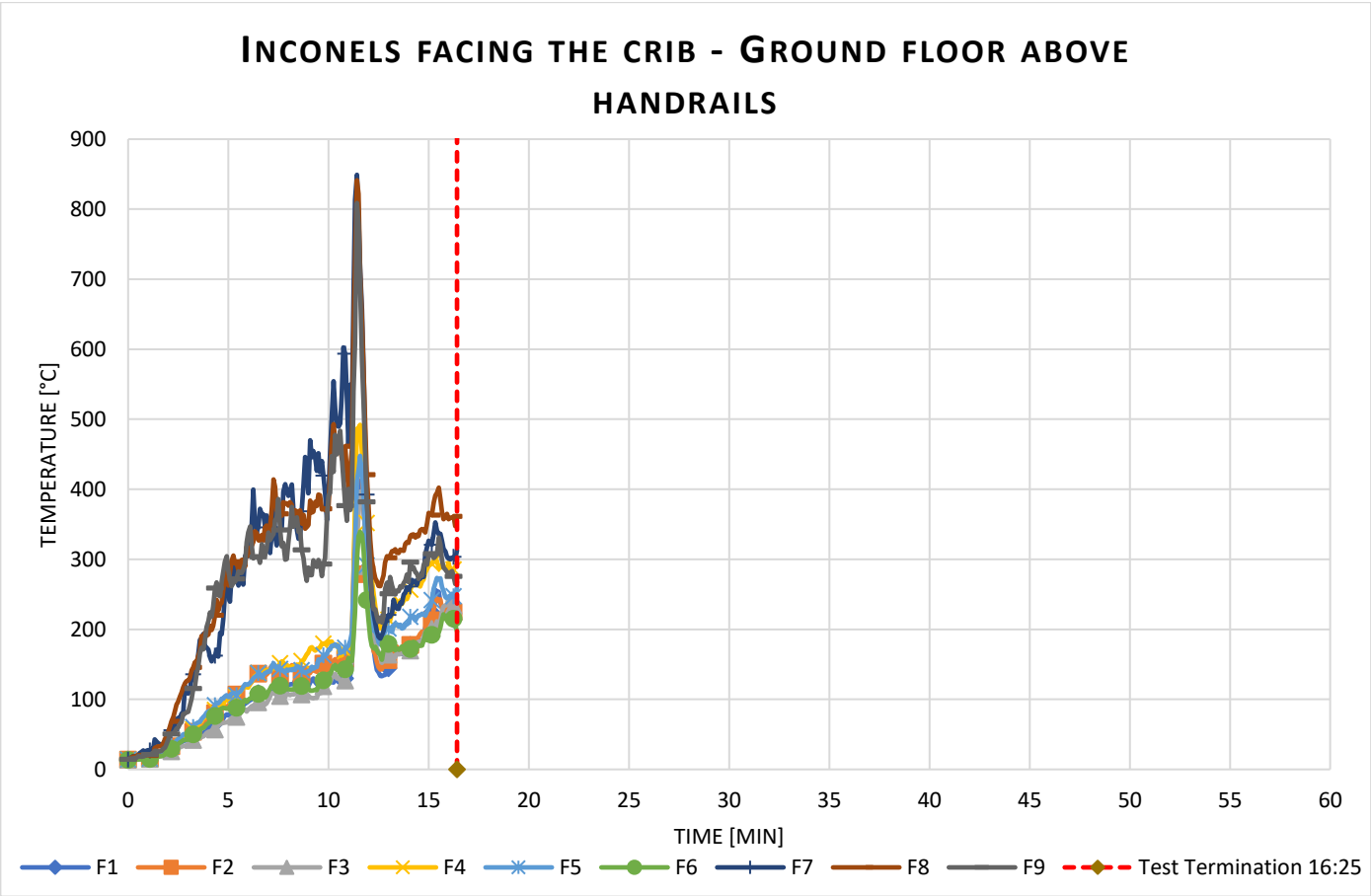

Data measurement from the Inconels on 1st floor

Layout

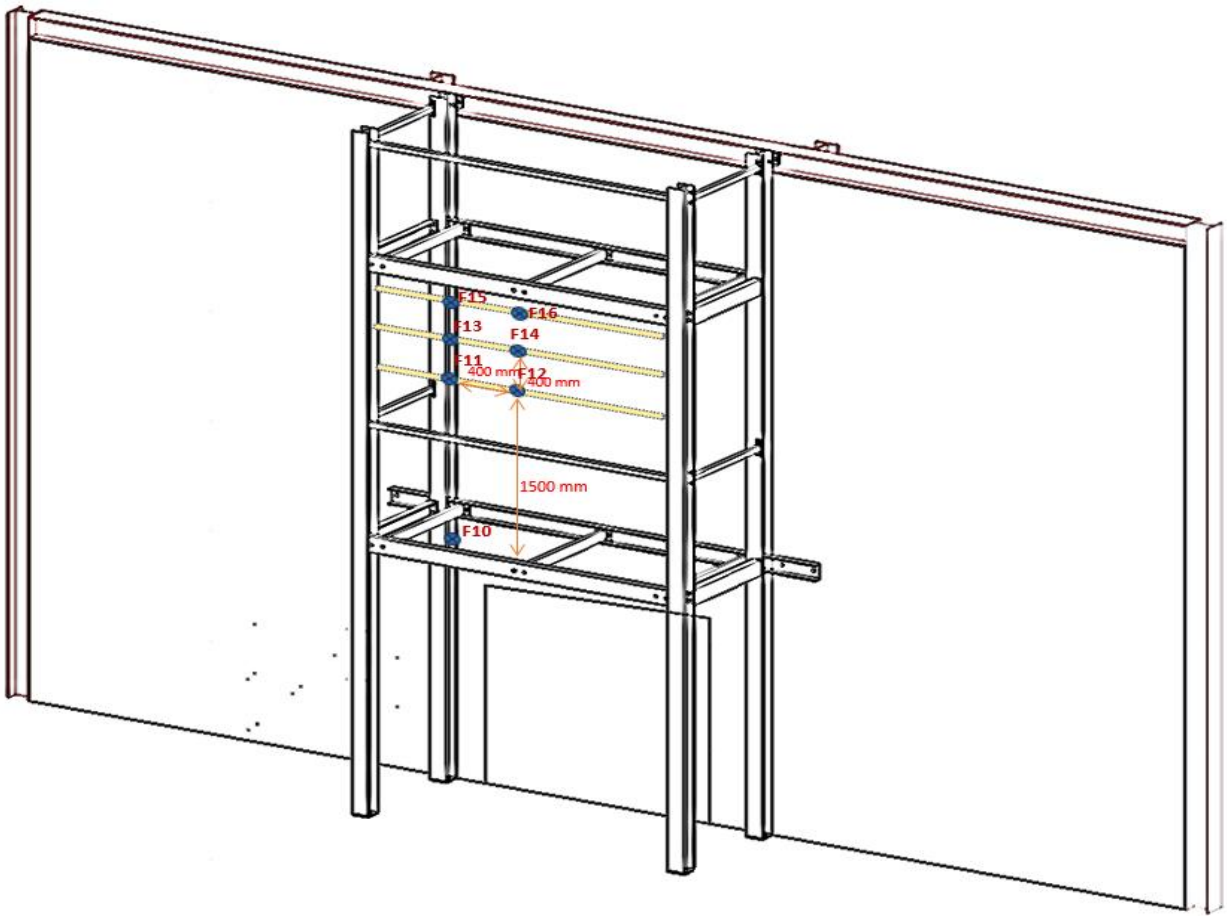

Temperature measured from the Inconels facing outwards on 1st floor on floor and above handrails

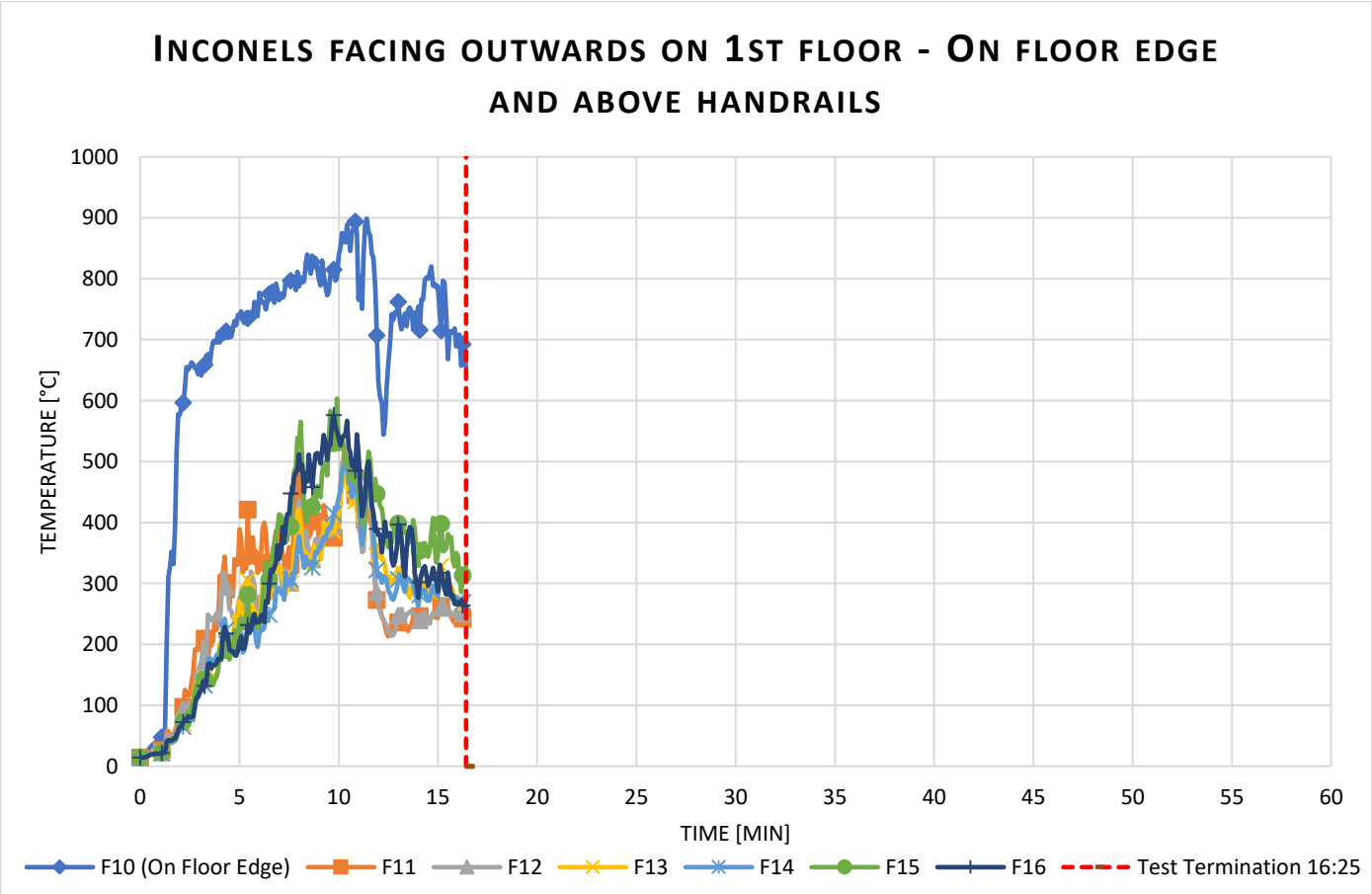

Data measurement from the Inconels on 2nd floor

Layout

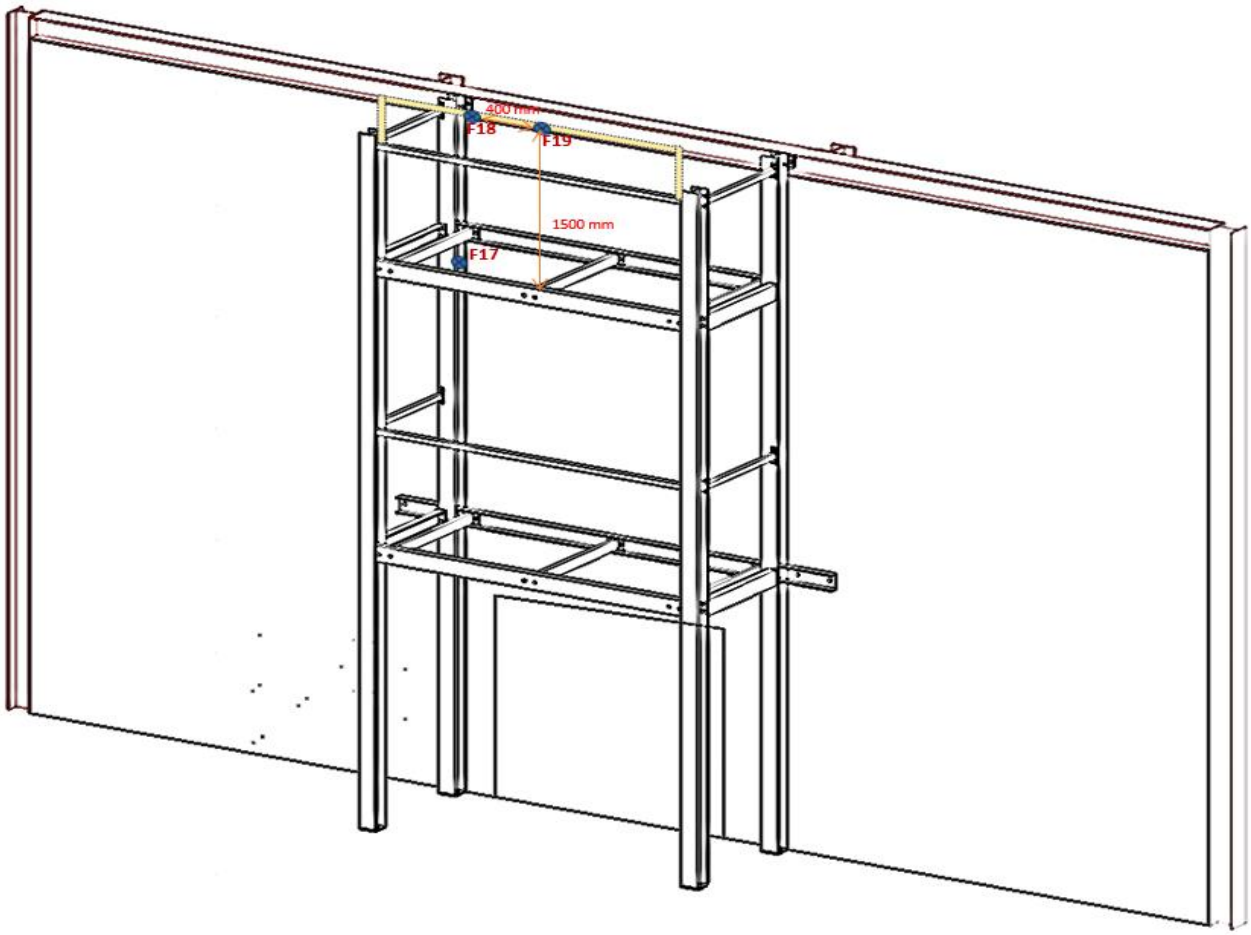

Temperature measured from the Inconels facing outwards on 2nd floor on floor and above handrails

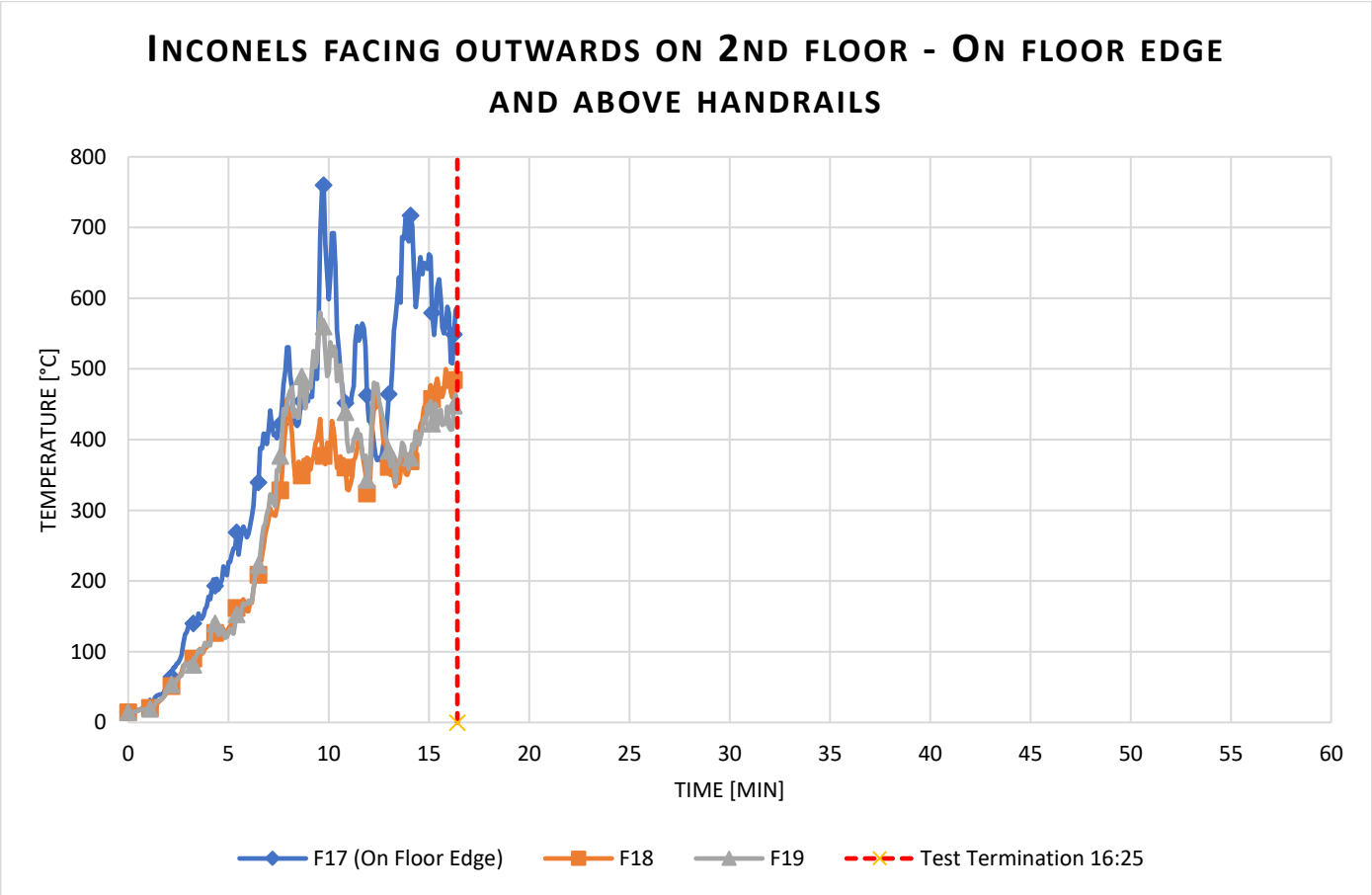

4. PICTURES TAKEN DURING THE TEST

0:03:04

0:03:04

END OF THE TEST

Test date: 13th of March 2024

Project Nr: EUI-23-000784

Test Nr: EUI-23-CHB-000784B

1. INSTRUMENTATION LAYOUT

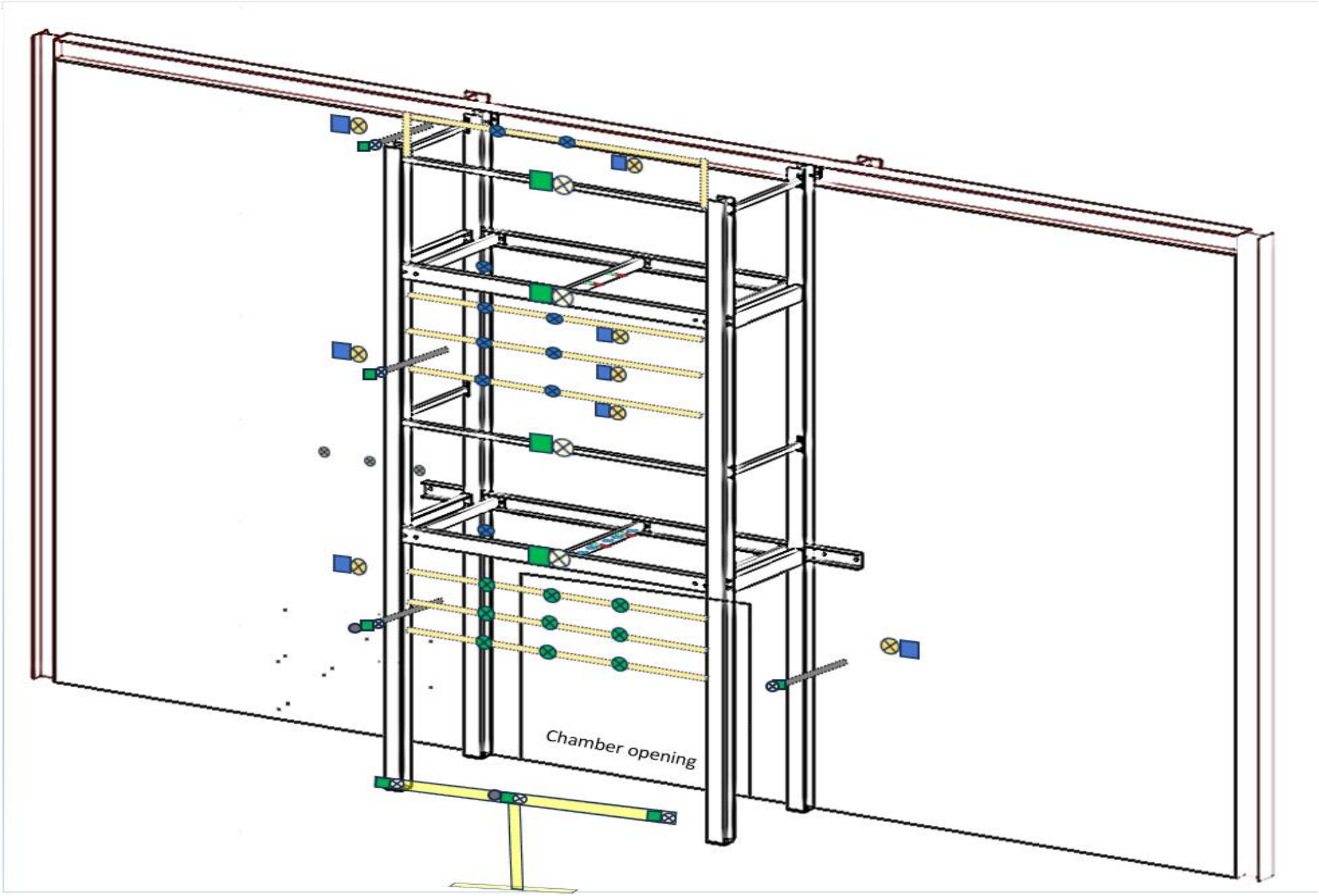

Plate TC on exposed face

Inconel TC on exposed face

Inconel TC on wall

Plate TC on wall

Heat flux meter

2x Plate TC's underside the Balcony floor –
At 450 mm and 900 mm from the wall

2x Inconel TC's underside the Balcony floor –
At 450 mm and 900 mm from the wall

3m long TC facing outwards,
extends out by 50 mm

TC on the steel C-section
S4 – exposed edge of wall
S5 – 300mm away from the wall
S6 – 600mm away from the wall
S7 – 900mm away from the wall
S8 – 1200mm away from the wall

3m long TC facing the crib,
extends out by 50 mm

Nomenclature:

The first word of each acronym is to identify their position:

G - Ground floor

S – Side edge to the chamber opening

M – Middle floor

T – Top floor

F – Front facing Inconels

The second word denotes the instrument:

Fluxmeter (R), Plate TC (P), Inconel (T)

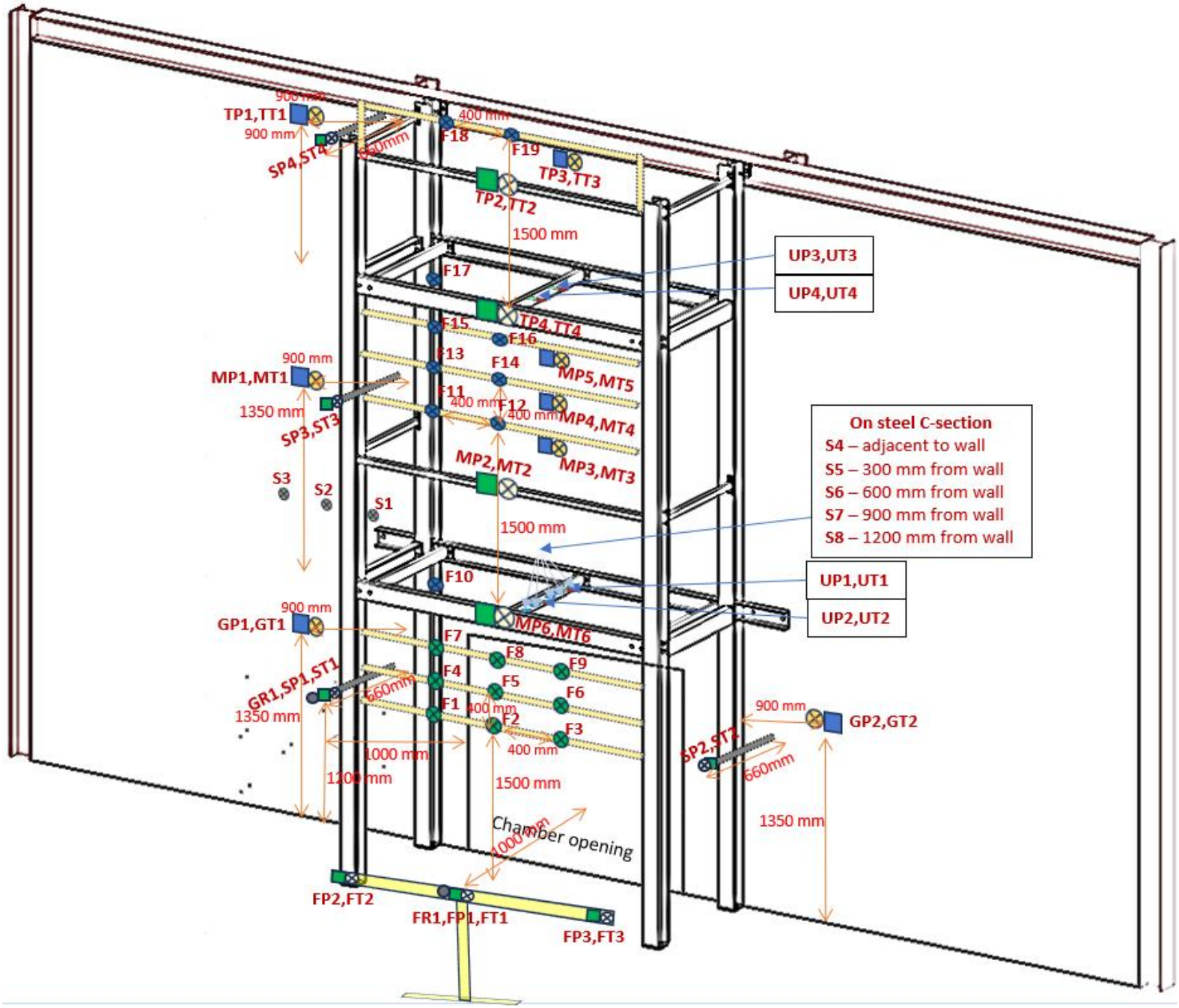
TP1,TT1
900 mm
SP4,ST4
660mm
400 mm
F18
F19
TP3,TT3
TP2,TT2
1500 mm
F17
UP3,UT3
UP4,UT4
TP4,TT4
F15
F16
F13
F14
MP5,MT5
MP1,MT1
F11
F12
MP4,MT4
1350 mm
SP3,ST3
MP3,MT3
MP2,MT2
S3
S2
S1
On steel C-section
S4 – adjacent to wall
S5 – 300 mm from wall
S6 – 600 mm from wall
S7 – 900 mm from wall
S8 – 1200 mm from wall
F10
UP1,UT1
UP2,UT2
GP1,GT1
MP6,MT6
F7
F8
F9
F4
F5
F6
GR1,SP1,ST1
F1
F2
F3
GP2,GT2
SP2,ST2
1000 mm
1200 mm
Chamber opening
FP2,FT2
FR1,FP1,FT1
FP3,FT3

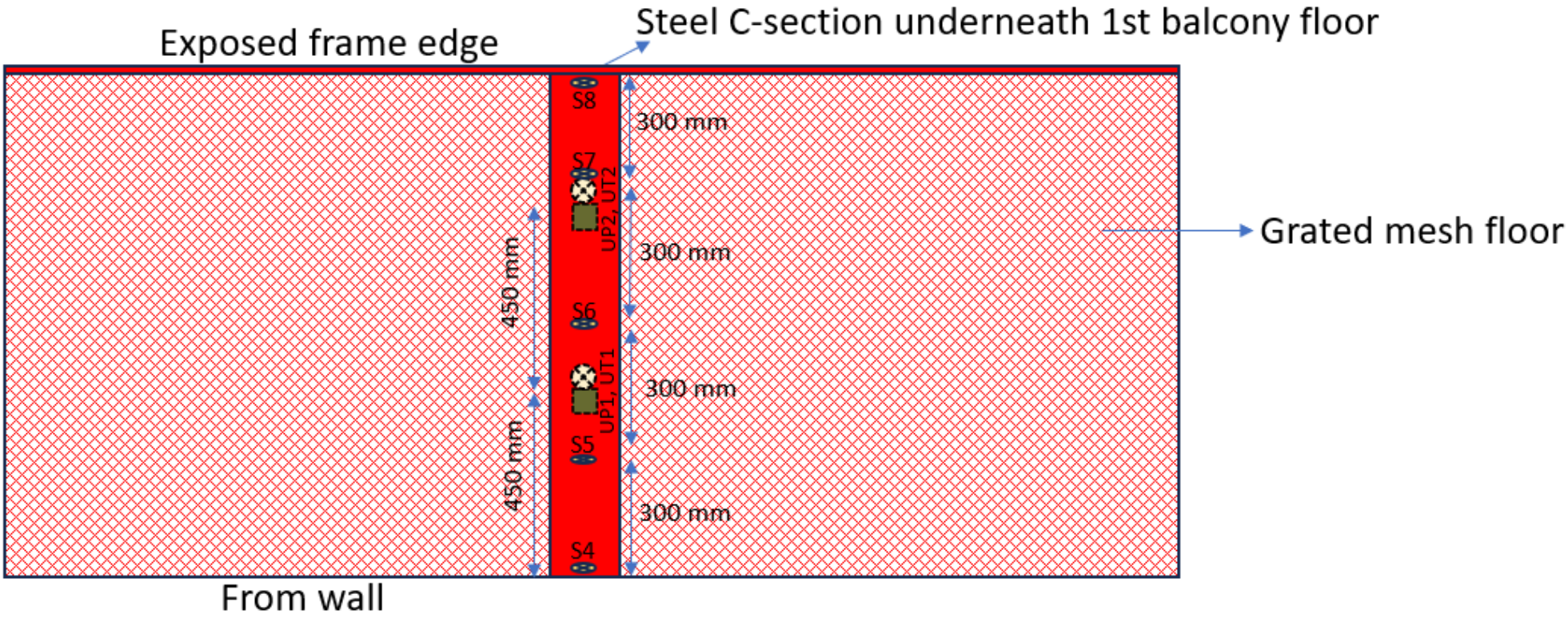

S4 – 10 mm from the wall on Steel C section to measure steel temperature
S5 – 300 mm from the wall on Steel C section to measure steel temperature
S6 – 600 mm from the wall on Steel C section to measure steel temperature
S7 – 900 mm from the wall on Steel C section to measure steel temperature
S8 – 1200 mm from the wall on Steel C section to measure steel temperature

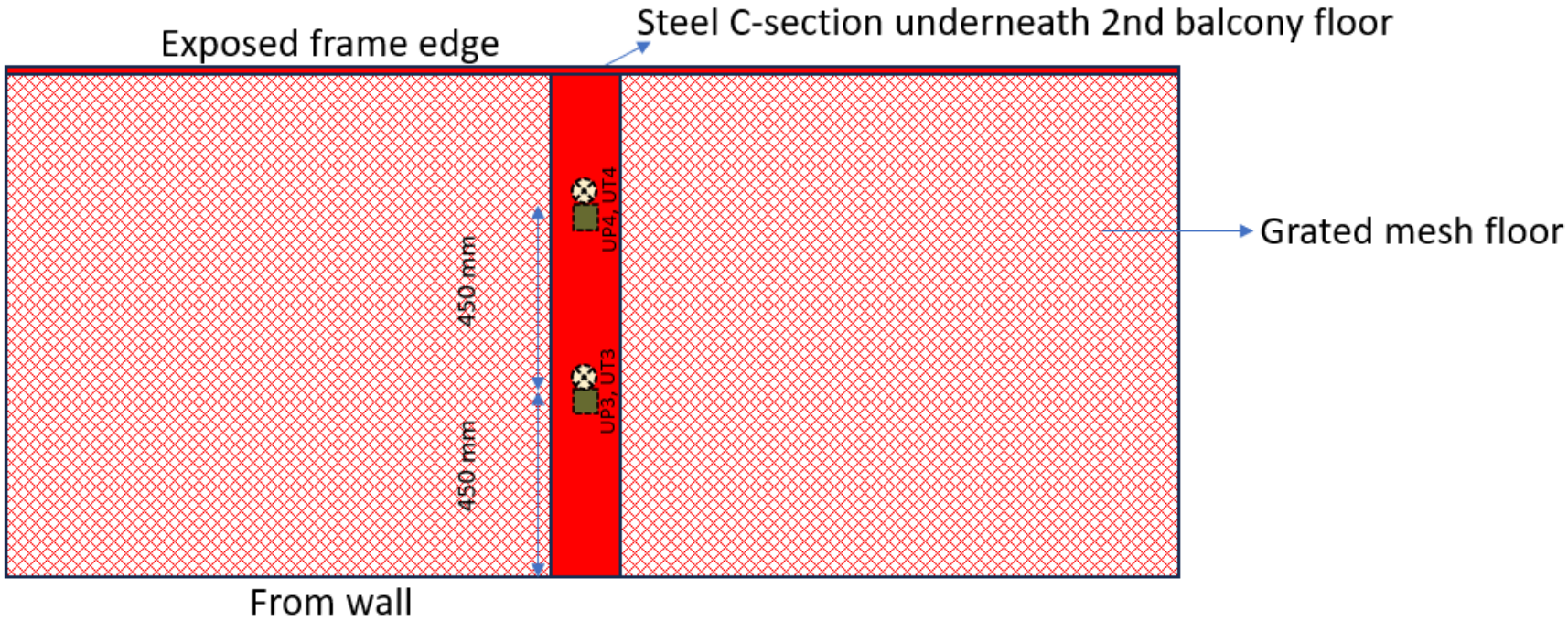
Exposed frame edge
Steel C-section underneath 2nd balcony floor
Grated mesh floor
450 mm
450 mm
UP4, UT4
UP3, UT3
From wall

Figure 1: Elevation view of the system during build.

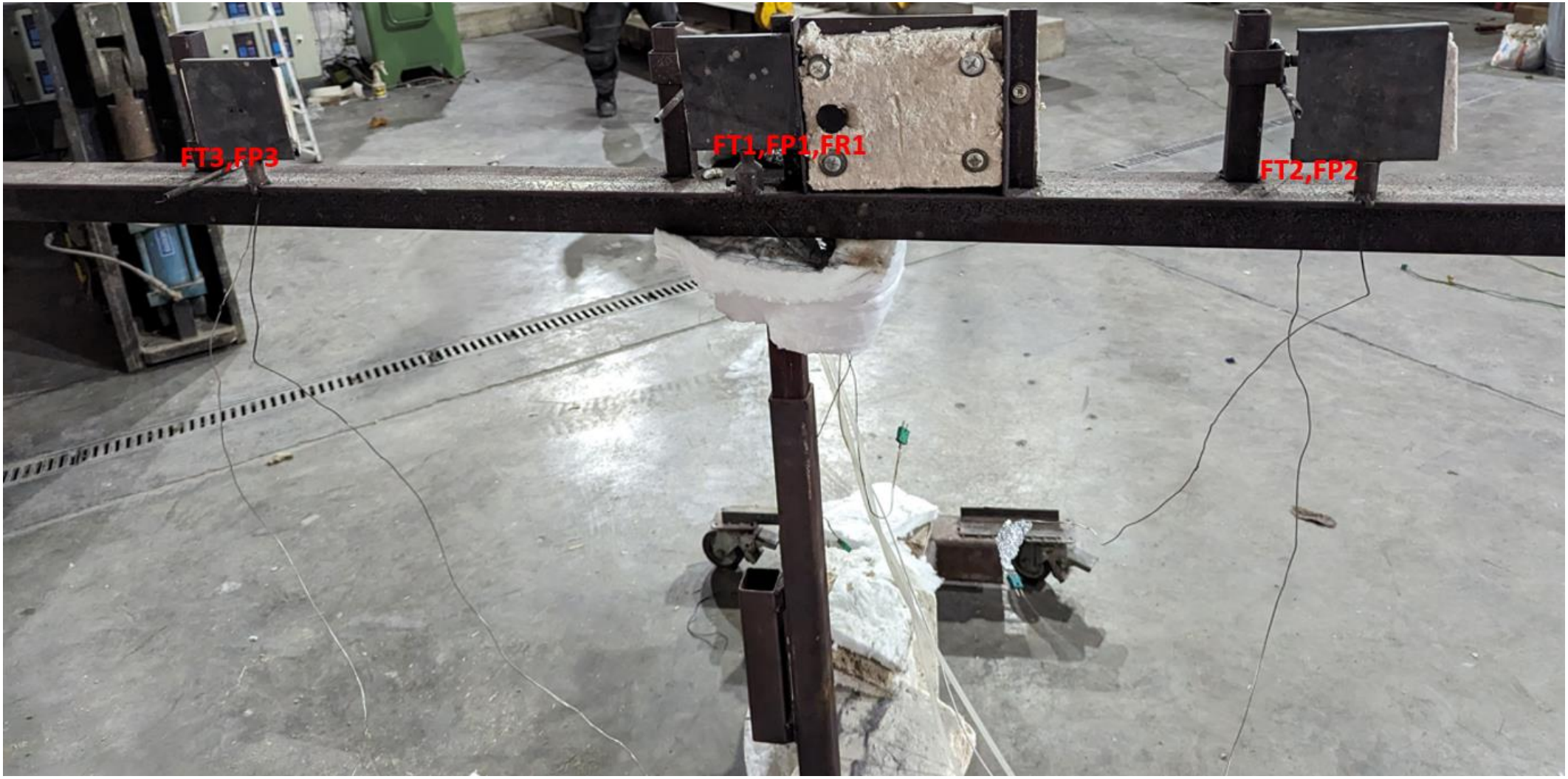

Figure 2: The front facing Fluxmeter, Plate TC's and Inconels (placed 1m away from the target crib hypothetical position).

2. VISUAL OBSERVATIONS DURING THE TEST

Time from ignition (min:sec)	***Observation***
00:00	**Ignition of crib.**
00:40	Flames out of combustion chamber
00:50	Flames impinge on the 1st level soffit panels.
01:24	Flames impinge on the 1st floor HPL panels.
02:10	Delamination of the decorative coating was noticed on the 1st floor main face panels.
03:05	Delamination of the decorative coating was noticed on the 1st floor side face panels.
03:39	Flames on HPL panels noticed.
04:54	Falling debris.
07:35	Timber decking on 1st floor on flames.
08:05	Flames starts to impinge on 2nd floor soffit panels.
10:18	Flaming debris.
10:39	2nd floor HPL panels on flames
11:13	HPL panels at ground floor on flames.
11:55	Timber decking at ground floor on flames.
12:50	Flaming debris.
13:20	Falling debris
13:54	Falling debris
16:26	Falling debris
16:42	HPL panels from 1st floor starts to fall off from the system – Main face.
17:15	Flaming debris
20:18	HPL panels from 1st floor starts to fall off from the system – Side face.
20:54	Flames noticed on the 2nd timber decking.
23:30	Wood crib starts to collapse.
25:43	HPL panels starts to fall off from the system – Ground floor.
30:25	Ground floor and 1st floor main face now completely exposed – All the HPL panels installed have fallen off.
34:18	Flames noticed on the 2nd floor decking and HPL panels.
37:26	Falling debris
38:23	Falling debris.
44:55	Falling debris.
47:37	Soffit installed underside 1st floor level falls off from the system – Right side.
50:00	Nothing New to Report
55:00	Nothing New to Report.
56:22	Falling debris.
60:00	**End of the Test.**

3. DATA RESULTS

Heat Release rate (Hood)

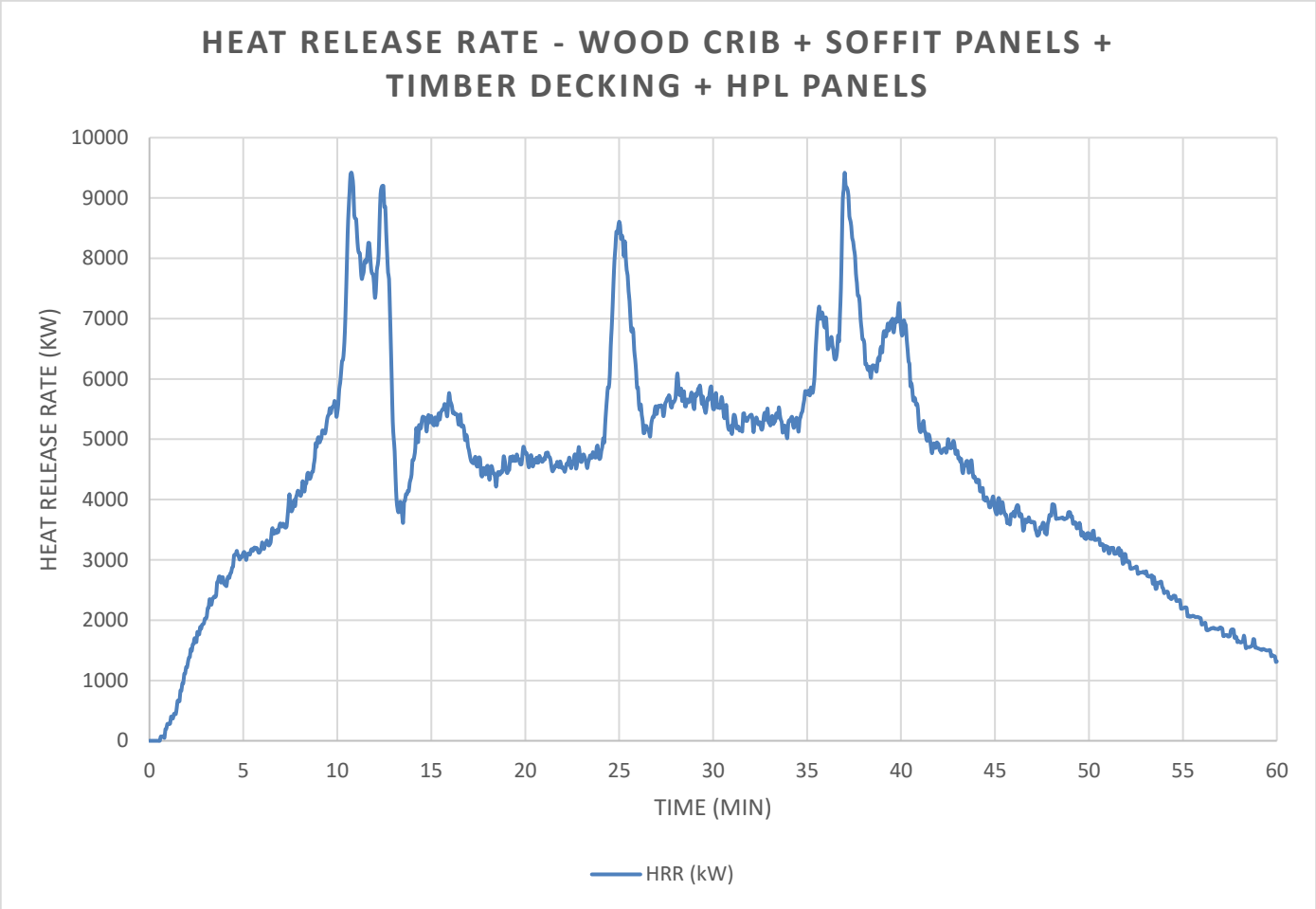

Mass loss

No Mass loss was recorded during this test.

Data measurement at 1m from target crib

Layout

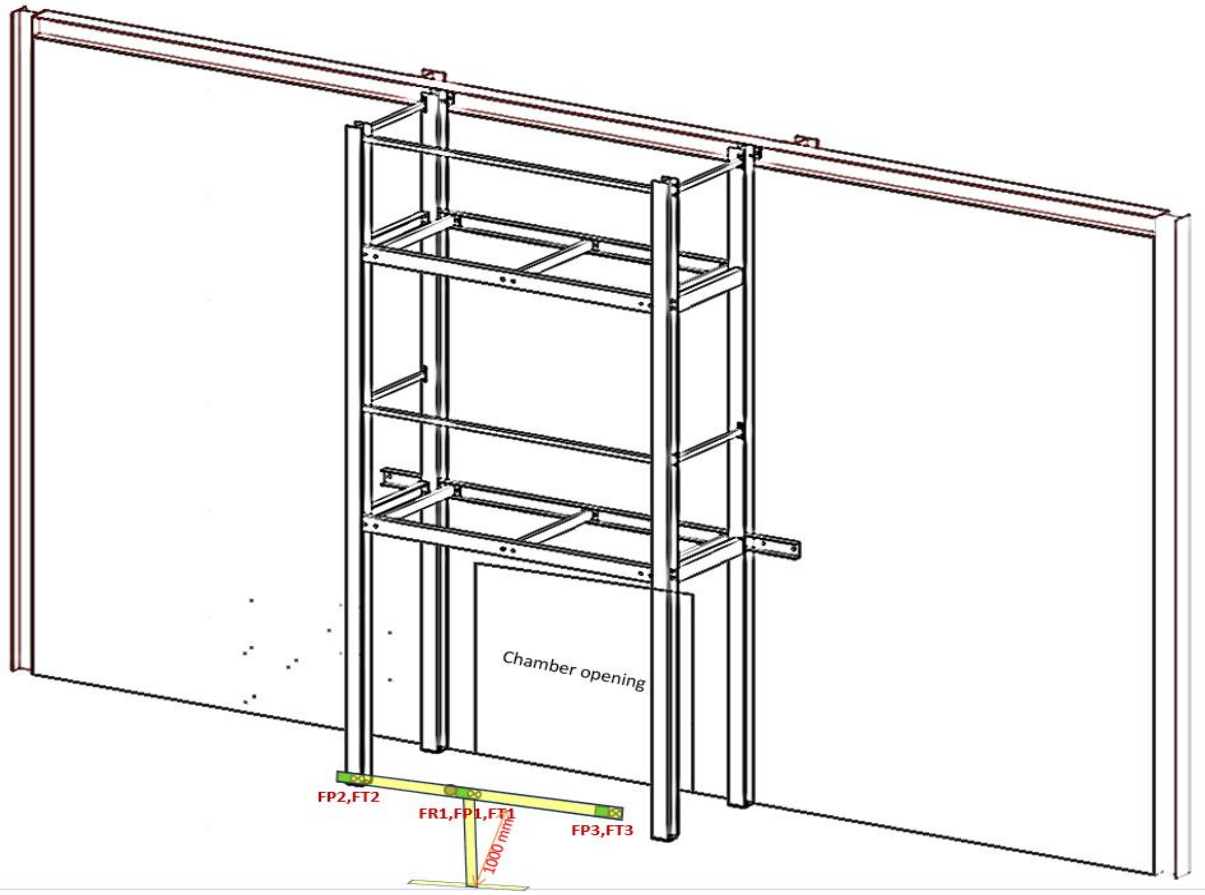

Radiant heat at 1m from target crib

The radiant heat was measured using a water cooled Gardon Guage sensor of range 100 kW/m²:

The heat flux meter was located at 1000 mm from the target crib hypothetical position at mid-height of the wood crib.

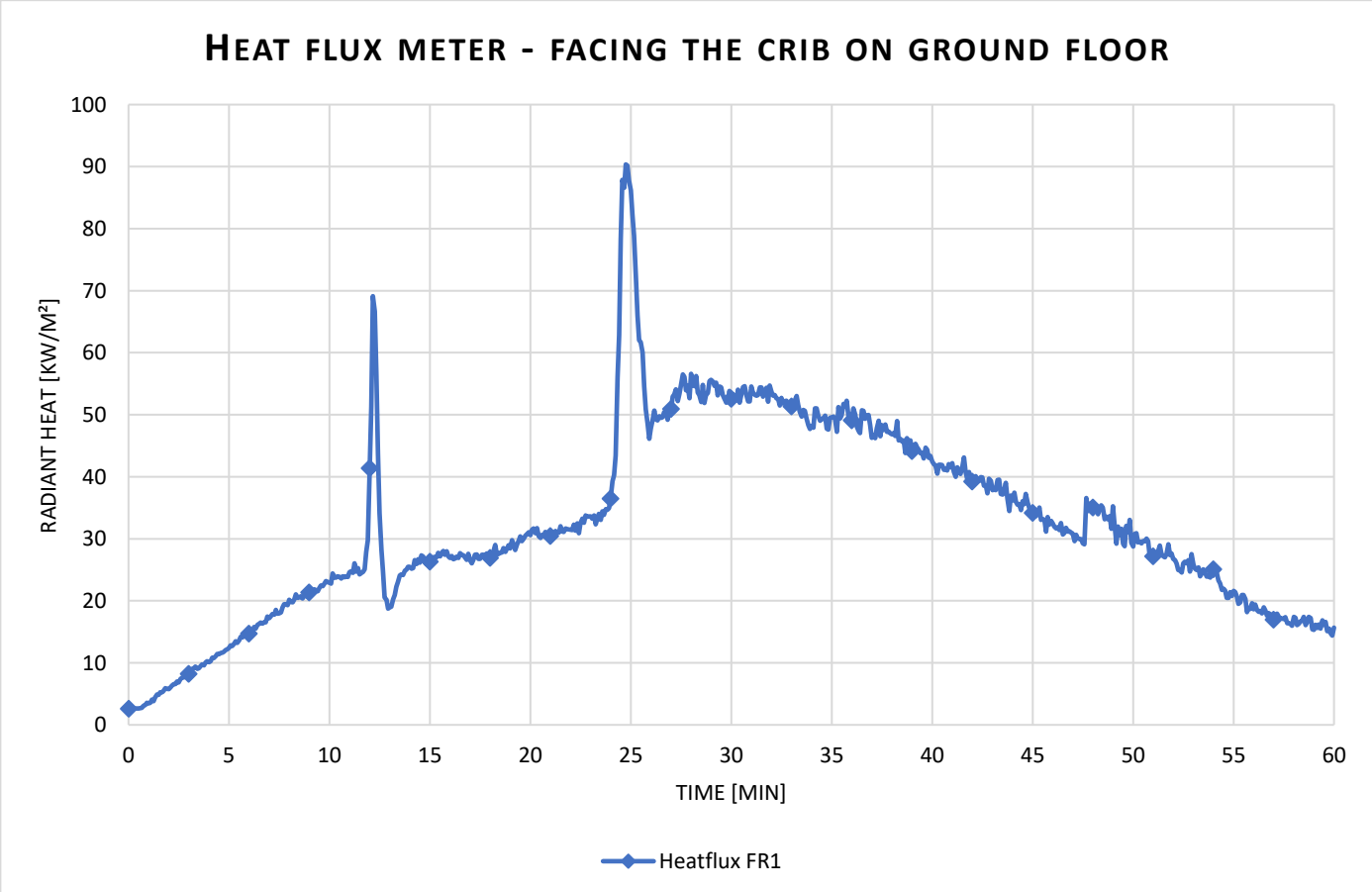

Temperature measured by plate TC's at 1m away from target crib

Ø 1.5 mm mineral insulated thermocouples were placed 1m from the target crib at mid height of wood crib spaced by 500 mm from the centre point ofthe crib. The installation included 3x Inconel thermocouple and 3x plate thermocouples.

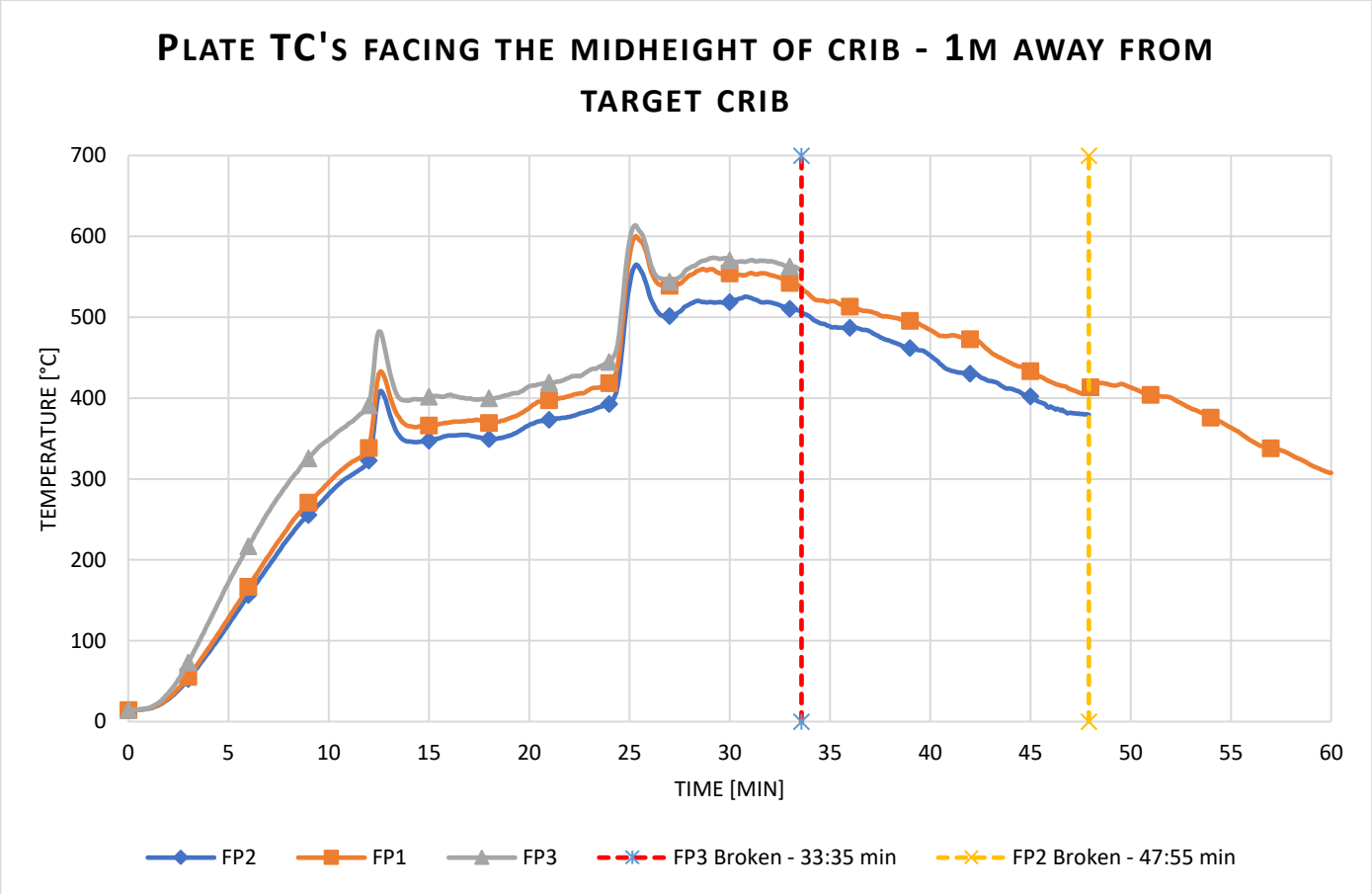

Temperature measured by Inconels at 1m away from crib

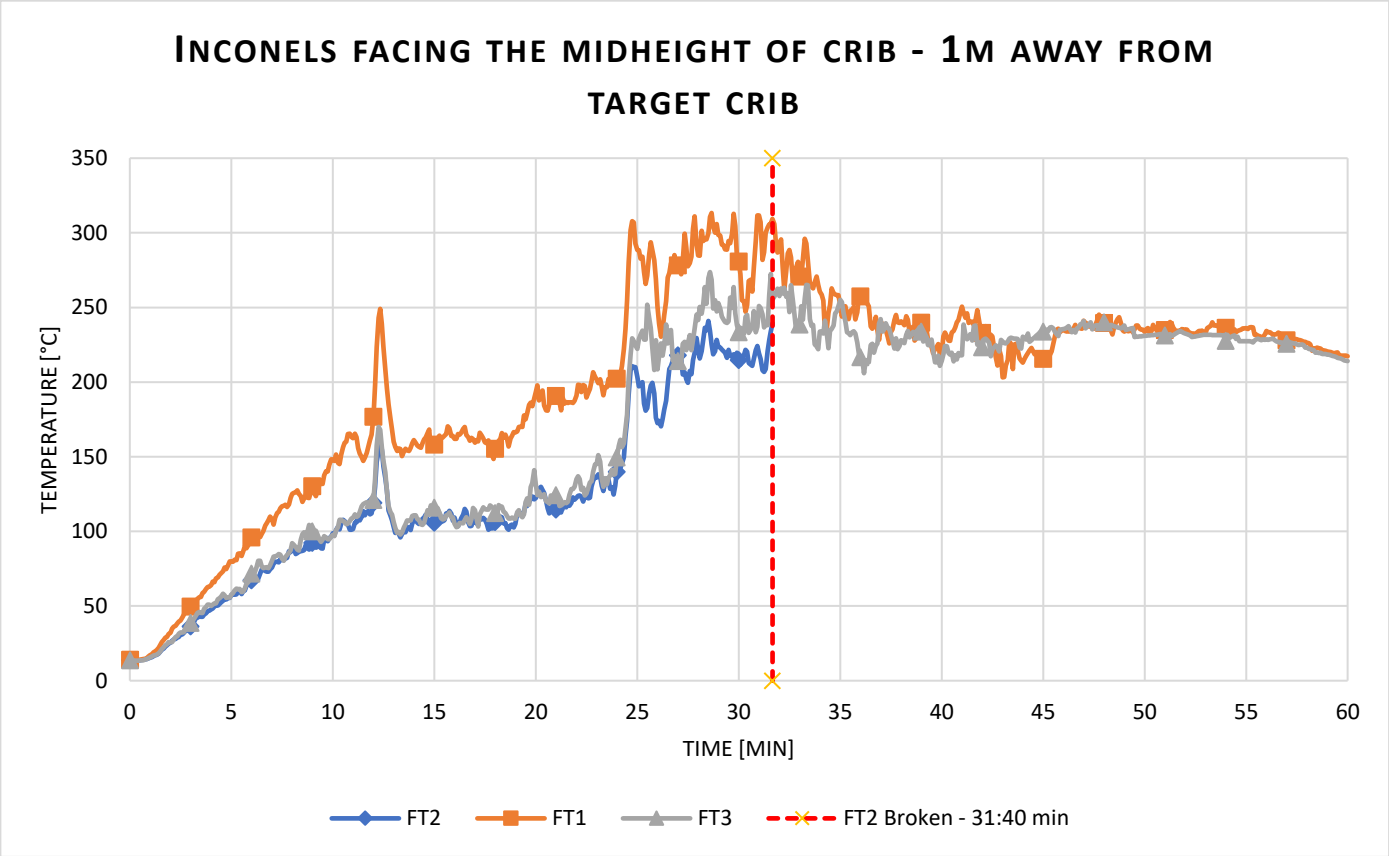

Radiant heat calculated from Plate TC

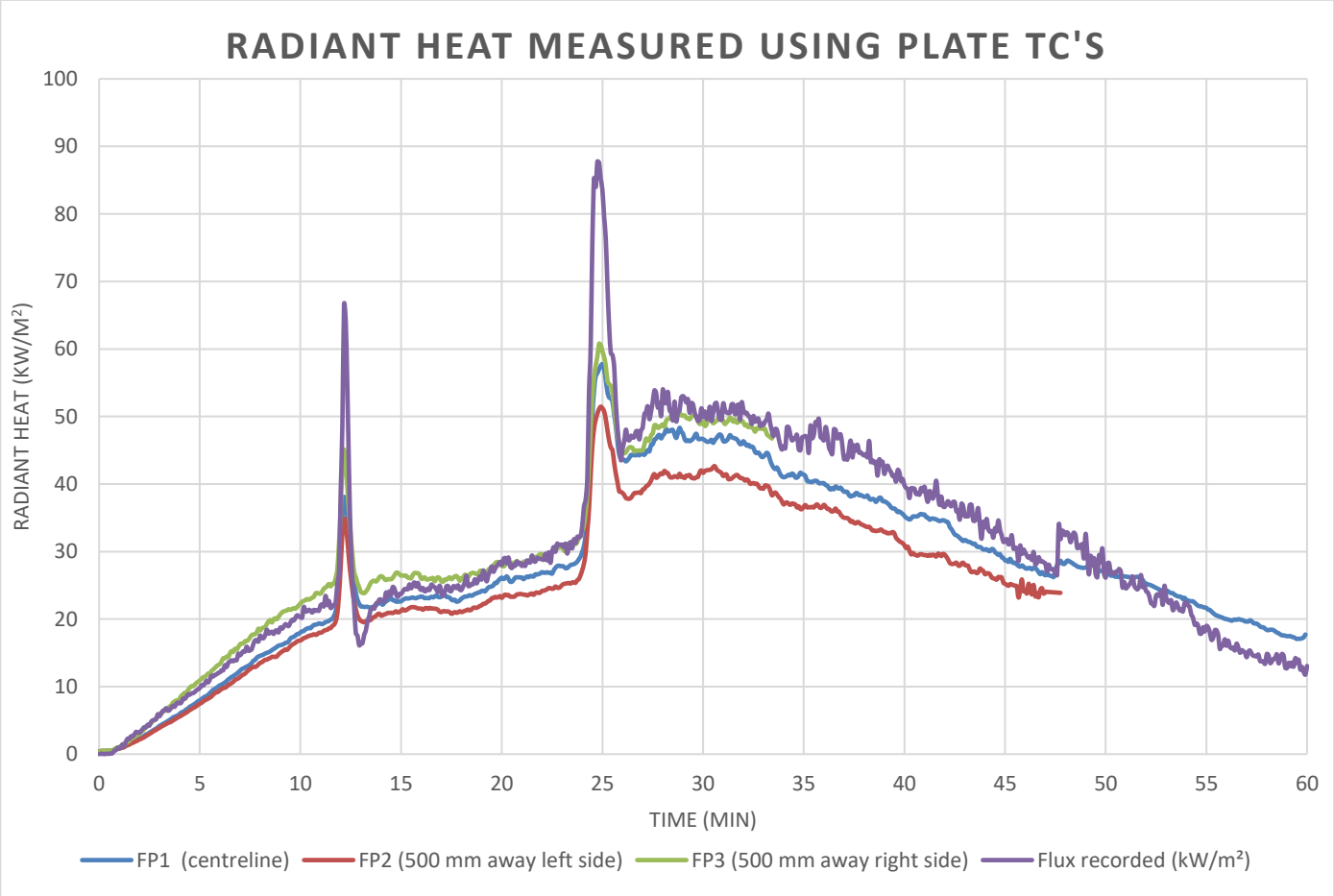

Data measurement from side edges on Ground Floor (660 mm from wall).

Layout

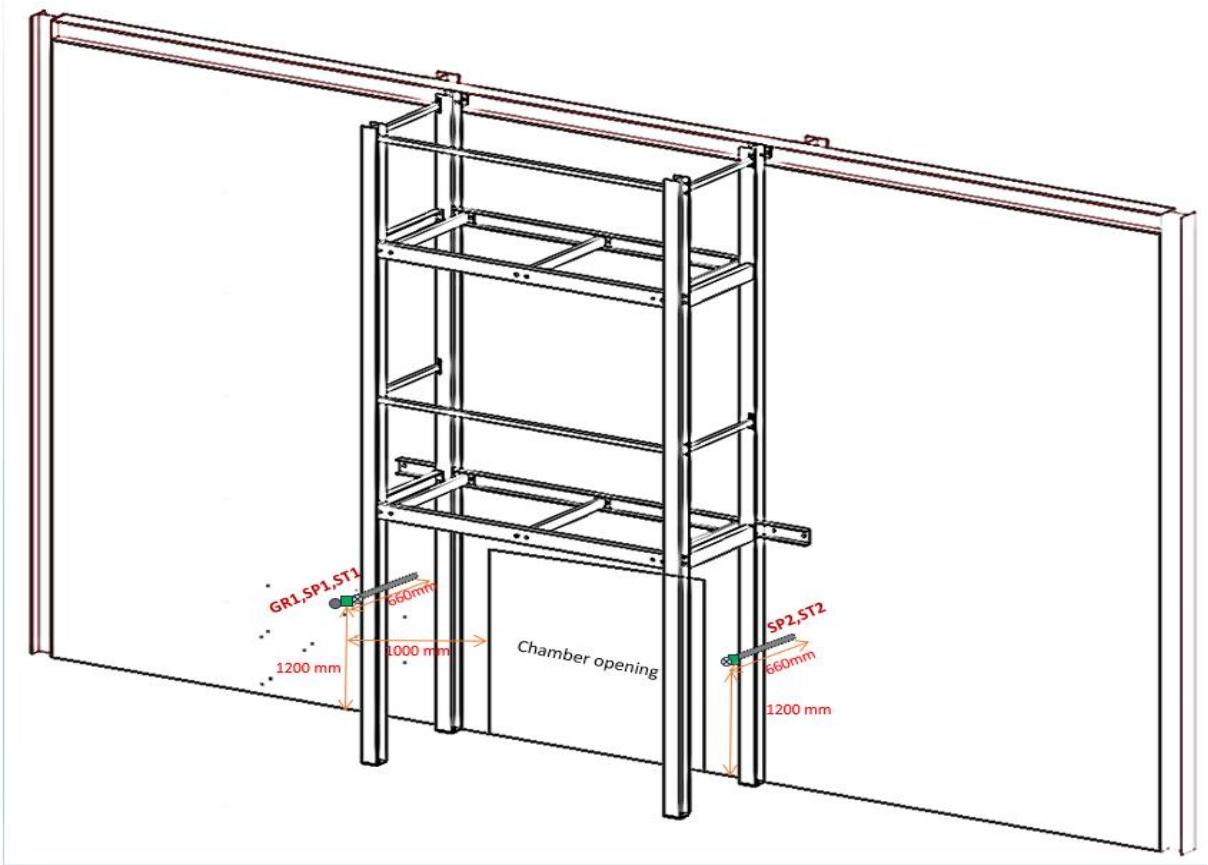

Radiant heat from the flux meter on side edge (660 mm from wall)

The radiant heat was measured using a water cooled Gardon Guage sensor of range 100 kW/m²:

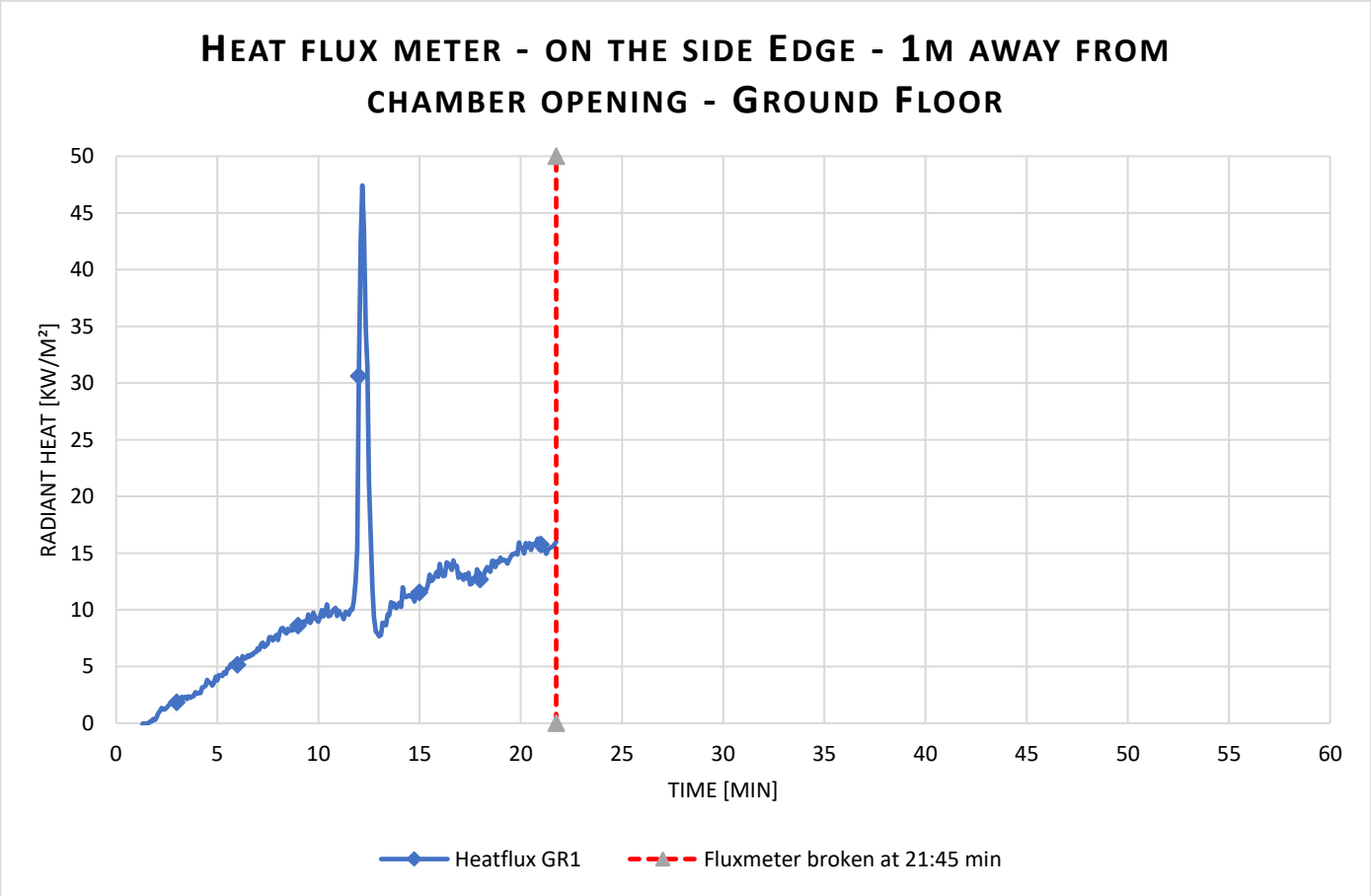

Temperature measured using plate TC's on the side edge

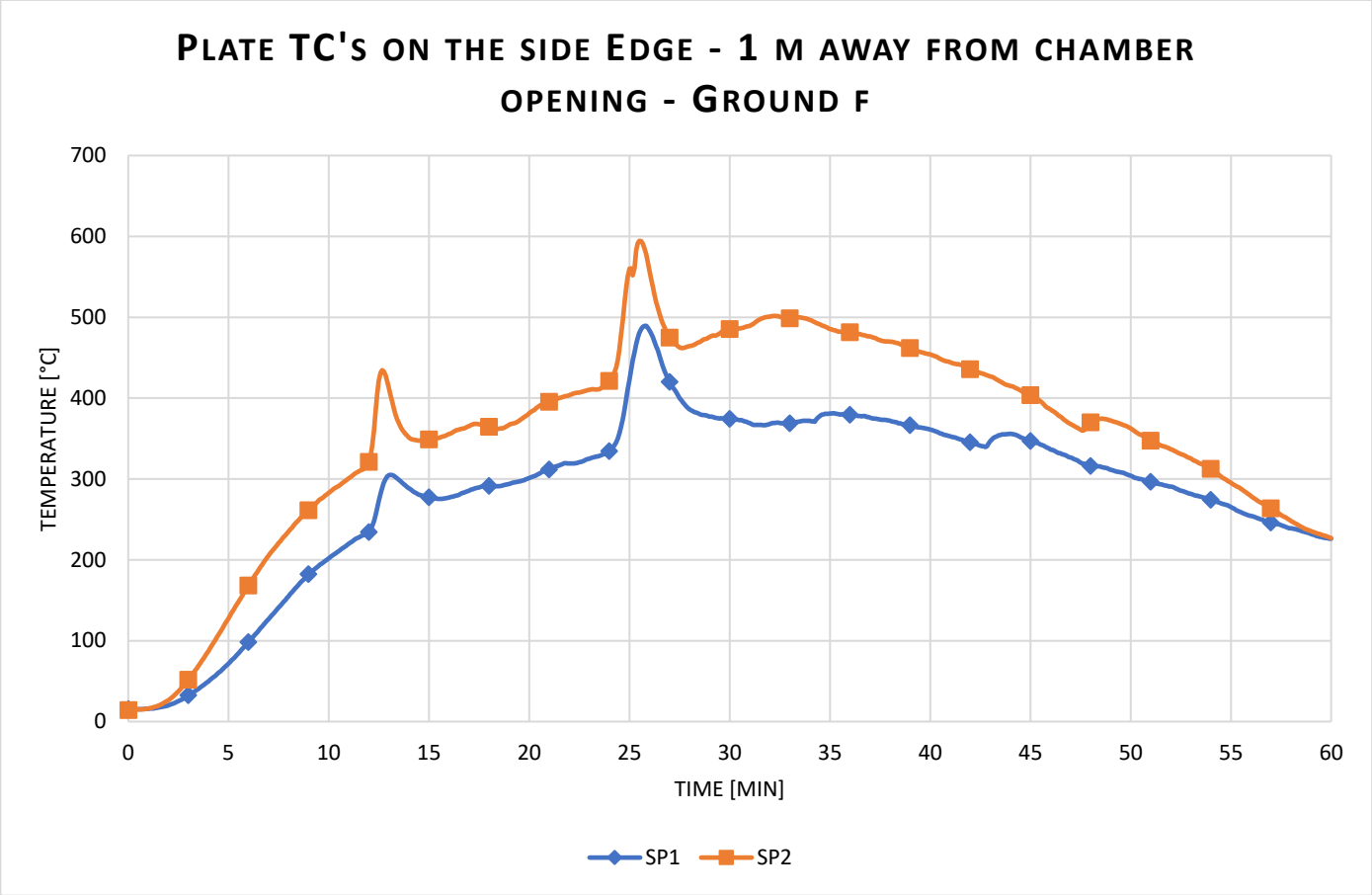

Temperature measured using Inconels on the side edge

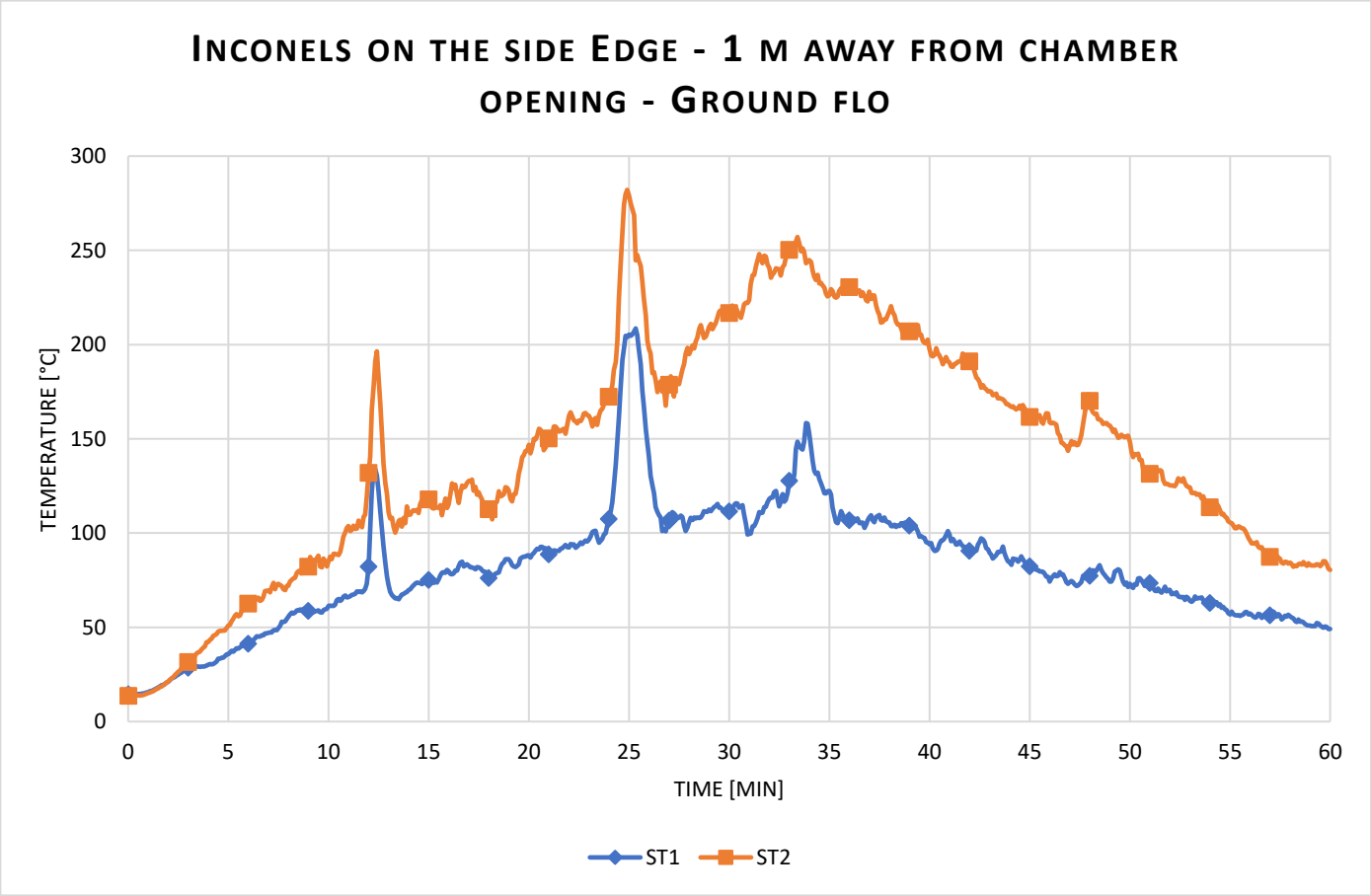

Radiant heat calculated from Plate TC

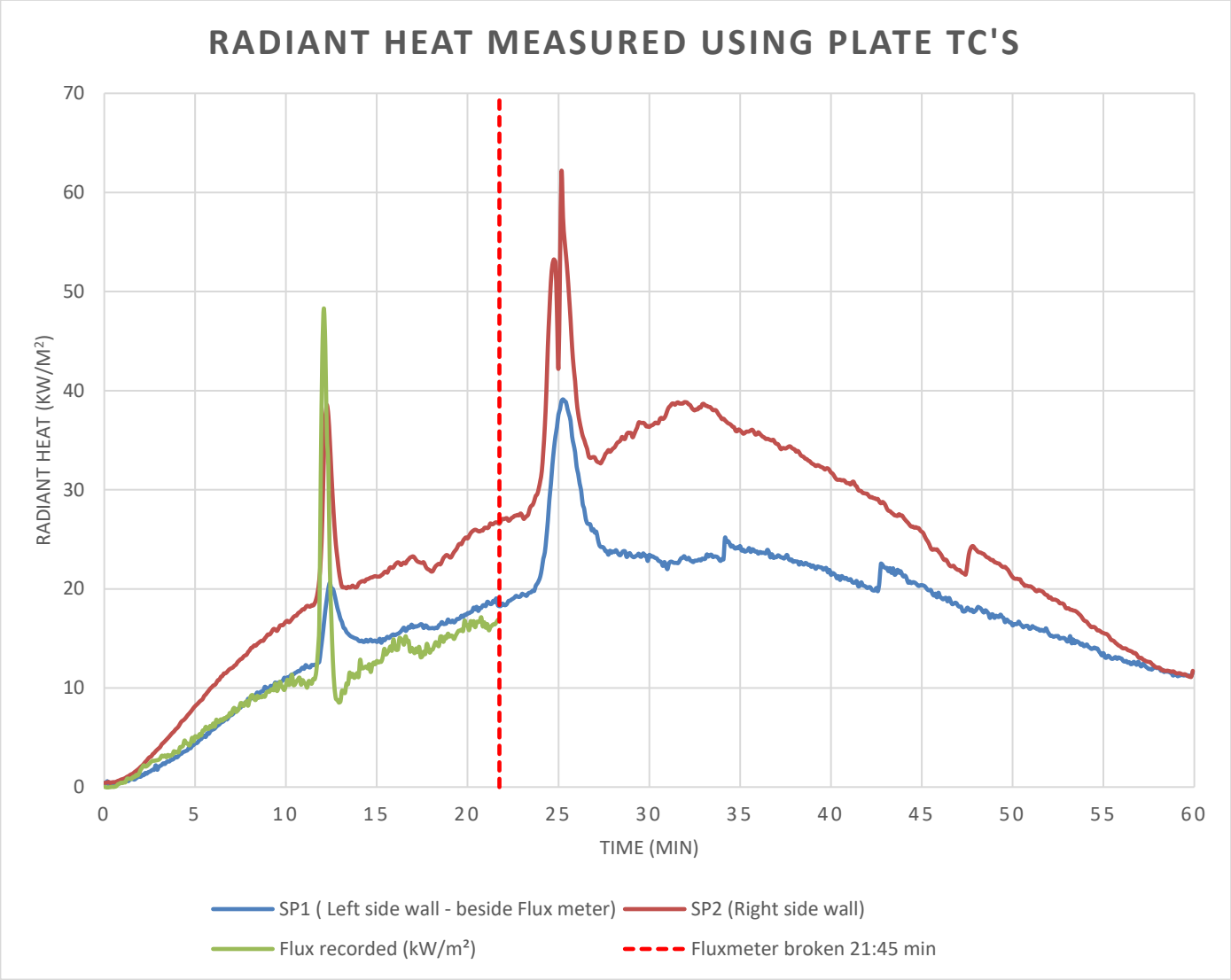

Data measurement from side edges on 1st Floor (660 mm from wall).

Layout

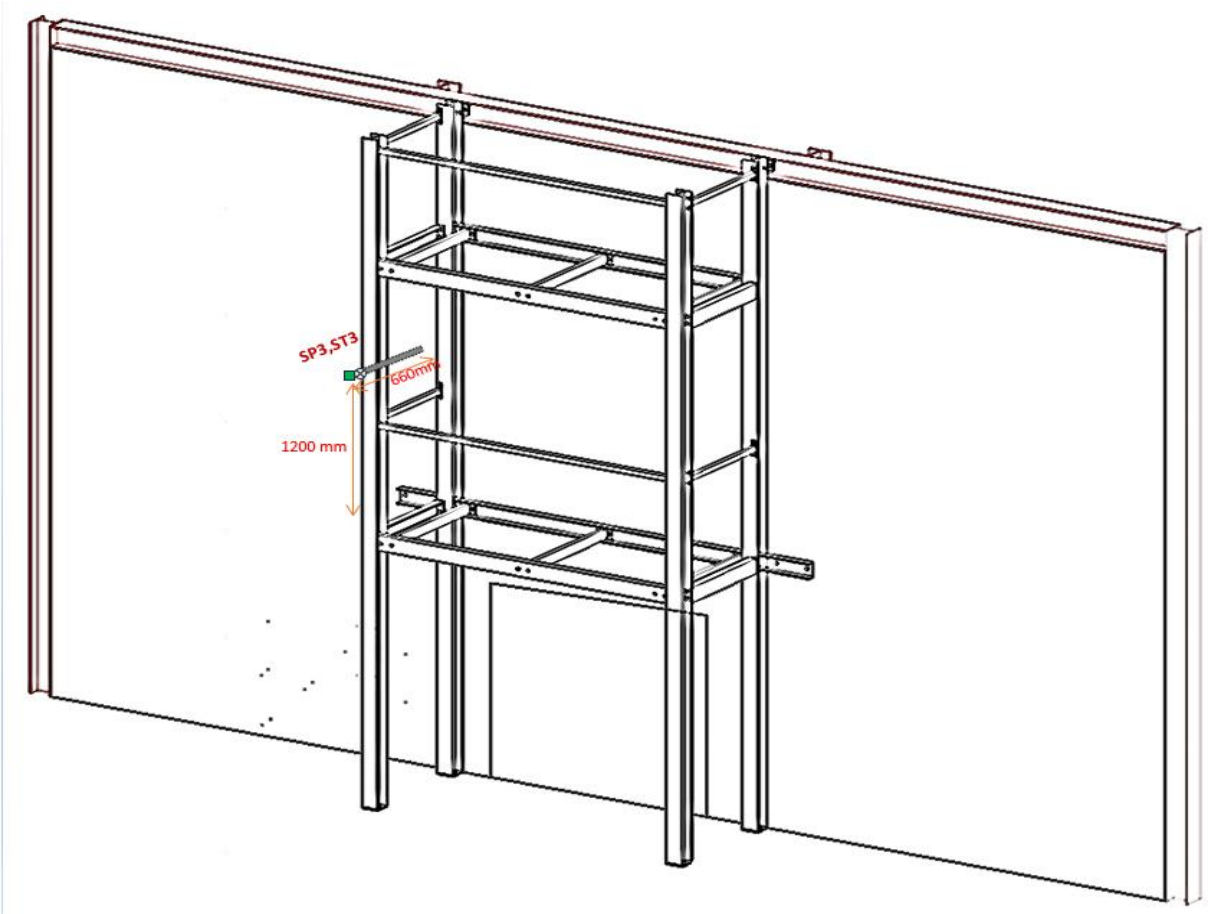

Temperature measured using plate TC on the side edge – 1st floor

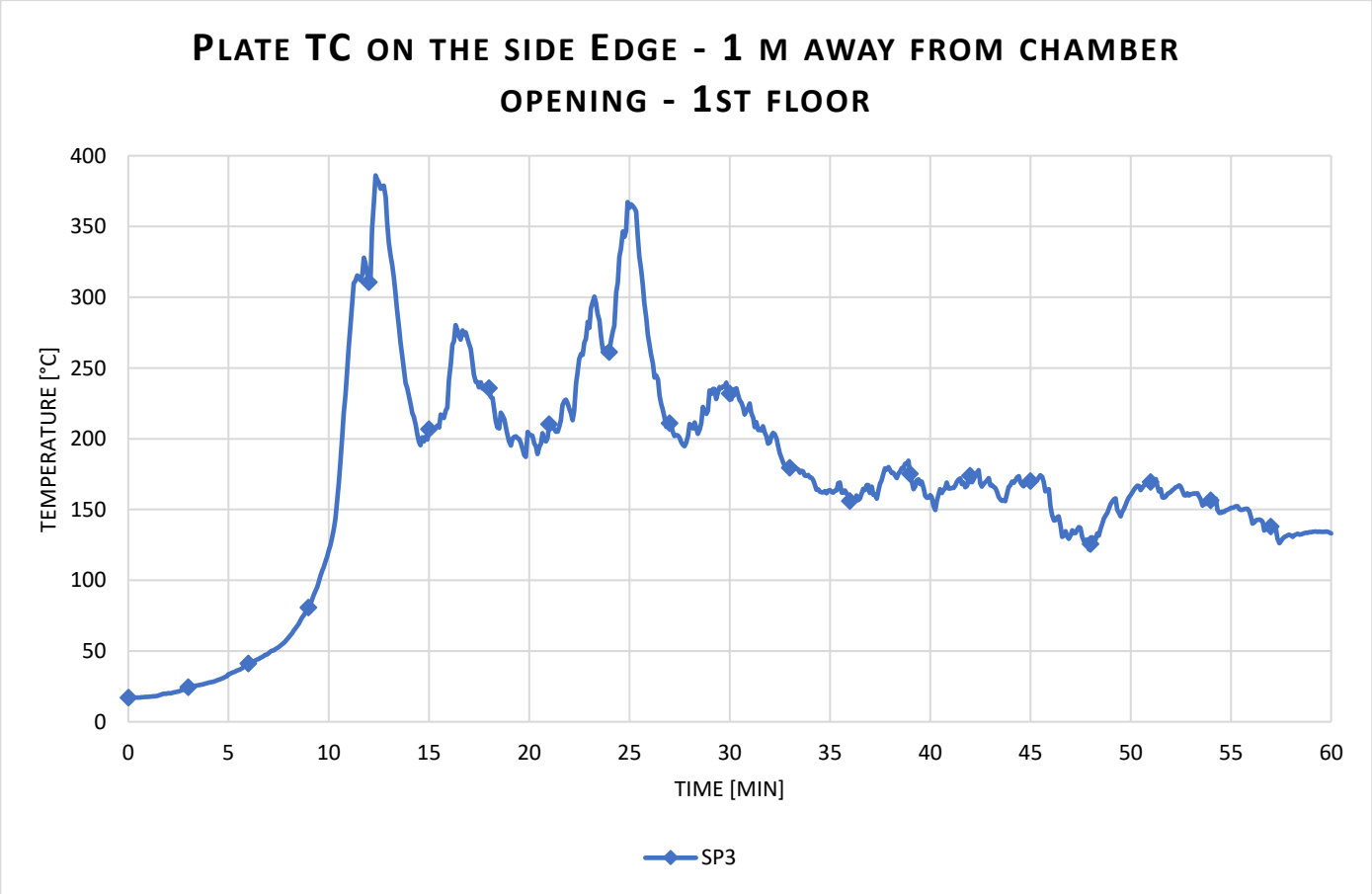

Temperature measured using Inconel on the side edge – 1st floor

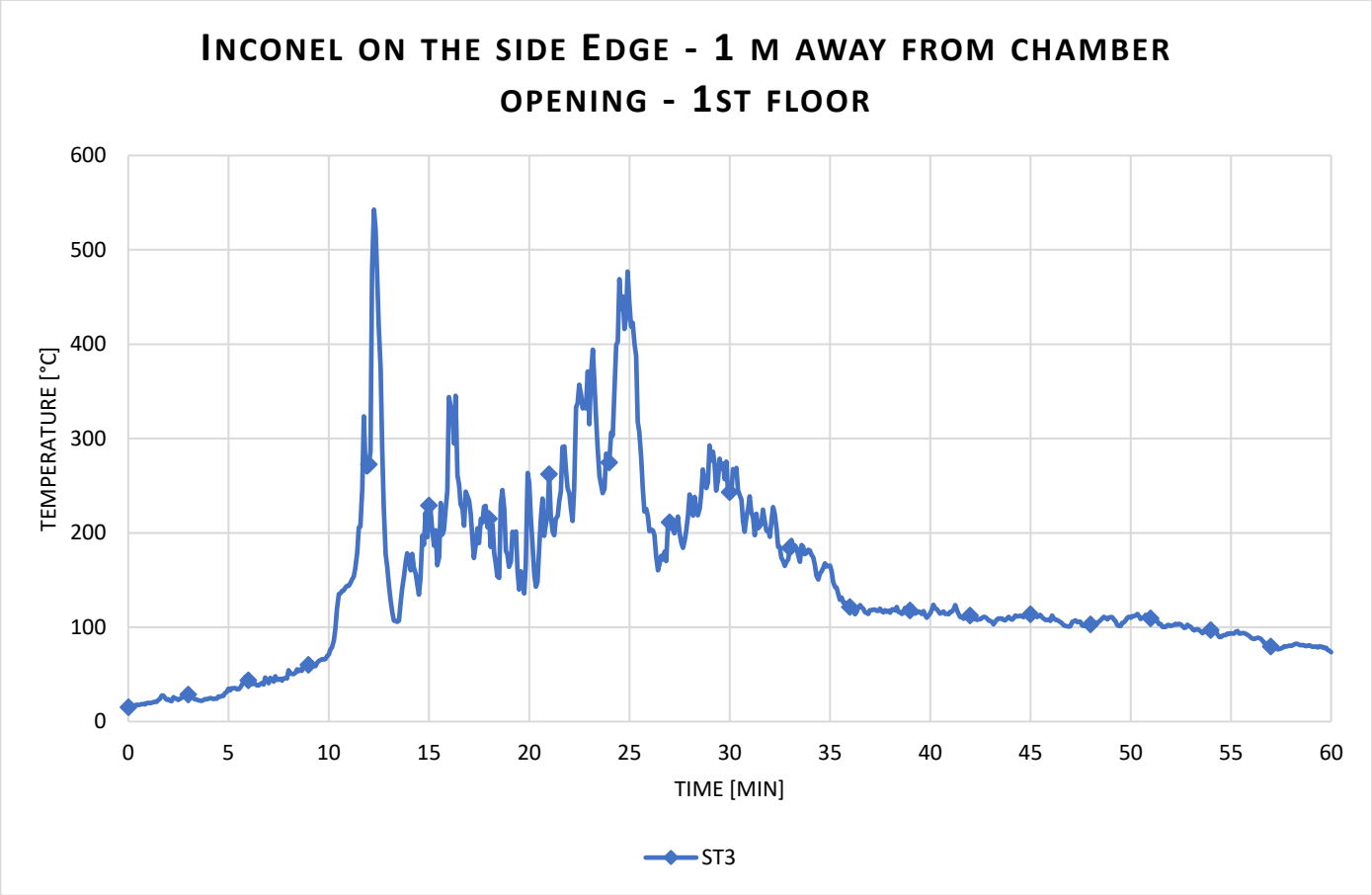

Radiant heat calculated from Plate TC

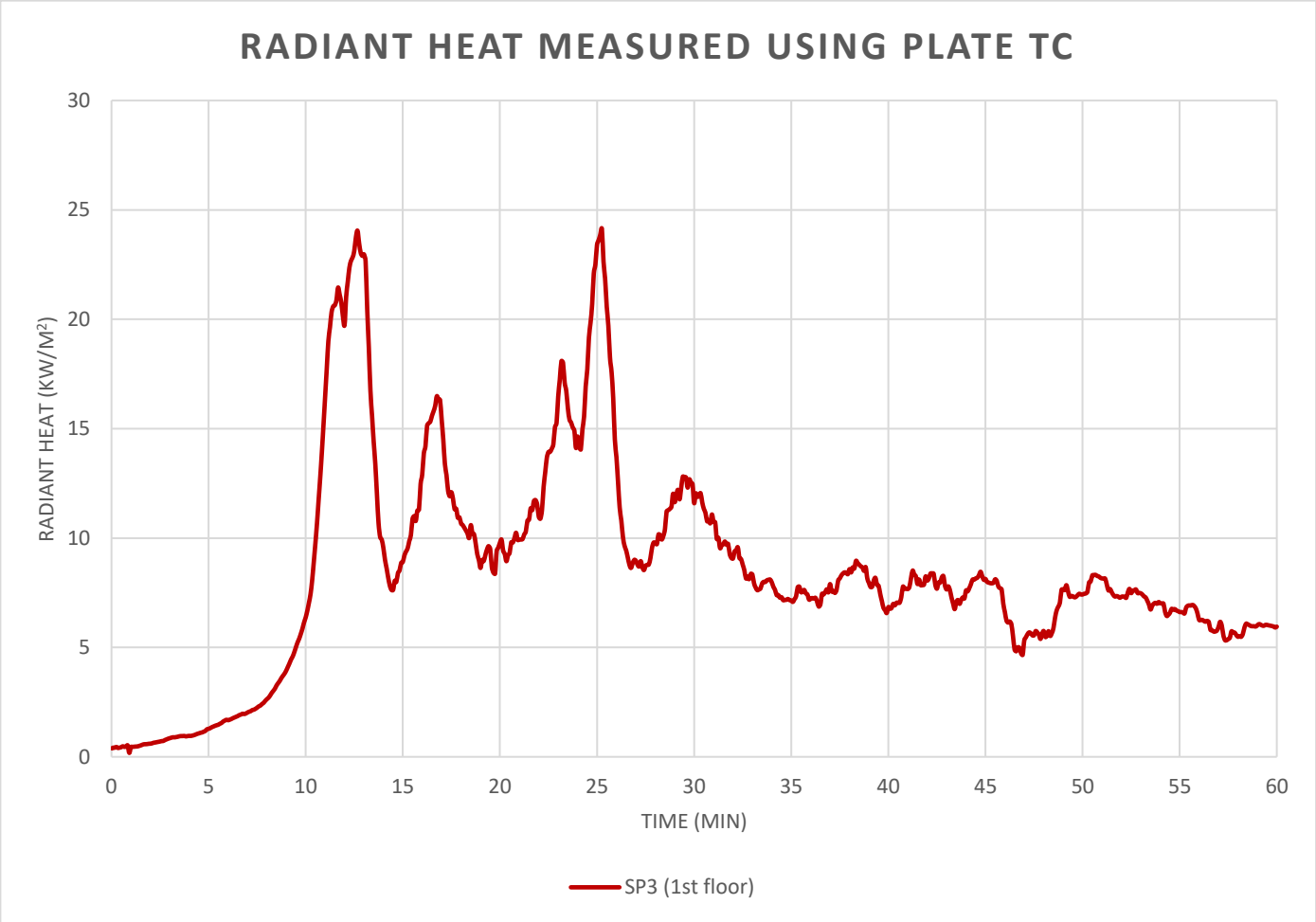

Data measurement from side edges on 2nd Floor (660 mm from wall).

Layout

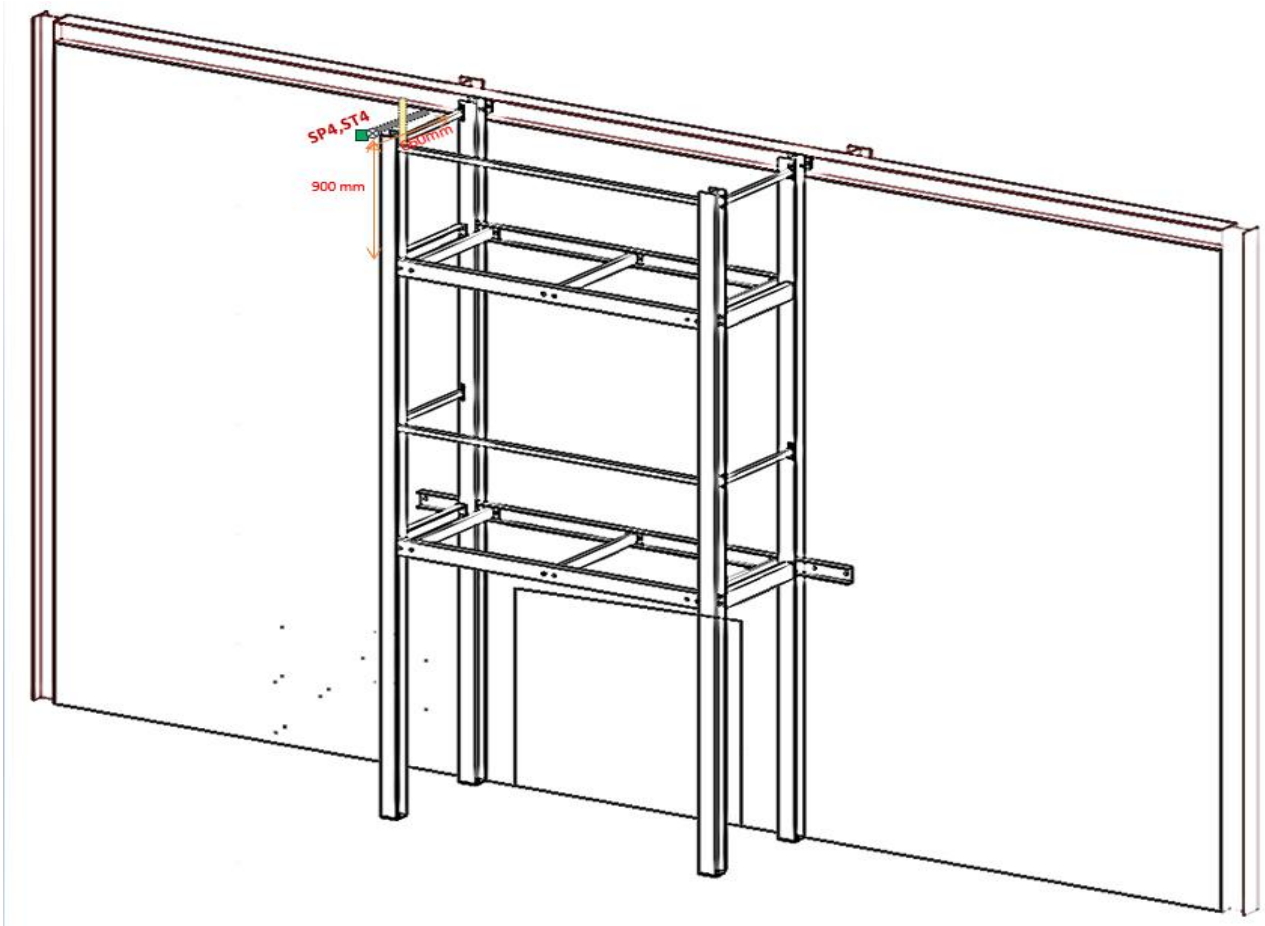

Temperature measured using plate TC's on the side edge – 2nd floor

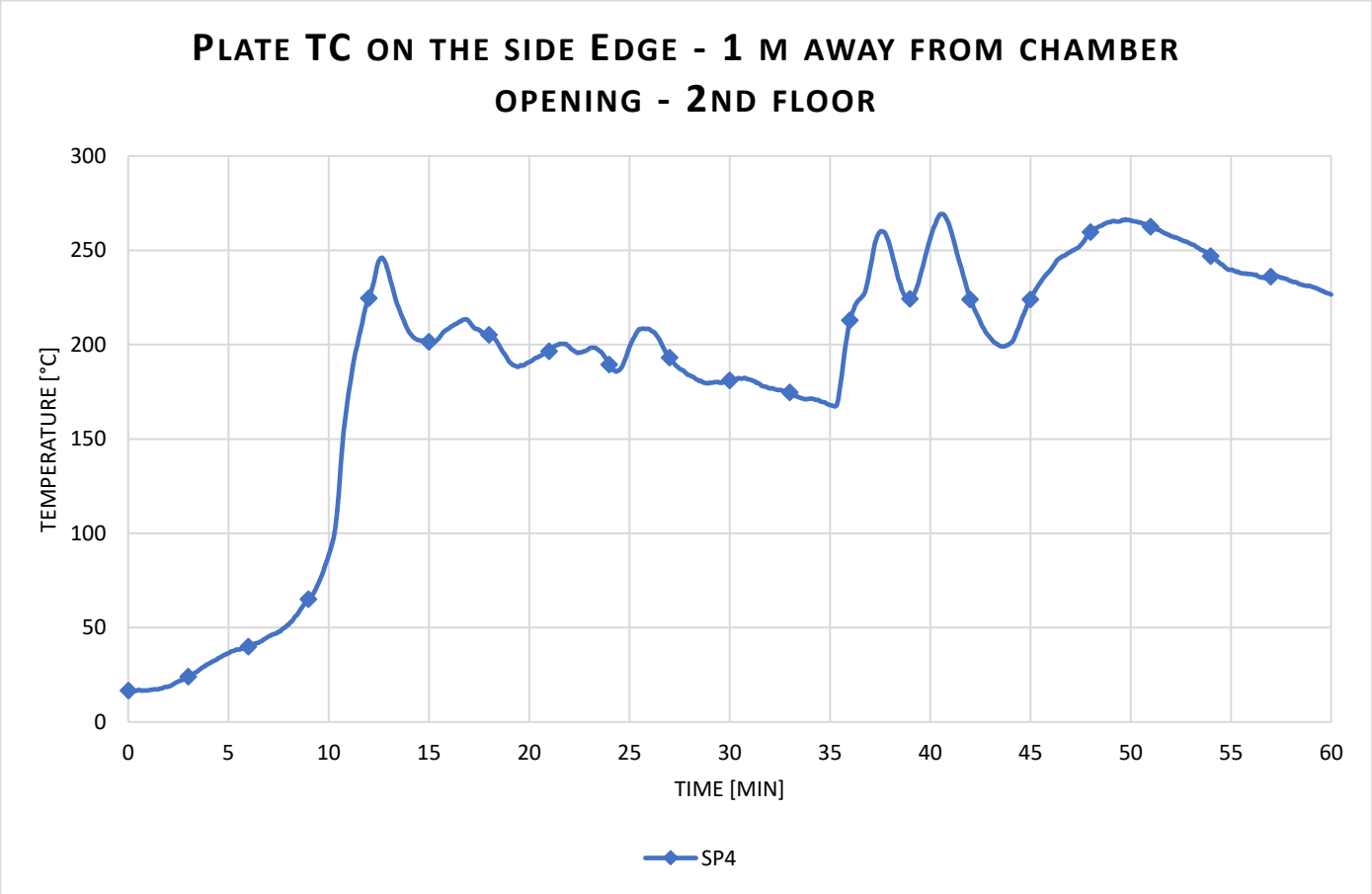

Temperature measured using Inconels on the side edge – 2nd floor

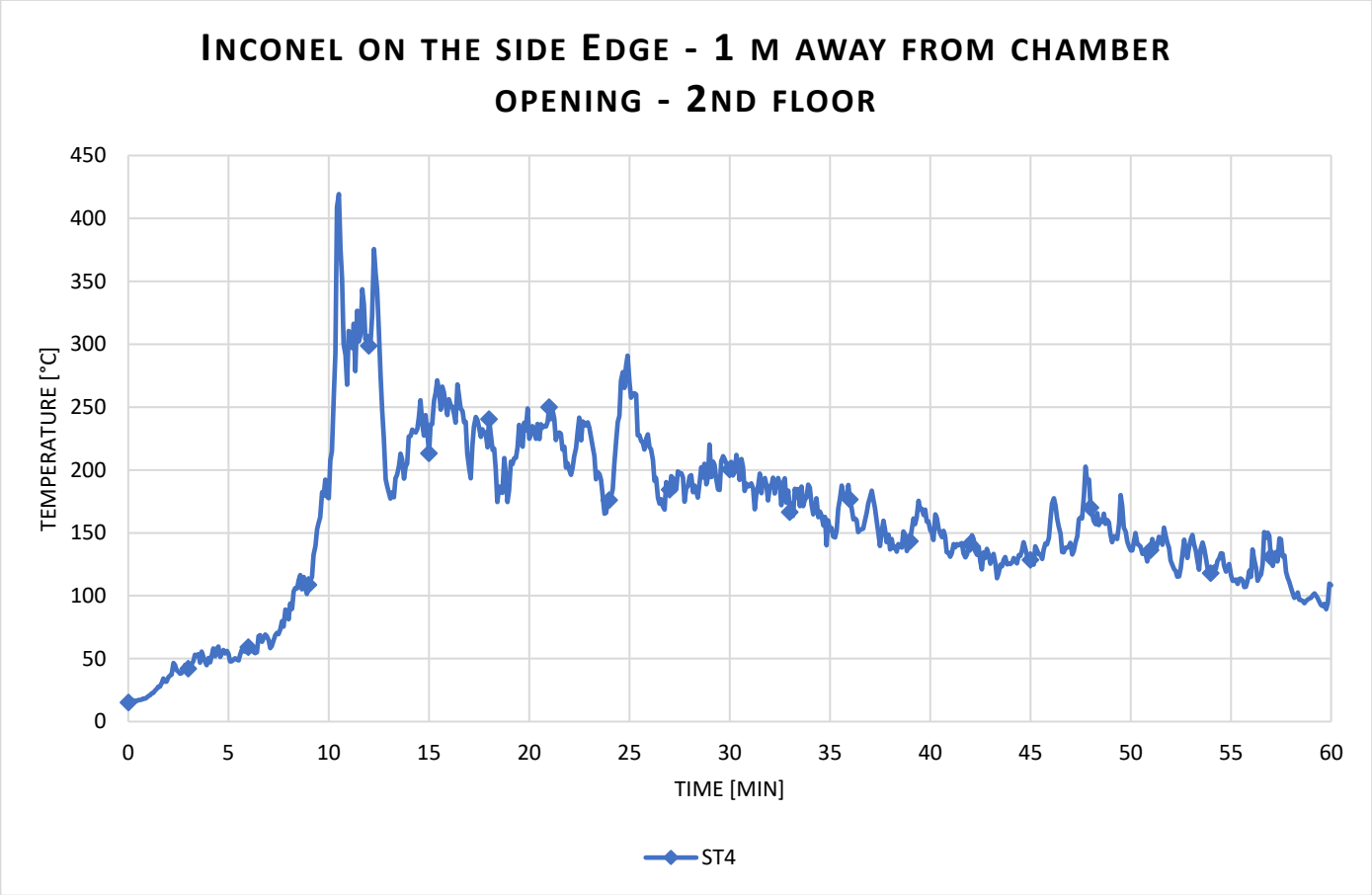

Radiant heat calculated from Plate TC

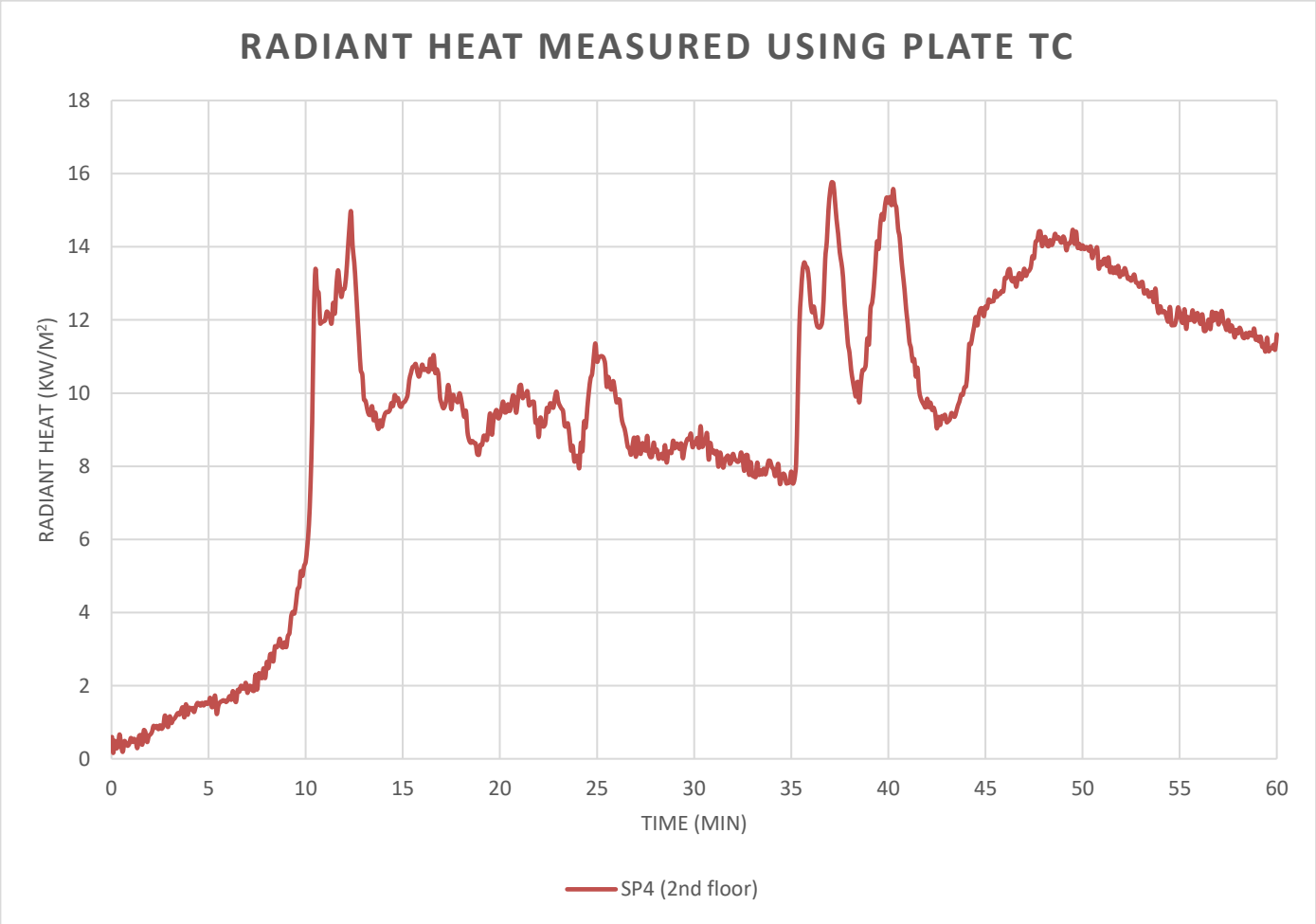

Data measurement from 1st floor wall.

Layout

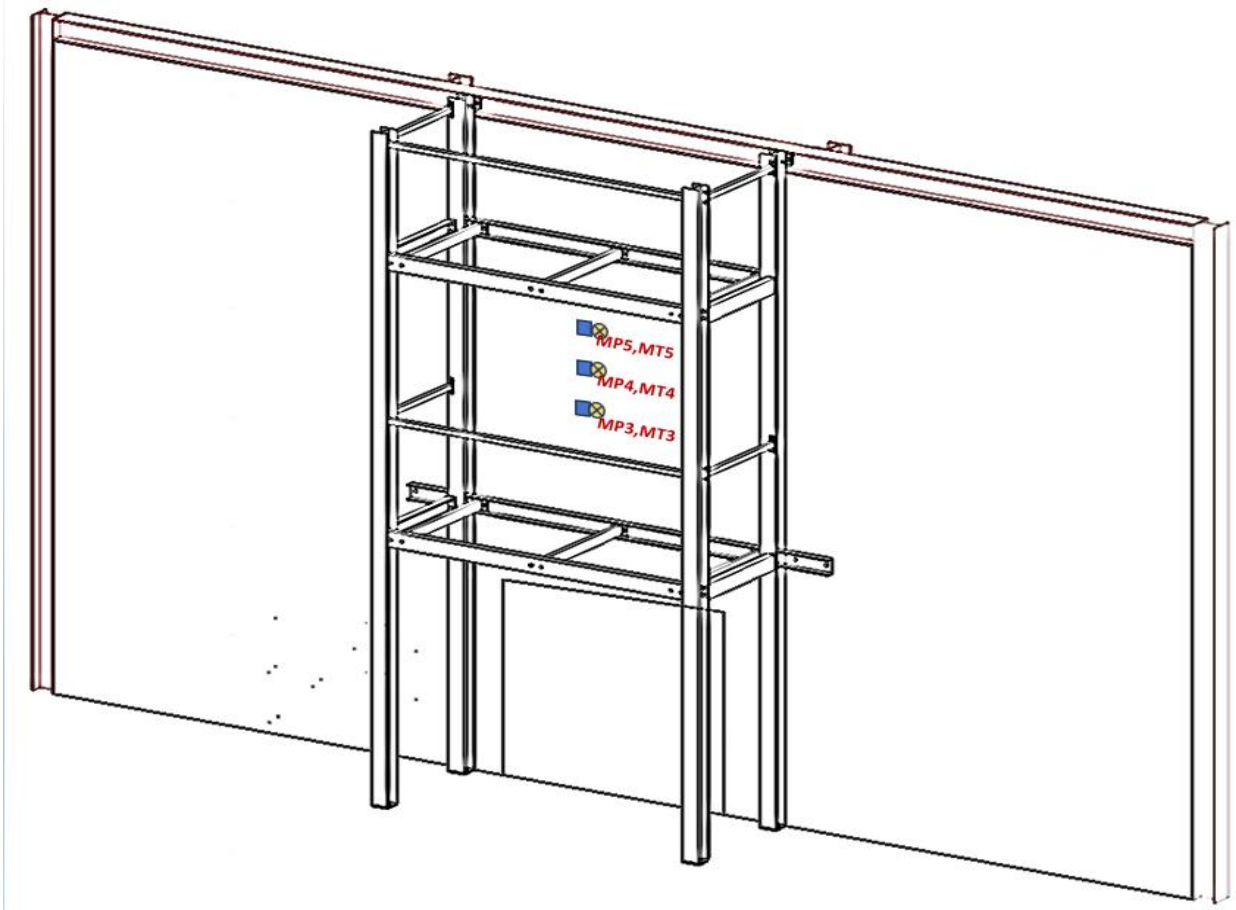

Temperature measured from the Plate TC's on wall at 1st floor

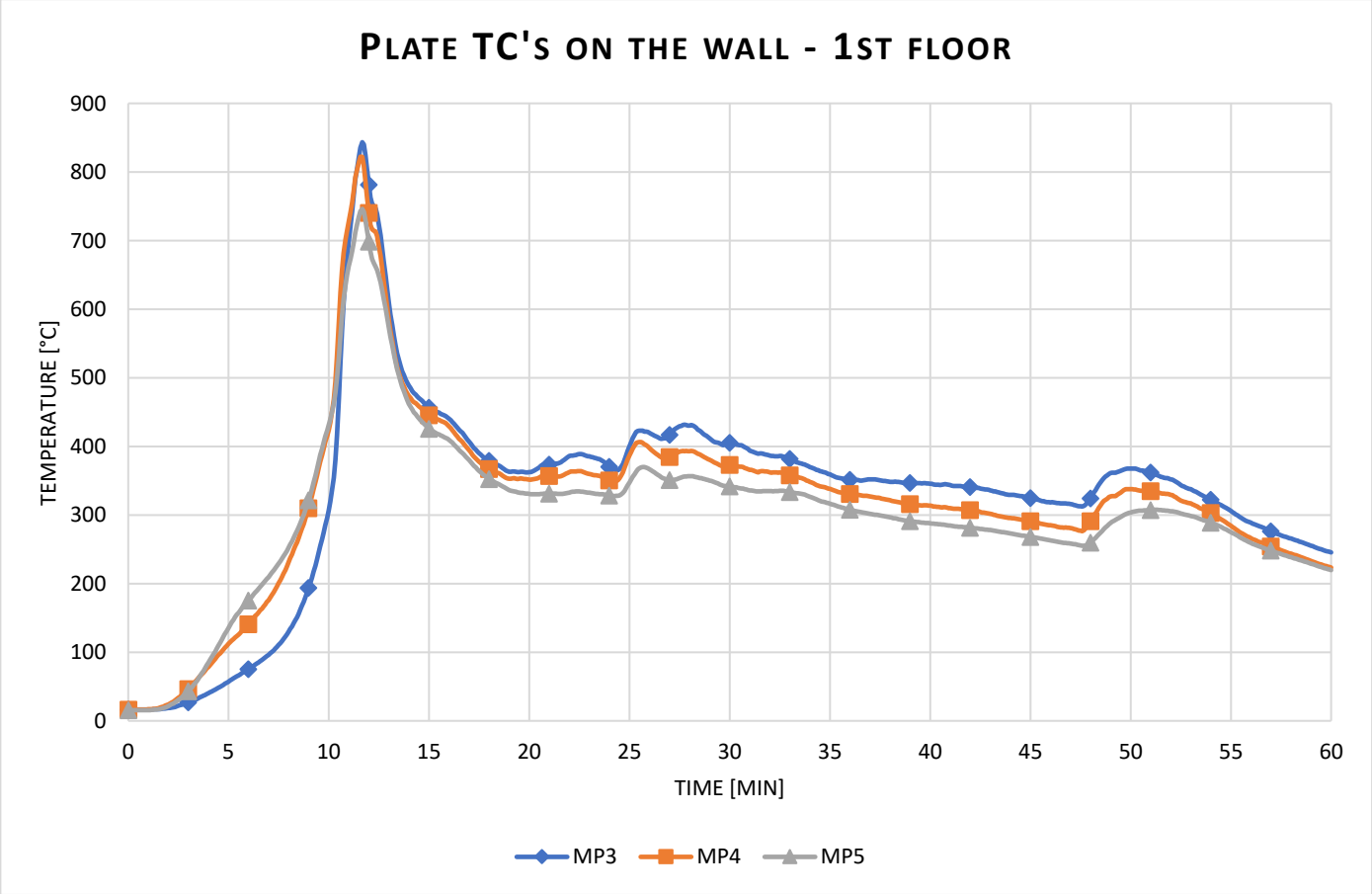

Temperature measured from the Inconels on wall at 1st floor

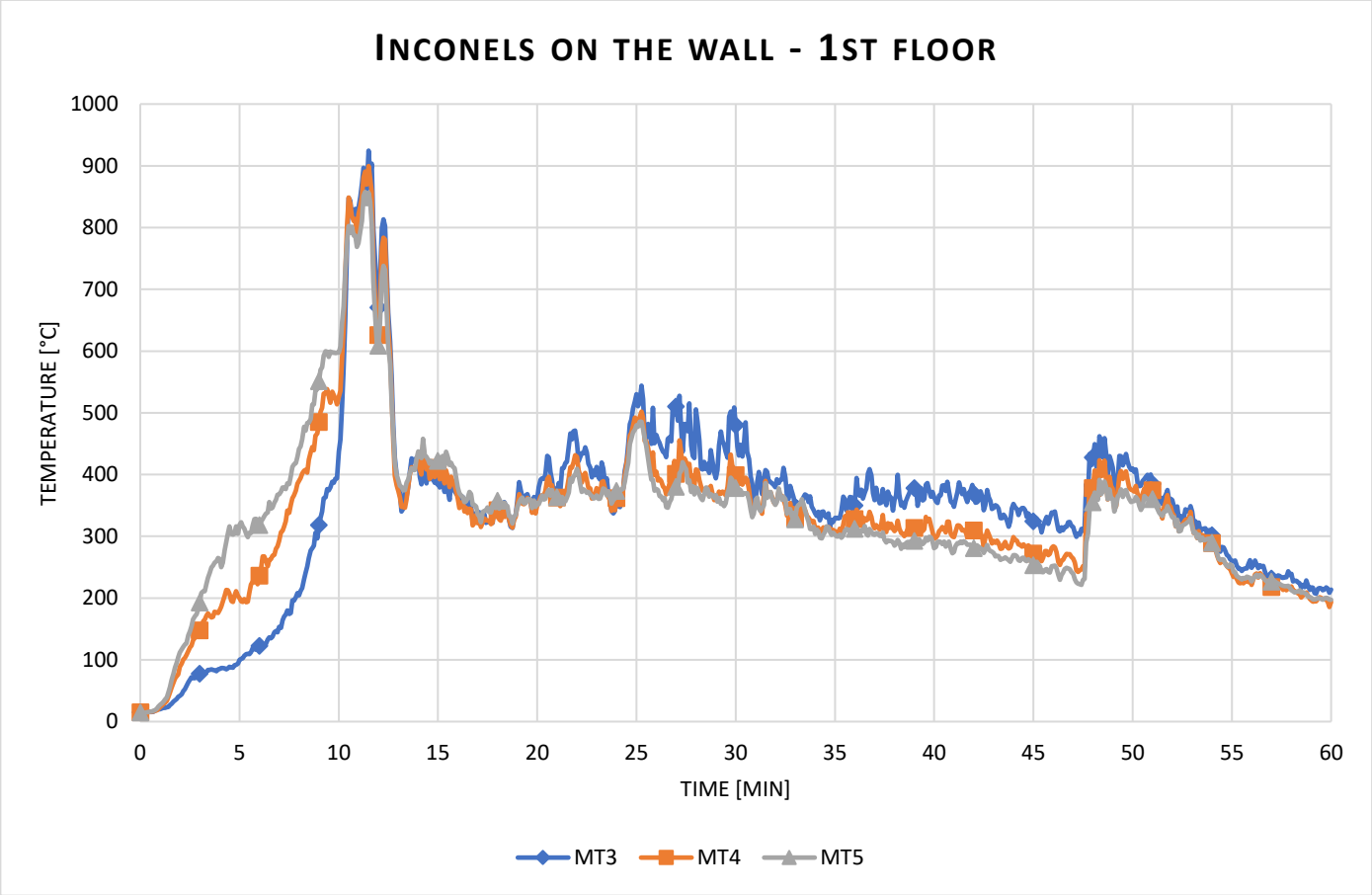

Radiant heat calculated from Plate TC

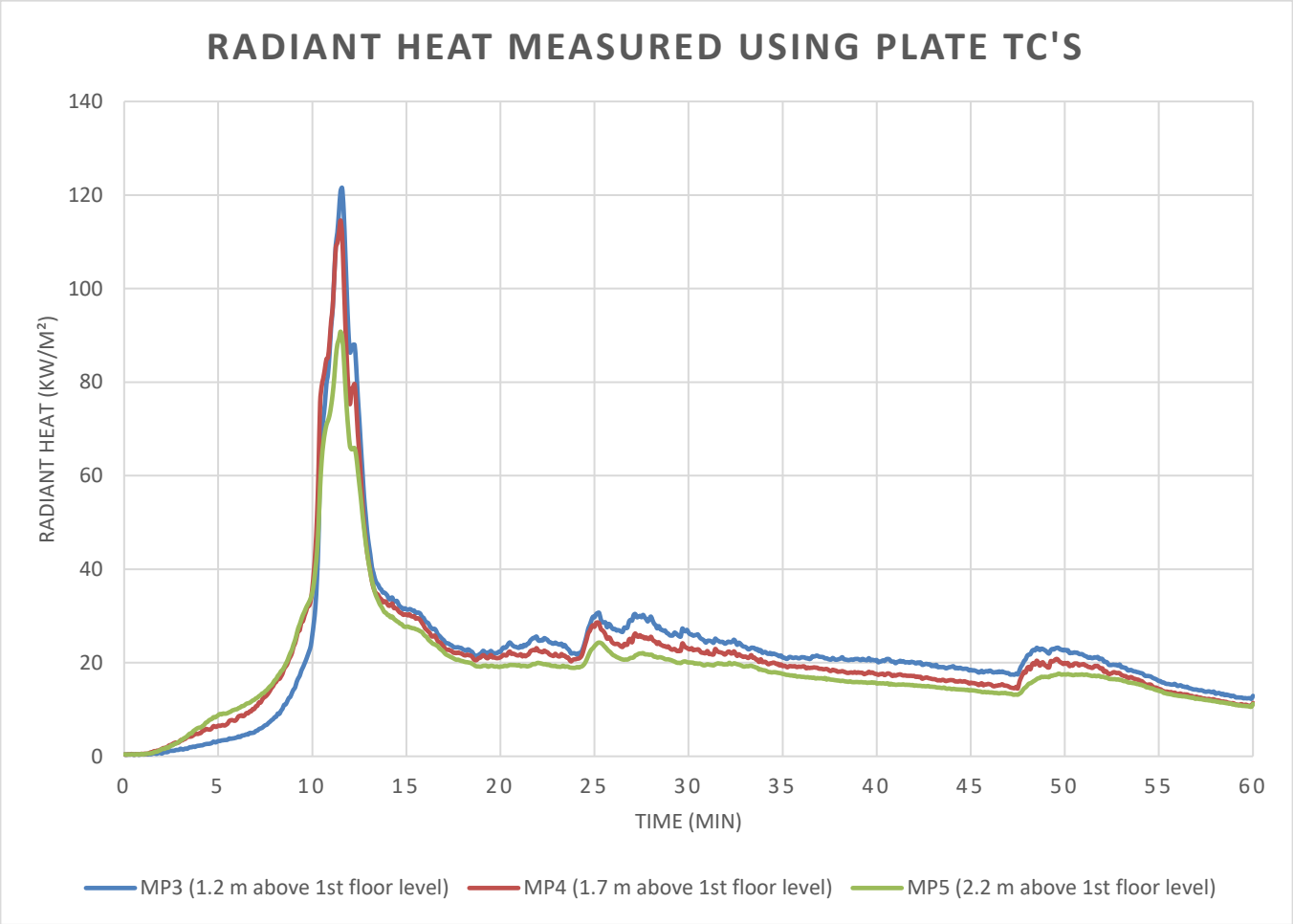

Data measurement from 2nd floor wall.

Layout

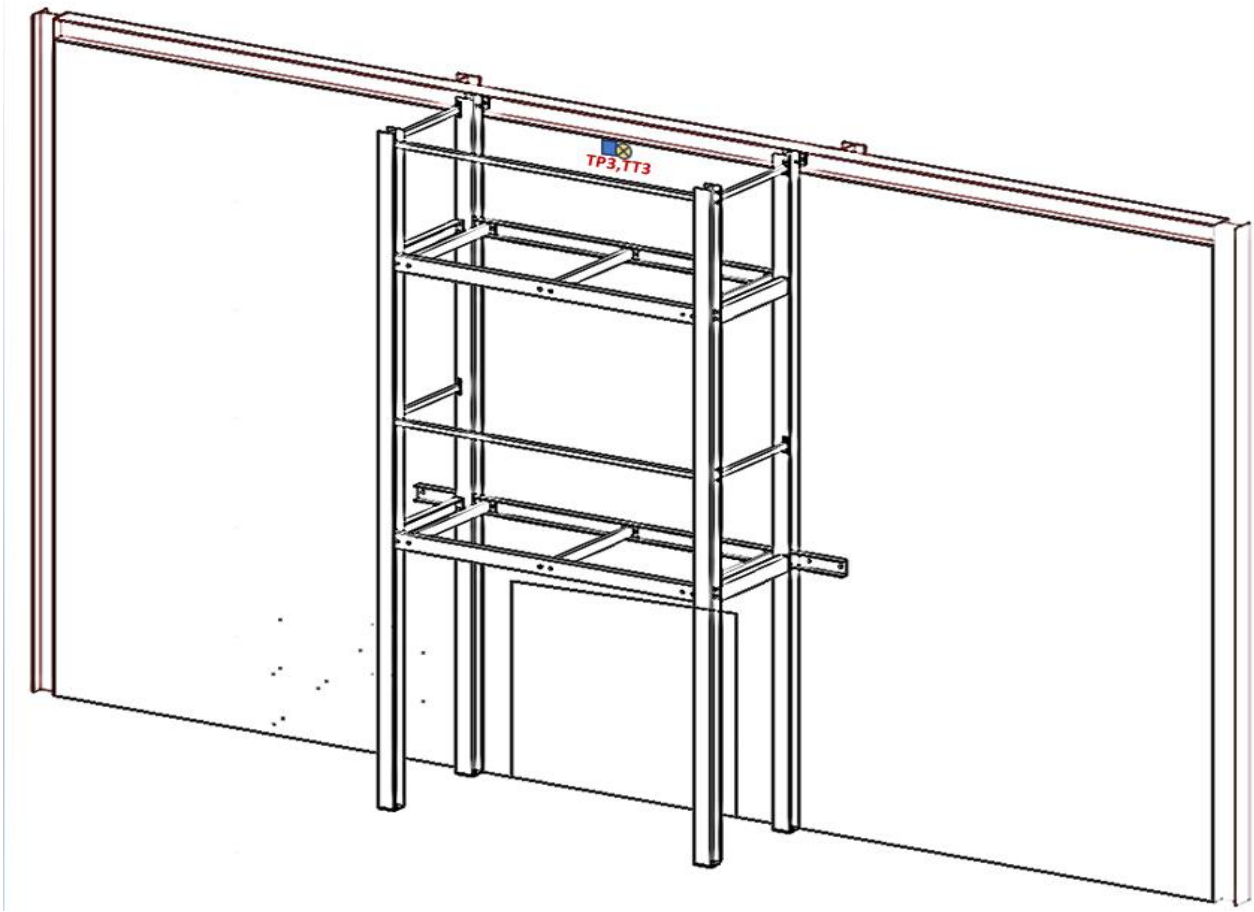

Temperature measured from Plate TC on the wall at 2nd floor

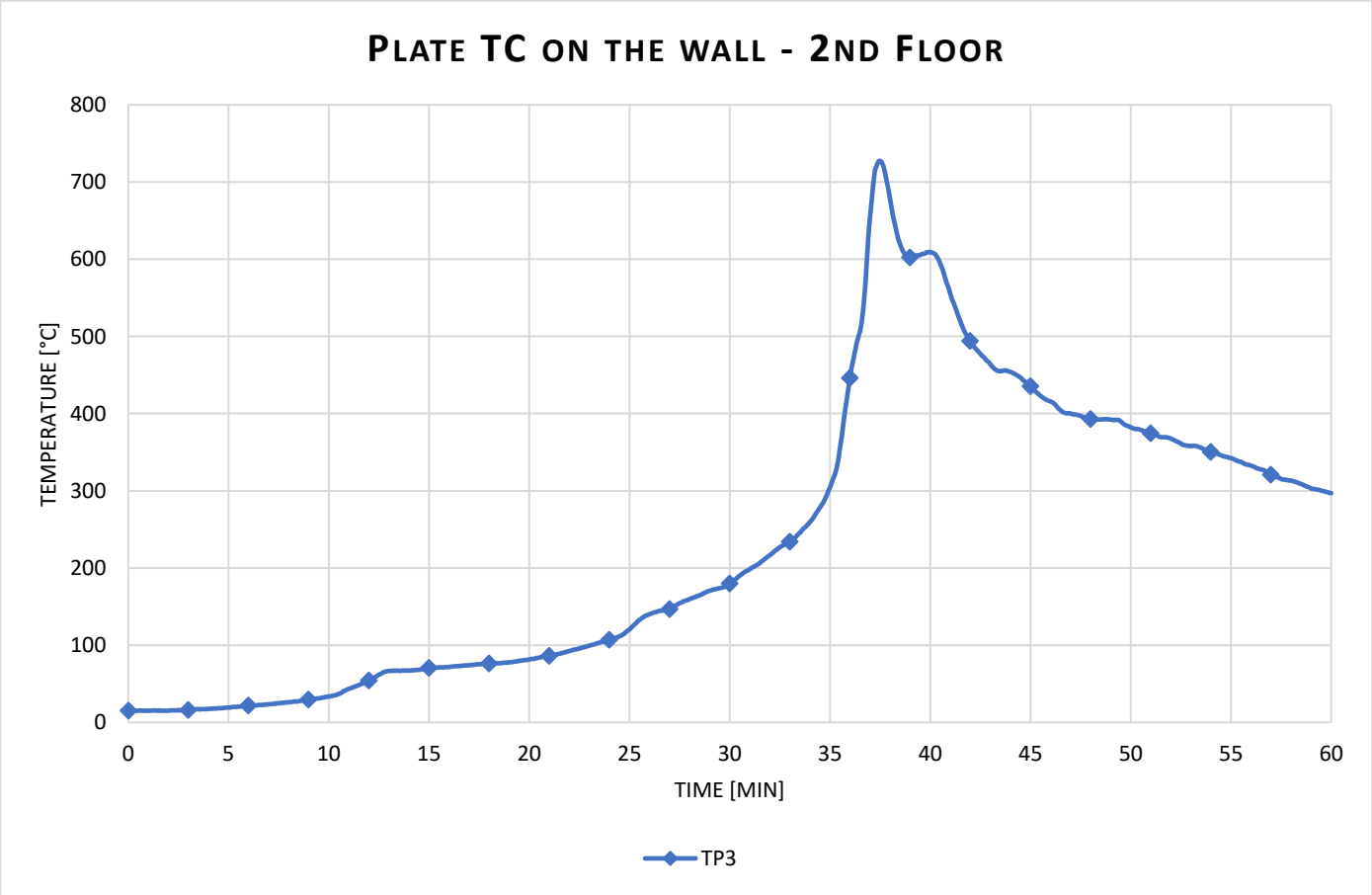

Temperature measured from Inconel on the wall at 2nd floor

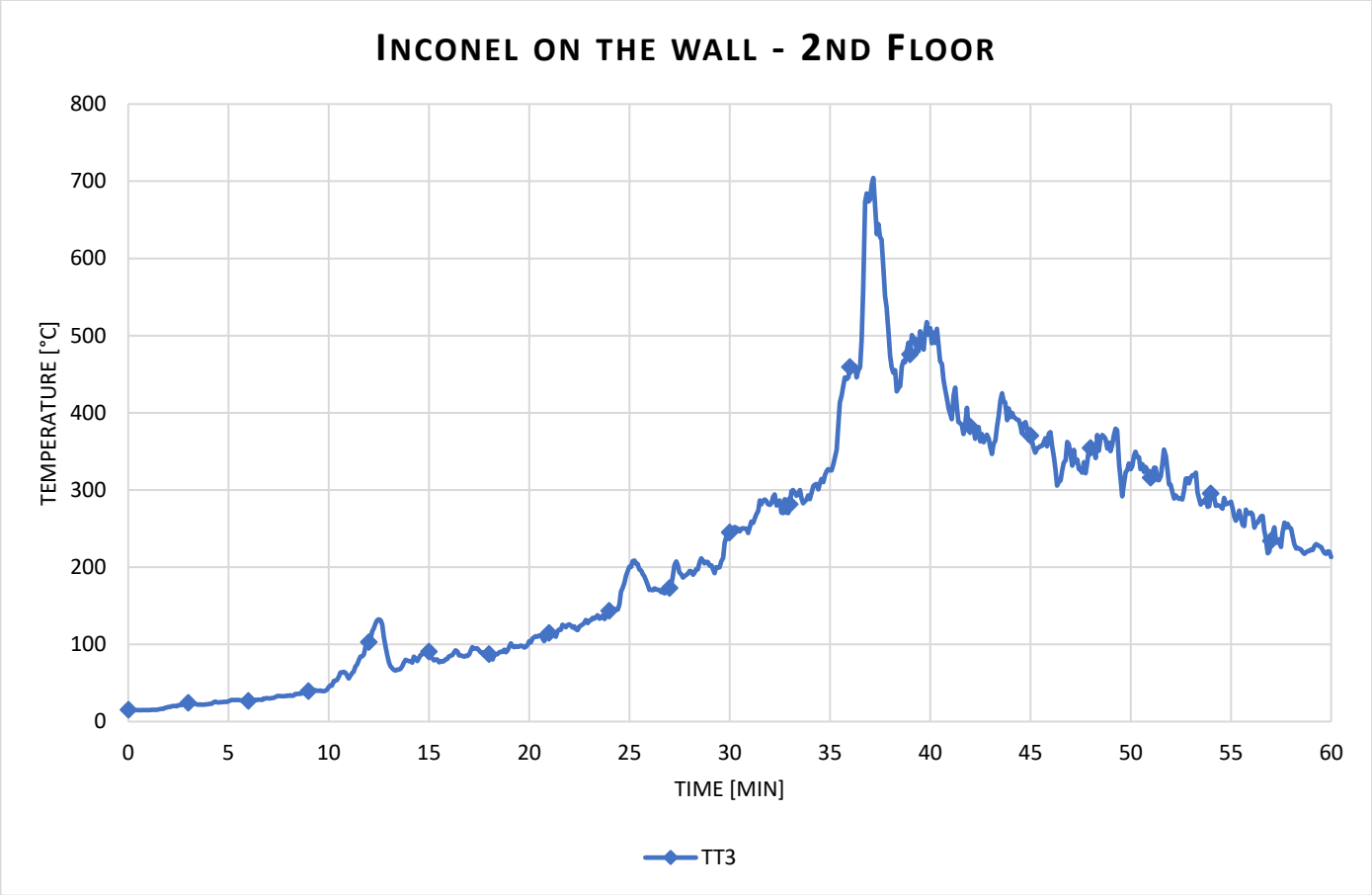

Radiant heat calculated from Plate TC

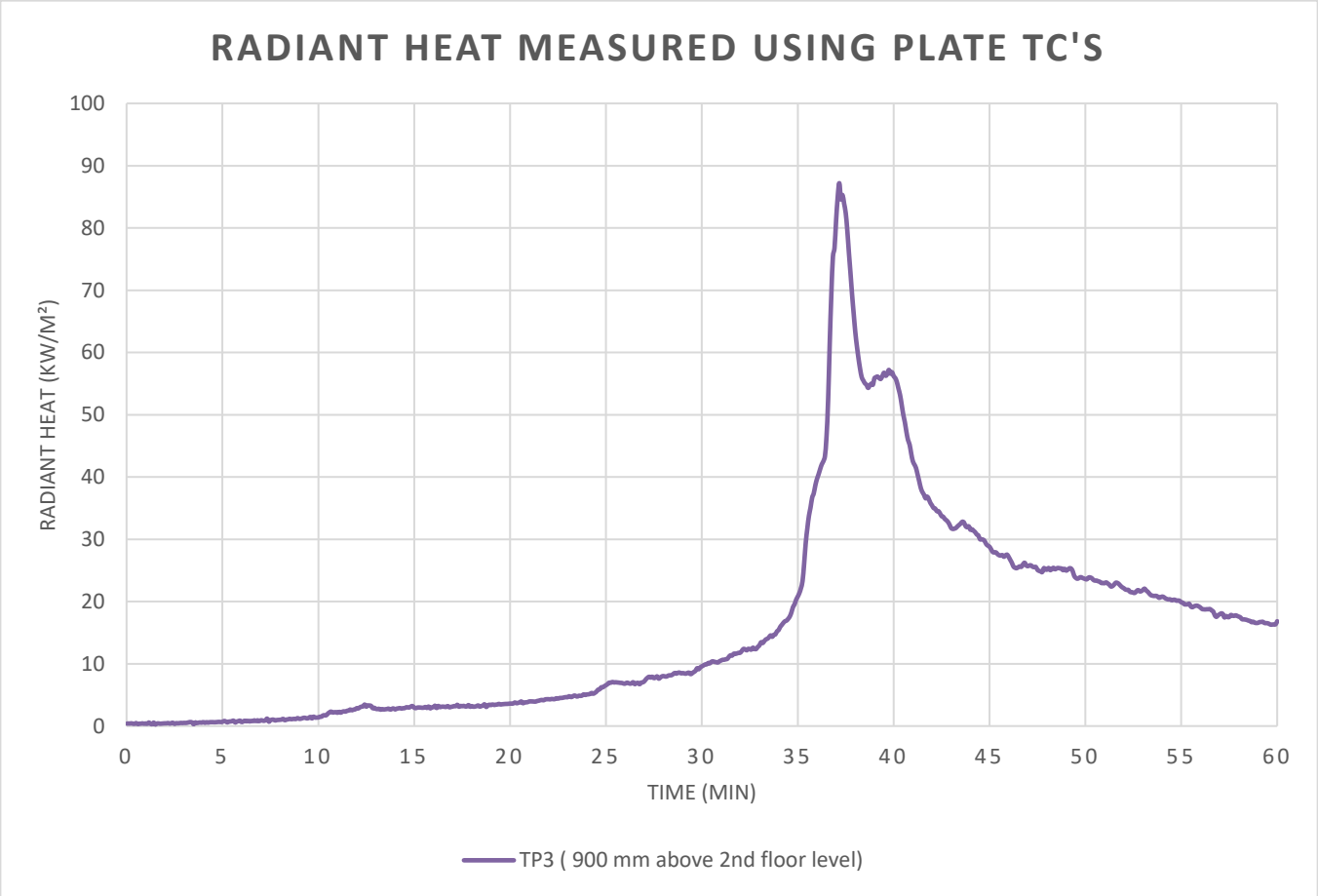

Data measurement from 1st floor exposed edge.

Layout

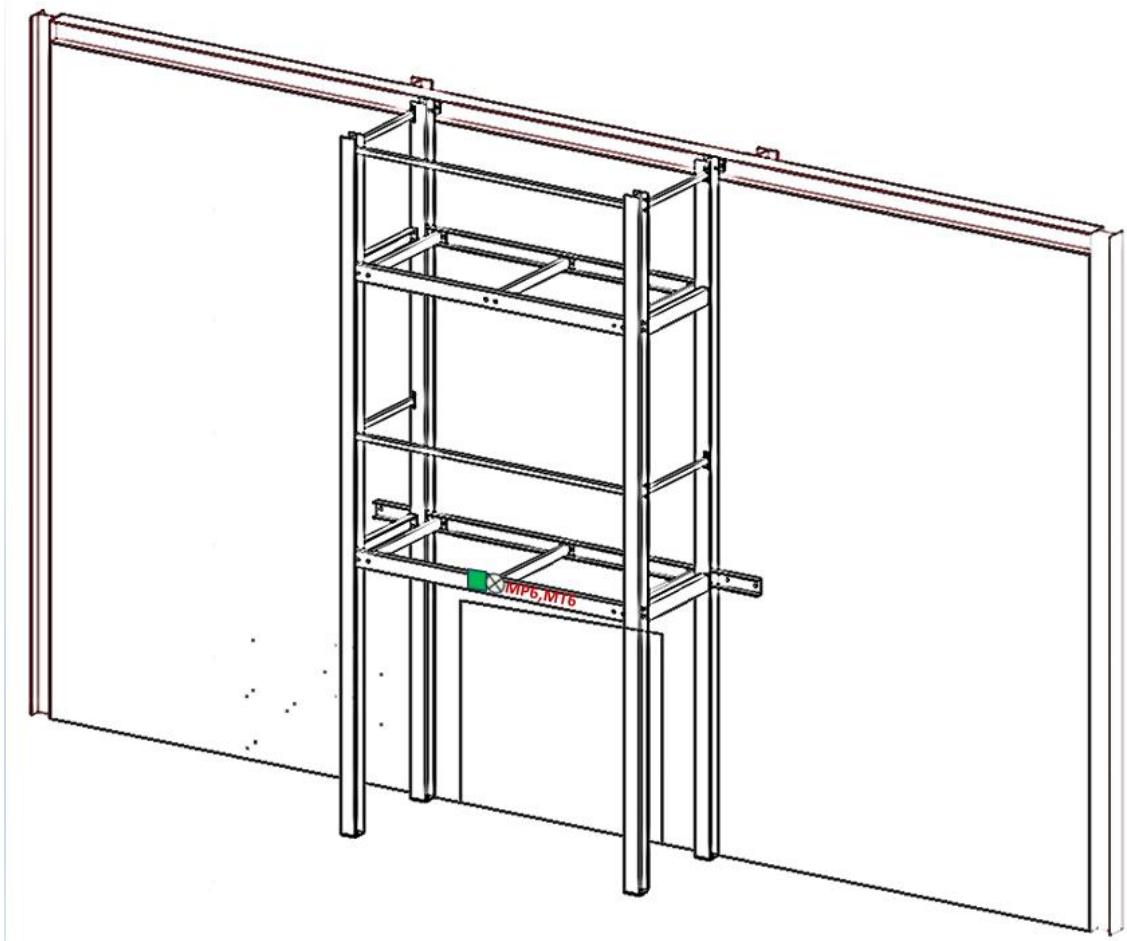

Temperature measured using plate TC 1st floor exposed edge

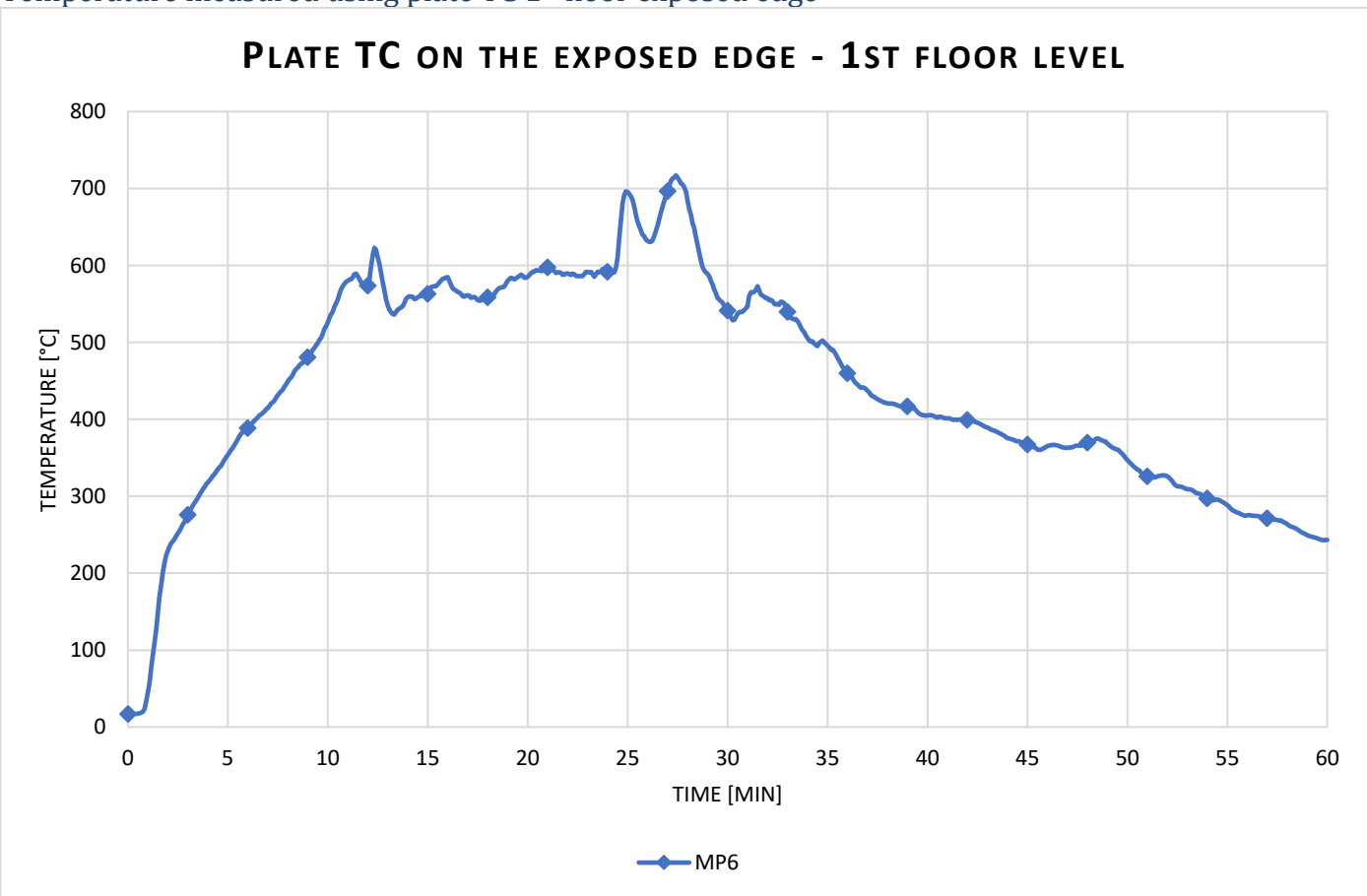

Temperature measured using plate Inconel 1st floor exposed edge

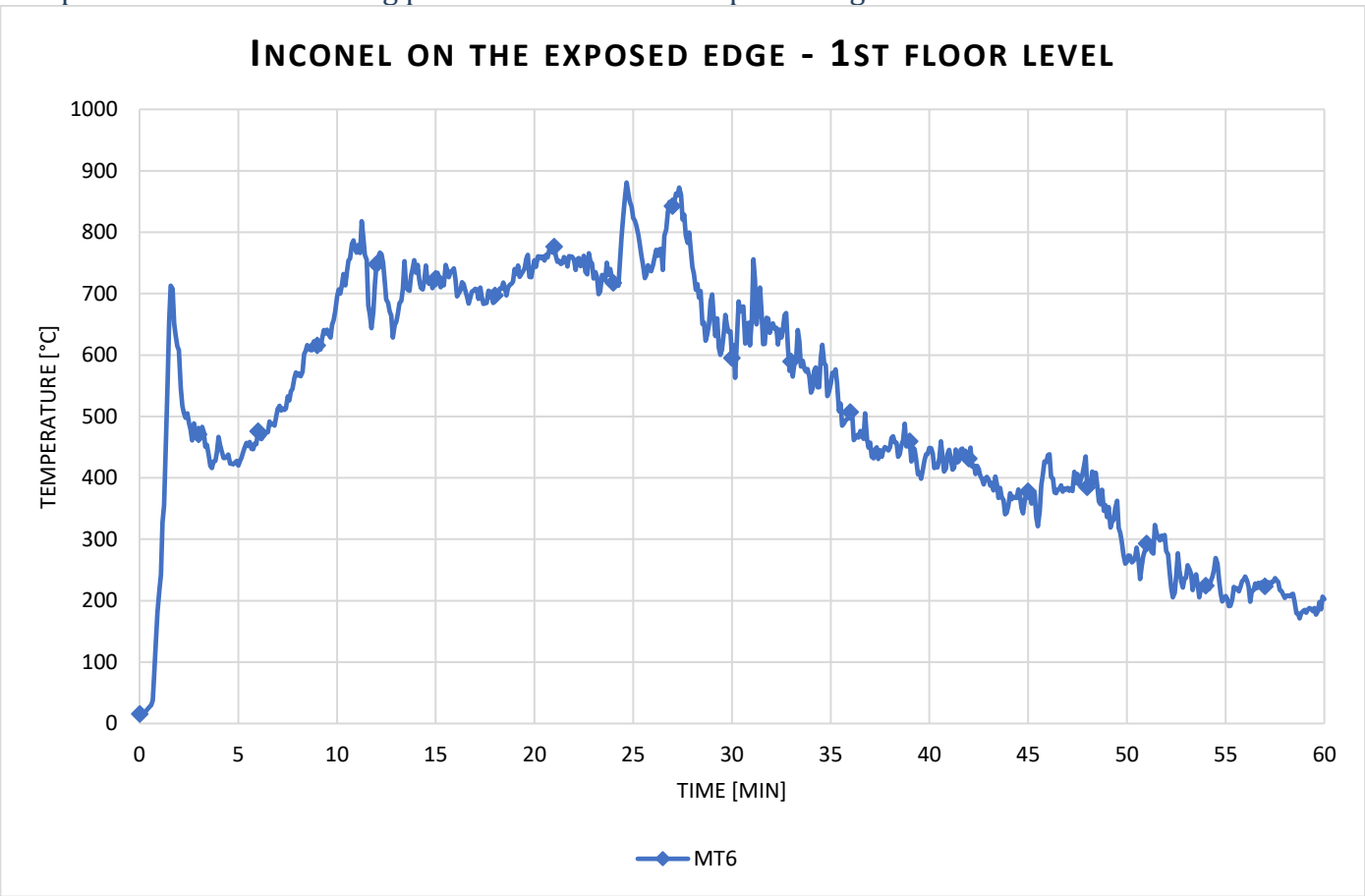

Radiant heat calculated from Plate TC

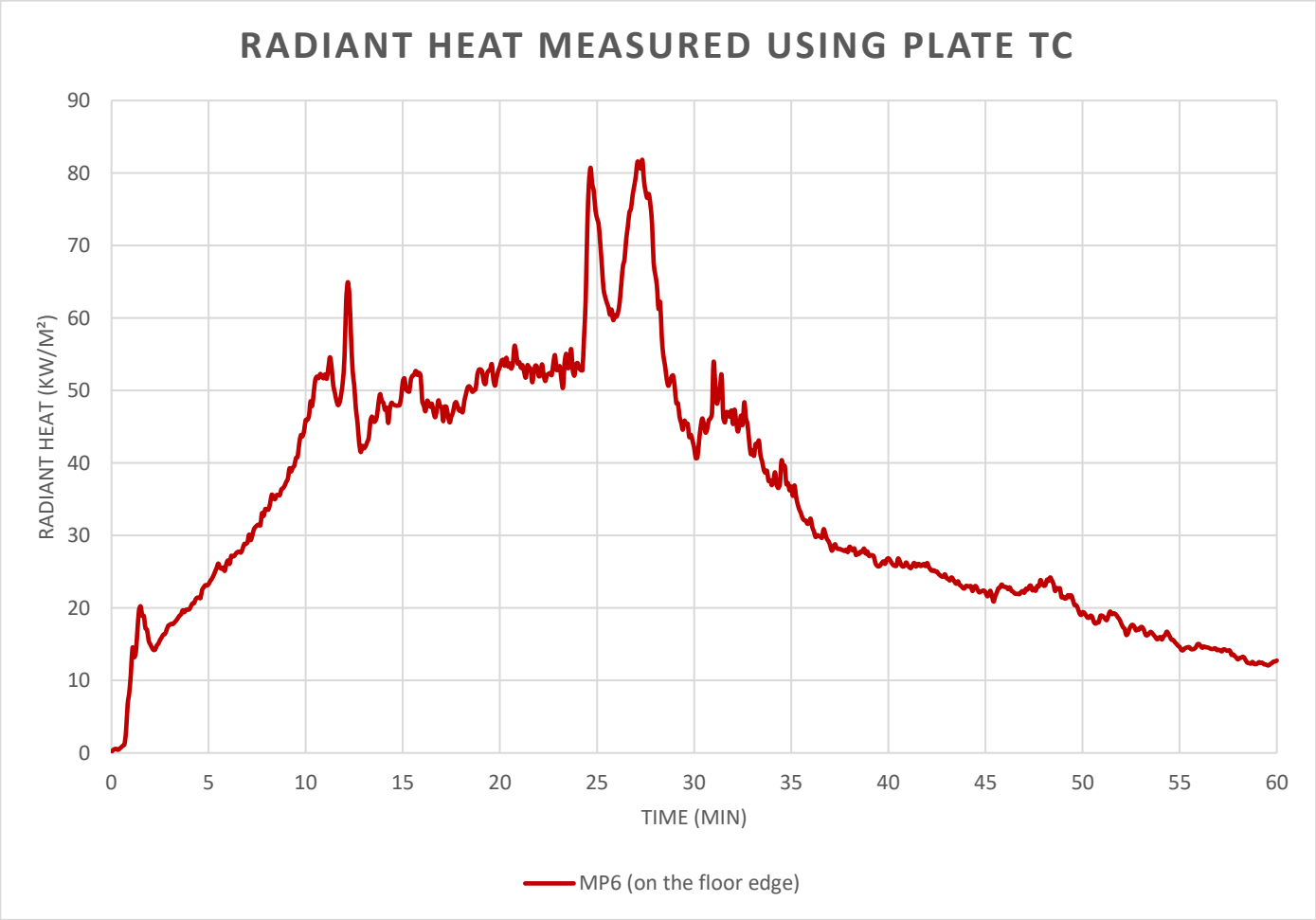

Data measurement from 1st floor exposed edge.

Layout

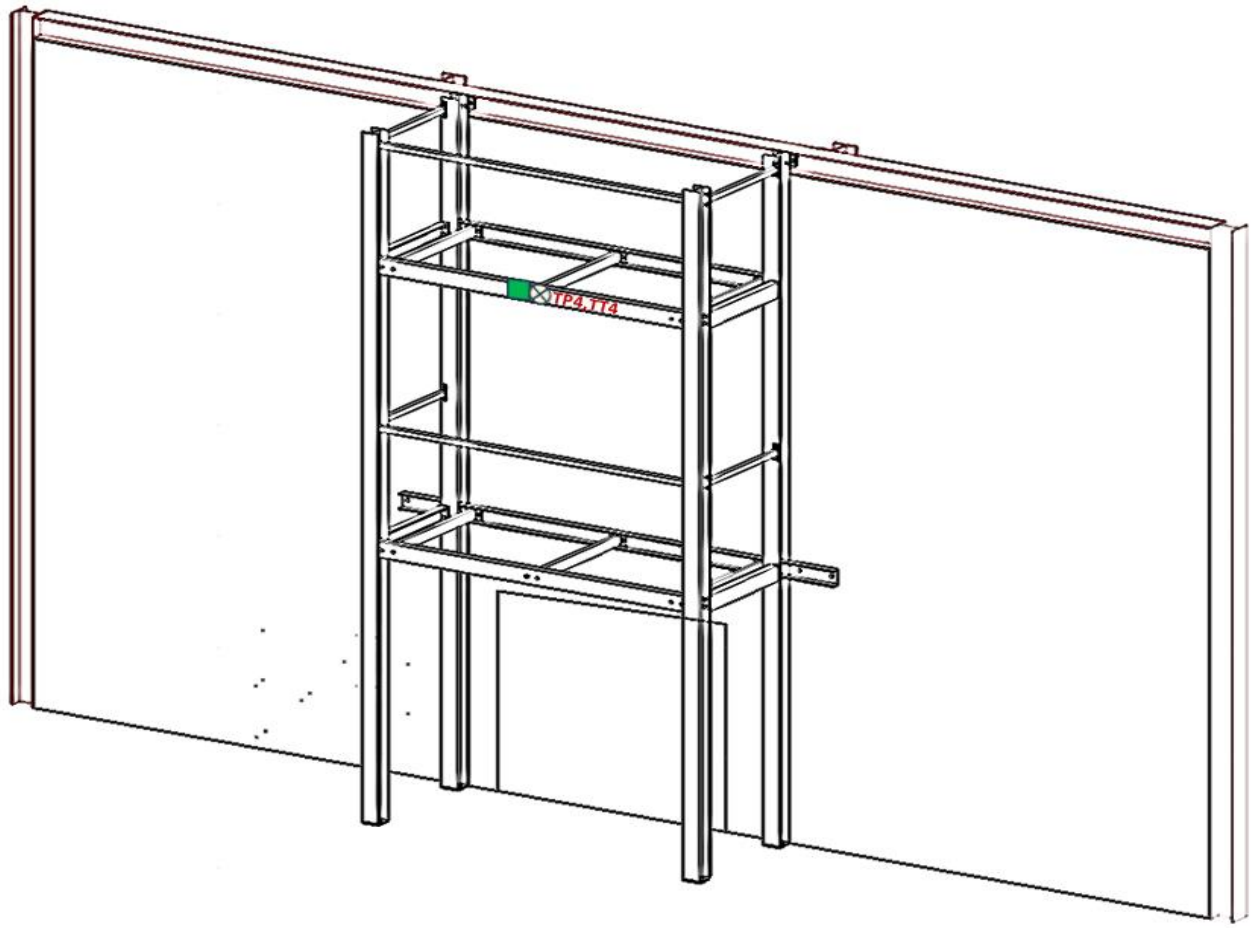

Temperature measured from the Plate TC on exposed edge at 2nd floor

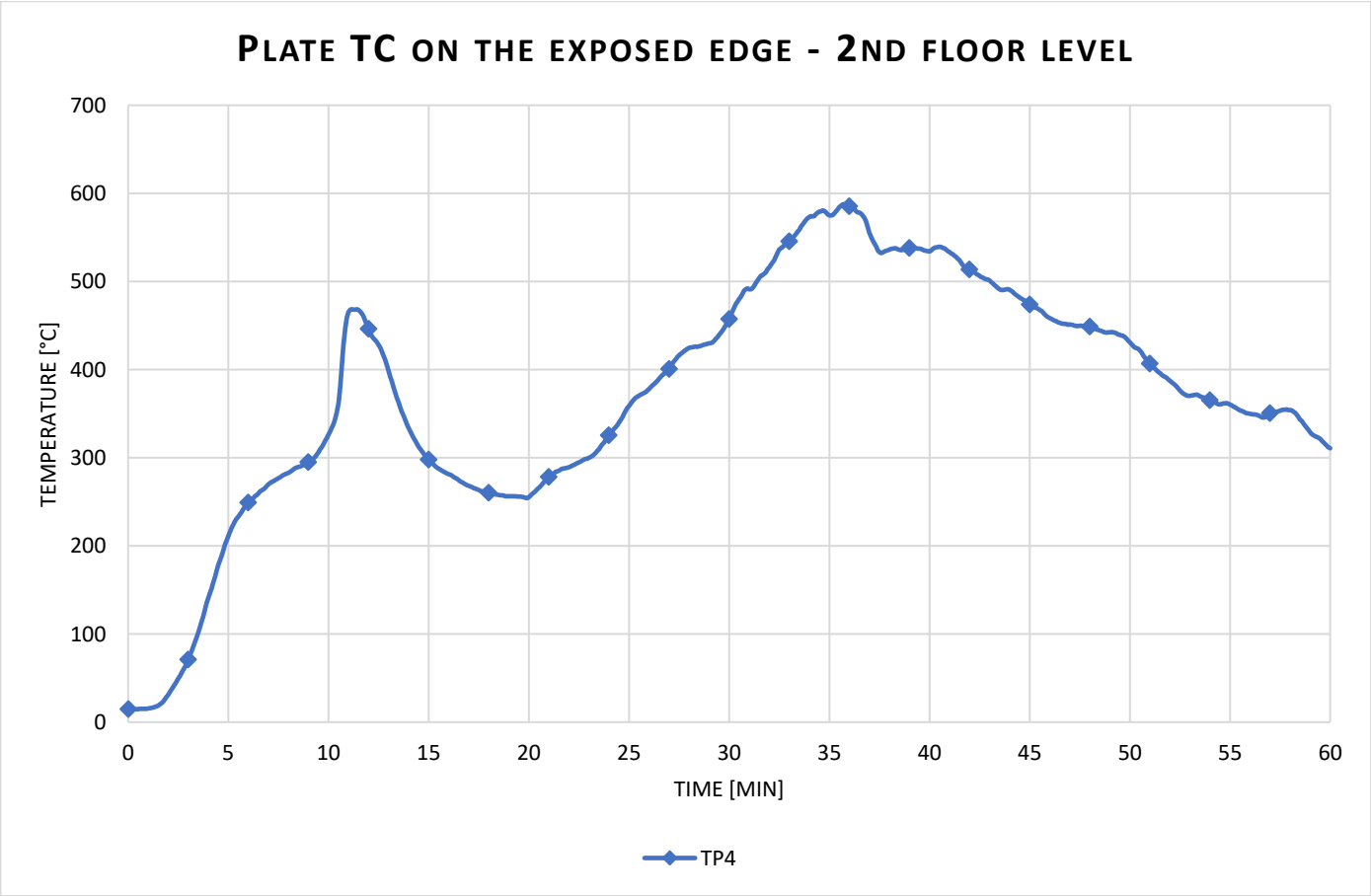

Temperature measured from the Inconel on exposed edge at 2nd floor

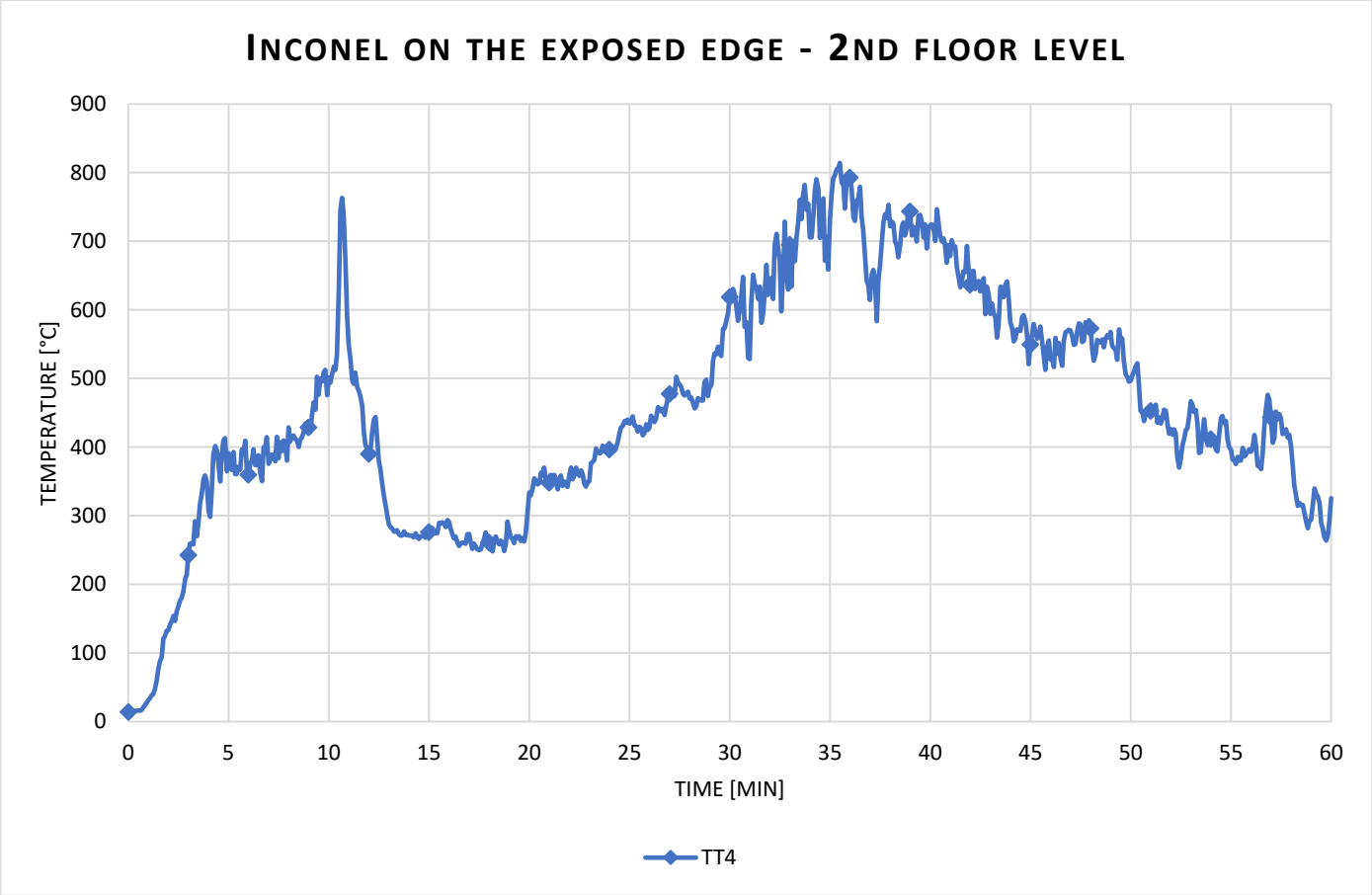

Radiant heat calculated from Plate TC

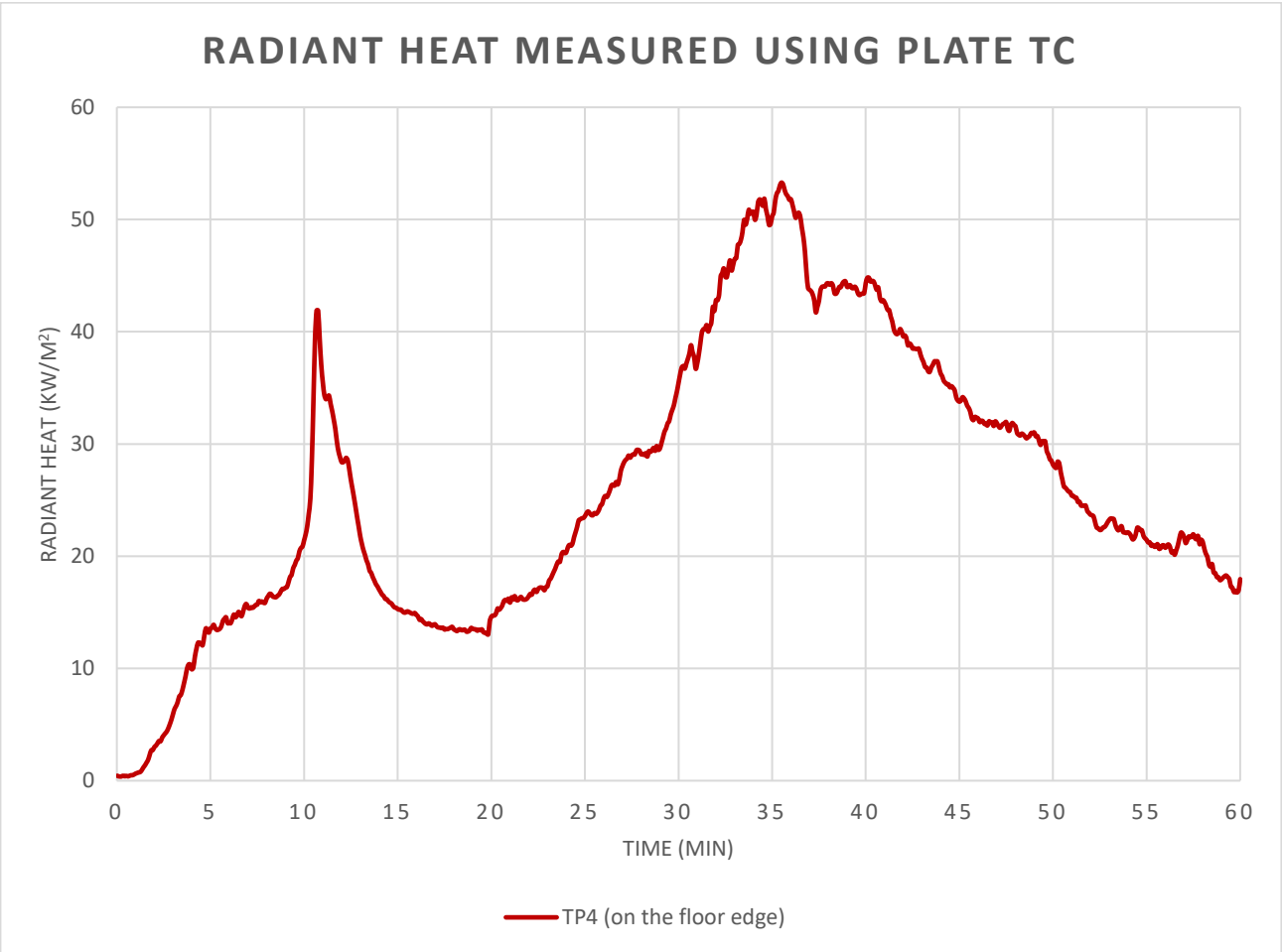

Data measurement from 1st floor handrails.

Layout

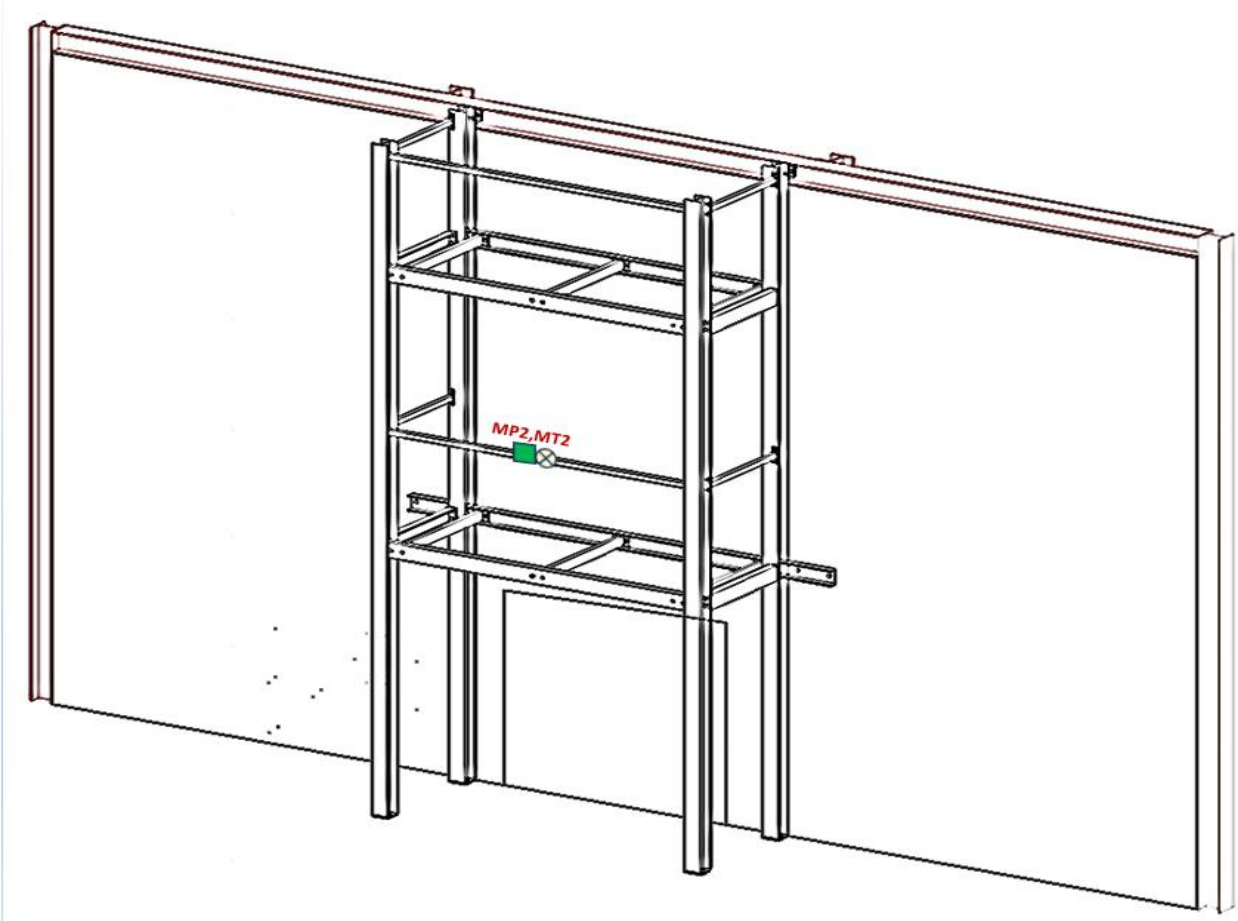

Temperature measured from the Plate TC on 1st floor handrails

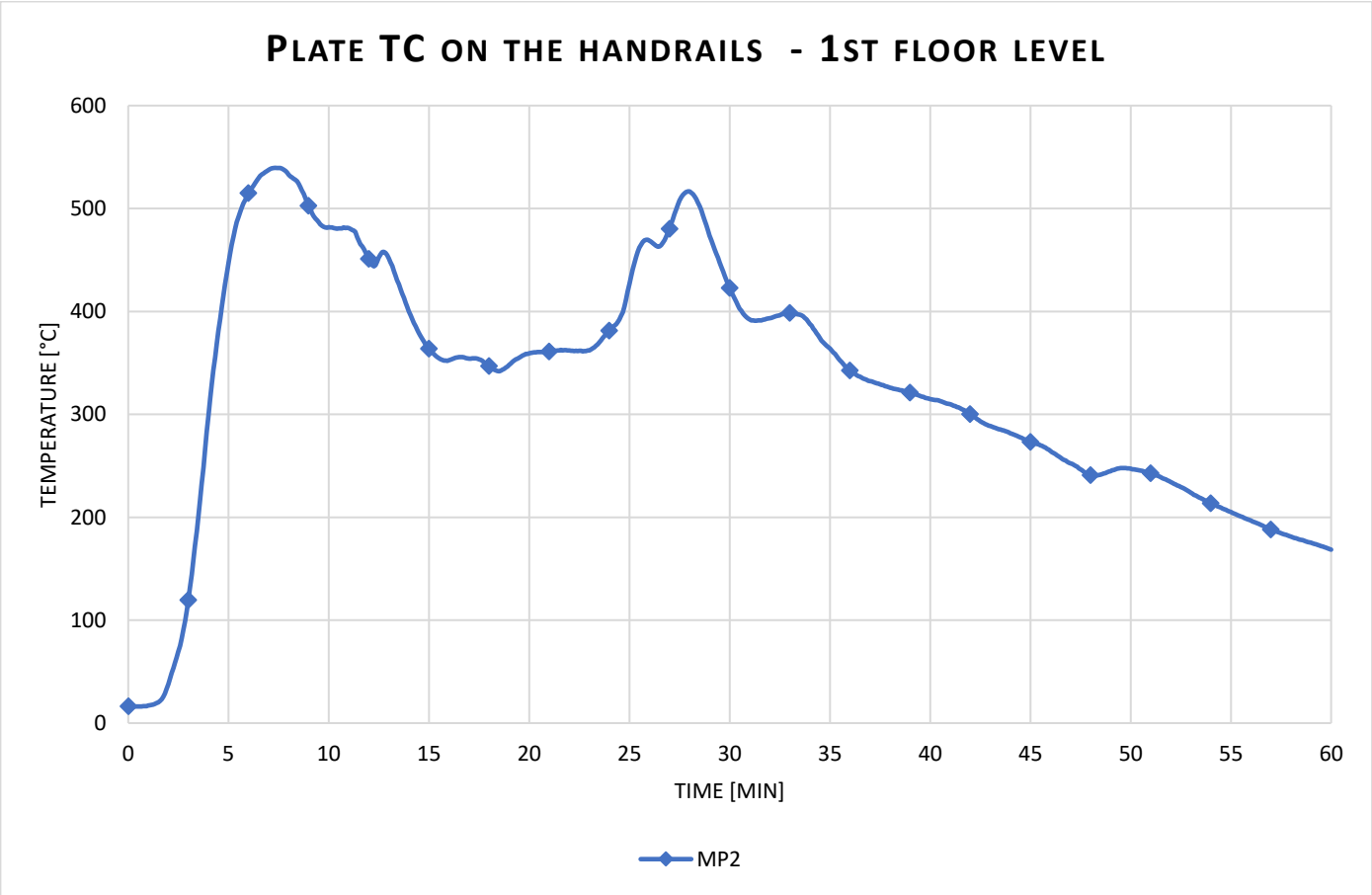

Temperature measured from the Inconel on 1st floor handrails

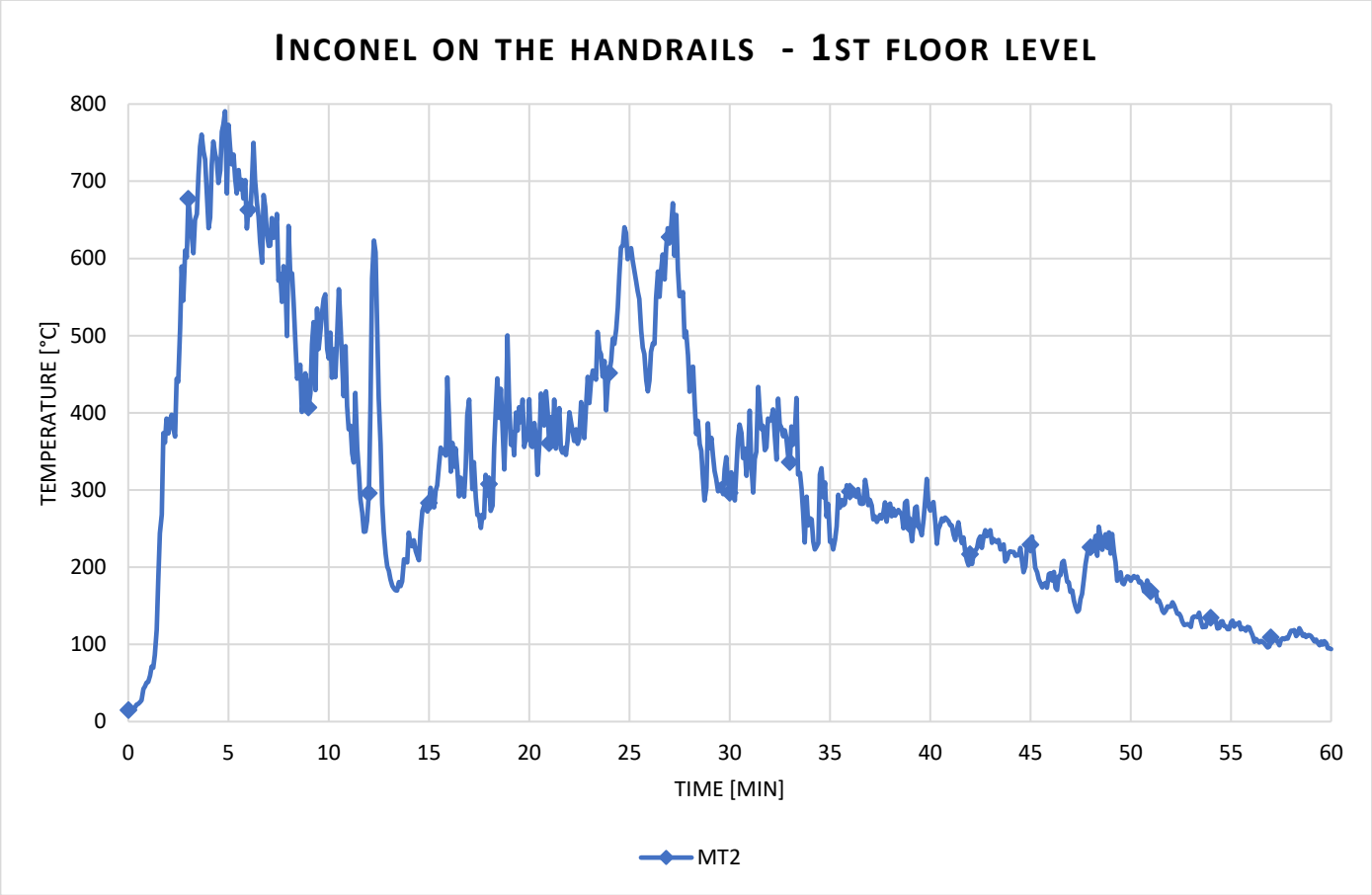

Radiant heat calculated from Plate TC

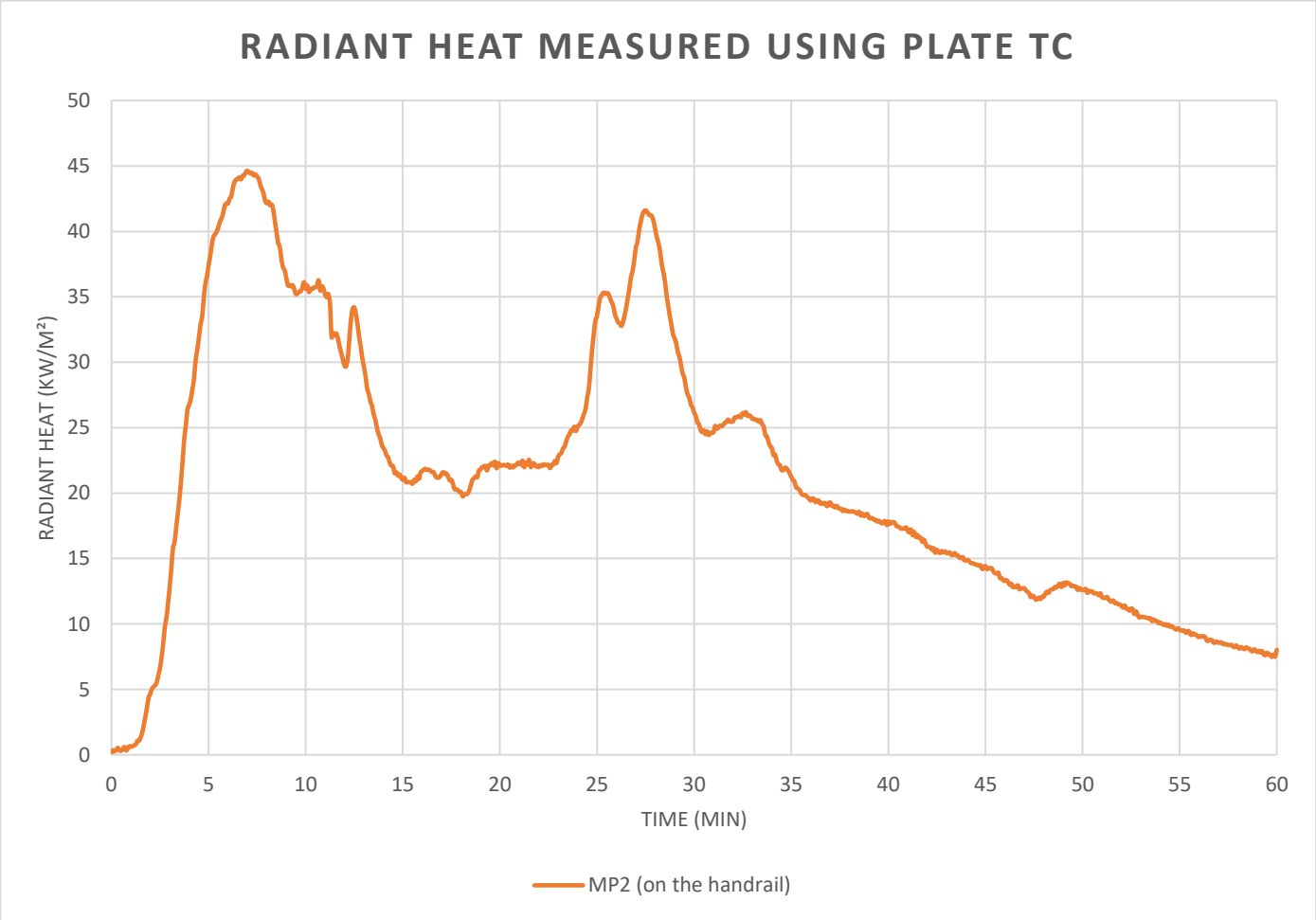

Data measurement from 2nd floor handrails.

Layout

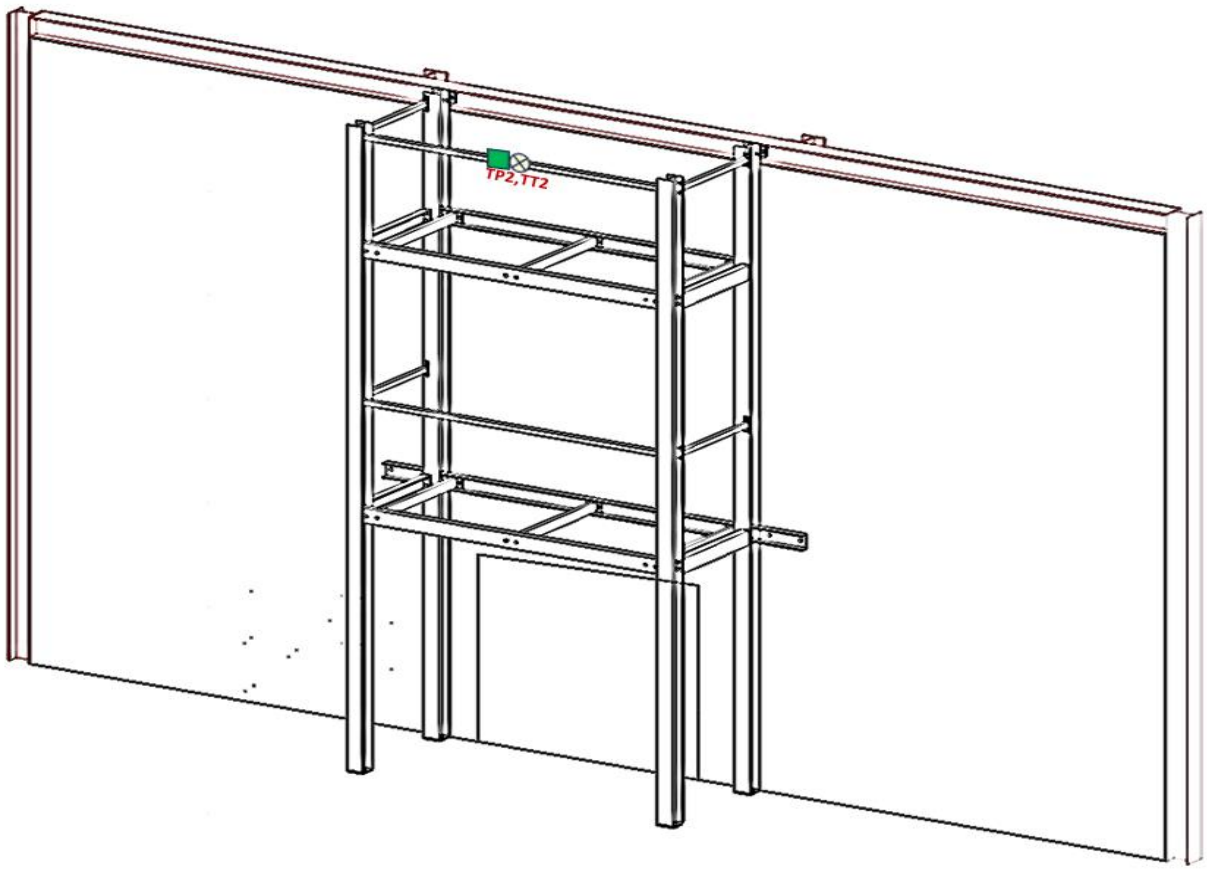

Temperature measured from the Plate TC on 2nd floor handrails.

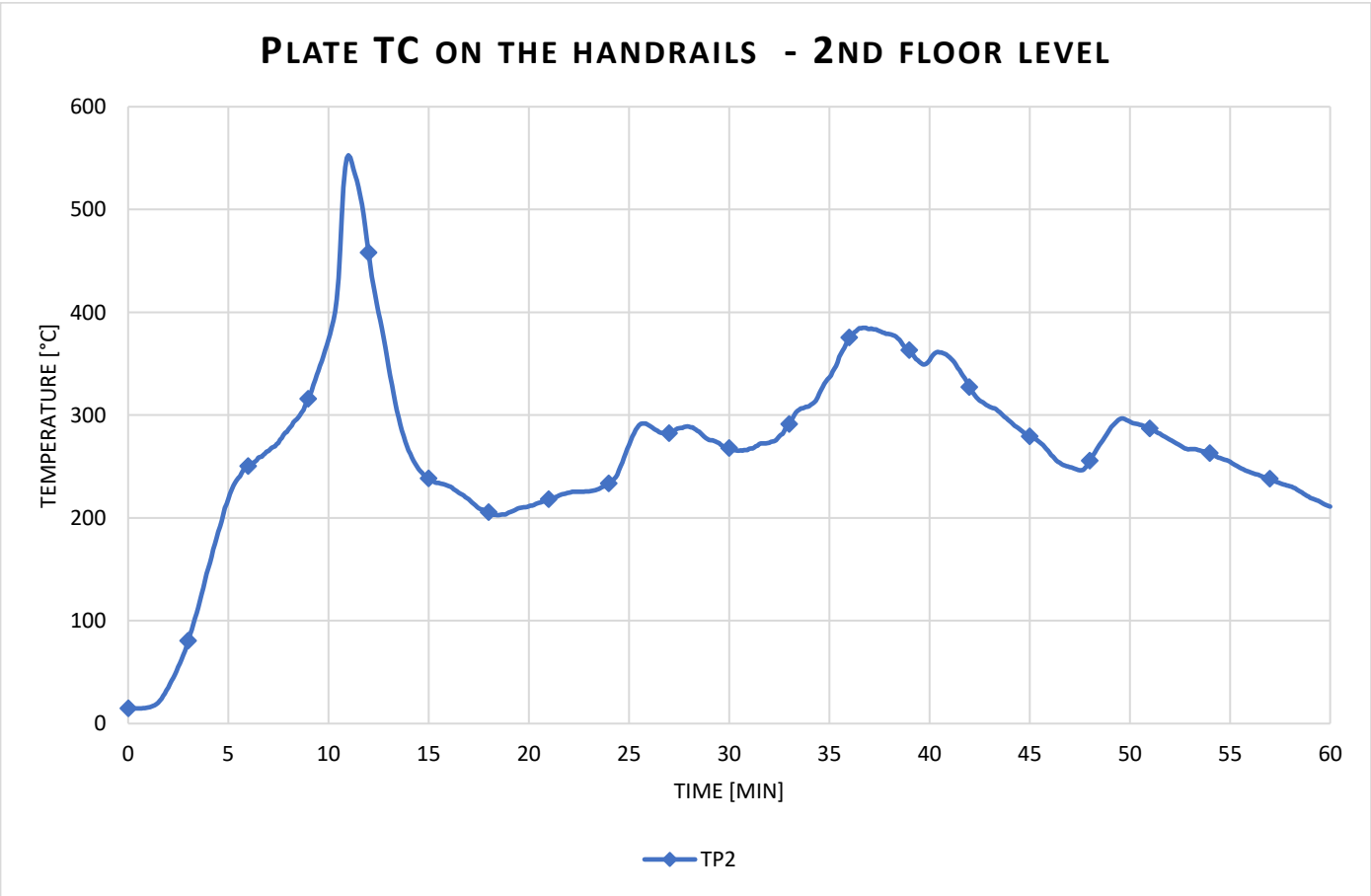

Temperature measured from the Inconel on 2nd floor handrails

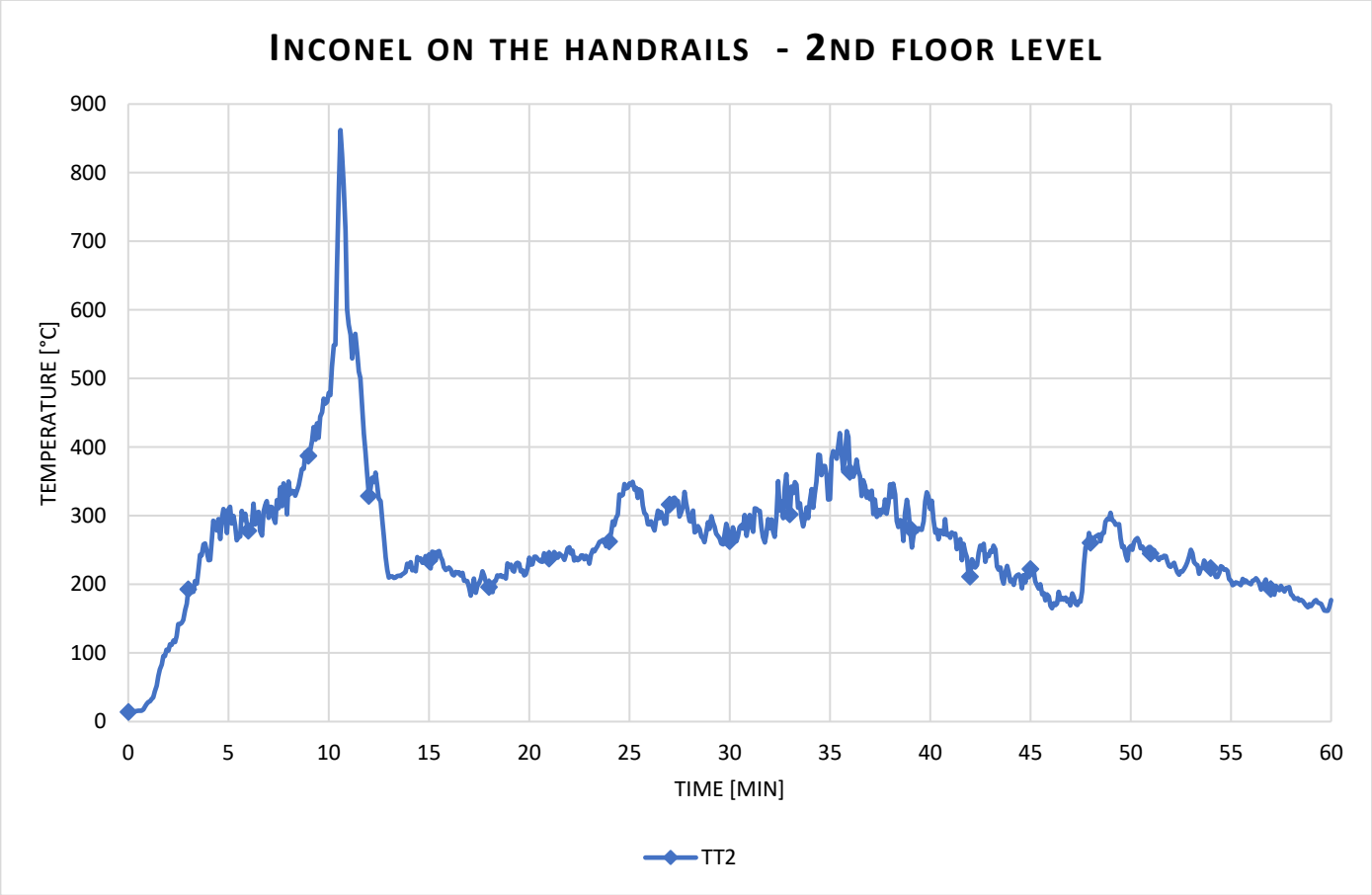

Radiant heat calculated from Plate TC

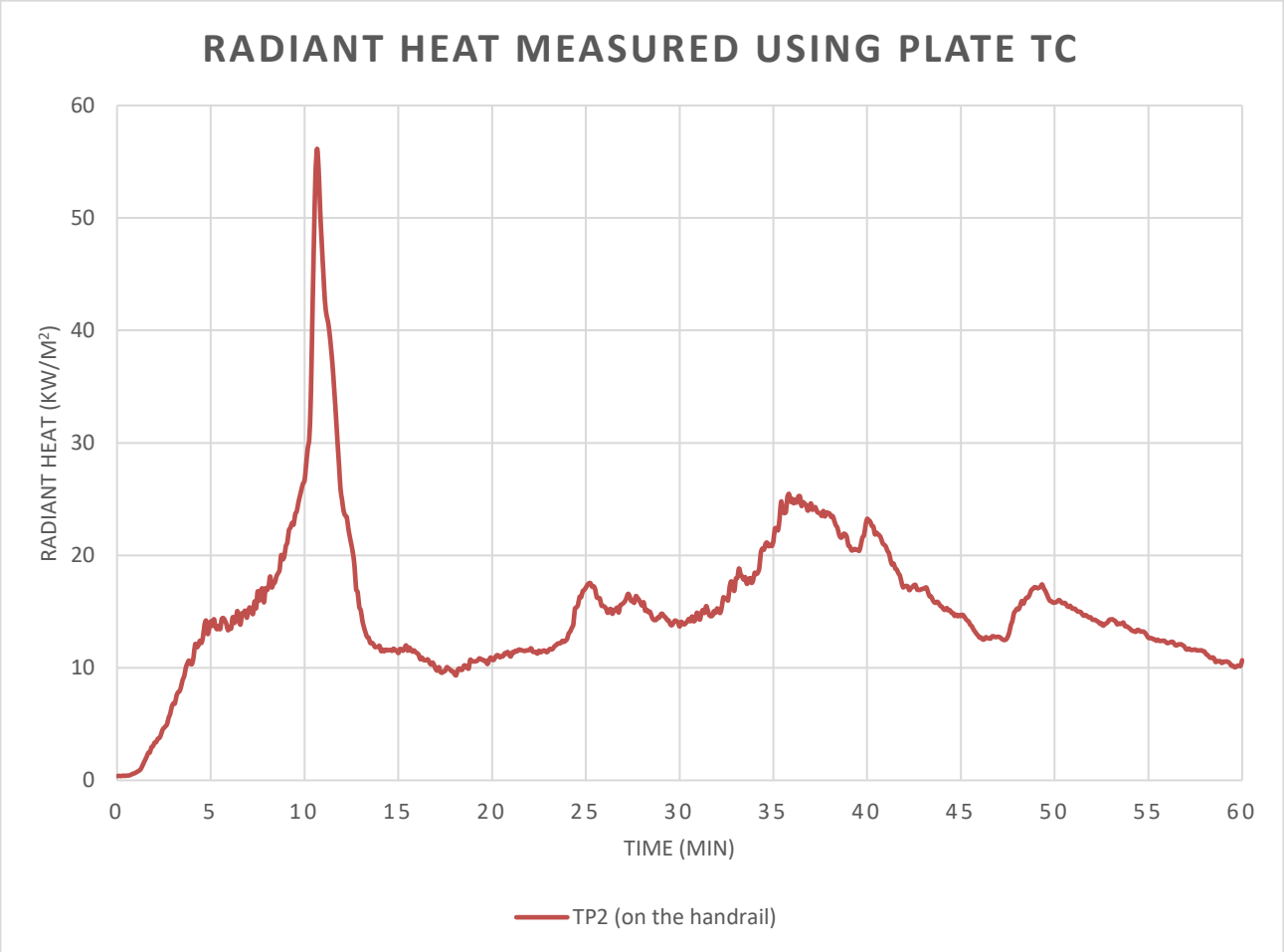

Data measurement from Ground floor sidewalls

Layout

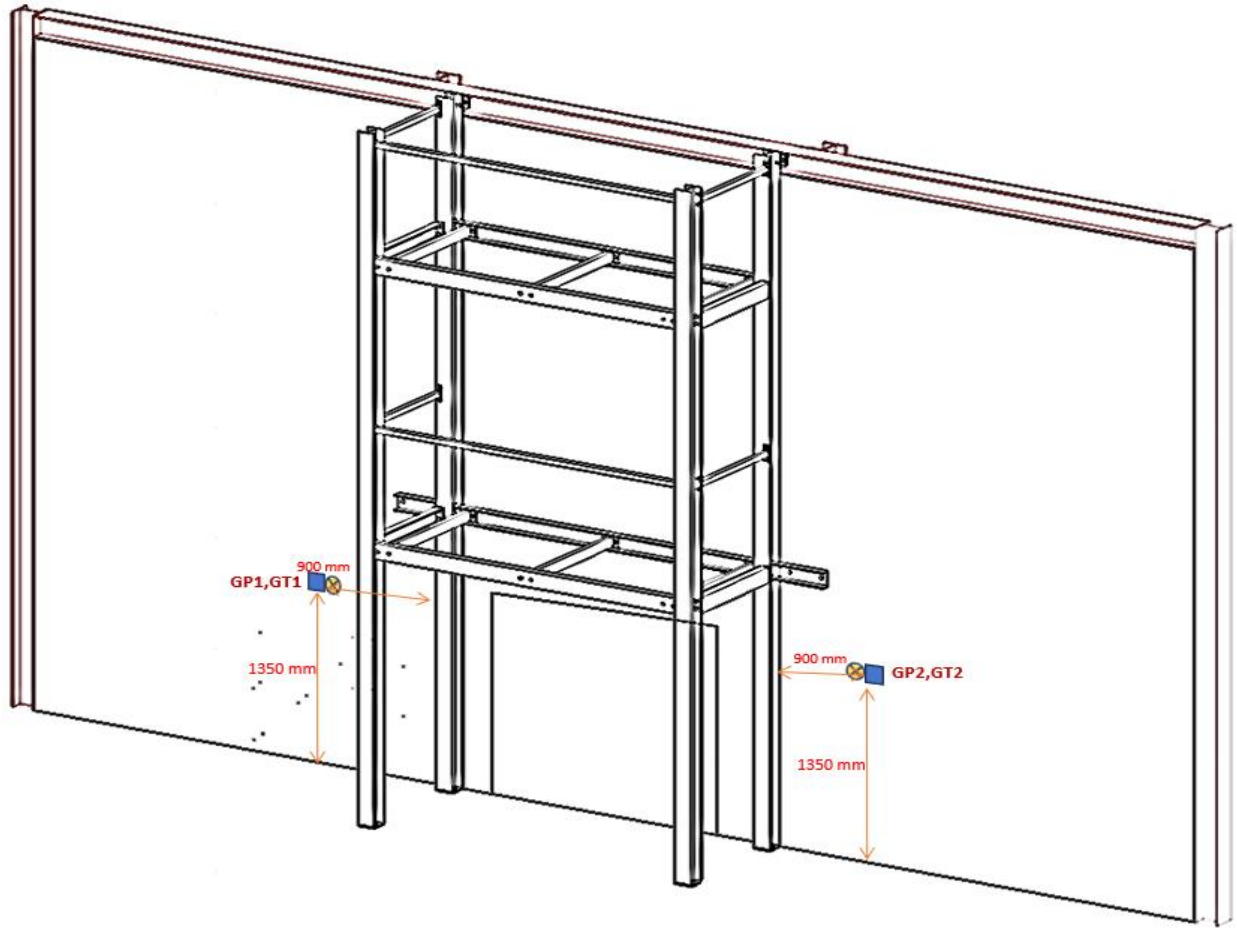

Temperature measured from the Plate TC's from Ground floor sidewalls

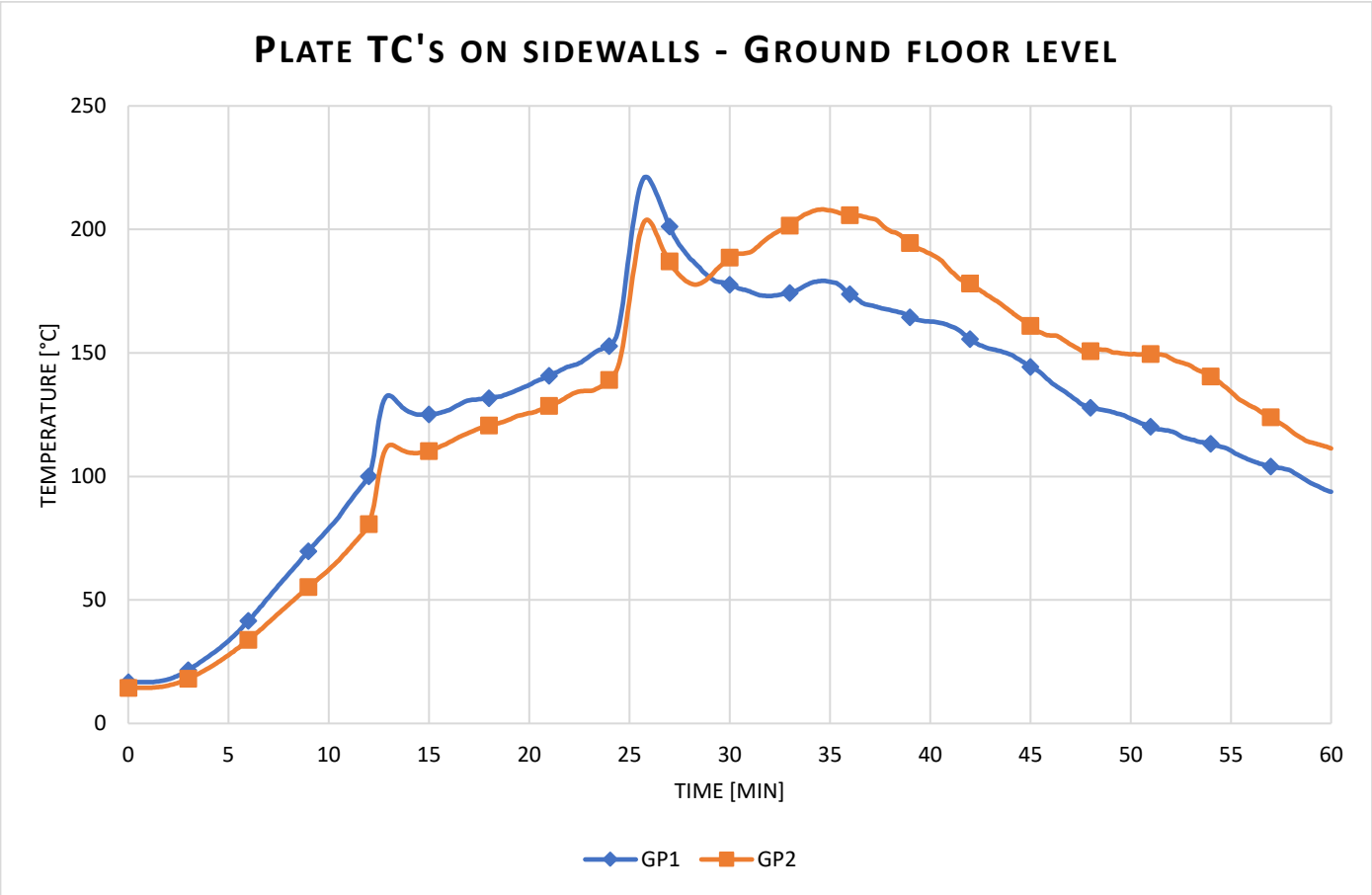

Temperature measured from the Inconel from 1st floor sidewall

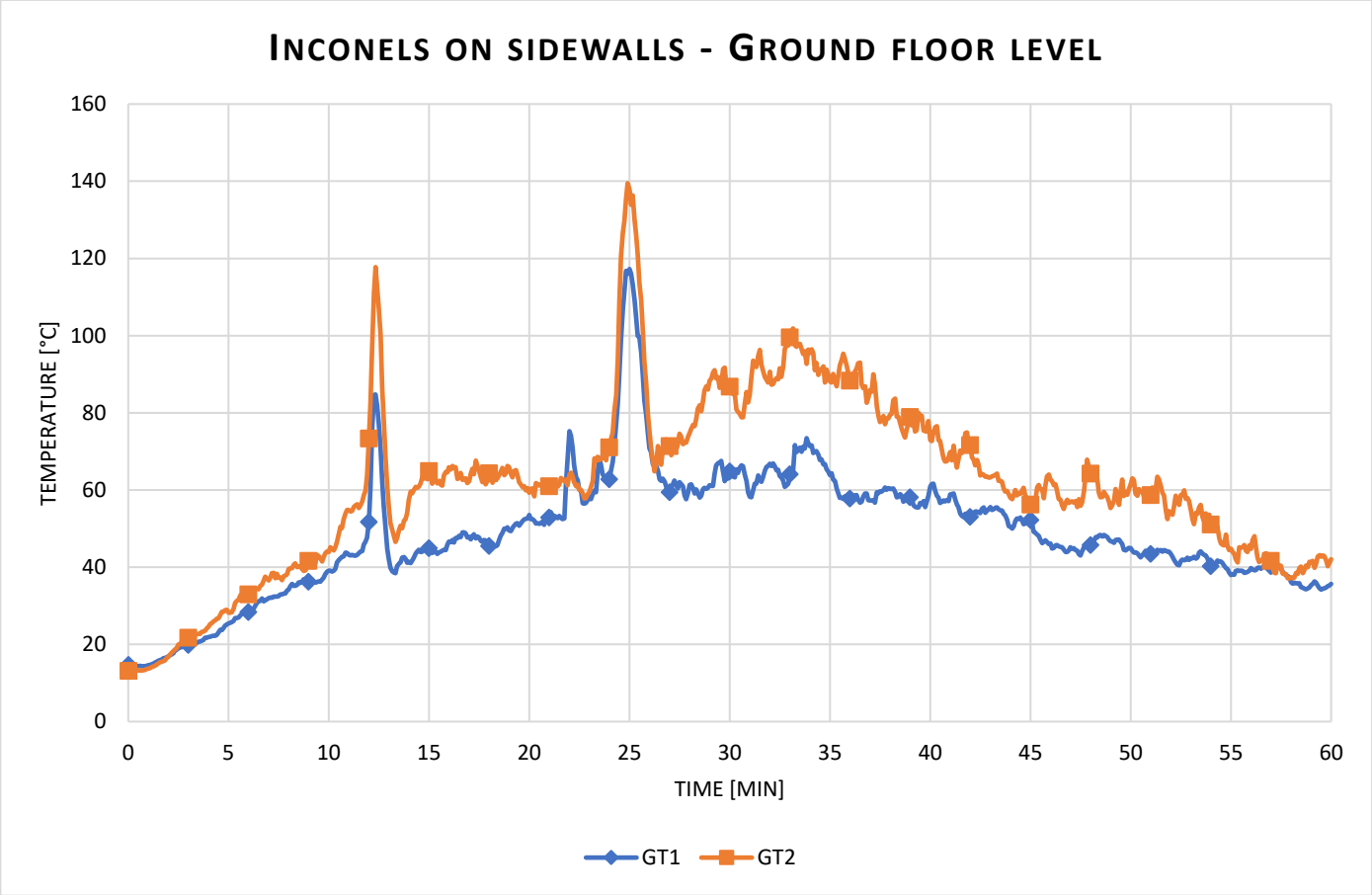

Radiant heat calculated from Plate TC's

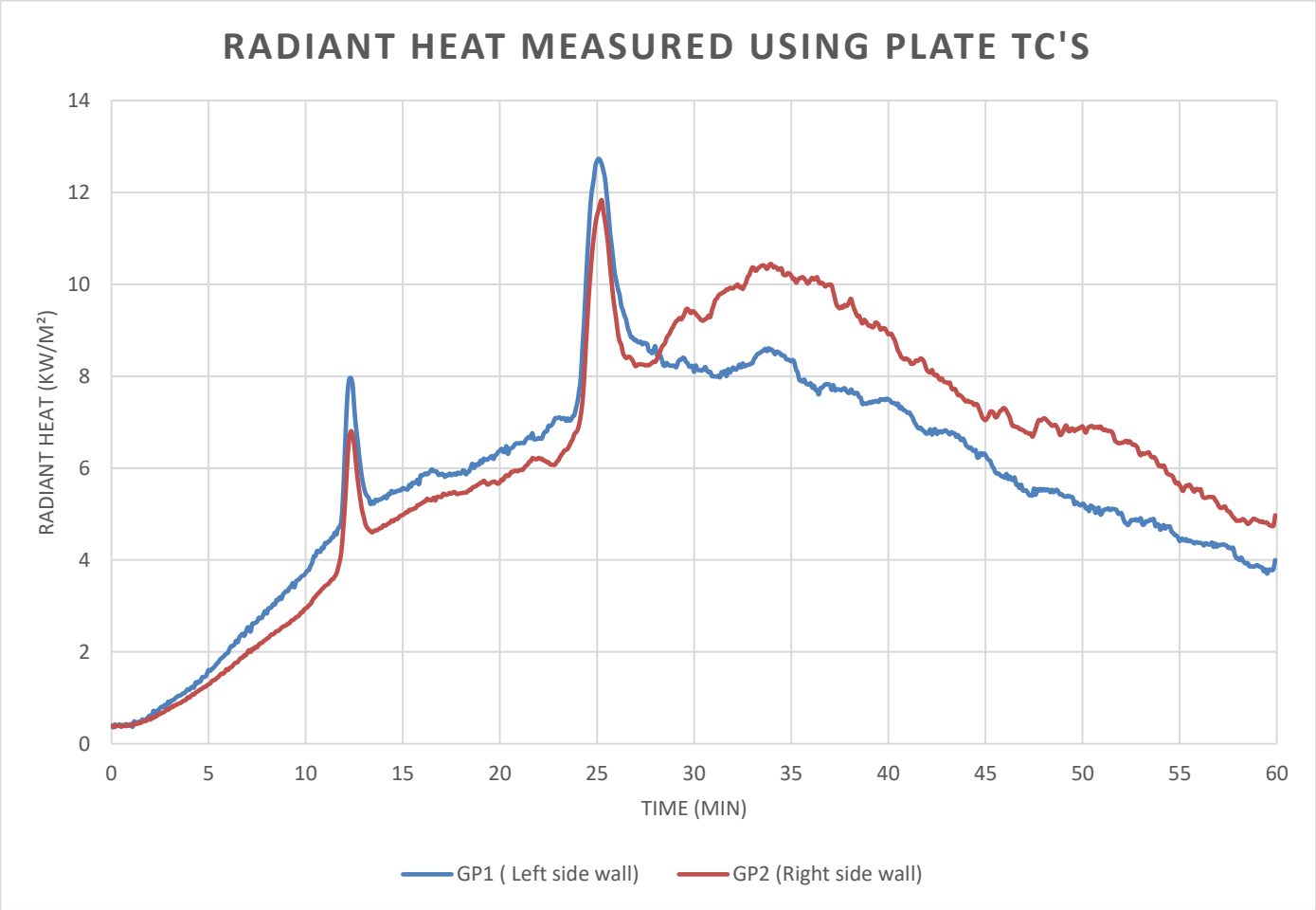

Data measurement from 1st floor sidewall

Layout

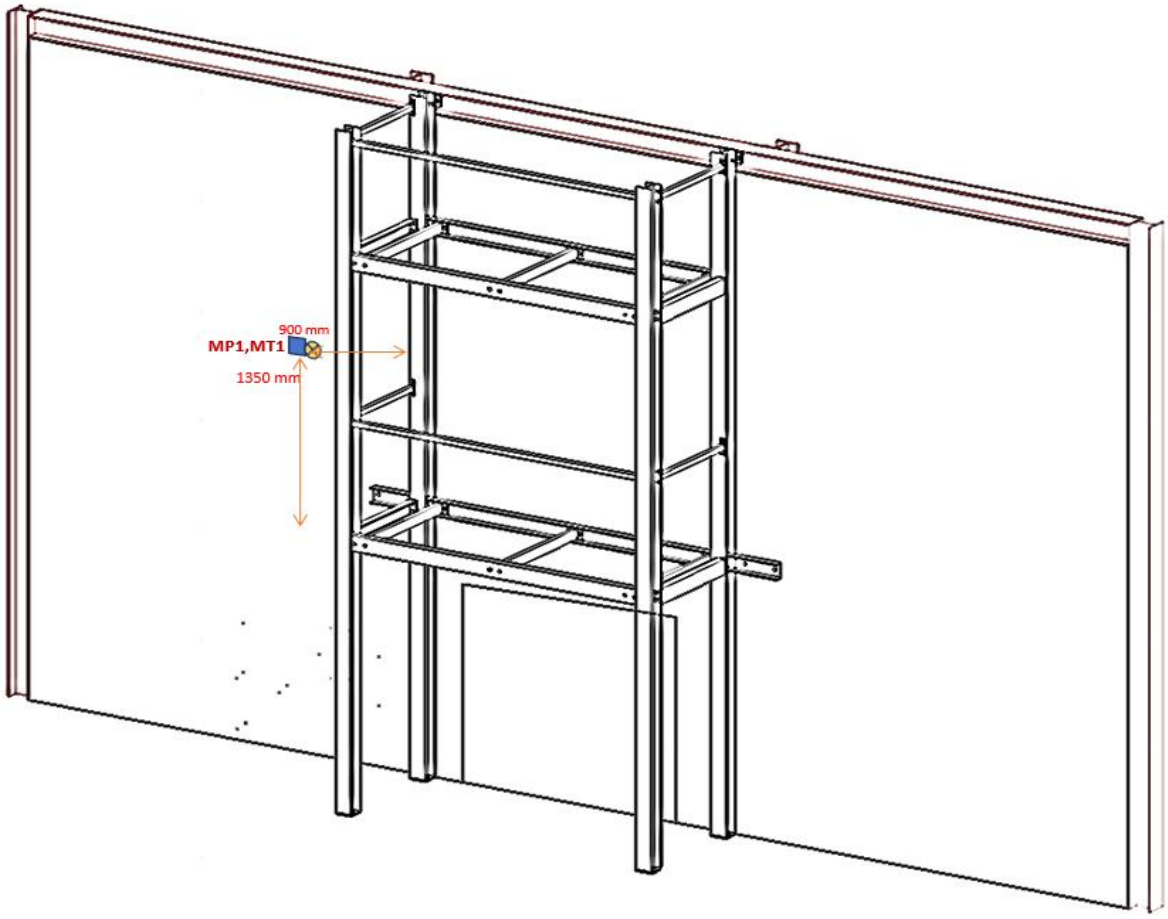

Temperature measured from the Plate TC from 1st floor sidewall

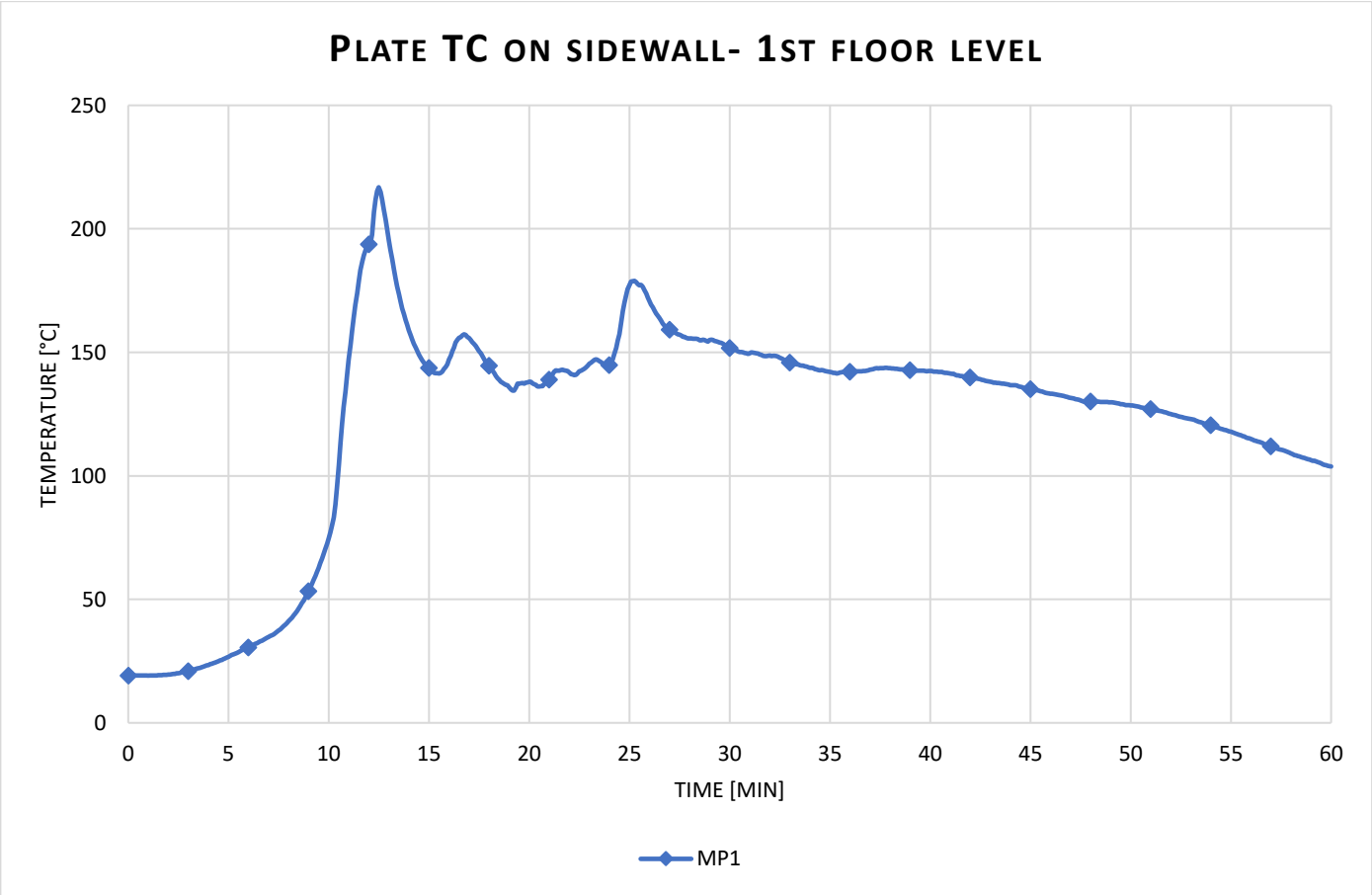

Temperature measured from the Inconel from 1st floor sidewall

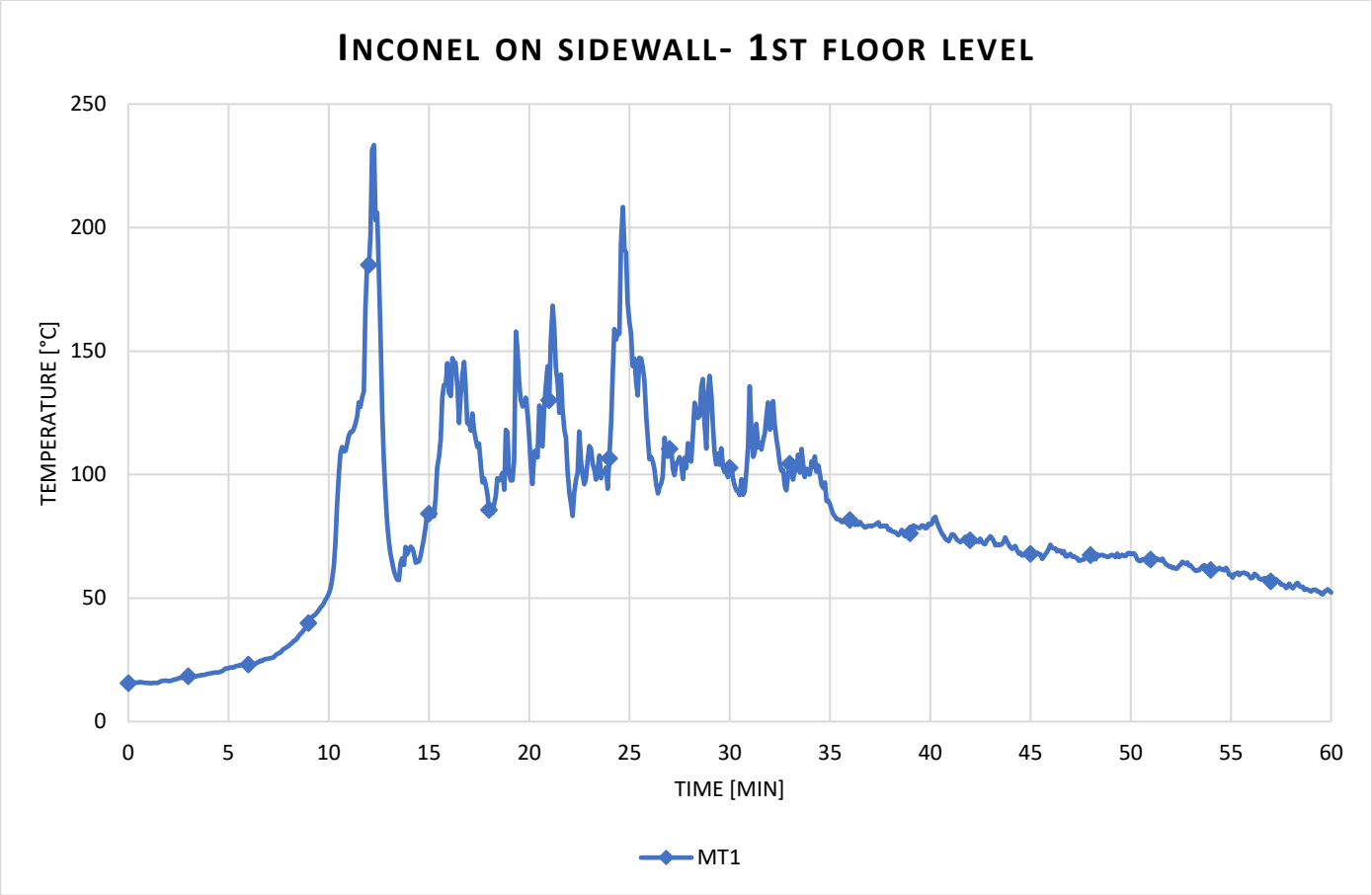

Radiant heat calculated from Plate TC

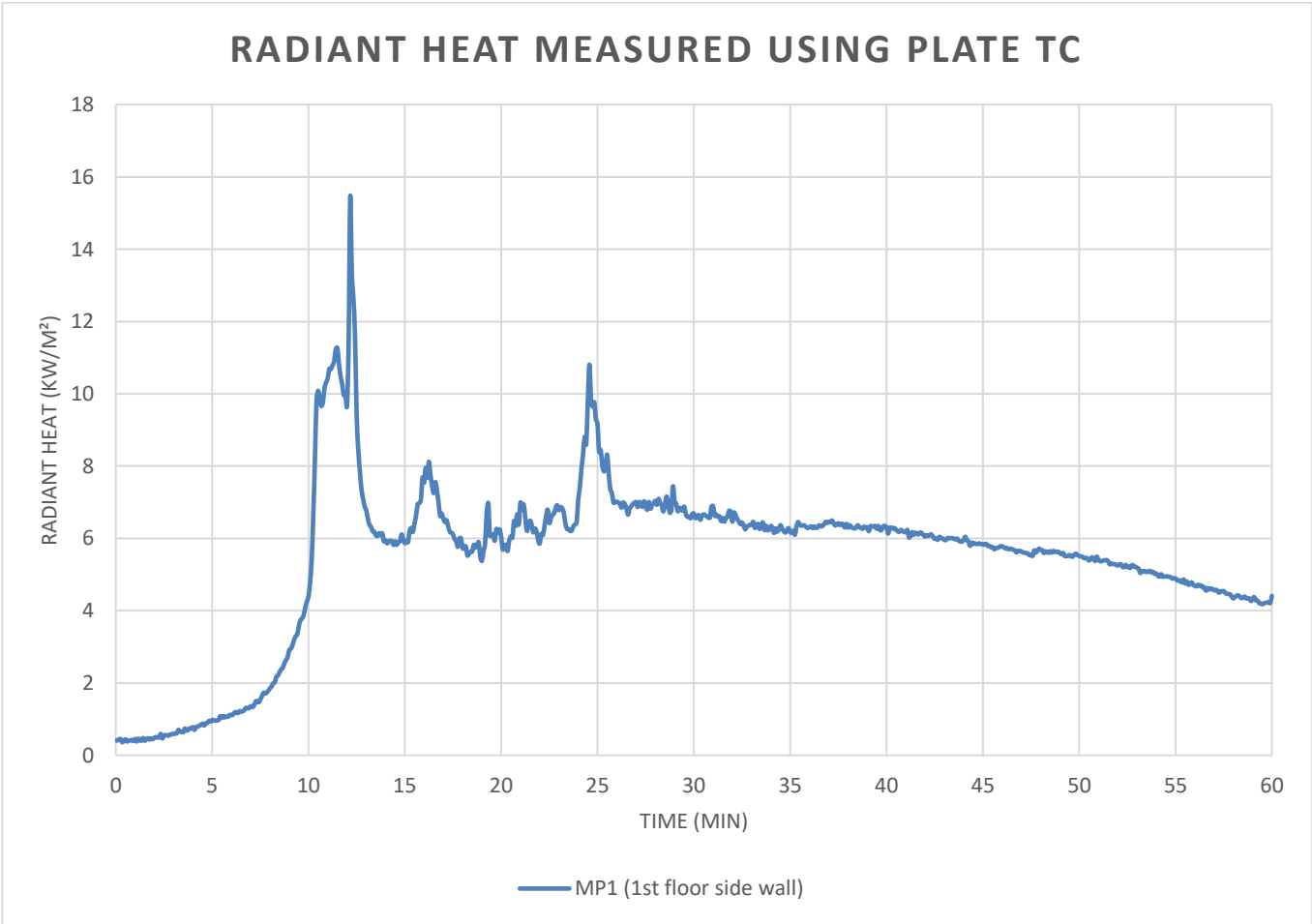

Data measurement from 2nd floor sidewall

Layout

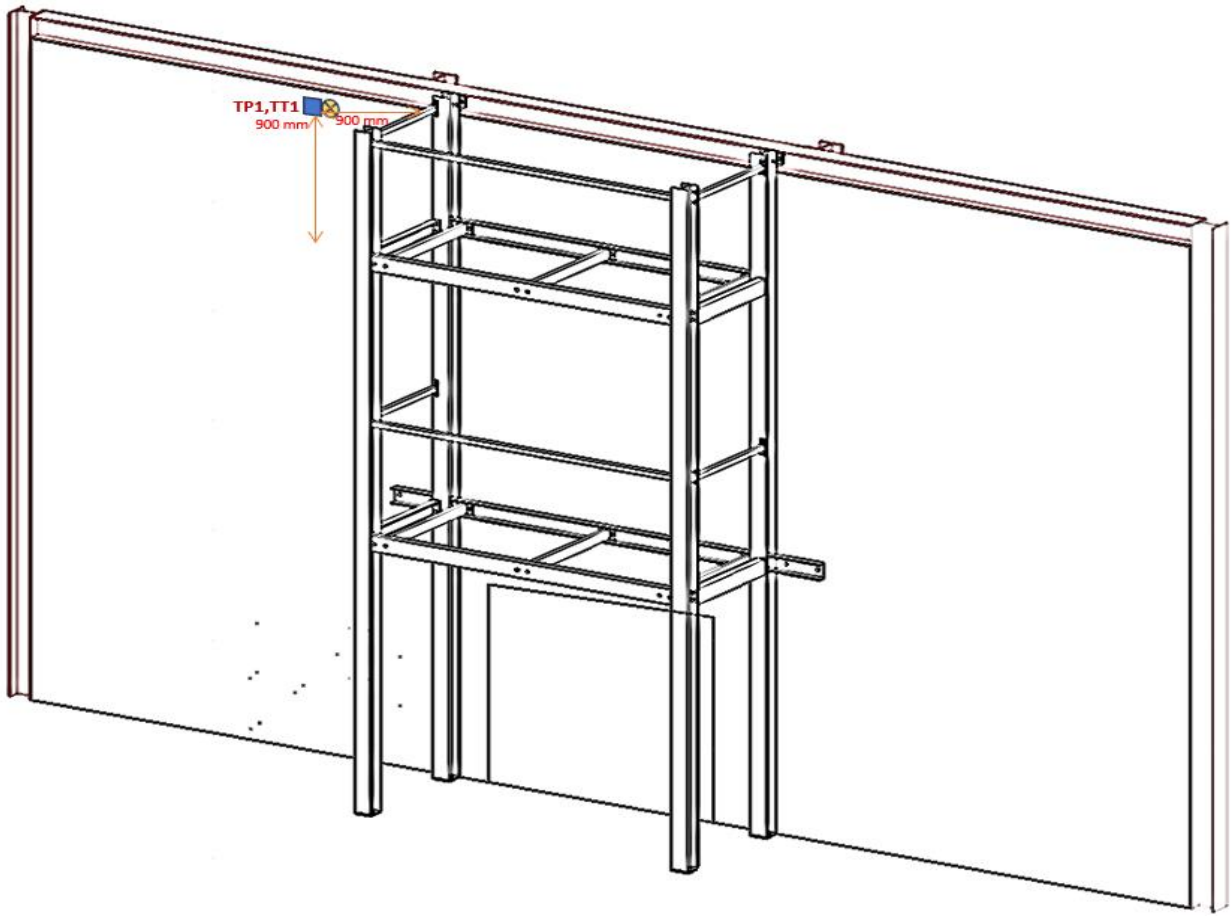

Temperature measured from the Plate TC from 2nd floor sidewall

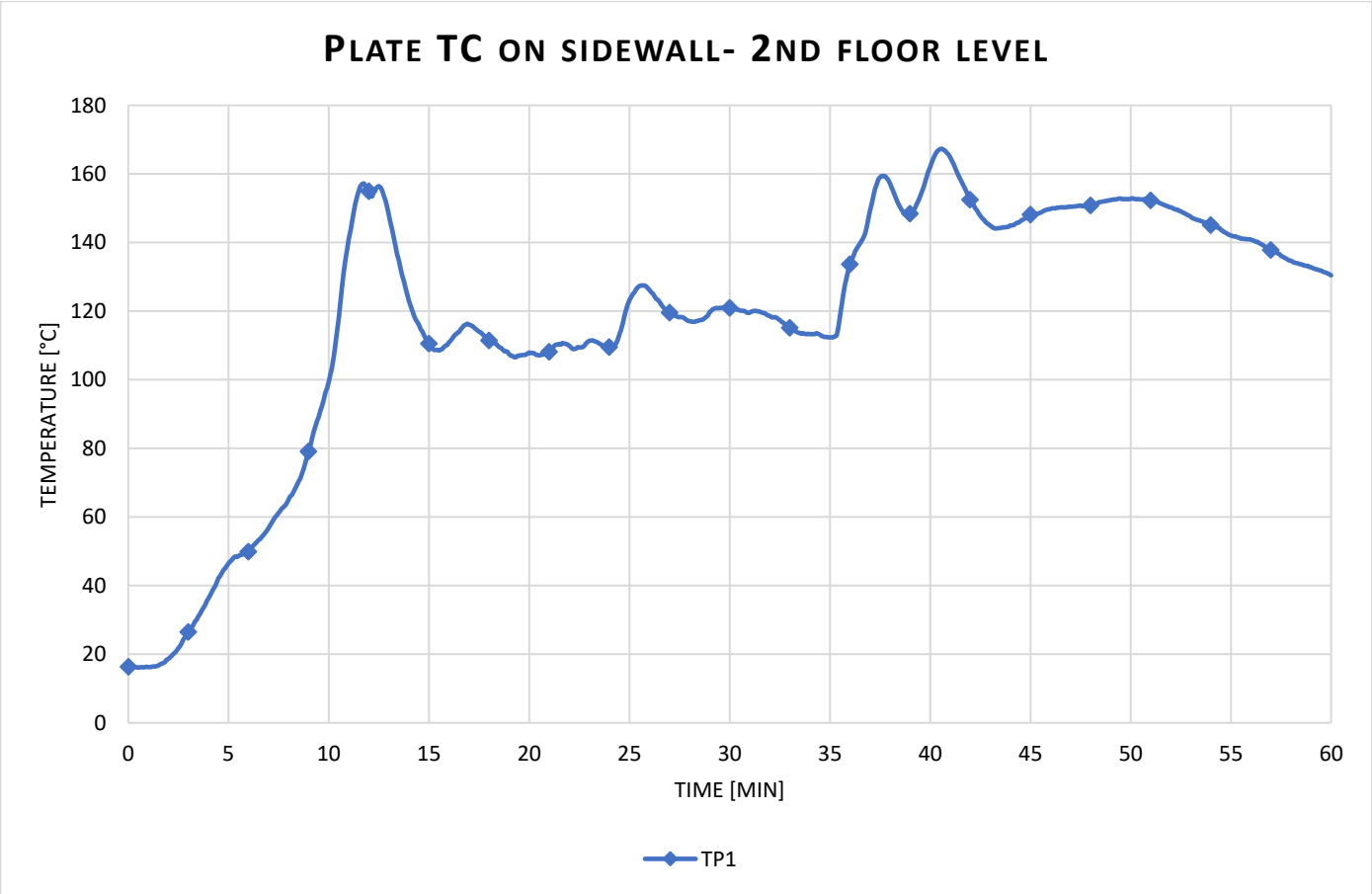

Temperature measured from the Inconel from 2nd floor sidewall

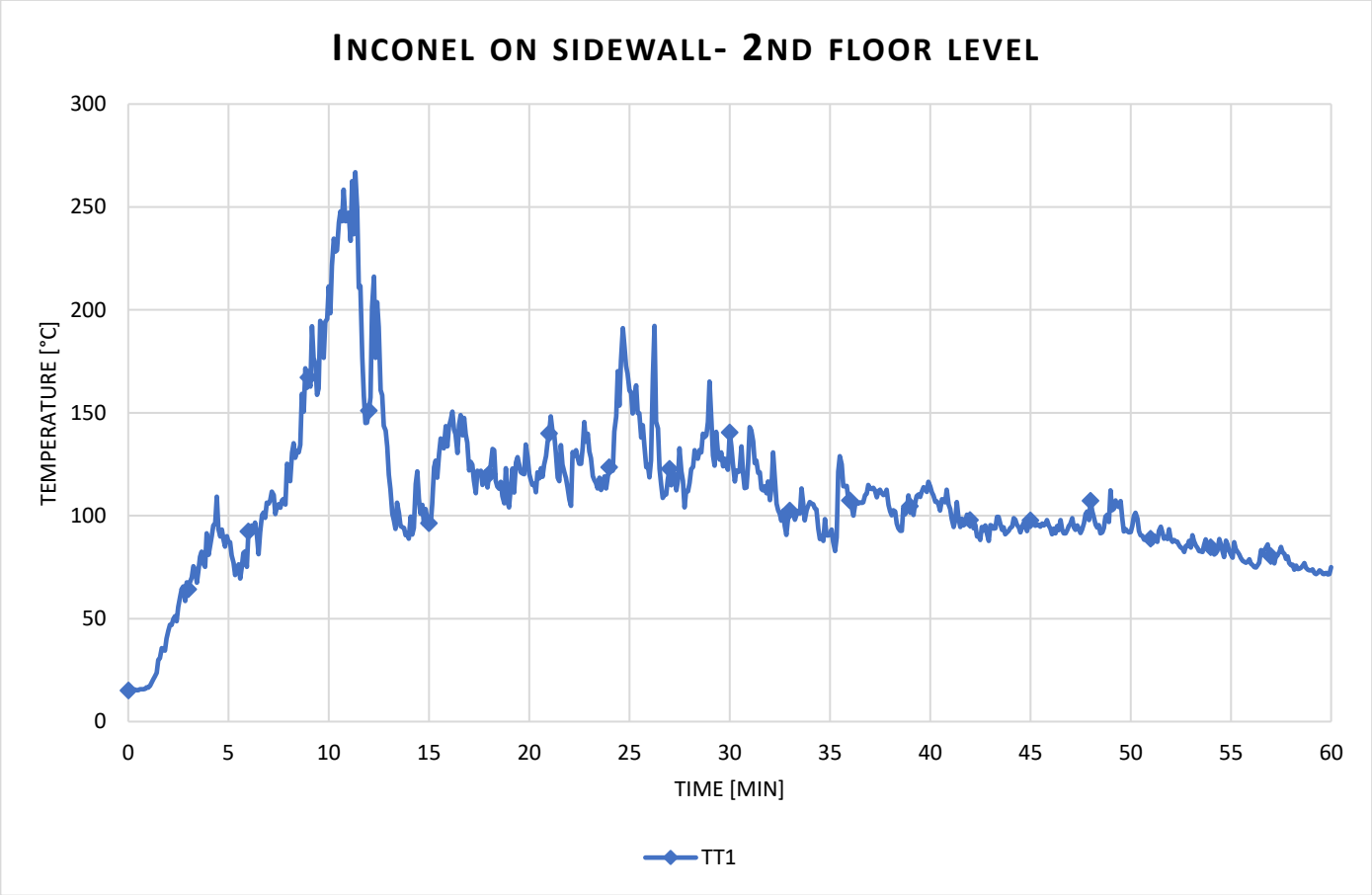

Radiant heat calculated from Plate TC

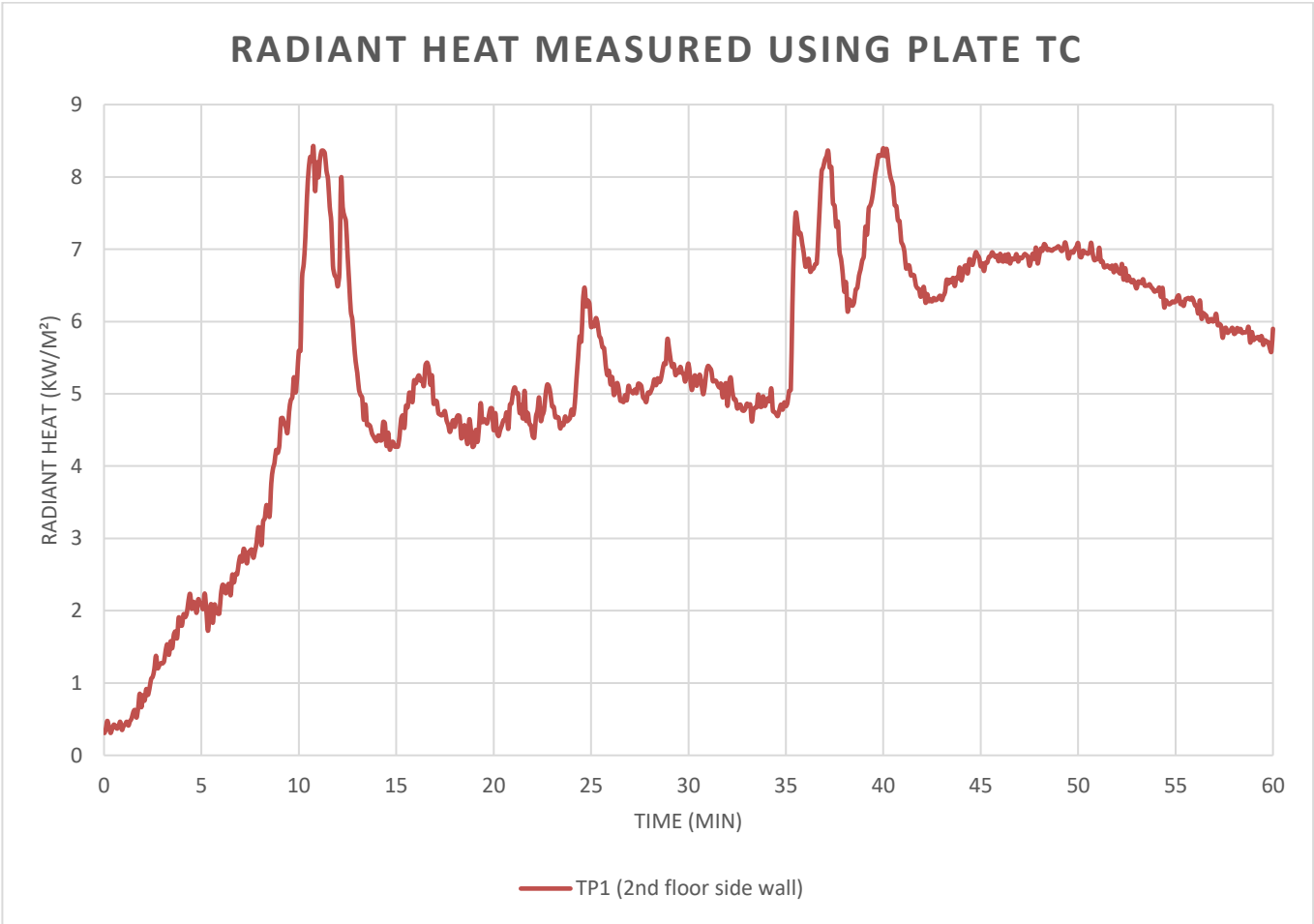

Data measurement from the steel C-section underneath 1st floor

Layout

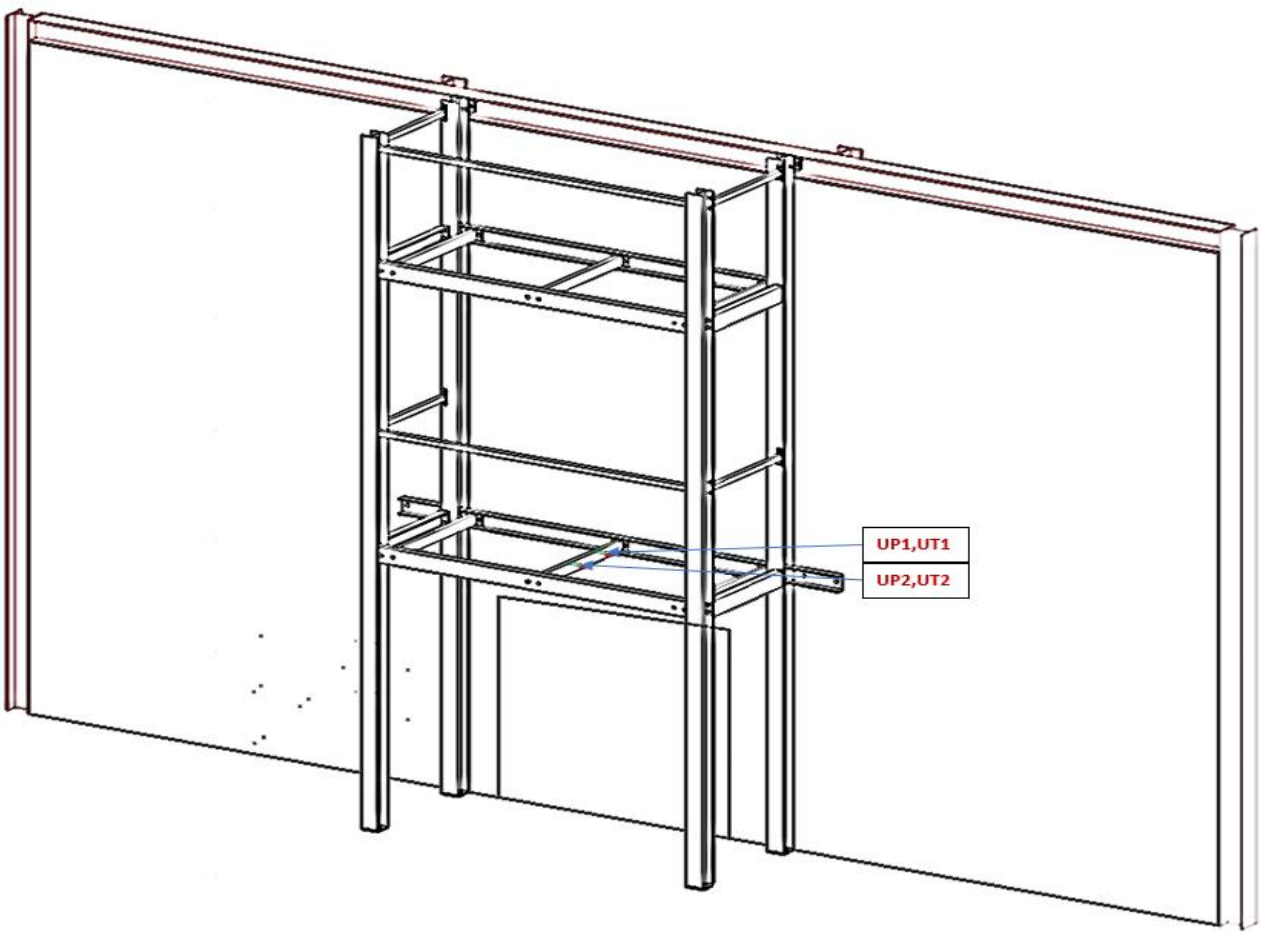

Temperature measured from the Plate TC's on the steel C-section underneath 1st floor

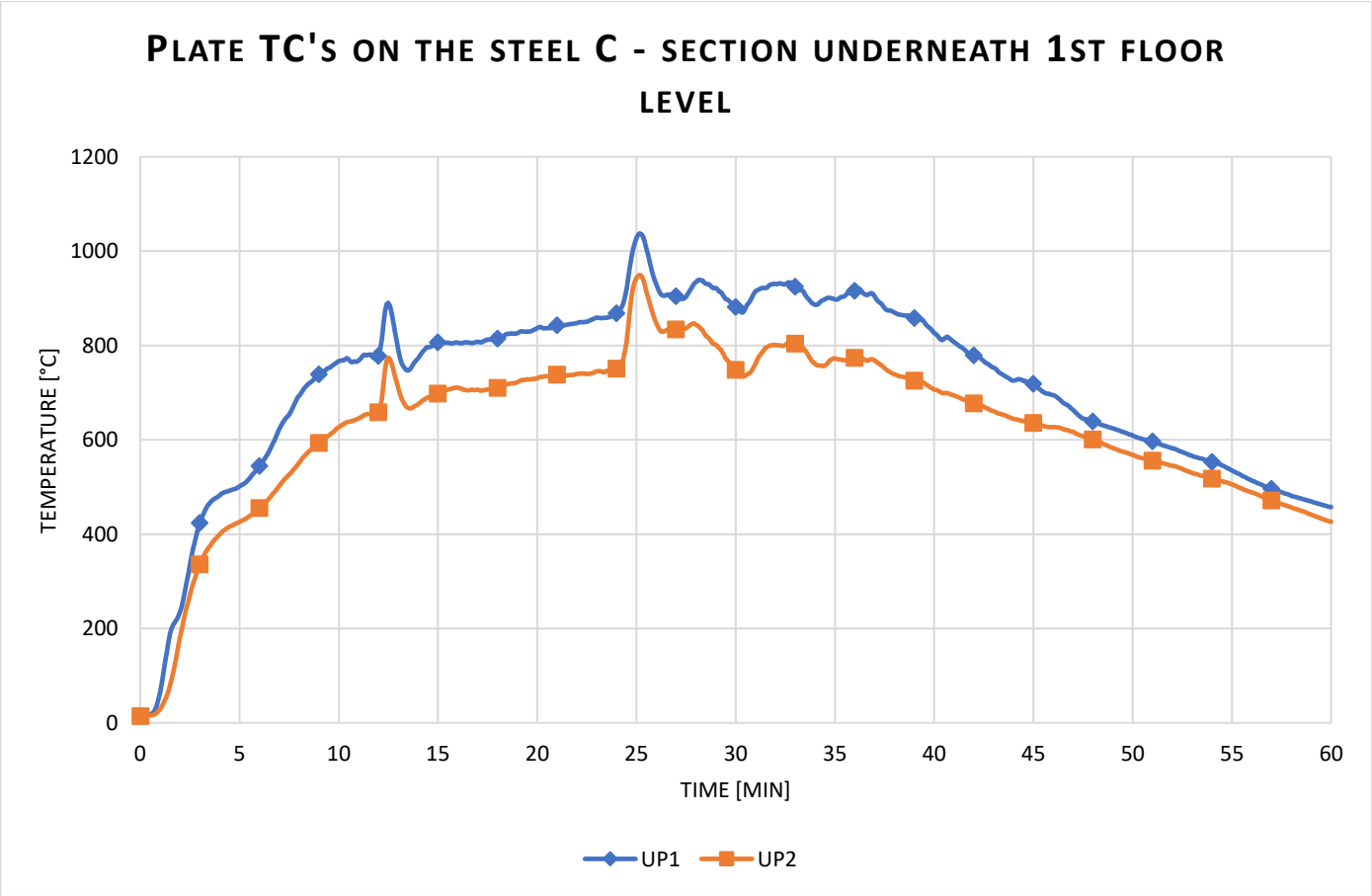

Temperature measured from the Inconels on the steel C-section underneath 1st floor

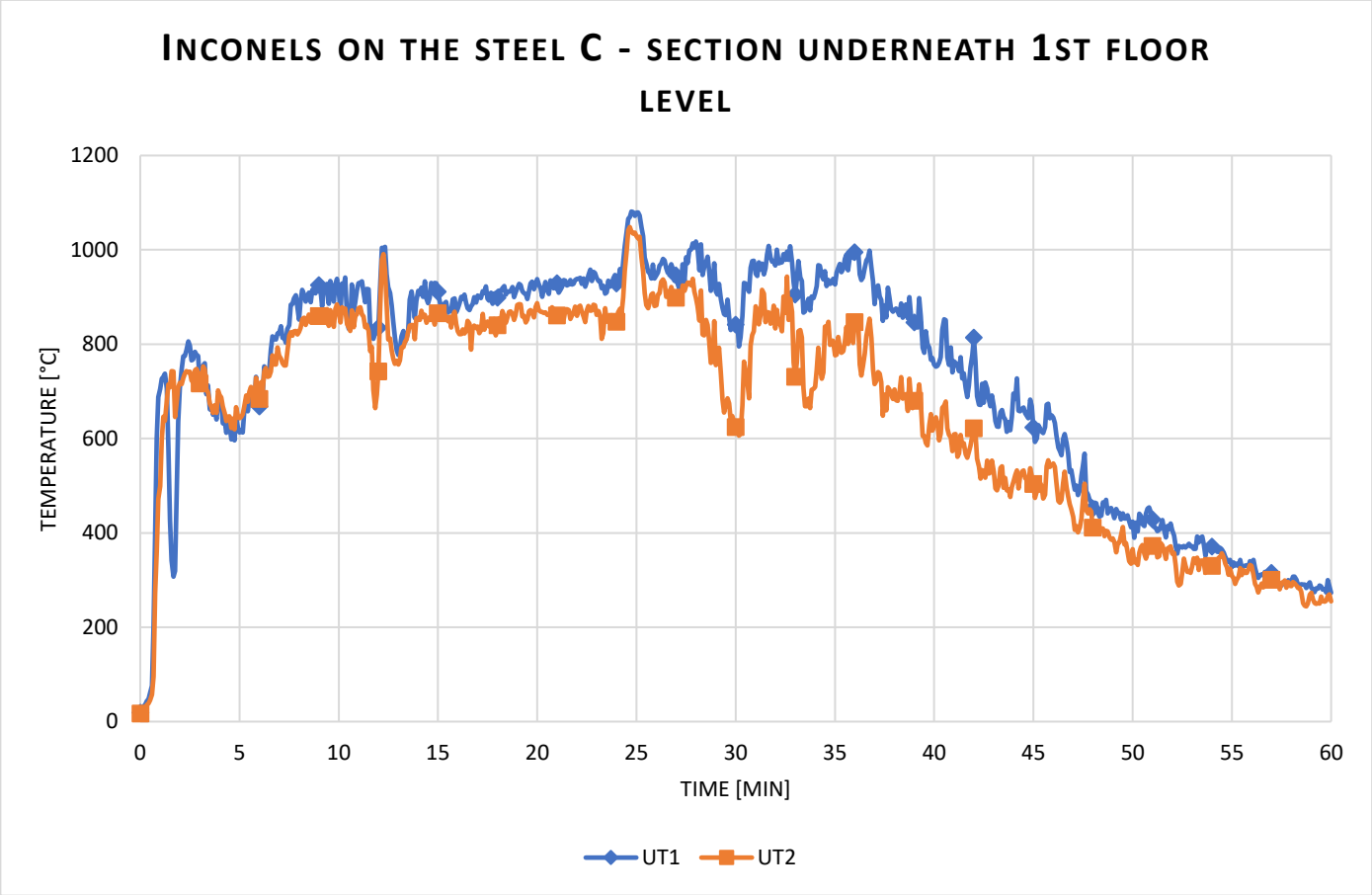

Radiant heat calculated from Plate TC

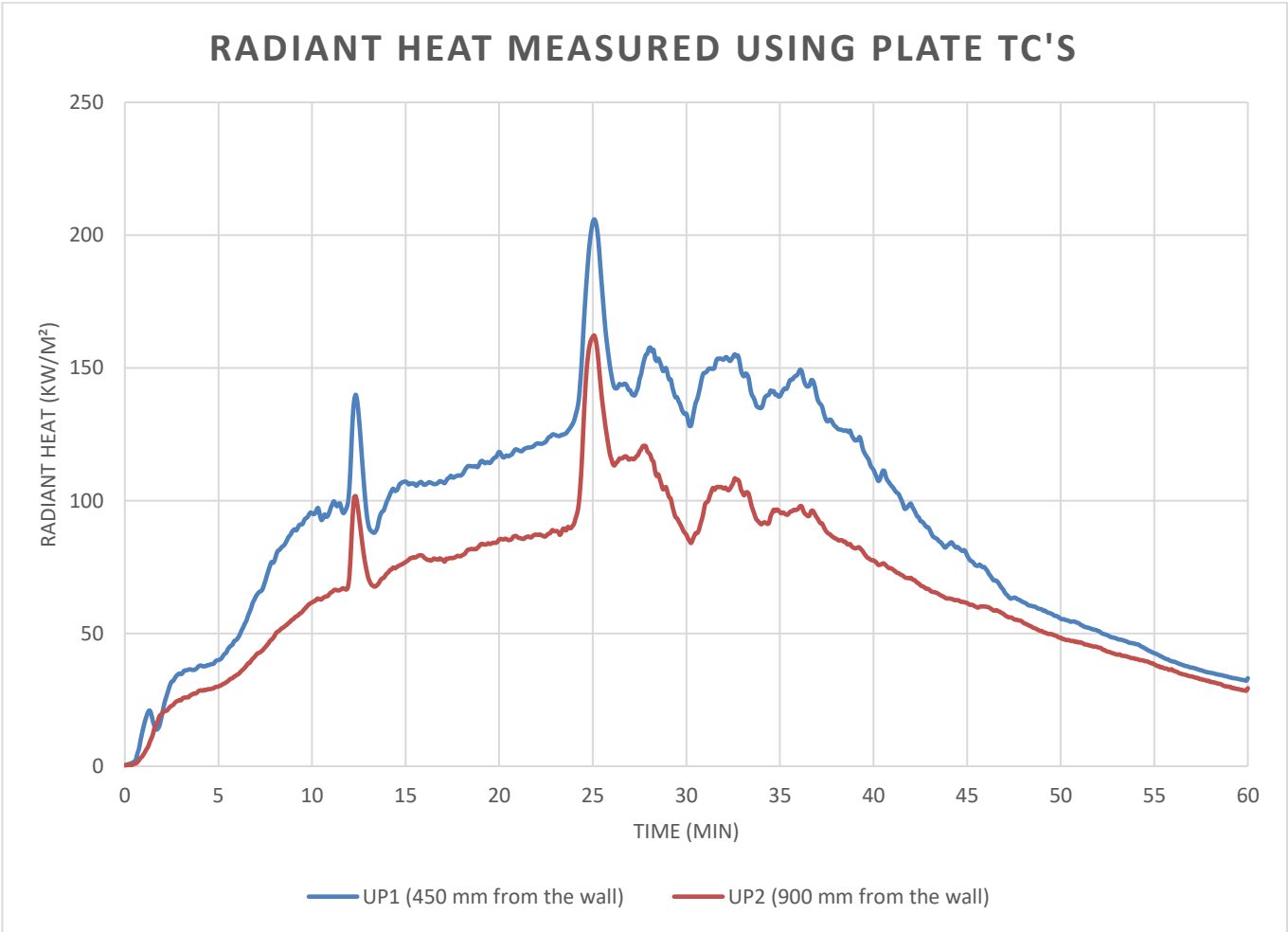

Data measurement from the steel C-section underneath 2nd floor

Layout

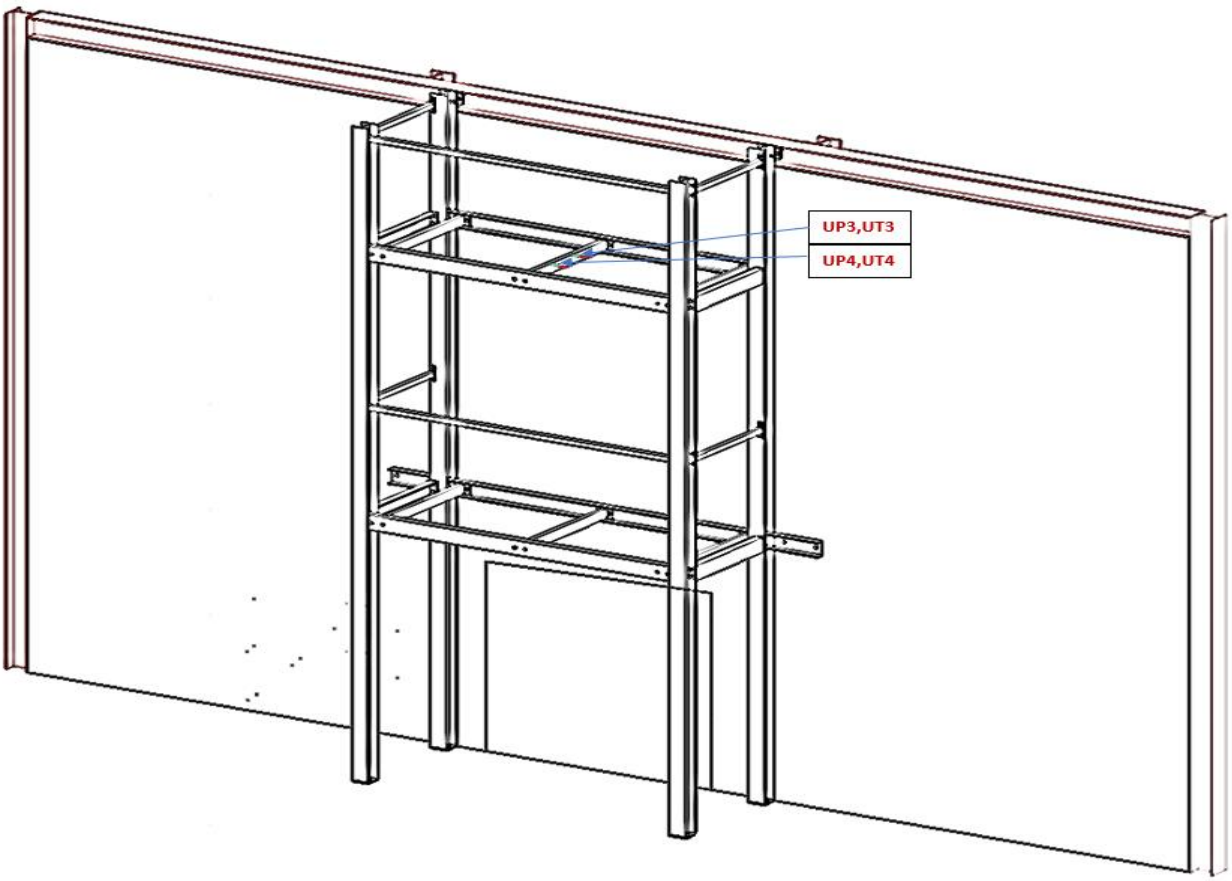

Temperature measured from the Plate TC's on the steel C-section underneath 2nd floor

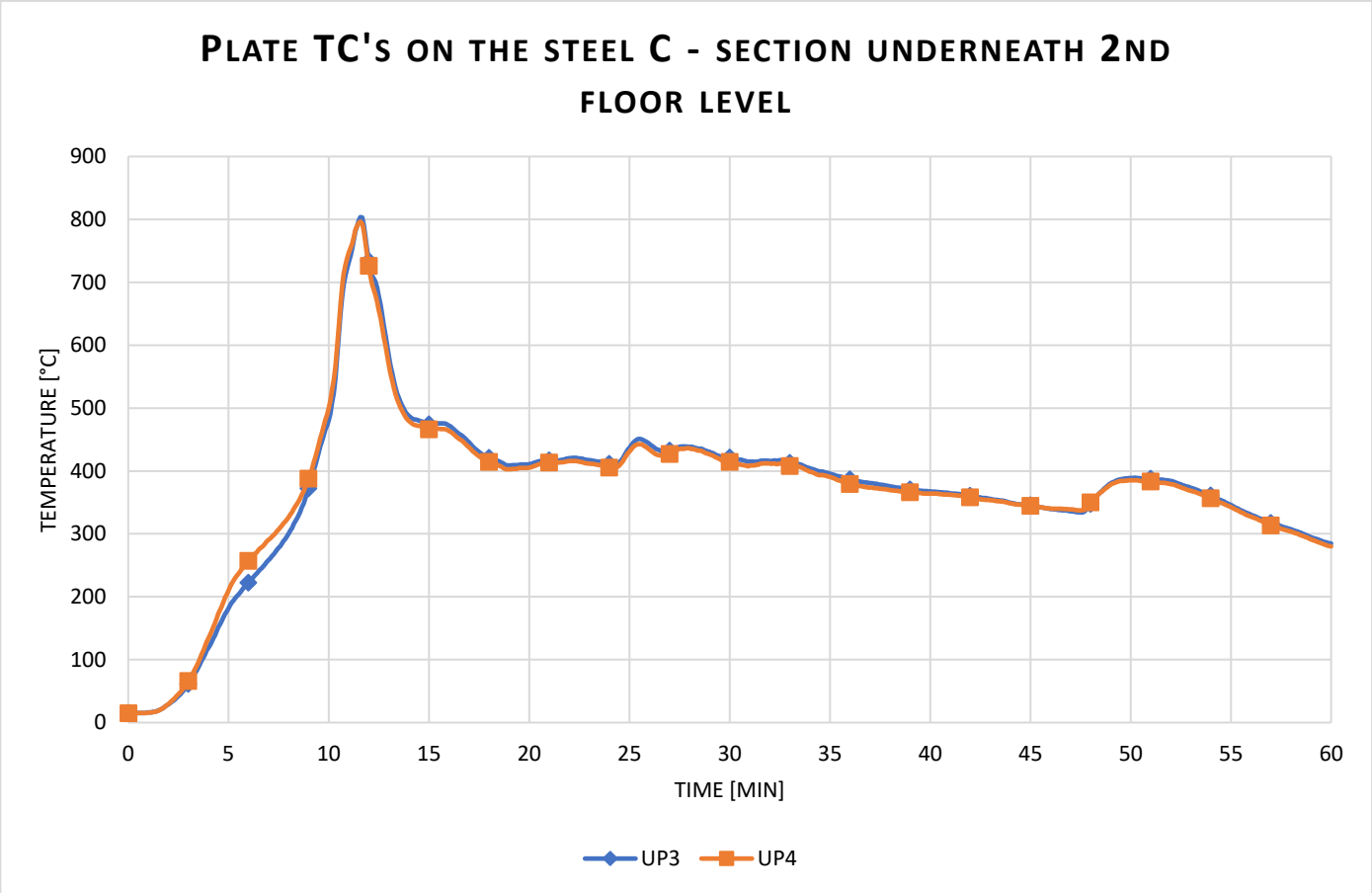

Temperature measured from the Inconels on the steel C-section underneath 2nd floor

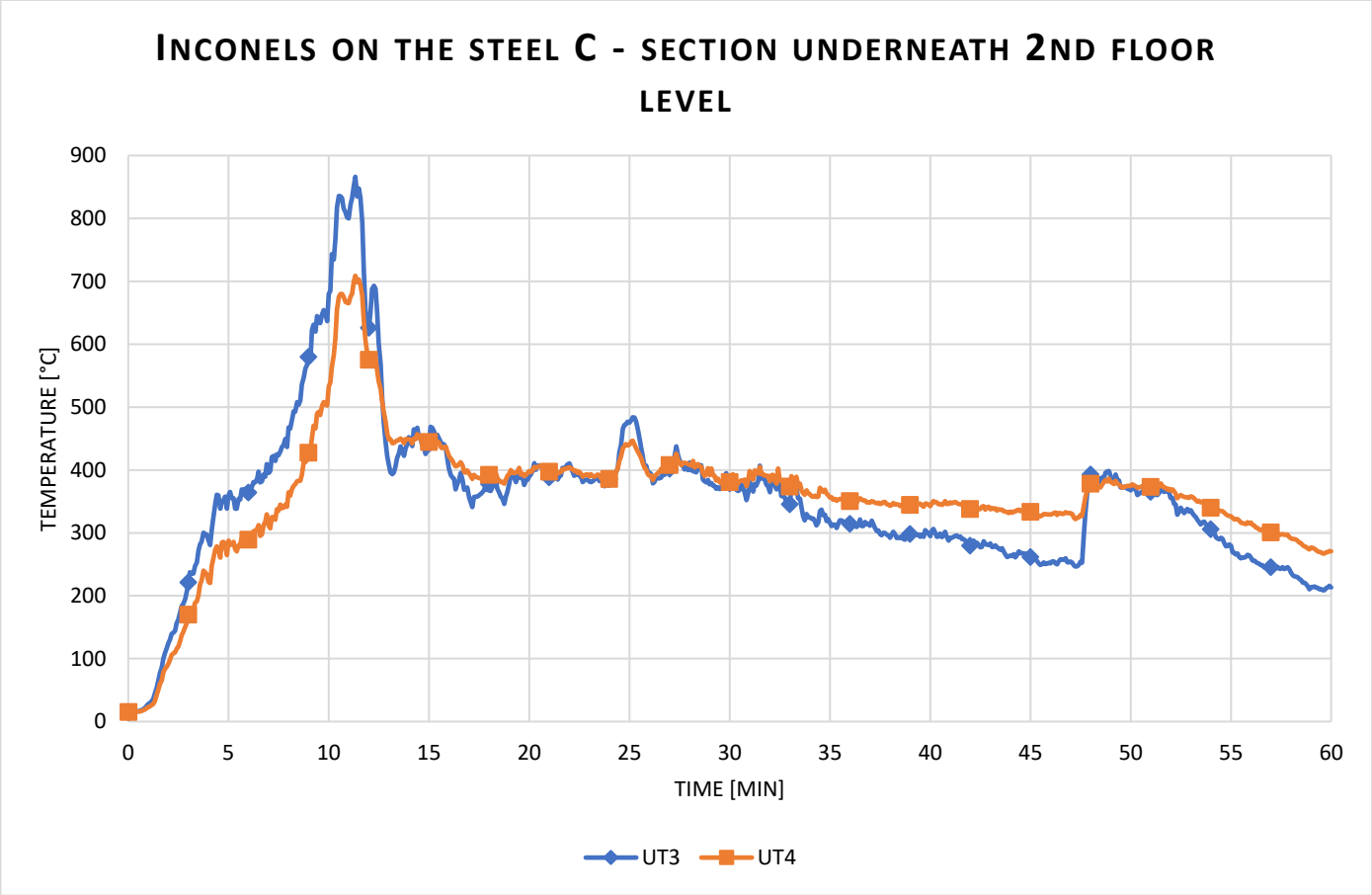

Radiant heat calculated from Plate TC's

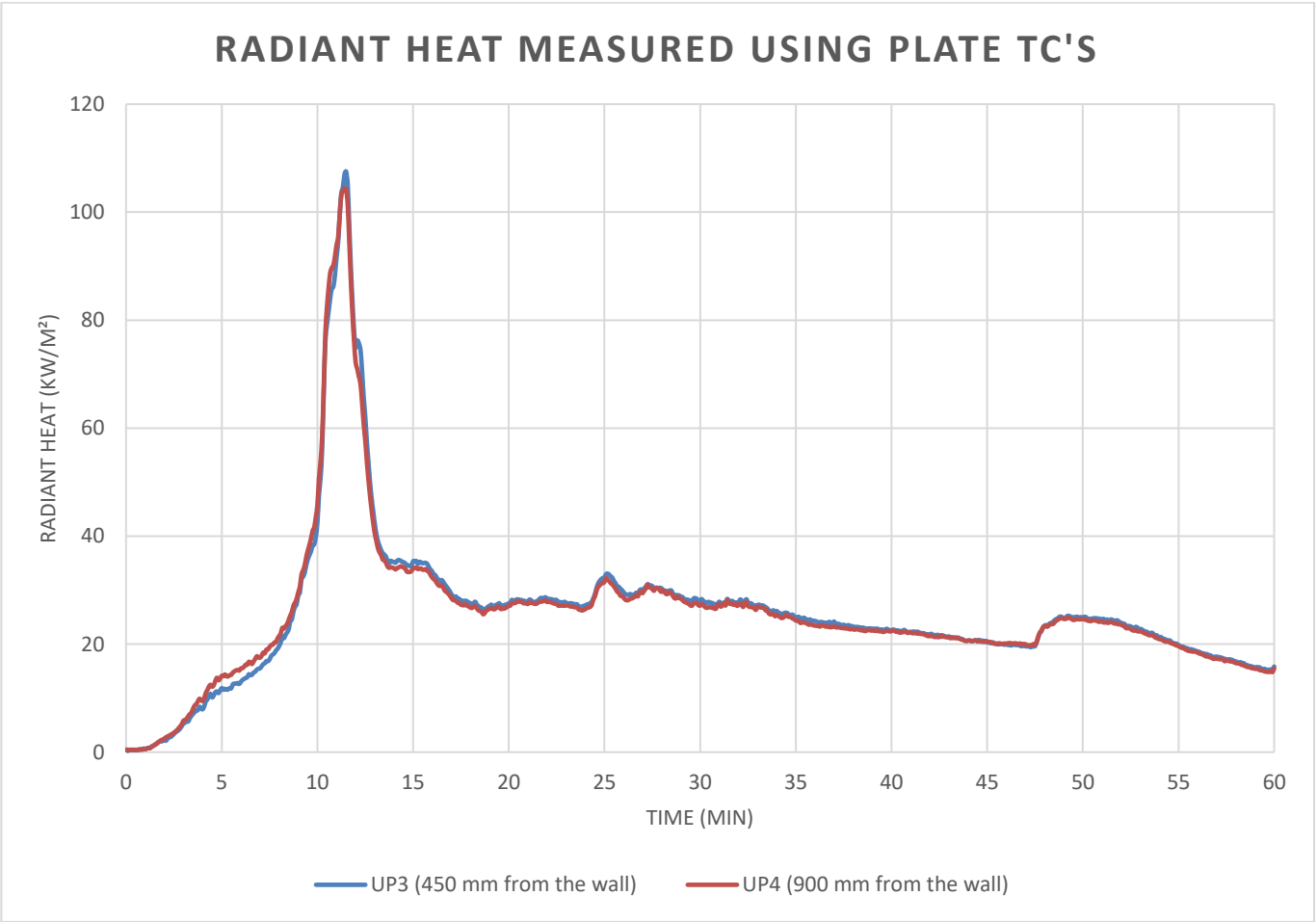

Data measurements from Inconels on side wall

Layout

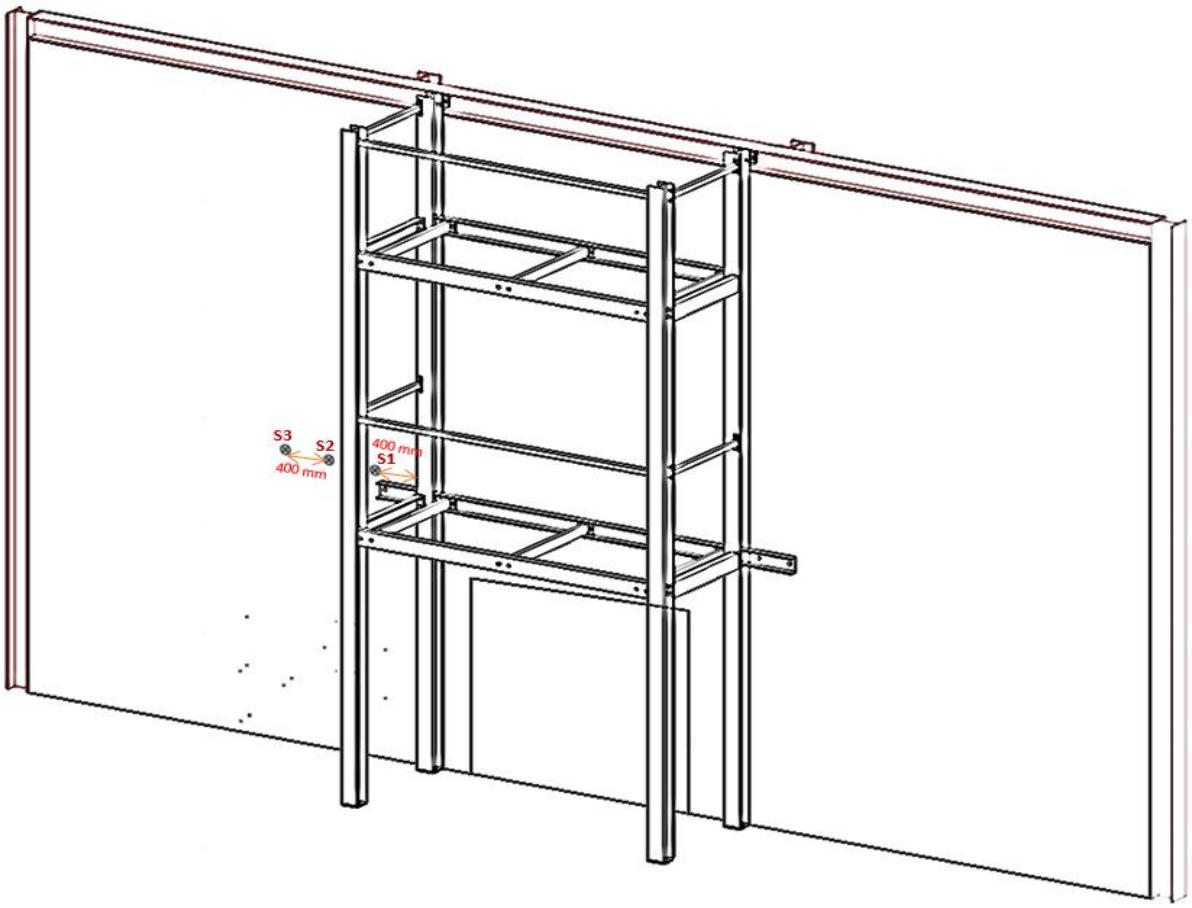

Temperature measured from the Inconels from the side wall – adjacent 1st floor level steel frame

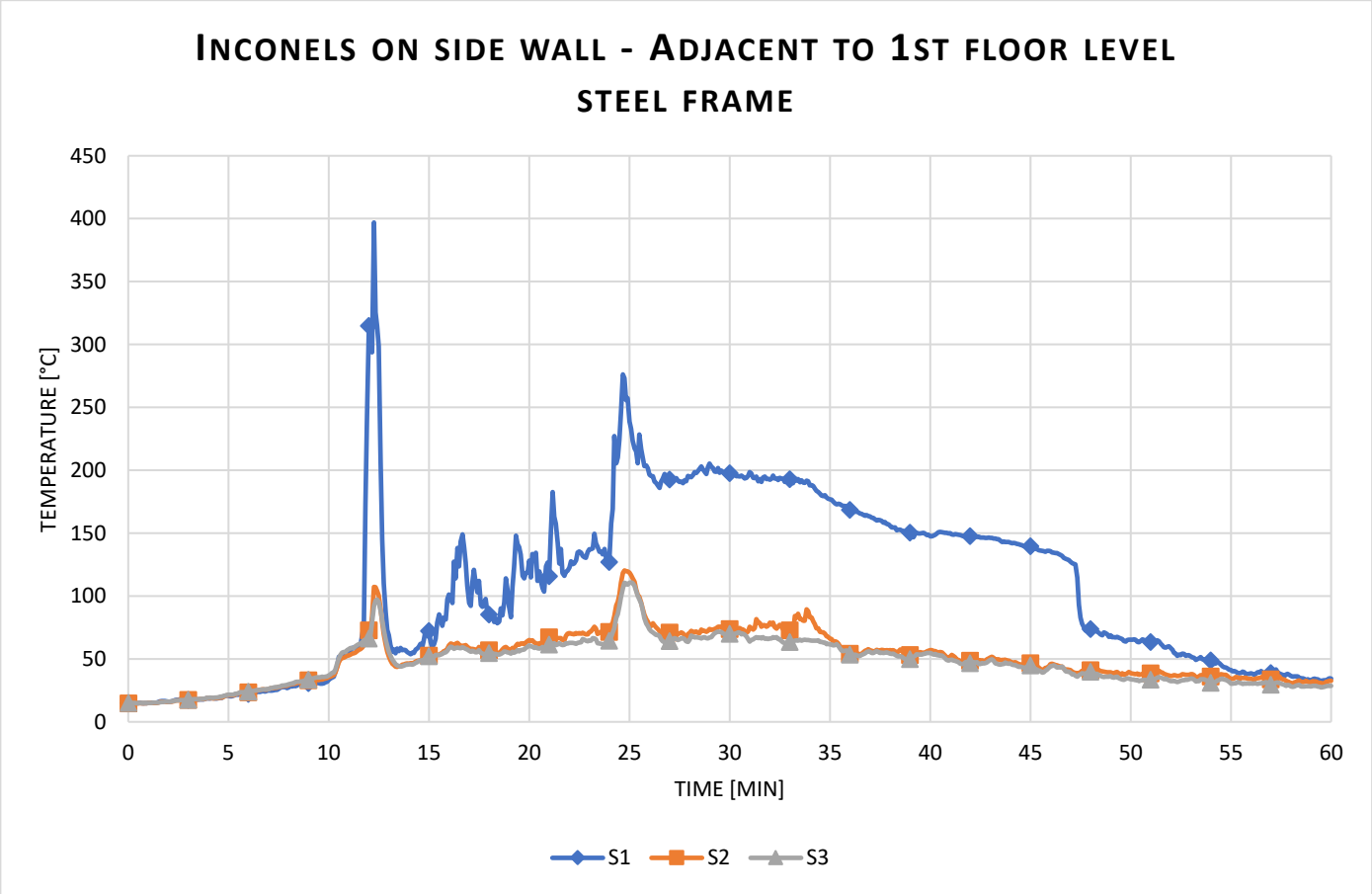

Data measurement from the Inconels on steel C - section

Layout

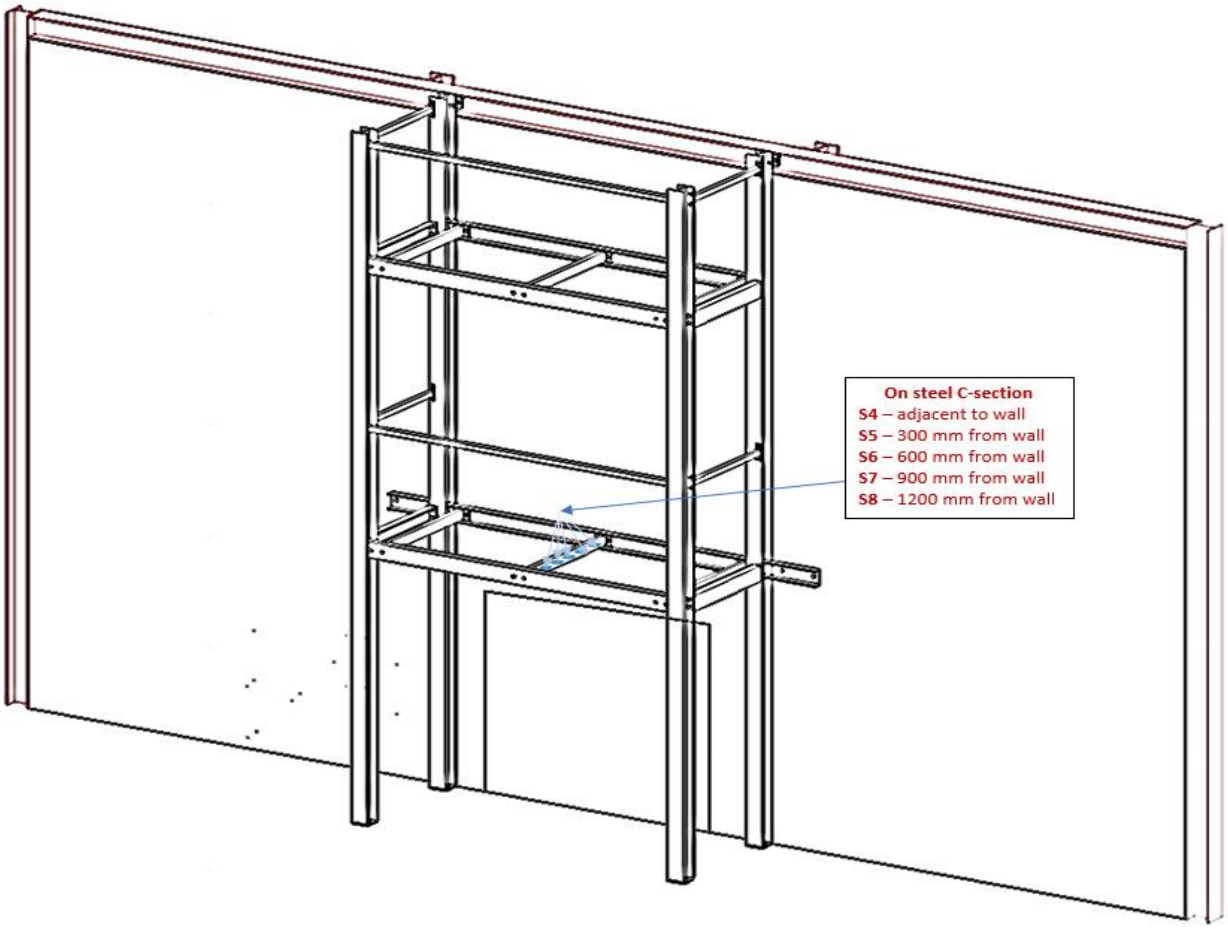

Temperature measured from the Inconels on steel C-section underneath 1st floor

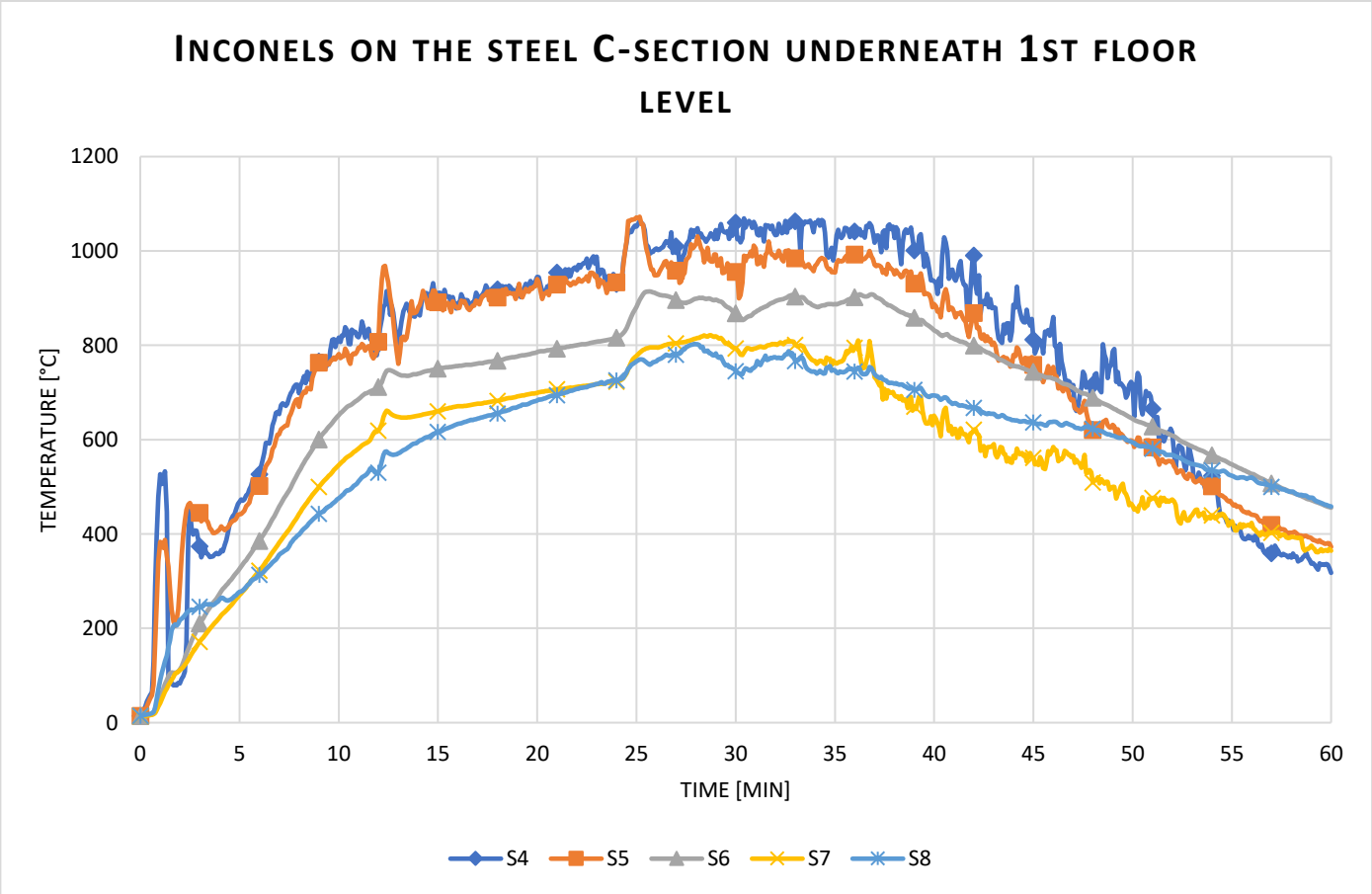

Data measurement from the Inconels facing crib (ground floor)

Layout

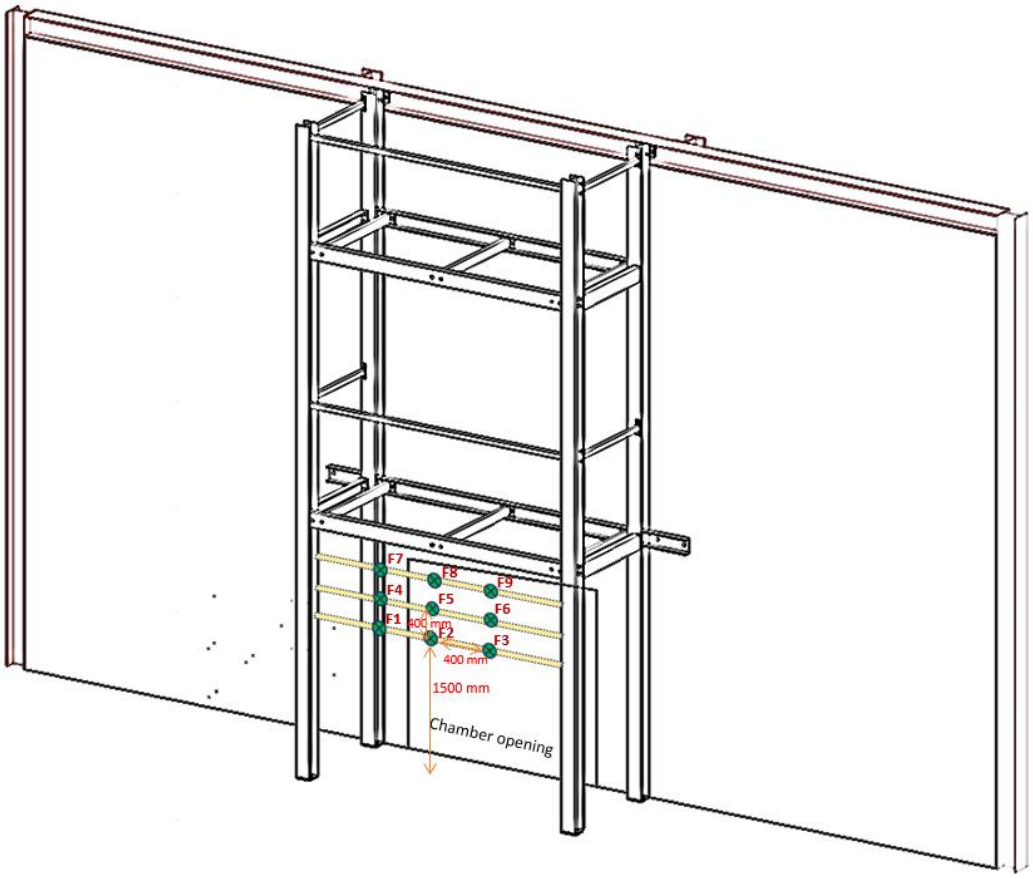

Temperature measured from the Inconels above the handrails facing the crib

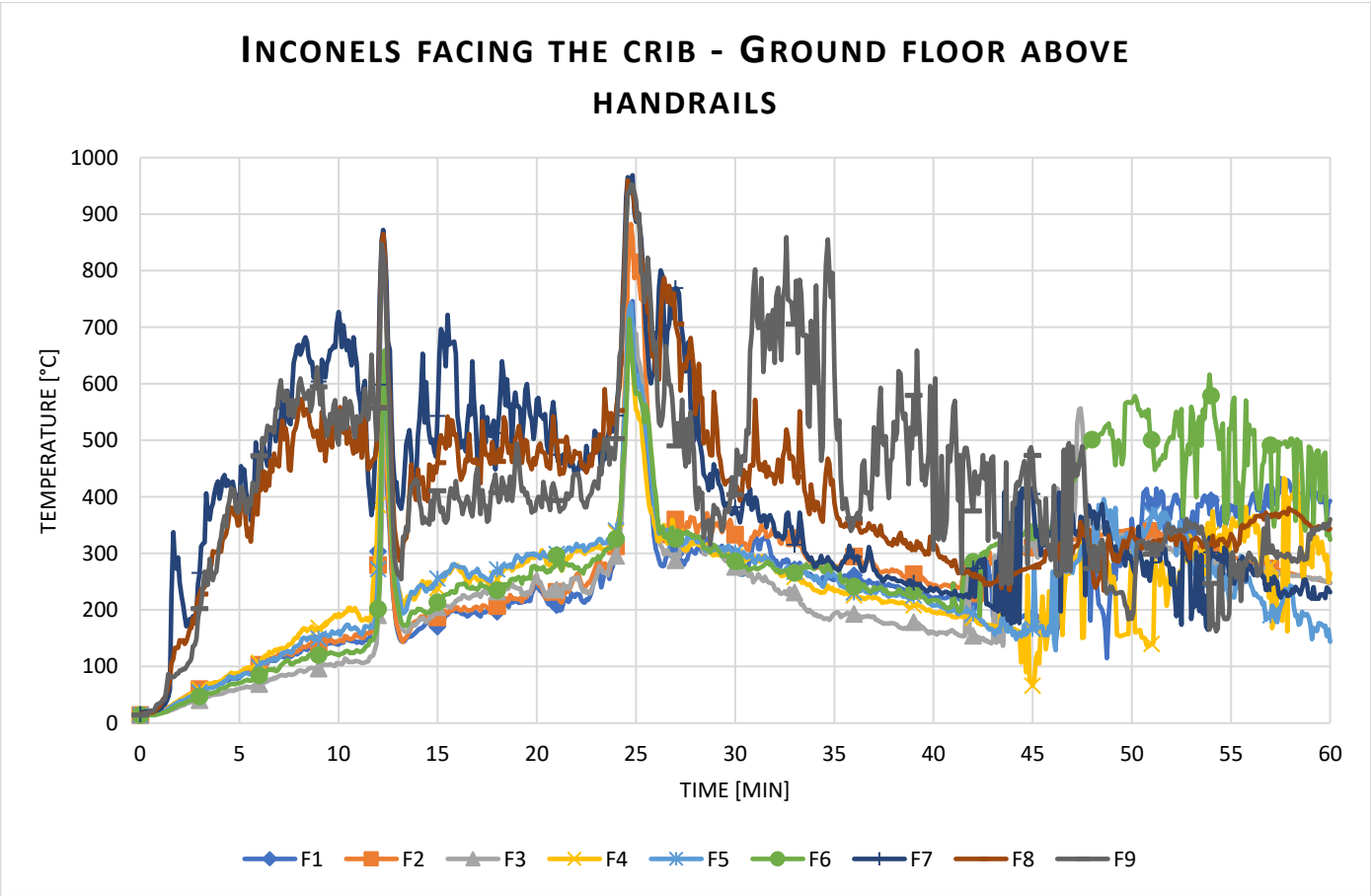

Data measurement from the Inconels on 1st floor

Layout

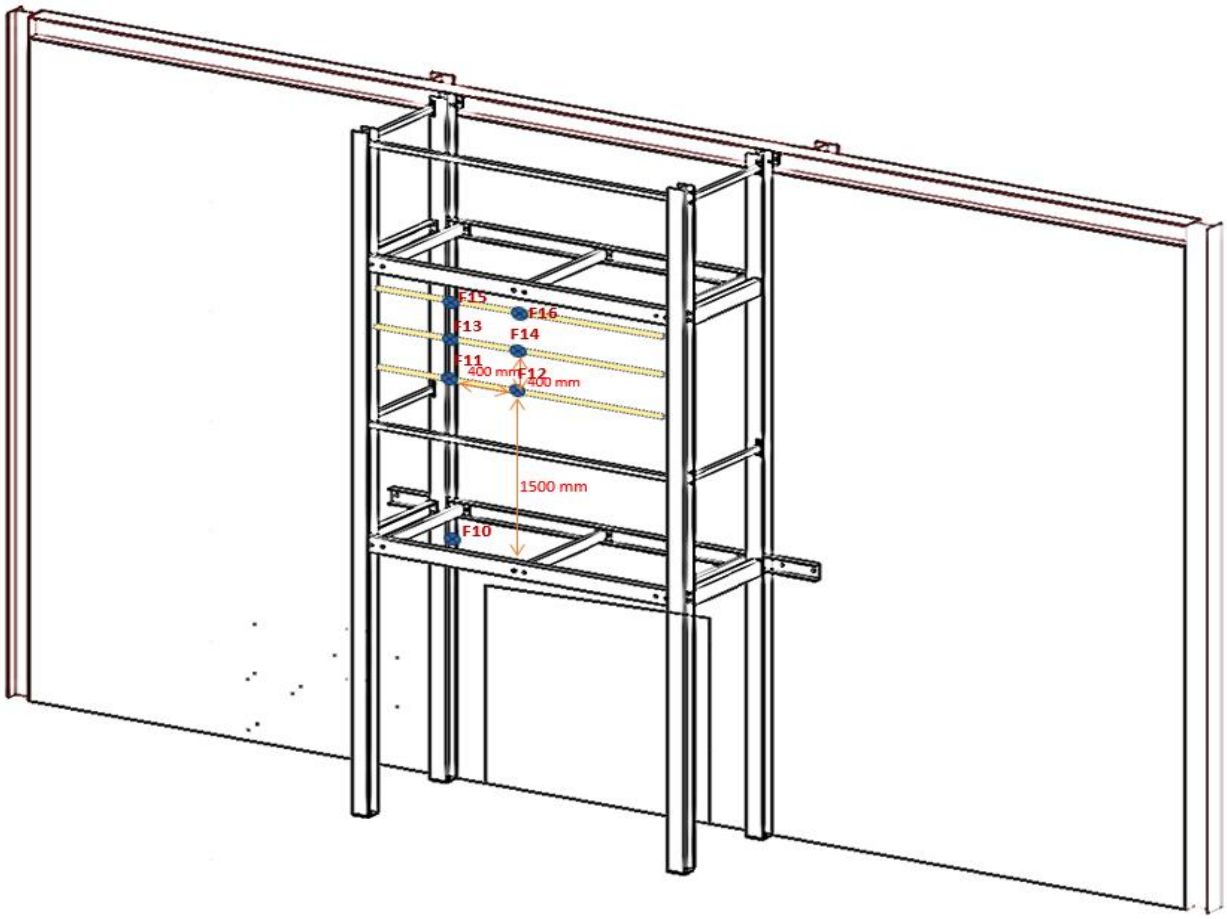

Temperature measured from the Inconels facing outwards on 1st floor on floor and above handrails

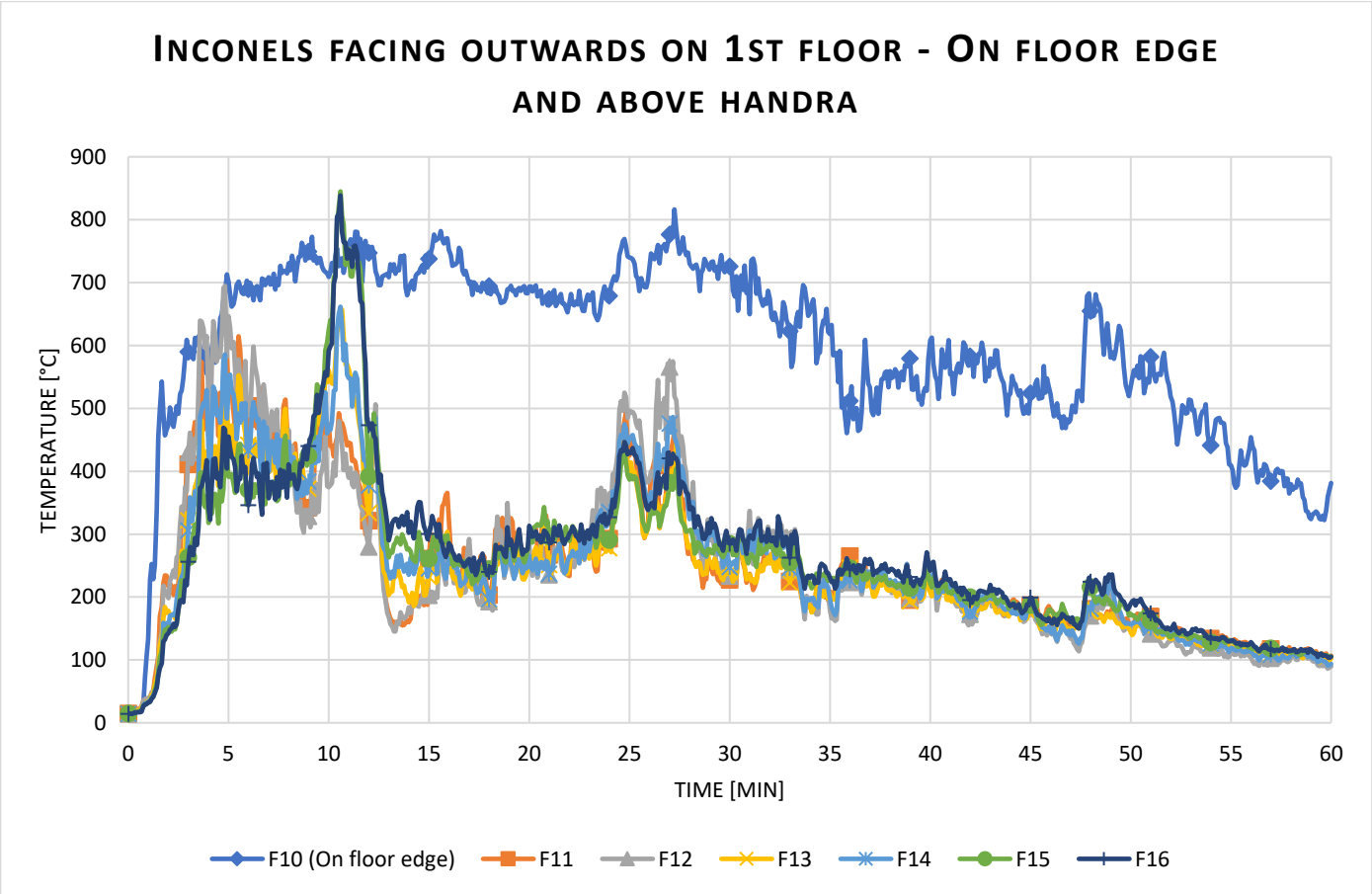

Data measurement from the Inconels on 2nd floor

Layout

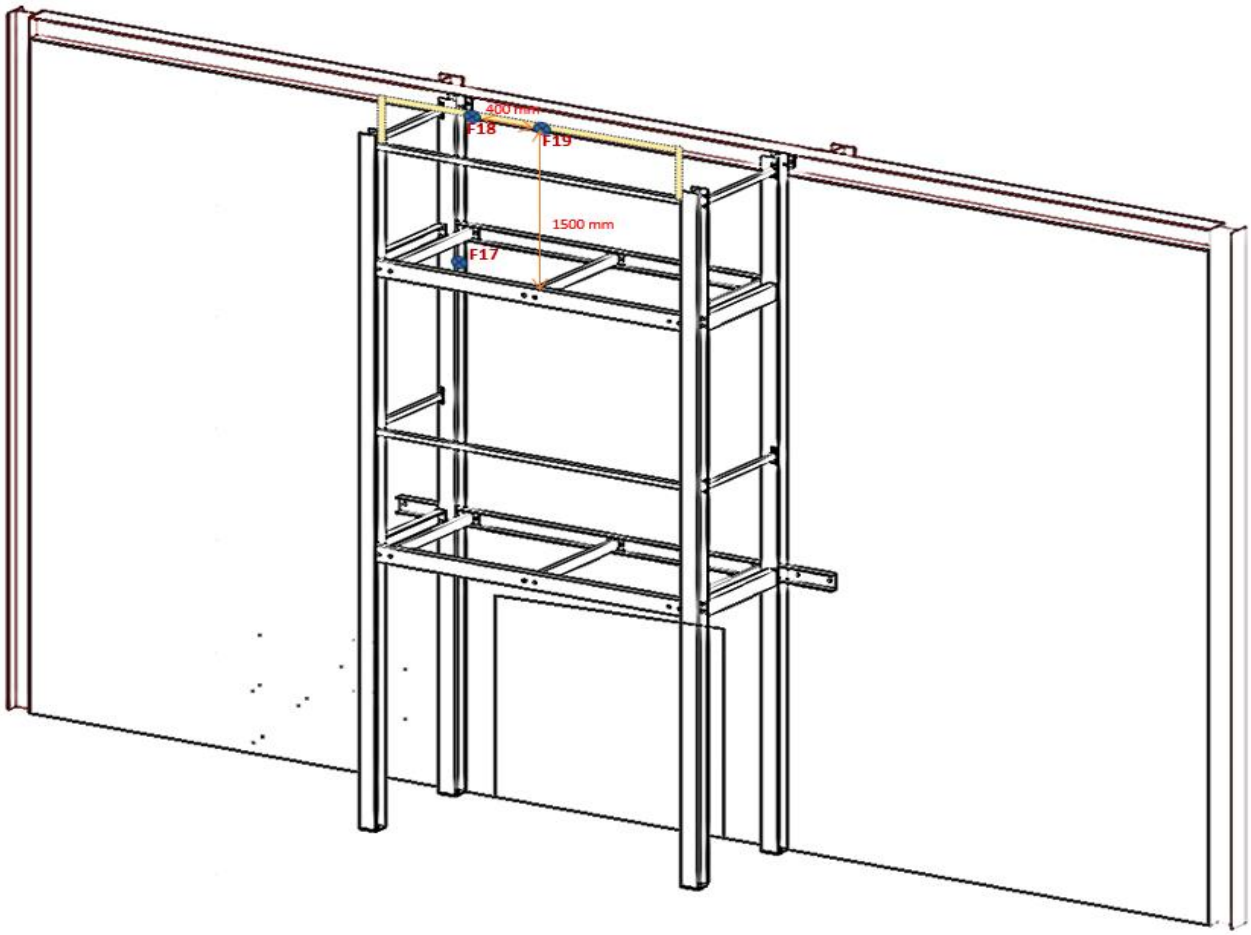

Temperature measured from the Inconels facing outwards on 2nd floor on floor and above handrails

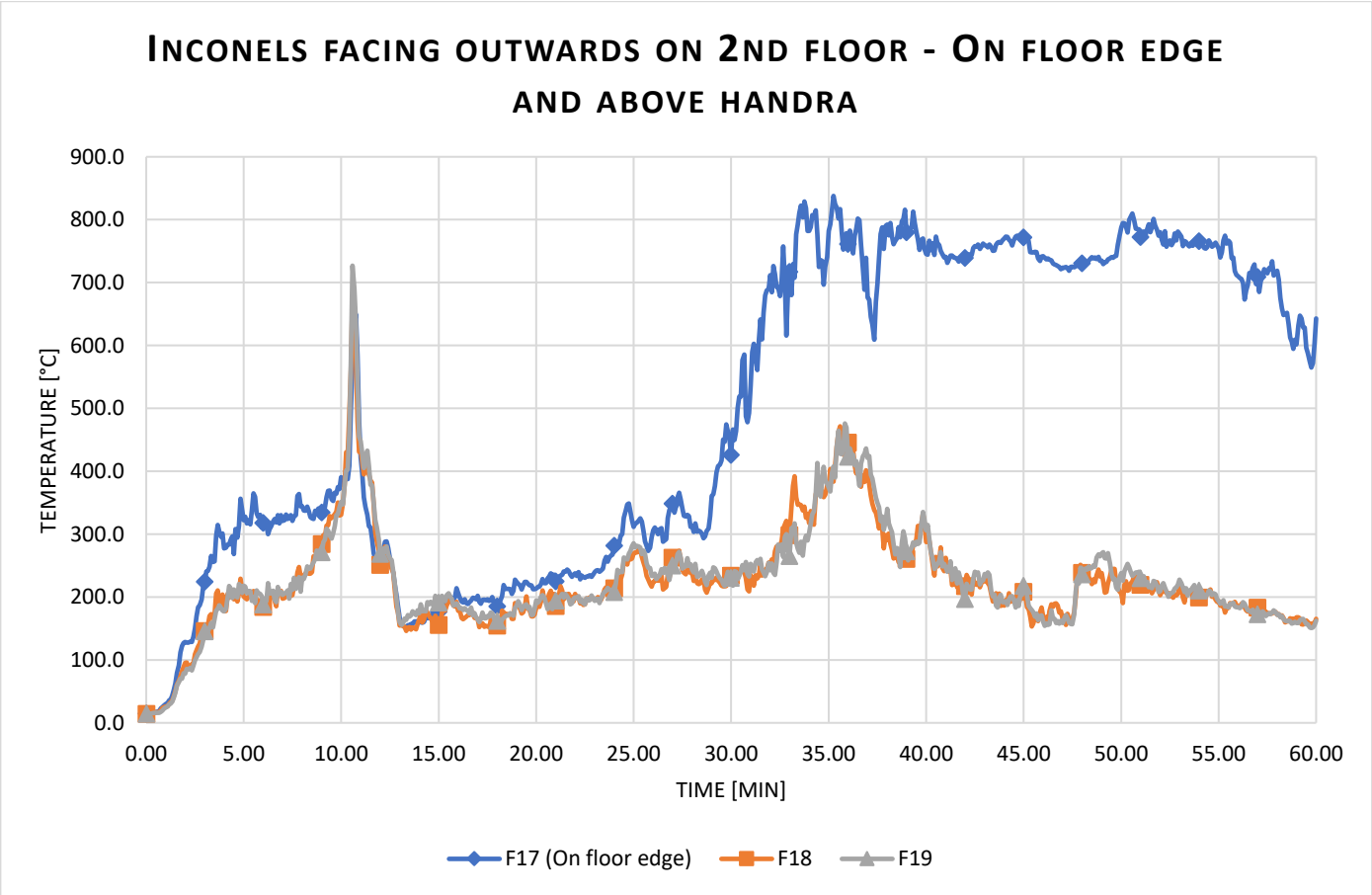

4. PICTURES TAKEN DURING THE TEST

03:24

0:00:58

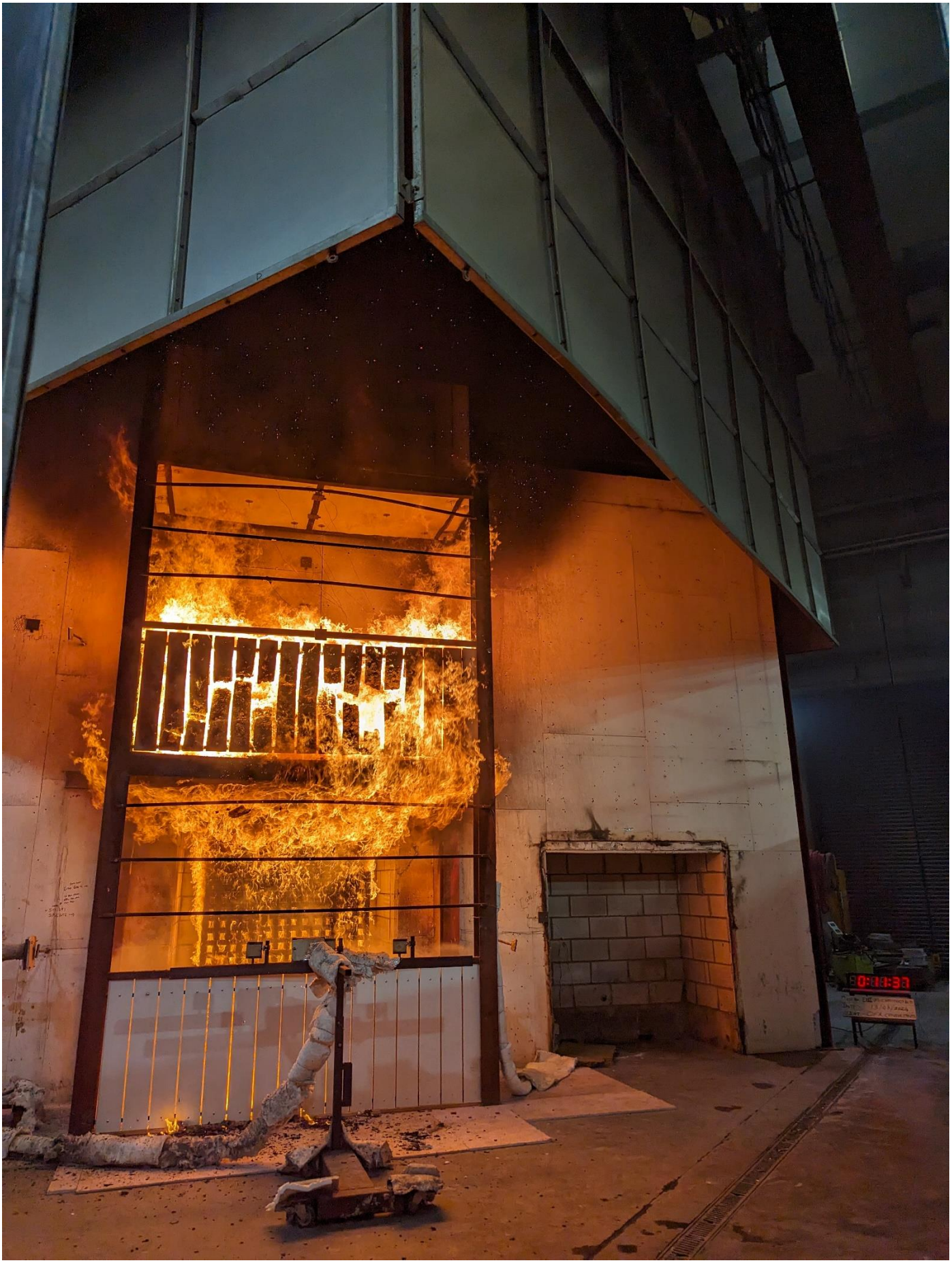

0:24:30

0:30:22

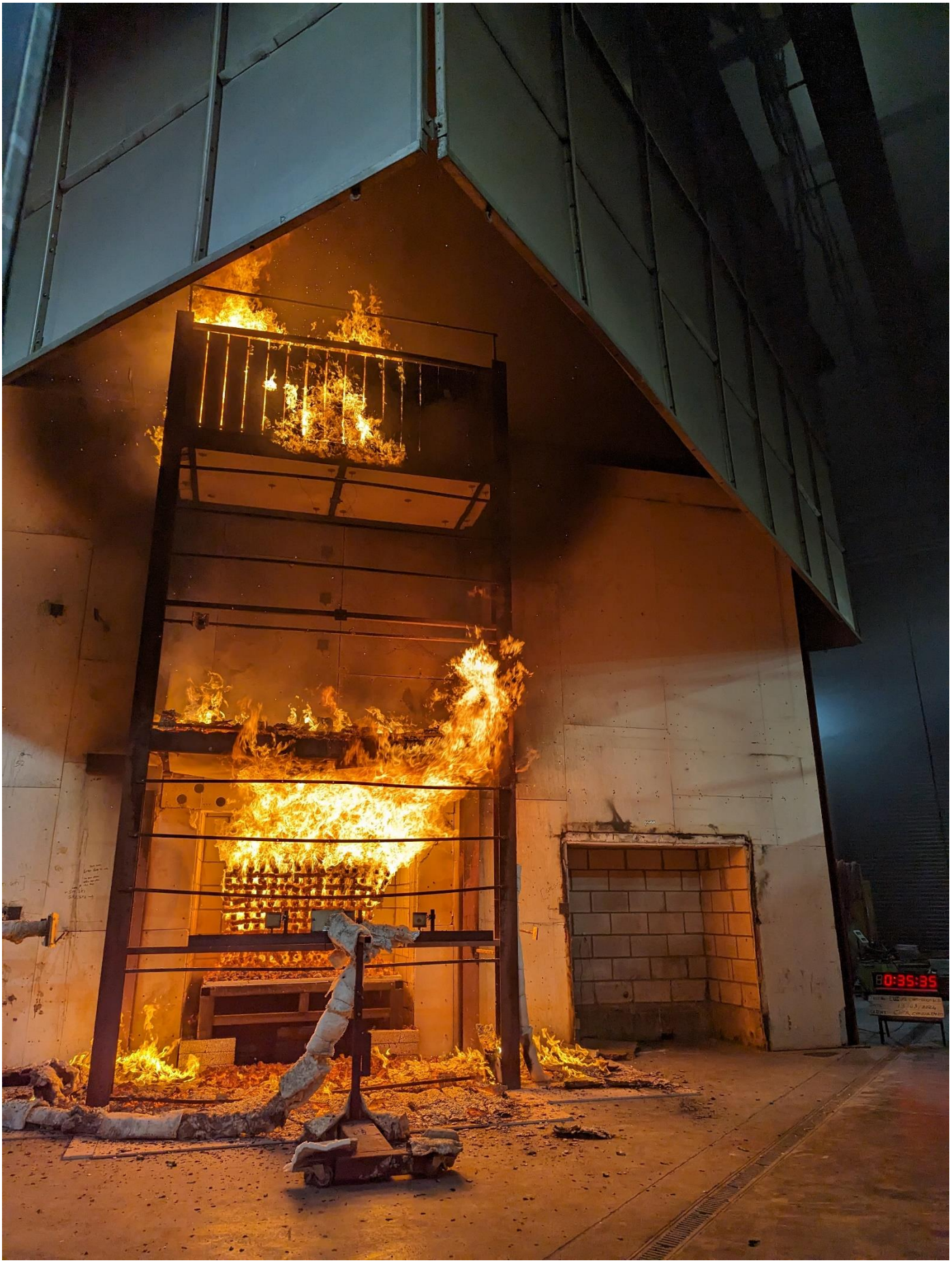
0:35:35

0:49:24

0:54:03

END OF THE TEST

APPENDIX C5:
Preliminary modelling of the full-scale balcony fire tests using FDS

Authors: N Hassan[1], M Spearpoint[1], A Basford[1]

[1]OFR

Contents

Contents i
Figures ii
Tables iii
C5-1. Introduction 1
C5-2. Modelling methodology 2
C5-2.1 Modelling tool 2
C5-2.2 Domain setup 2
C5-2.3 Mesh configuration 2
C5-2.4 Fire properties 3
C5-2.5 Modelling geometry 5
C5-2.6 Surface properties 8
C5-2.7 Instrumentation and measuring locations 8
C5-2.8 Radiation input parameters 10
C5-2.9 Simulation time 11
C5-3. Results and discussion 12
C5-3.1 Flame dynamics 12
C5-3.2 Heat release rate 15
C5-3.3 Temperatures and heat flux 16
C5-3.3.1 Facing the mid-height of the wood crib 16
C5-3.3.2 Side wall on ground floor 17
C5-3.3.3 Underneath Balcony 1 19
C5-3.3.4 Thermocouples facing the wood crib on ground floor 21
C5-3.3.5 Wall adjacent to the steel frame at Balcony 1 22
C5-3.3.6 Side wall at Balcony 1 railing level 24
C5-3.3.7 Balcony 1 handrail 26
C5-3.3.8 Wall behind Balcony 1 27
C5-3.3.9 Exposed edge of Balcony 1 floor 29
C5-3.3.10 Underneath Balcony 2 floor 31
C5-3.3.11 Side wall at Balcony 2 railing level 33
C5-3.3.12 Balcony 2 handrail 34
C5-3.3.13 Wall behind Balcony 2 level 36
C5-3.3.14 Exposed edge of Balcony 2 38
C5-3.4 Summary 40

C5-4. Conclusions and future work 41
C5-5. References 42

Figures

Figure C5-1 Initial wood crib configuration with four burning surfaces after 20 min compared with Test A 4
Figure C5-2 The combustion chamber and position of crib based on BS 8414 6
Figure C5-3 Primary balcony rig dimensions with steel frame elements identified 7
Figure C5-4 Instrumentation plan for the balcony test 9
Figure C5-5 Representation of measuring devices and locations for the balcony test. The red zone on the crib indicates the assumed burning region 10
Figure C5-6 Overall comparison of heat release rate measurements 15
Figure C5-7 Measurement devices facing the mid-height of the wood crib 16
Figure C5-8 Temperature of the TCs facing the mid-height of the wood crib 16
Figure C5-9 Radiant heat flux facing the mid-height of the wood crib 17
Figure C5-10 Measurement devices on the side wall on ground floor 18
Figure C5-11 Temperature of the TCs on the side wall on ground floor 18
Figure C5-12 Radiant heat flux on the side wall on ground floor 18
Figure C5-13 Measurement devices underneath Balcony 1 19
Figure C5-14 Temperature of the TC underneath Balcony 1 20
Figure C5-15 Radiant heat flux underneath Balcony 1 20
Figure C5-16 Measurement devices facing the crib on ground floor 21
Figure C5-17 Temperature of the lower TCs facing the wood crib on ground floor 21
Figure C5-18 Temperature of the middle TCs facing the wood crib on ground floor 22
Figure C5-19 Temperature of the upper TCs facing the wood crib on ground floor 22
Figure C5-20 Measurement devices on the side wall adjacent to the steel frame 23
Figure C5-21 Temperature of TCs on the side wall adjacent to the steel frame at the at Balcony 1 floor level 23
Figure C5-22 Measurement devices on the side wall at Balcony 1 railing level 24
Figure C5-23 Temperature of the TC on the side wall at Balcony 1 railing level 25
Figure C5-24 Radiant heat flux on the side wall at Balcony 1 railing level 25
Figure C5-25 Measurement devices at the handrail on first floor 26
Figure C5-26 Temperature of the TC at the handrail on first floor 26
Figure C5-27 Radiant heat flux at the handrail on first floor 27
Figure C5-28 Measurement devices on the facade wall behind Balcony 1 28
Figure C5-29 Temperature of the TC on the facade wall behind Balcony 1 28
Figure C5-30 Radiant heat flux on the facade wall behind Balcony 1 29

Figure C5-31 Measurement devices at the exposed edge of Balcony 1 30
Figure C5-32 Temperature of the TC at the exposed edge of Balcony 1 30
Figure C5-33 Radiant heat flux at the exposed edge of Balcony 1 31
Figure C5-34 Measurement devices underneath the second-floor balcony 32
Figure C5-35 Temperature of the TC underneath Balcony 2 32
Figure C5-36 Radiant heat flux underneath Balcony 2 32
Figure C5-37 Measurement devices on the side wall on second floor 33
Figure C5-38 Temperature of the side wall TC at Balcony 2 railing level 34
Figure C5-39 Radiant heat flux on the side wall at Balcony 2 railing level 34
Figure C5-40 Measurement devices at Balcony 2 handrail 35
Figure C5-41 Temperature of the TC at Balcony 2 handrail 35
Figure C5-42 Radiant heat flux at Balcony 2 handrail 36
Figure C5-43 Measurement devices on the facade wall behind Balcony 2 37
Figure C5-44 Temperature of the TC on the facade wall behind Balcony 2 37
Figure C5-45 Radiant heat flux on the facade wall behind Balcony 2 38
Figure C5-46 Measurement devices at the exposed edge of Balcony 2 38
Figure C5-47 Temperature of the TC at the exposed edge of Balcony 2 39
Figure C5-48 Radiant heat flux at the exposed edge of Balcony 2 39

Tables

Table C5-1 Summary of design fire properties 5
Table C5-2 Geometry surface properties 8
Table C5-3 Flame characteristics in Test A vs. FDS simulation over time 12

C5-1. Introduction

This report forms part of a broader project to examine the potential fire safety impacts of the use of balconies, spandrels and laminated glass in buildings. This project provides evidence to the Building Safety Regulator (BSR) within the Health and Safety Executive (HSE) on which to consider any potential future technical changes to Approved Document B (AD B) and Regulation 7 in support of the Building Regulations in England.

As part of the project, an attempt has been made to benchmark the capability of Fire Dynamics Simulator (FDS) to predict fire behaviour in balcony fire scenarios. This report specifically focuses on a comparison of FDS simulation results against the measurements obtained from the full-scale balcony fire demonstration tests that have been carried out in **Objective C4**.

The main aim of this work is to assess whether the FDS computational fire dynamics (CFD) model can reliably replicate the thermal conditions observed in the full-scale tests. This assessment process involves:

- Simulating the same balcony fire conditions in FDS,
- Comparing key outputs such as gas temperatures and radiant heat flux between the FDS simulations and the test data, and
- Consider how refining the simulation parameters might improve the agreement between the FDS predictions and test results.

The current work focuses on Test A as detailed in **Objective C4**, which served as the baseline scenario with non-combustible balcony floors, open balustrades, and no additional fuel targets. This test was designed to characterise heat fluxes and other fire-related parameters under a simple configuration. The successful benchmarking of FDS against Test A is important as it will serve as the foundation for any future work on a comparison with the more complex scenarios undertaken in **Objective C4**. On the basis that FDS can adequately represent the thermal conditions for Test A, the benchmarking process can extend to the other seven tests to assess FDS's performance under varied balcony designs and fuel load conditions.

The results from this study will help to assess the reliability of FDS as a tool for predicting fire spread between balconies and provide evidence for its use in future fire safety design and analysis. Through this work, the eventual aim is to demonstrate that FDS could be used to simulate storey-to-storey fire spread in balcony configurations.

C5-2. Modelling methodology

C5-2.1 Modelling tool

The fire and smoke modelling for the assessment presented herein has been undertaken by using Fire Dynamics Simulator (FDS) version 6.9.1 [2]. FDS is an open-source CFD modelling package developed by the National Institute of Standards and Technology (NIST) specifically for use in fire and smoke modelling applications. FDS solves an incompressible form of the Navier-Stokes equations, by default using the very large eddy simulation (VLES) turbulence model. The equations are solved on structured cartesian grids.

C5-2.2 Domain setup

The domain used for the FDS model was defined to replicate the test setup as closely as necessary. The overall domain size is built to be 6.1 m in length, 6.6 m in height, and 3.6 m in width. These dimensions ensure that the entire scenario, including the fire source, balconies, measurement sensors and surrounding areas, is appropriately captured in the simulation. The domain boundaries have been set up to allow for the simulation of the thermal conditions without considering external environmental factors, such as:

- The ambient temperature has been assumed to be 20 °C to represent standard environmental conditions in the absence of external heat sources. This was slightly higher than the average temperature of around 16 °C at the start of Test A.
- Relative humidity has not been explicitly included in the FDS model, as it is assumed to have an insignificant effect on the outcomes of this particular fire scenario.
- Since the tests were carried out within an enclosed laboratory environment the simulation assumes no external airflow, meaning that the domain is treated as a controlled, still environment without wind or forced ventilation that could influence the fire spread.

Furthermore, the full lateral extent of the wall is not represented, and the oxygen consumption calorimetry hood is omitted, ensuring the focus remains on vertical fire development through balconies. This configuration allows the domain to represent the critical aspects of the fire behaviour within the test parameters while simplifying less impactful environmental variables.

C5-2.3 Mesh configuration

The mesh size (δx) used for the fire can be compared to the characteristic fire diameter (D*) and plume resolution index (D*/δx). Research document NUREG-1824 [3] included

a series of sensitivity analyses carried out for FDS where suitable D*/δx values typically ranged from 4 to 16, with the upper bound representing practical computational limits. These values were deemed in the examples to adequately resolve plume dynamics, along with other geometrical characteristics.

For this assessment, the modelling adopts a uniform mesh cell size (δx) of 0.05 m in critical areas such as the fire origin and measurement areas. This refined mesh resulted in a D*/δx ratio of approximately 35, exceeding the recommended NUREG-1824 range of 4 to 16. However, this mesh size is necessary for the modelling to achieve a high level of detail in critical areas in an attempt to capture detailed fire dynamic and heat transfer behaviours.

For the regions that are not directly influenced by the fire and situated further from the expected flame height, a mesh size of 0.1 m has been used. This strategic approach balances computational efficiency with precision, ensuring that important areas are modelled with sufficient detail while avoiding excessive computational costs.

C5-2.4 Fire properties

Table C5-1 provides a summary of the fire properties used as part of the modelling process. The simulations in this study utilised the FDS 'burner' capability, specifying the heat release rate (HRR) directly from the test measurements rather than replicating the combustion behaviour of each individual wood stick in the crib, as done in some other research work such as Dai et al. [4], and Janardhan and Hostikka [5]. This approach simplifies the modelling process while ensuring an appropriate representation of the overall fire dynamics observed during the tests.

The design fire properties have been determined to replicate the test setup and the appropriate elements of the BS 8414 standards. The crib is represented as a rectangular cuboid element with dimensions following to BS 8414 [6] specification. In an initial assessment, several preliminary sensitivity cases were conducted to determine the most appropriate configuration for the burning surfaces of the wood crib. These cases included the top surface, the front surface, both top and front surfaces, and a configuration with four burning surfaces (excluding the rear and bottom) as shown in Figure C5-1. The rear surface was omitted under the assumption that limited space at the back of the combustion would restrict airflow, reducing oxygen availability for combustion. Figure C5-1 also shows the extent of the flame development after 20 min in Test A and the inadequacy of the simulation with the four burning surface representation of the crib.

To better replicate the flame behaviour, which is primarily concentrated on the top and front portions of the wood crib, the model was adjusted to apply burning surfaces. This updated configuration includes approximately half of the top surface and about half of the front surface of the wood crib as shown in Figure C5-5, which appears to more accurately represent the flame length and other characteristics observed in the test setup as shown in Section C5-3.1.

Figure C5-1 Initial wood crib configuration with four burning surfaces after 20 min compared with Test A

The HRR curve data obtained from the balcony fire Test A. Based on the measurements, a HRR of 4,113 kW derived from the mean peak value has been adopted as the maximum HRR for the simulation. The heat release rate per unit area (HRRPUA) of the wood crib was calculated to be 2,493 kW/m^2, considering the total area of the two exposed burning surfaces on the fuel package: half of the top surface (1.5 m in length by 0.5 m in width) and slightly more than half of the front surface (1.5 m in length by 0.6 m in height) of the wood crib, as shown in Figure C5-5. The HRR from each burner was specified to vary proportional to the area of each individual burner applied in the model. This approach ensures that energy release is concentrated on these two surfaces, aligning with the observed flame behaviour in the test.

The fire properties in the simulation are configured to achieve a realistic thermal response, with adjustments made to key parameters. Initially, default settings, such as a surface temperature of 300 °C, were trialled, but these produced lower temperatures and radiant heat flux than desired. To address this, several sensitivity cases were conducted on the input for the surface temperature. Through these sensitive tests, a surface temperature of 1000 °C was found to be adequate for achieving target conditions. Additionally, in early stages of the trials, no temperature ramp-up was applied, resulting in an unrealistically high spike in temperature and heat flux at the start of the simulation, particularly for the device located in close proximity to the fire source (wood crib). To mitigate this, a custom ramp-up time has been introduced, aligned with the ramp-up used in the heat release rate of the fire. This adjustment helped to create a more accurate and realistic progression of temperature and heat flux in the model.

A soot yield of 0.01 kg/kg and an effective heat of combustion of 18,100 kJ/kg.K were used in the modelling, as outlined in Janardhan and Hostikka's [5] study. The chemical composition of the wood crib was defined as $C_{3.4}H_{6.2}O_{2.5}$, as used by Janardhan and Hostikka [5].

Table C5-1 Summary of design fire properties

Parameter	Value	Remarks
Maximum heat release rate (HRR)	4,113 kW	The maximum HRR value is derived from the average peak HRR data obtained in Test A.
Heat release rate per unit area (HRRPUA)	2,493 kW/m^2	The HRRPUA was estimated based on the surface area of the wood crib, as shown in Figure C5-5.
Maximum fire area	1.65 m^2	The burner area is estimated based on a a rectangular box with half of the top surface (0.75 m^2) and about half of the front surface of the wood crib (0.90 m^2) The crib dimension is modelled to follow BS 8414 [6].
Soot yield	0.01 kg/kg	This value is consistent with the recommended soot yield as outlined in the paper by Janardhan and Hostikka [5], which provides a benchmark for modelling pyrolysis and combustion processes in wood crib fire scenarios.
Effective heat of combustion	18,100 kJ/kg.K	This value is derived from the study by Janardhan and Hostikka [5], highlighting the typical effective heat of combustion for wood cribs used in the fire simulations and modelling.
Radiative fraction	0.35	This is the recommended value extracted from the FDS user's guide [2] for 'all other species', and this value is also supported by Janardhan and Hostikka [5].
Growth rate	-	The growth rate is specifically designed to align with the HRR data obtained from Test A, to ensure that the fire development in the simulation accurately reflects the conditions measured during the test.

C5-2.5 Modelling geometry

The PyroSim tool has been used to create the geometrical input file for FDS. The geometry for the balcony fire simulation was designed to replicate the test setup as closely as possible. The focus was on the balcony structures and the requirements outlined in BS 8414. The combustion chamber, including the positioning of the fuel load (i.e. the wood crib), was carefully defined according to BS 8414 as shown in Figure C5-2. The side, front and plan view of the combustion chamber were constructed to represent the dimensions and layout of the test rig.

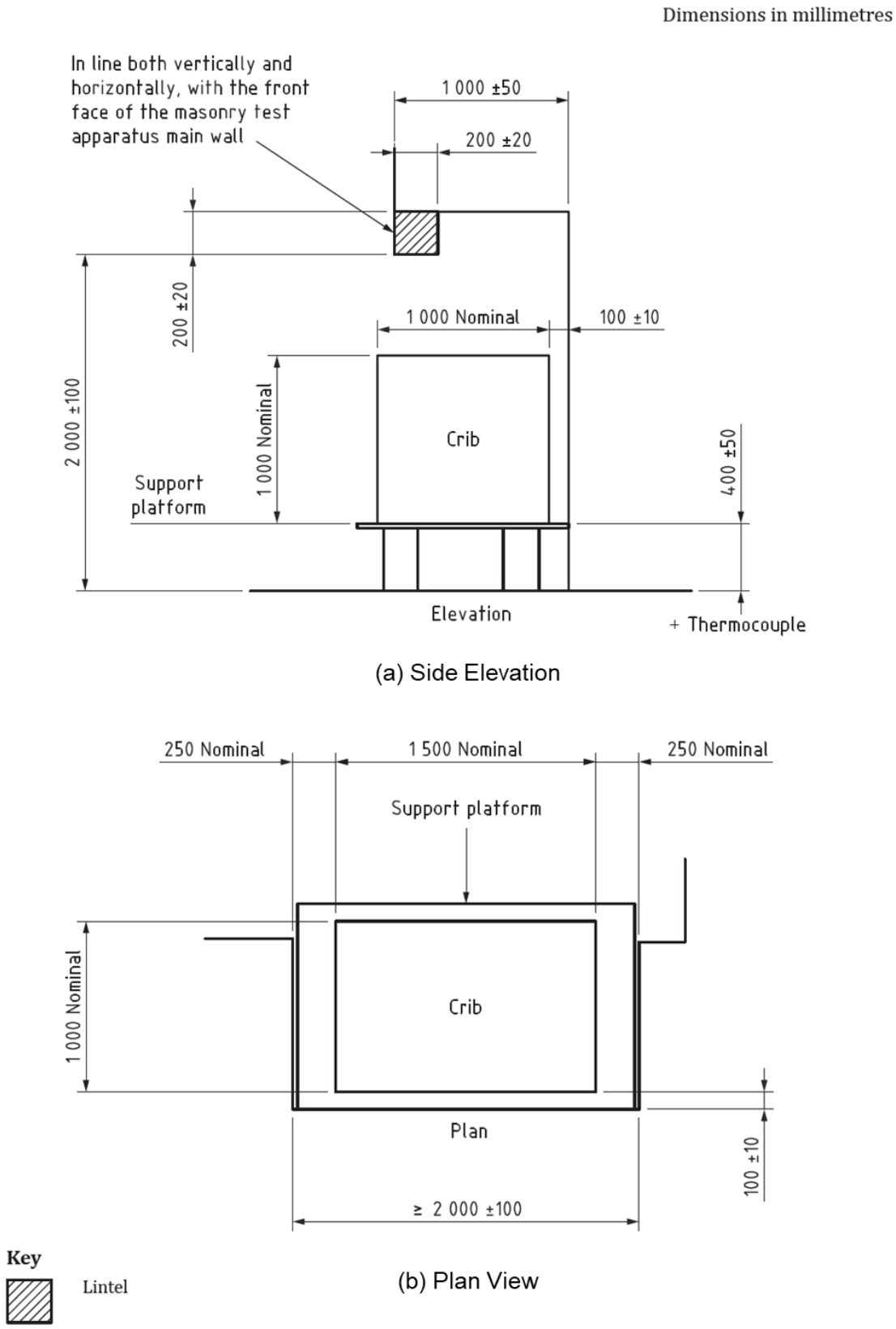

Figure C5-2 The combustion chamber and position of crib based on BS 8414

As shown in Figure C5-3, the modelling geometry includes three distinct balcony levels, namely Balcony 0, Balcony 1, and Balcony 2. The primary balcony rig consisted of steel frame elements which supported each balcony floor.

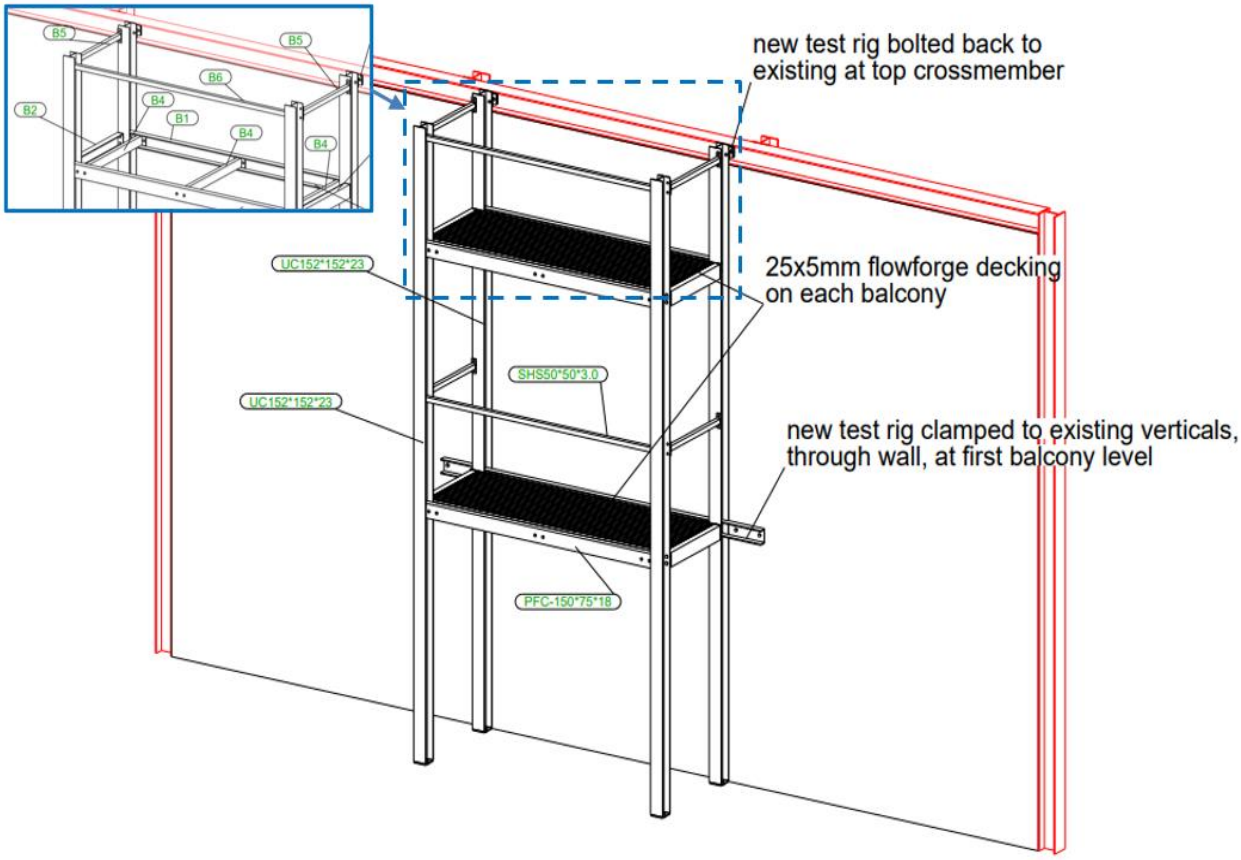

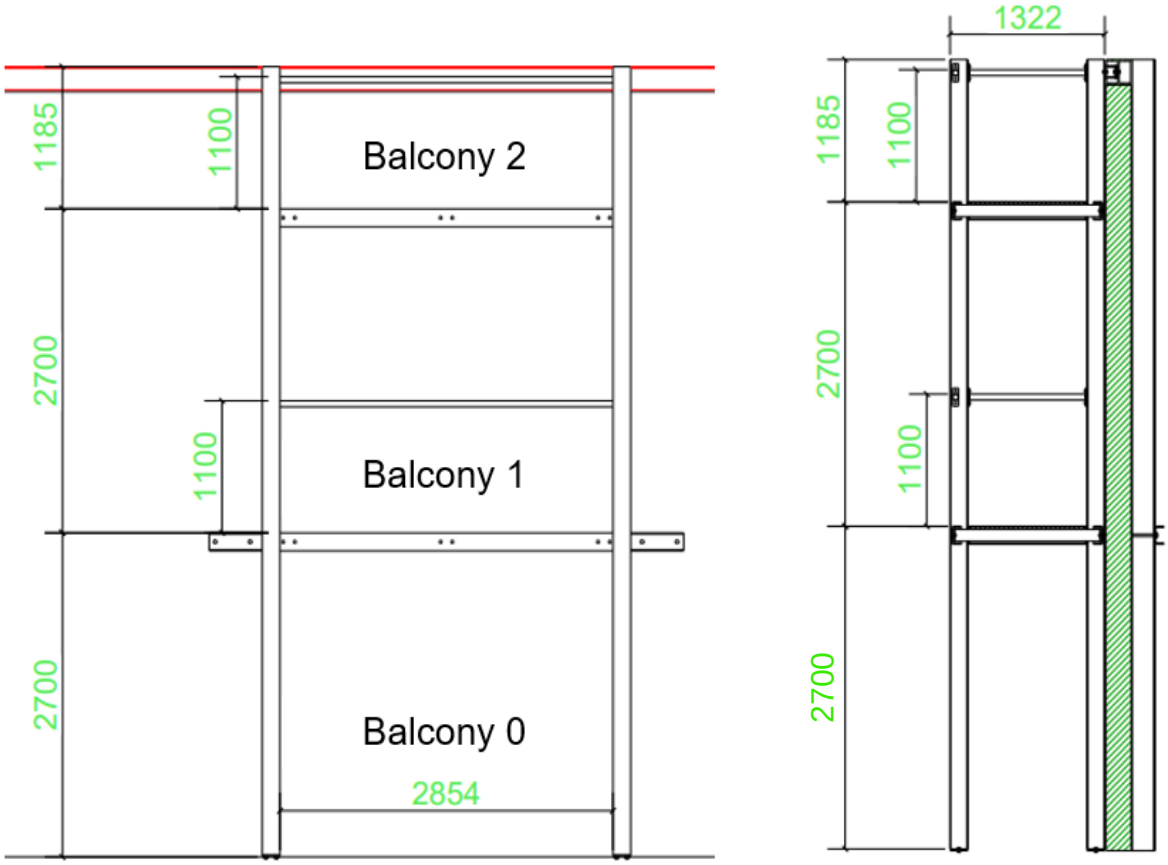

Front elevation

Side elevation

Figure C5-3 Primary balcony rig dimensions with steel frame elements identified

An appropriate representation of the structural framework was essential to ensure that the simulation reflects the physical constraints and behaviour of the actual test setup. Each element of the balcony and combustion chamber, including material properties and dimensions, was selected to replicate the test conditions. The geometrical representation is important for capturing the interaction between the fire dynamics and the structural elements, providing a comprehensive basis for evaluating the fire behaviour and heat transfer in the simulated scenario.

C5-2.6 Surface properties

Table C5-2 provides the surface properties adopted for the modelling geometry. All floors of the balcony are modelled as plasterboard surfaces based on Hopkin et al. [7], and the wall is simulated with concrete properties estimated from BS EN 1992-1-2 [8]. This provides a consistent basis for the simulation, ensuring comparability across other studies, although it is recognised that these properties are intended for design and so include multiple safety factors.

In addition, the balcony frame is represented as a steel surface and the wood crib is represented by a wood surface. Adopting these surface properties should result in a more representative estimation of temperature losses at the boundaries than if the FDS default, thermally inert surface properties had been adopted.

Table C5-2 Geometry surface properties

Parameter	Materials			
	Plasterboard	Concrete	Steel	Wood
Surface	Floor	Façade wall	Steel frame	Wood crib
Thickness	15 mm	100 mm	5 mm	100 mm
Density	780 kg/m^3	2300 kg/m^3	7850 kg/m^3	425 kg/m^3
Specific heat	0.95 kJ/kg/K	0.90 kJ/kg/K	0.46 kJ/kg/K	1.6 kJ/kg/K
Thermal conductivity	0.25 W/m/K	1.4 W/m/K	45.8 W/m/K	0.12 W/m/K
Emissivity	0.70	0.70	0.95	0.90

C5-2.7 Instrumentation and measuring locations

Figure C5-4 shows the instrumentation sensors and measuring locations used in the test. These locations were precisely replicated using PyroSim to create the FDS input file, as shown in Figure C5-5. This is to ensure consistency in comparing the simulation results with the test data. The instrumentation devices selected from the PyroSim library were selected to closely match the sensors used in the test. The devices consist of thermometer devices, wall temperature devices, and radiometer.

The thermometer devices have been used to simulate the K-type Inconel thermocouples with a 1.5 mm diameter and emissivity value of 0.9, which were used to measure gas temperatures in the test. A bead density of 8908.0 kg/m^3 and a bead

specific heat of 0.44 kJ/kg·K have been taken from the default properties specified in PyroSim. For the measuring heat flux, radiometer devices were employed to simulate the radiant heat transfer response of the Gardon gauges.

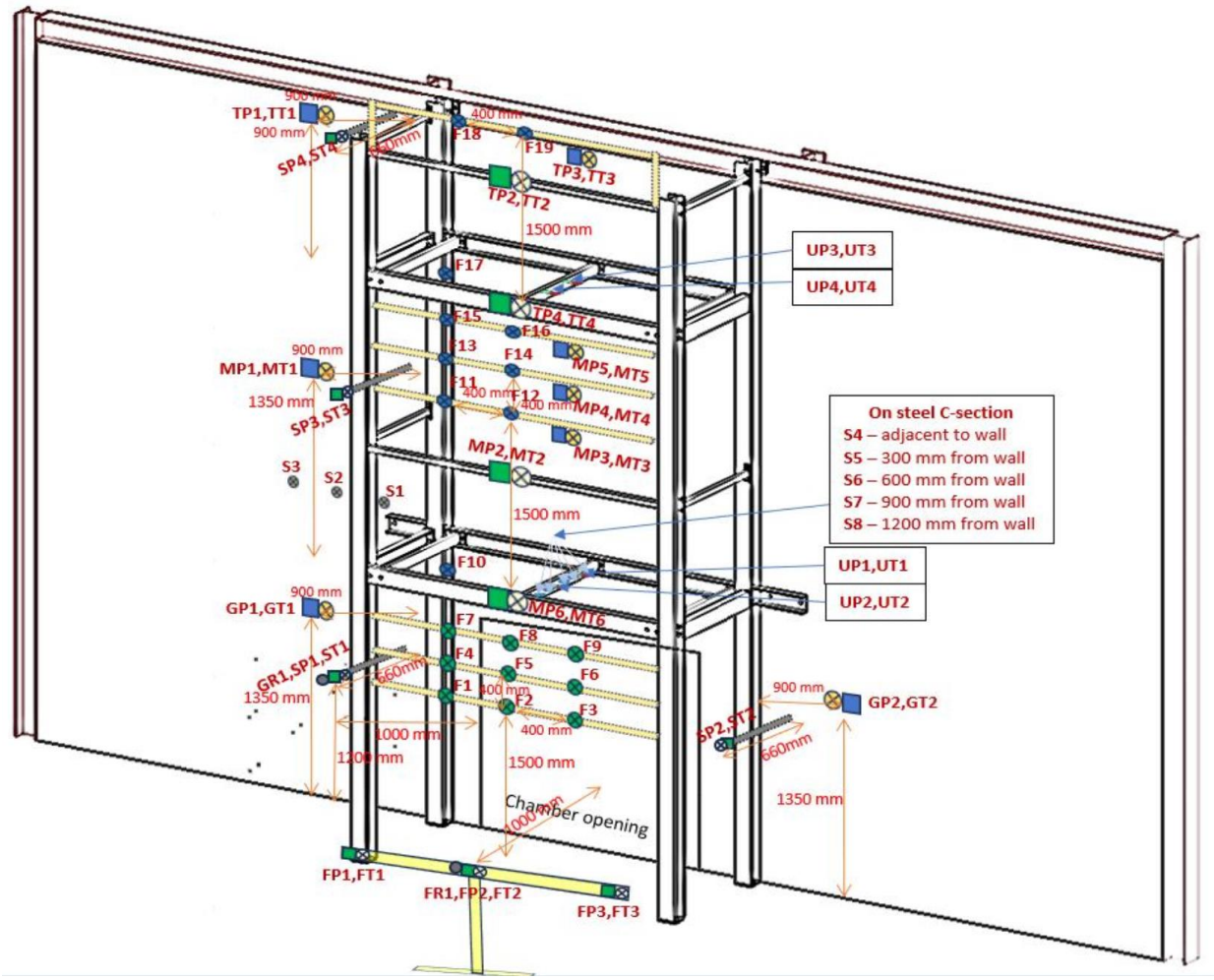

- Plate TC on exposed face
- Inconel TC on exposed face
- Inconel TC on wall
- Plate TC on wall
- Heat flux meter
- 2x Plate TC's underside the Balcony floor – At 450 mm and 900 mm from the wall
- 2x Inconel TC's underside the Balcony floor – At 450 mm and 900 mm from the wall
- 3m long TC facing outwards, extends out by 50 mm
- TC on the steel C-section
  S4 – exposed edge of wall
  S5 – 300mm away from the wall
  S6 – 600mm away from the wall
  S7 – 900mm away from the wall
  S8 – 1200mm away from the wall
- 3m long TC facing the crib, extends out by 50 mm

Nomenclature:
The first word of each acronym is to identify their position:
G - Ground floor
S – Side edge to the chamber opening
M – Middle floor
T – Top floor
F – Front facing Inconels
The second word denotes the instrument:
Fluxmeter (R), Plate TC (P), Inconel (T)

Figure C5-4 Instrumentation plan for the balcony test

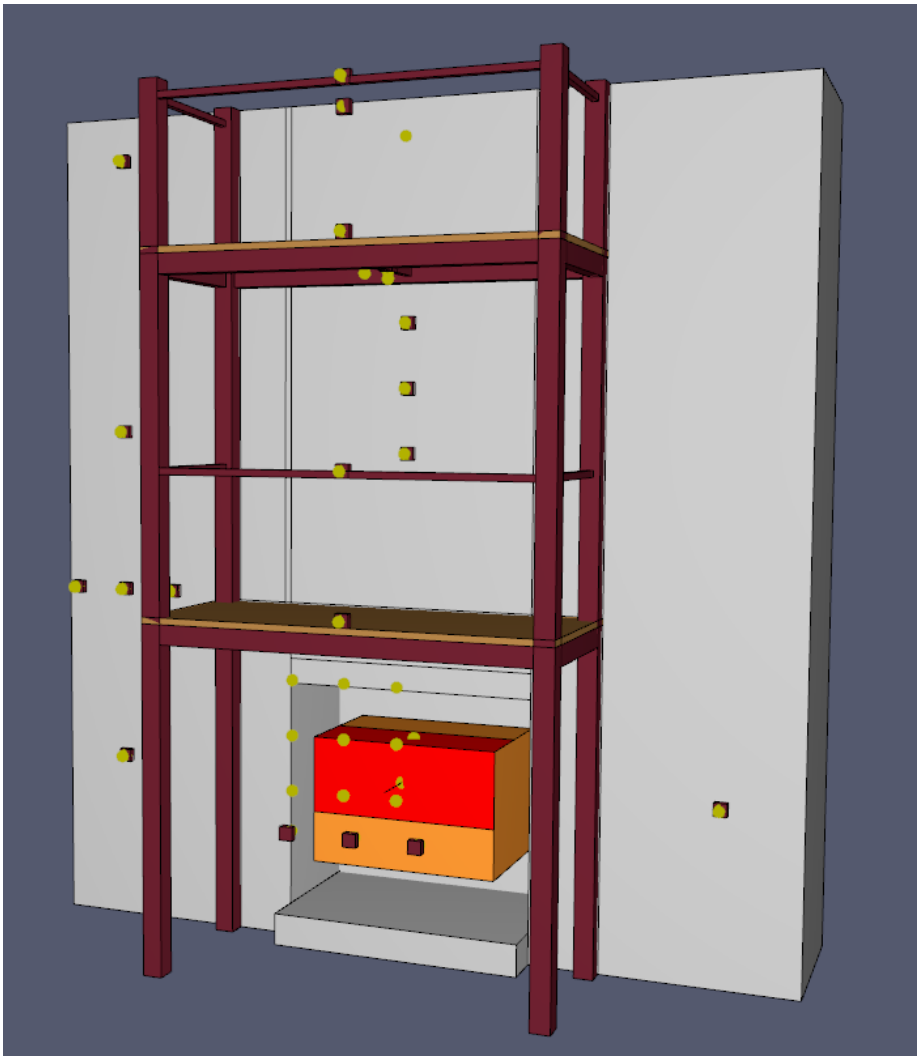

Figure C5-5 Representation of measuring devices and locations for the balcony test. The red zone on the crib indicates the assumed burning region

C5-2.8 Radiation input parameters

To accurately simulate radiative heat transfer in the FDS modelling, several critical radiation input parameters were configured. The Radiation Transport Solver was enabled to incorporate radiative heat transfer calculations into the model. Key parameters included a time step increment of 3 s to balance computational efficiency and accuracy, and an angle increment of 5° for fine angular discretisation. Additionally, 200 solid angles and 60 polar angles were specified to capture detailed directional heat transfer effects. An assumed radiative source temperature of 1200 °C was set based on the expected fire conditions, assuming minimal radiative absorption along the path. The path length was defined as 2.0 m to establish the distance for radiative calculations. This configuration aimed to enhance the accuracy of the radiative heat transfer model.

An initial sensitivity case using default properties showed significant differences in heat flux compared to the test data, leading to the adoption of the above parameters for the current model. However, further calibration may be required in future studies to improve the predictive results.

C5-2.9 Simulation time

Test A was conducted over a total duration of 3600 s (1 hour) to capture the full fire development and decay stages. However, in the current analysis, results are presented only up to 2700 s due to time constraints, as completing the full 3600 s simulation would require additional computational time. The previous 3600 s full simulation using the mesh configuration discussed in Section C5-2.3 took approximately 166 hours (around 7 days) on a high-performance computer. However, the time frame of 2700 s still able to provide sufficient data for analysing fire growth, peak heat release rate, temperature and heat flux at peak HRR including the initial decay stages, allowing meaningful comparison with the actual test data.

C5-3. Results and discussion

C5-3.1 Flame dynamics

Test A was selected as a baseline scenario using non-combustible solid balcony decks with an open balustrade and no additional fire load cribs. A corresponding Fire Dynamics Simulator (FDS) representation was developed to replicate these conditions and was benchmarked against the measurements from Test A. The purpose of this test was to characterise the heat release rate (HRR), heat fluxes, and flame dynamics when only the BS 8414 crib was burning within the combustion chamber. Table C5-3 shows the comparison of fire flame behaviour at different time intervals after ignition between the test and the FDS simulation for the BS 8414 crib.

Table C5-3 Flame characteristics in Test A vs. FDS simulation over time

Time (min)	Fire flame behaviour	
	Test	FDS Simulation
1		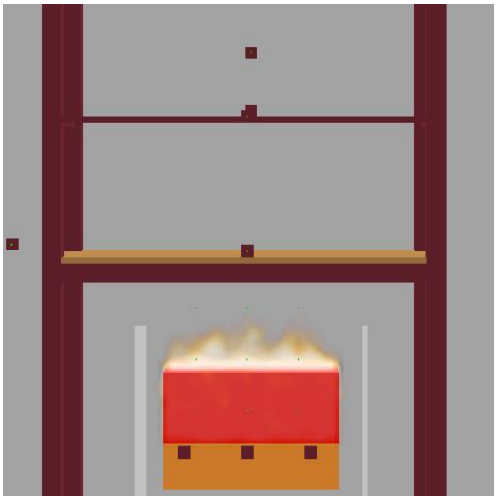
3	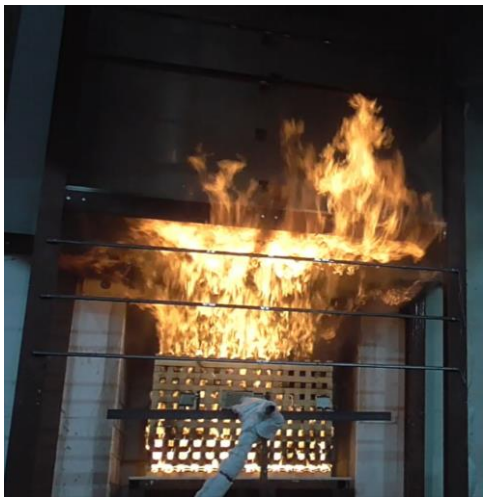	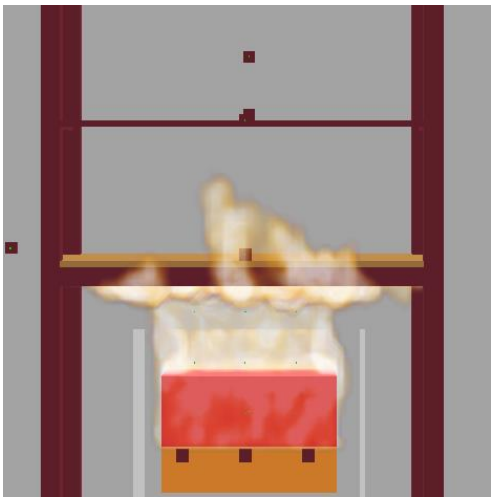

Time (min)	Fire flame behaviour	
	Test	FDS Simulation
5	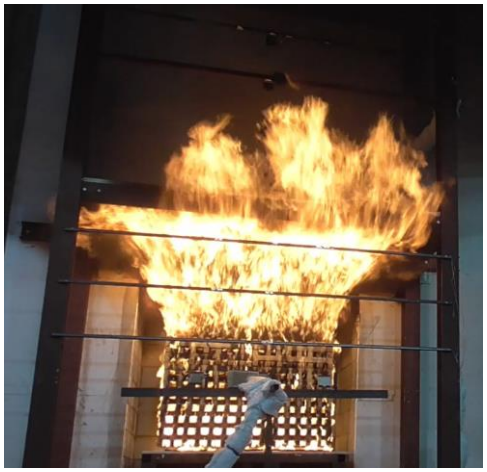	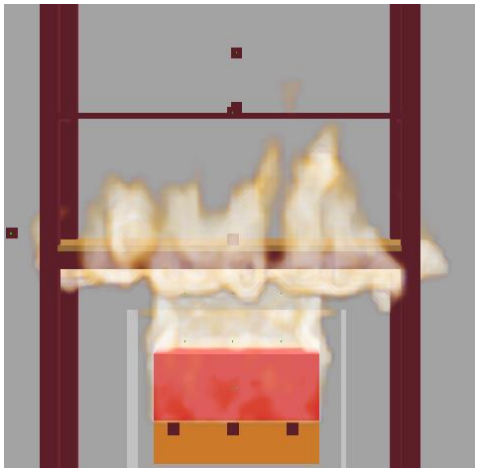
10		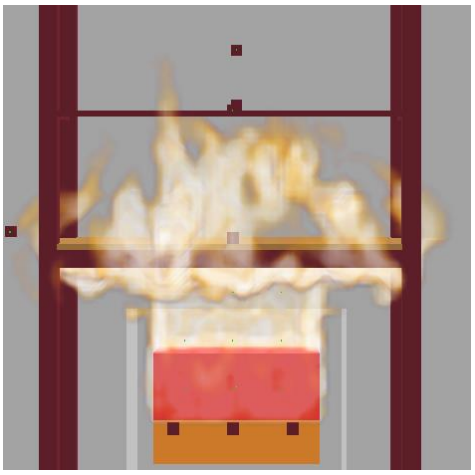
20		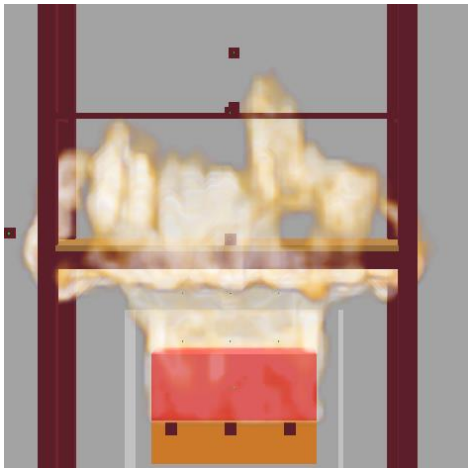

Time (min)	Fire flame behaviour	
	Test	FDS Simulation
30		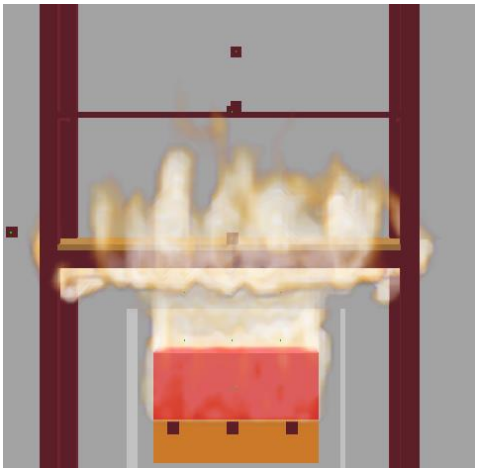
40		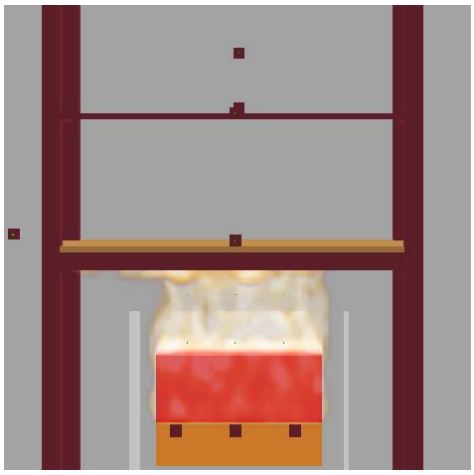

Based on the results presented in Table C5-3, the comparison between the Test A and the FDS simulation shows a generally consistent flame length and behaviour over time, with minimal differences observed from 1 min to 40 min. At 1 min after ignition, both the test and FDS simulation mainly show small flames localised to the base of the crib. However, the test already shows signs of flames leaving the top of the crib. By 3 min after ignition, the test fire has grown rapidly, with flames extending slightly higher and wider than those in the FDS simulation. The FDS simulation at this stage still depicts a compact flame, indicating a slower representation of the rate of flame growth compared to the test.

From 5 min to 30 min, the flames behaviour in the FDS simulation closely match the test observations, with both showing similar flame characteristics that align well. At 5 min after ignition, both Test A and FDS model show that the flames reaching well above the floor of Balcony 1, with lateral spread observed under the balcony floor. At around 20 min following the ignition, where the fire reaches its peak HRR, the flame length is at its maximum height, extending far beyond to the handrail of Balcony 1, indicating fully developed combustion and intense fire behaviour.

However, at 40 min, a noticeable flame deviation occurs. In the test, the wood crib experiences significant changes, which results in altered flame behaviour, such as

reduced flame size and wide. These changes influence the burning rate and subsequently the flame appearance and behaviour. In contrast, the FDS simulation does not account for these changes, resulting in a flame pattern that appears wider than observed in the test.

This comparison highlights that, while the FDS model effectively replicates flame length and behaviour over most of the test duration, it does not capture the effects of changes in the shape of the crib, which becomes significant in prolonged fire scenarios. However, this limitation is acceptable as the results are primarily focused on the fire growth phase up to the peak heat release rate (HRR) for temperature and radiant heat flux.

C5-3.2 Heat release rate

Figure C5-6 shows the overall comparison of the heat release rate (HRR) measurements between the test and the numerical simulation for the wood crib. The blue line represents the measured data from Test A, while the red dashed line indicates the FDS results. FDS was set up by using the HRR curve data obtained from Test A to ensure that the simulation accurately replicates the HRR curve observed in the test.

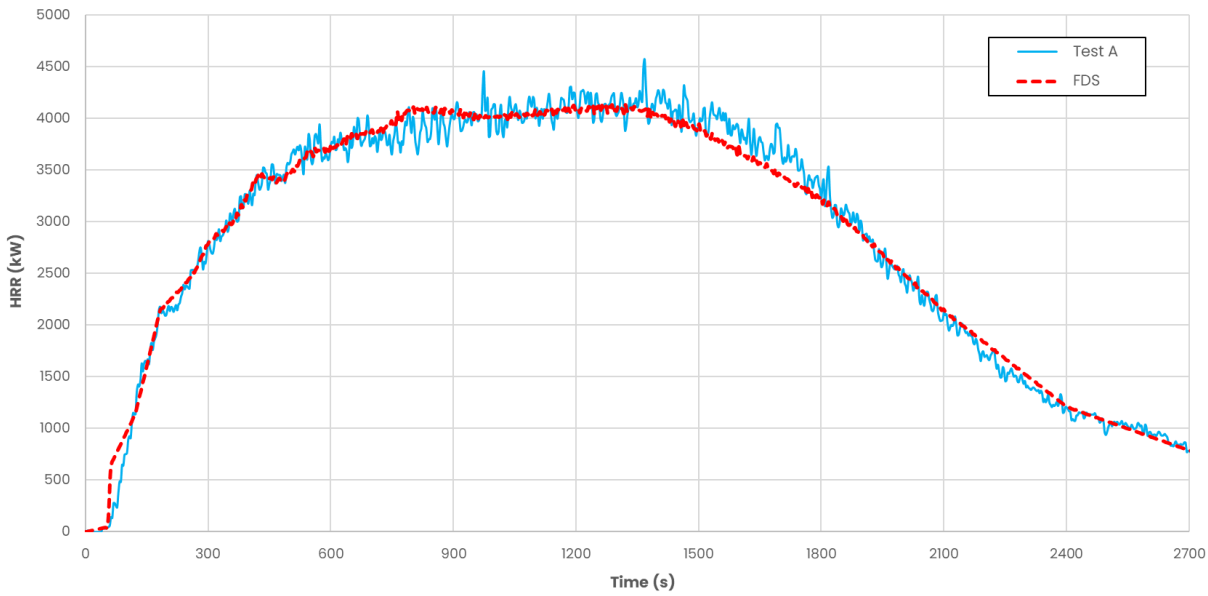

Figure C5-6 Overall comparison of heat release rate measurements

The graph shows a good correspondence between the test and simulated HRR profile across all phases of the fire, including growth, peak, and decay. This close alignment indicates that the FDS simulation effectively replicates the measured HRR. This accurate replication of HRR is essential as it serves as a foundation for further detailed analyses, such as replicating the gas temperatures derived the thermocouple devices and the radiant heat flux measured though the Gardon heat flux gauges.

C5-3.3 Temperatures and heat flux

This section compares the FDS simulation output against the measurements from the Test A. The measurement devices were positioned in the FDS simulation according to the test setup as shown in Figure C5-4.

C5-3.3.1 Facing the mid-height of the wood crib

The temperature and heat flux measurements facing the wood crib were estimated by using devices to represent the Inconel thermocouples (TCs) and heat flux gauges. The devices were placed 1.0 m away from the face of the wood crib and 1.15 m above the floor level. The side devices were located with a horizontal offset of 0.5 m from the centre device. The device locations are shown indicatively in Figure C5-7.

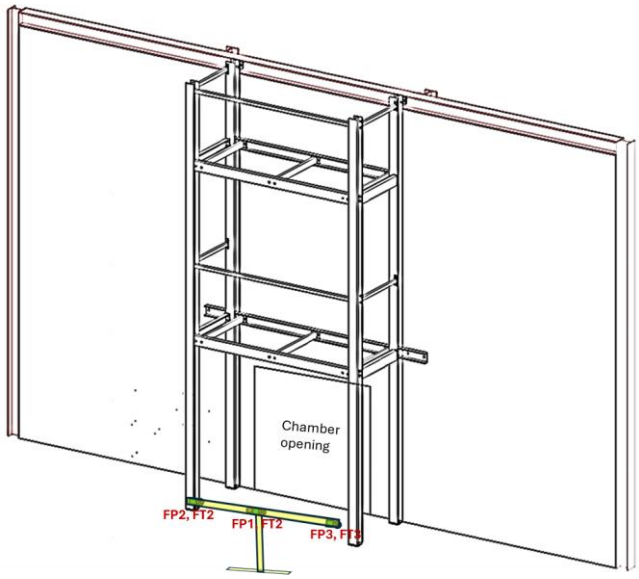

Figure C5-7 Measurement devices facing the mid-height of the wood crib

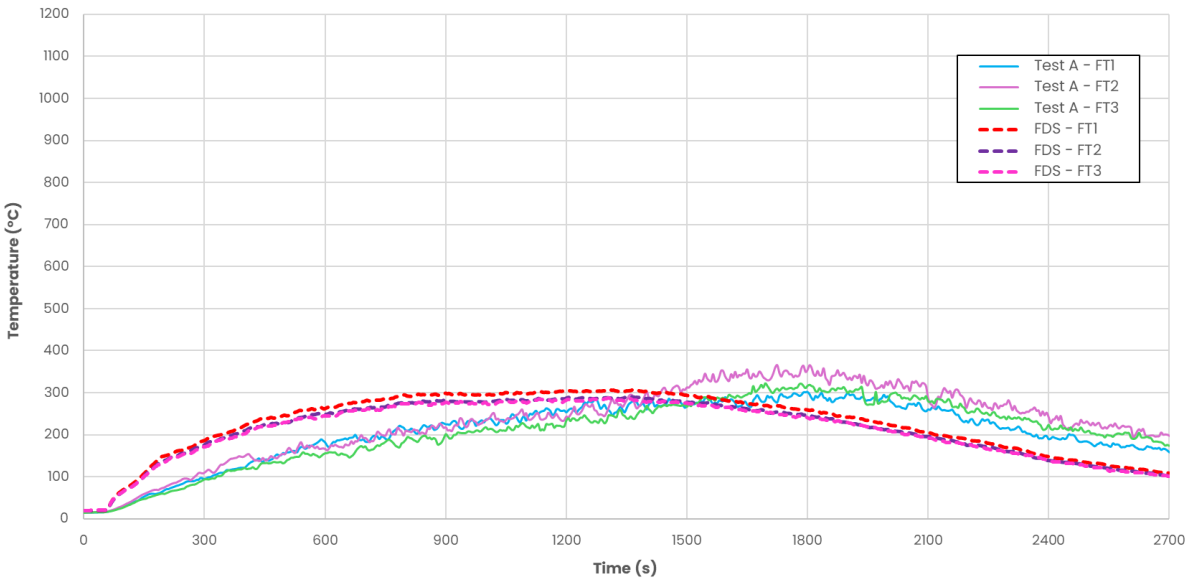

Figure C5-8 Temperature of the TCs facing the mid-height of the wood crib

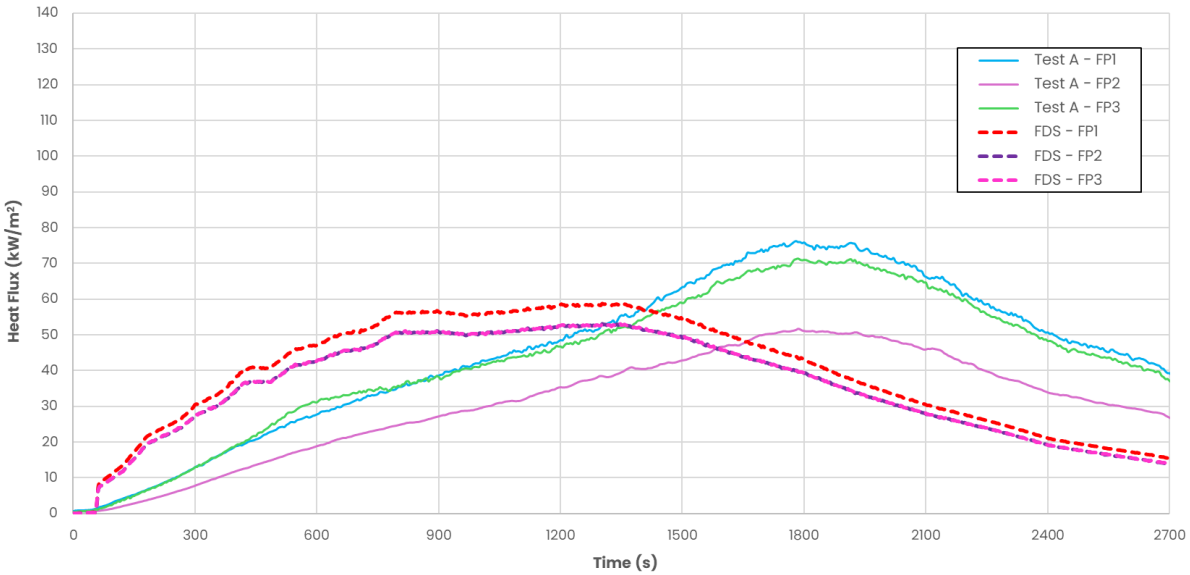

Figure C5-9 Radiant heat flux facing the mid-height of the wood crib

Figure C5-8 and Figure C5-9 show the temperature and heat flux measurements taken from Inconel TCs and radiometer devices placed at the mid-height of the wood crib. In Figure C5-8, the TC measurements temperature indicate similar peak temperatures between Test A and the FDS simulation, reaching around 300°C to 350°C across all positions (FT1, FT2, FT3). However, the FDS simulation exhibits a more rapid initial temperature rise while the test measurements show a more gradual increase in temperature.

In Figure C5-9, the heat flux comparison between Test A and the FDS simulation showing an initial increase. However, Test A exhibits higher peak heat fluxes, particularly at FP1 and FP2, reaching around 75 kW/m^2. In contrast the FDS simulation underestimates these peaks at approximately 60 kW/m^2 and at an earlier stage in the fire. Overall, while the FDS simulation captures the general pattern of the heat flux, it underestimates the maximum heat flux. This indicates the FDS model may be needed a further calibration.

C5-3.3.2 Side wall on ground floor

The temperature and heat flux on the side wall of the balcony were measured by using the Inconel thermocouples (TCs) and radiometer devices. The devices were positioned with TCs and radiometer placed at the side wall with a height of 1.35 m above ground level and 0.9 m away from the neighbouring steel columns. The locations of these devices are shown indicatively in Figure C5-10.

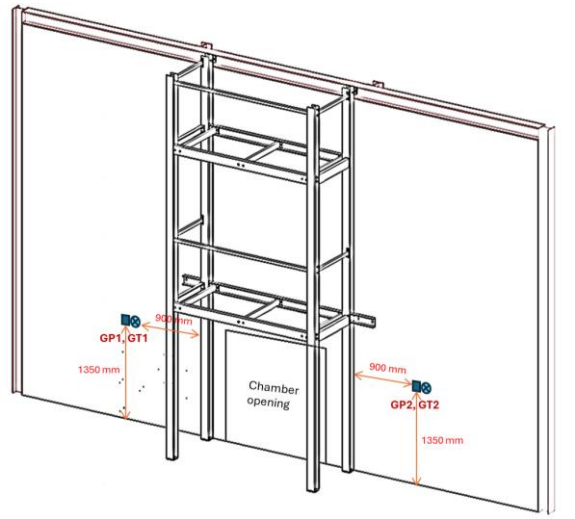

Figure C5-10 Measurement devices on the side wall on ground floor

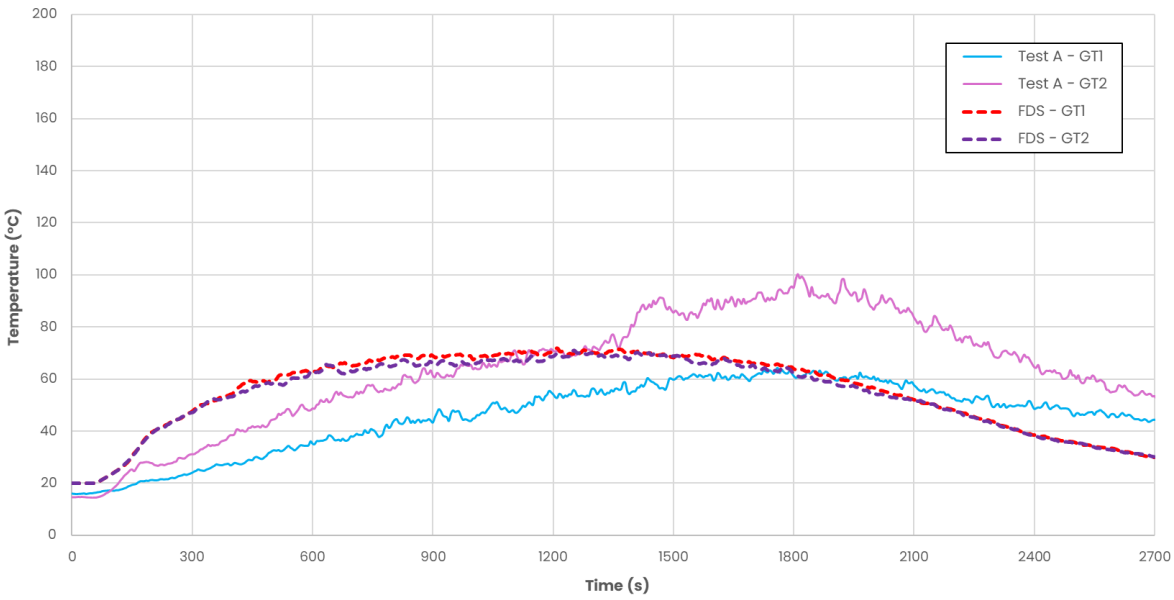

Figure C5-11 Temperature of the TCs on the side wall on ground floor

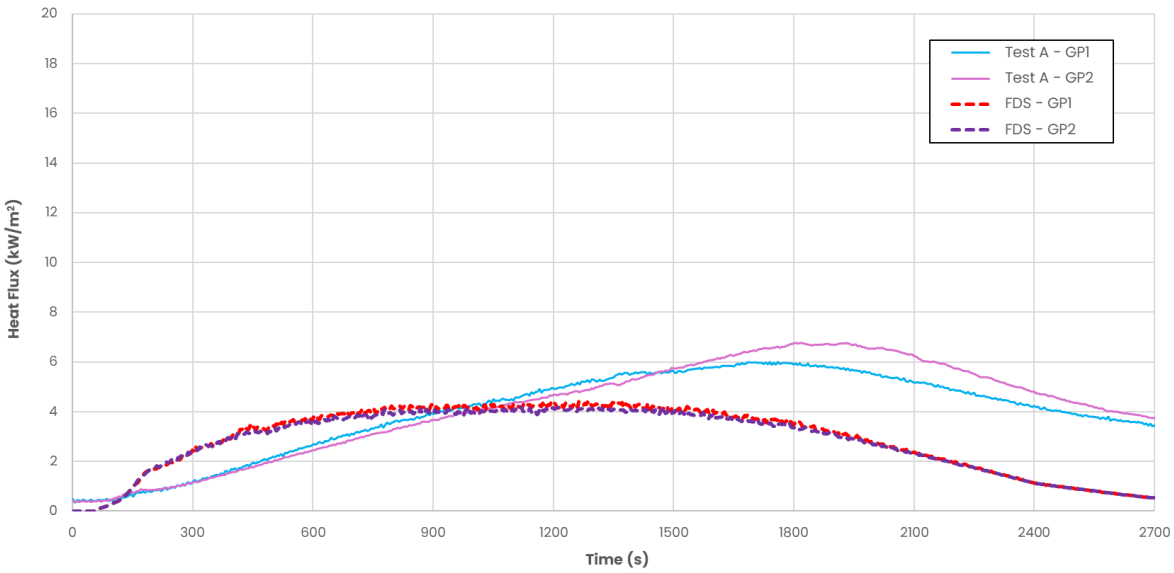

Figure C5-12 Radiant heat flux on the side wall on ground floor

Figure C5-11 and Figure C5-12 show the temperature and heat flux measurements taken from Inconel thermocouples (TC) and radiometers positioned at the side wall of the balconies at ground floor. In Figure C5-11, the temperature trends for Test A and the FDS simulation (GT1 and GT2) show a similar rising pattern, with the FDS model capturing the overall trend. However, Test A reaches higher peak temperatures, particularly in GT2 (at around 100°C), compared to the FDS simulation, which slightly underestimates these peaks with maximum value around 70°C. After peaking, both datasets show a temperature decline, but the FDS model displays a smoother decrease than the fluctuations seen in Test A.

In Figure C5-12, FDS predicts lower peak heat flux values of around 4 kW/m^2 for GP1 and GP2, while test peaks reach about 7 kW/m^2 and 6 kW/m^2, respectively. The trend for the heat flux in FDS model somewhat aligns with the Test A data up to the peak, but shows an earlier decline compared to Test A. These results indicate that while the FDS simulation effectively captures the general trend of the temperature and heat flux, slight adjustments in the modelling may improve its accuracy for peak values of the data.

C5-3.3.3 Underneath Balcony 1

The temperature and heat flux on the side wall were measured Inconel thermocouples (TCs) and radiometer devices. The measurement devices were positioned with TCs and radiometer placed at a height of 1.35 m above ground level and 0.9 m away from the beam steel. The locations of these devices are shown indicatively in Figure C5-13.

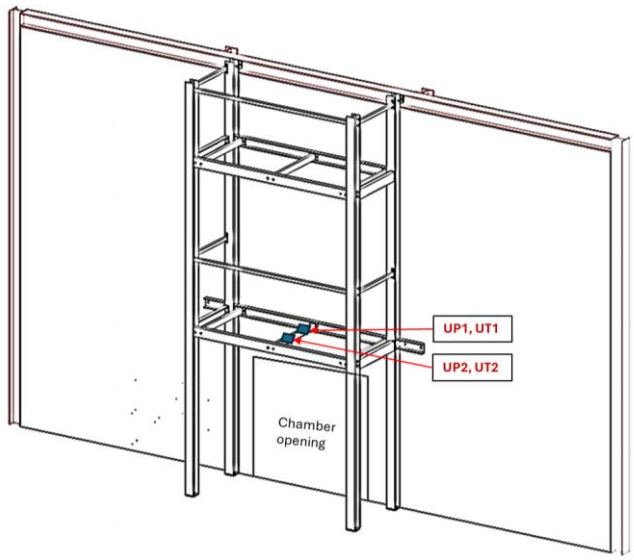

Figure C5-13 Measurement devices underneath Balcony 1

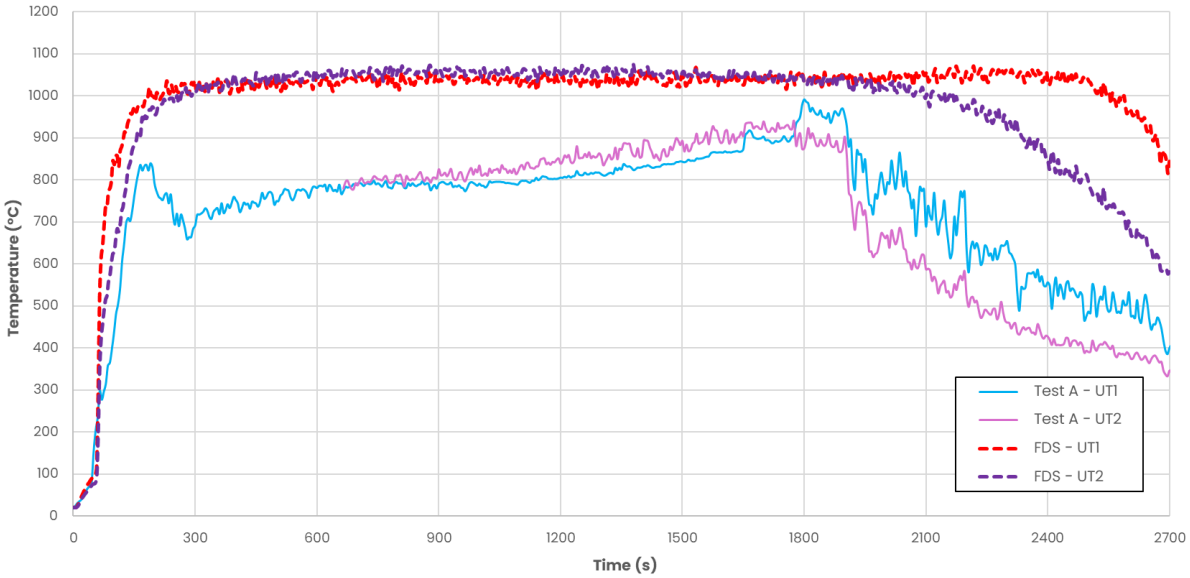

Figure C5-14 Temperature of the TC underneath Balcony 1

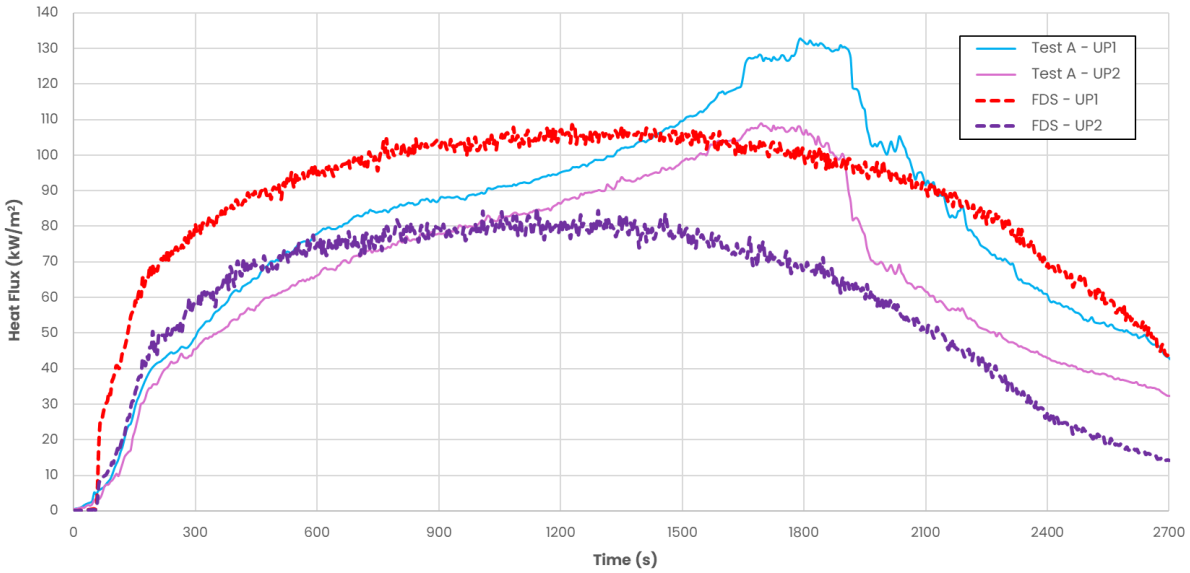

Figure C5-15 Radiant heat flux underneath Balcony 1

In Figure C5-14, the FDS model closely follows the temperature trends in the initial stages of Test A, with both Test A and the FDS showing a rapid increase in temperature for the Inconel TC within the first 150 s. However, the FDS model reaches a higher peak temperature than Test A, with peak values of approximately 1050 °C for both UT1 and UT2. In contrast, the peak values for Test A are around 1000 °C for UT1 and 950 °C for UT2, respectively. After approximately 1800 s, the temperature in Test A begins to decrease, while the FDS data still maintains a more stable, high temperature before gradually declining.

In Figure C5-15, the heat flux measurements show a similar pattern between FDS and the test data initially, but FDS peaks at around 110 kW/m^2 for UP1 and 80 kW/m^2 for UP2, while the test A data peaks at around 130 kW/m^2 for UP1 and 110 kW/m^2 for UP2. FDS maintains a more consistent phase before declining, while the test data shows a more gradual rise to the peak.

C5-3.3.4 Thermocouples facing the wood crib on ground floor

This section presents the temperature measured using Inconel thermocouples (TCs) positioned facing the wood crib on the ground floor. The thermocouples were positioned with lower set placed at the railing at a height of 1.5 m above the ground, and the side TCs, were placed 0.4 m away from the middle TC. The indicative locations of these devices are illustrated in Figure C5-16.

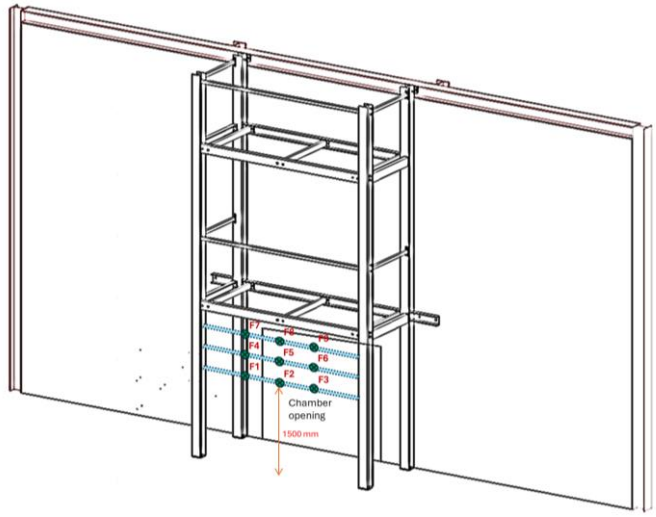

Figure C5-16 Measurement devices facing the crib on ground floor

Figure C5-17 to Figure C5-19 show the temperature measurements taken from the Inconel thermocouples (TC) positioned at the railing facing the wood crib on ground floor.

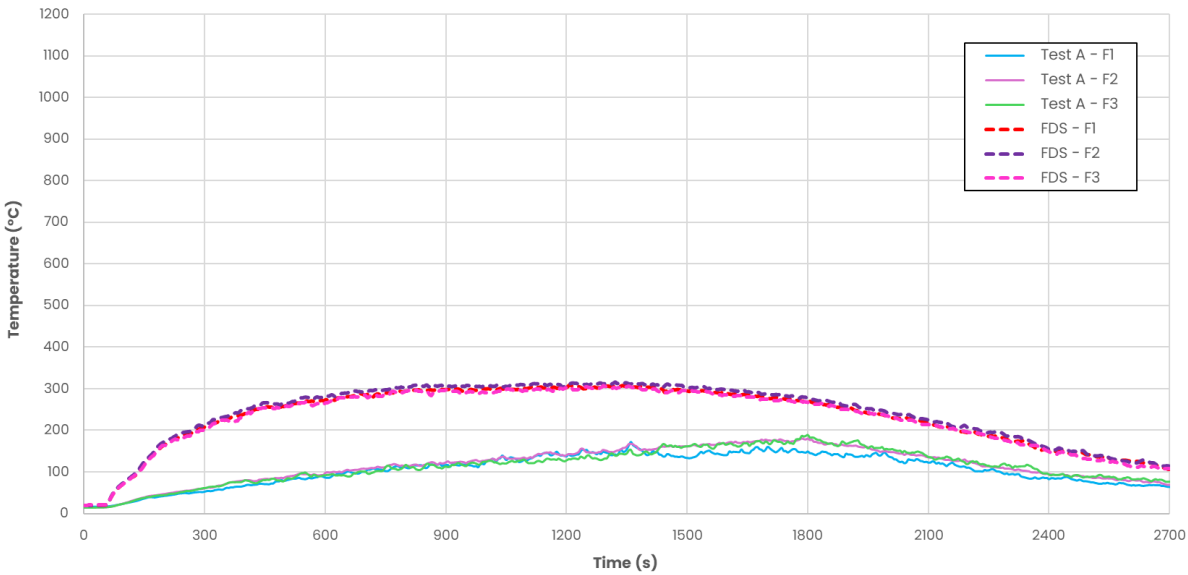

Figure C5-17 Temperature of the lower TCs facing the wood crib on ground floor

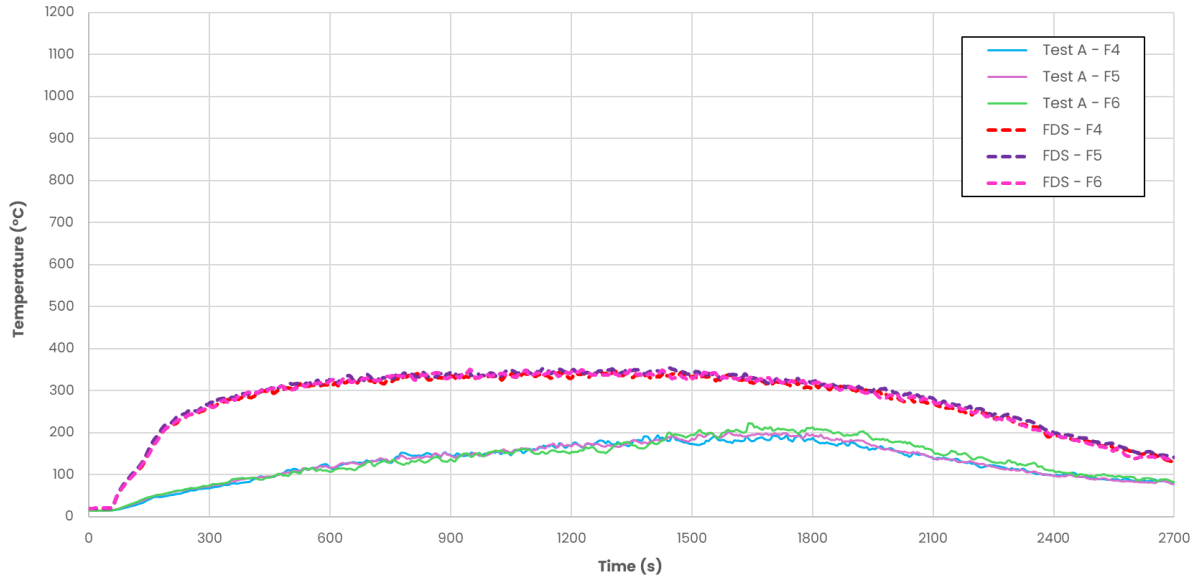

Figure C5-18 Temperature of the middle TCs facing the wood crib on ground floor

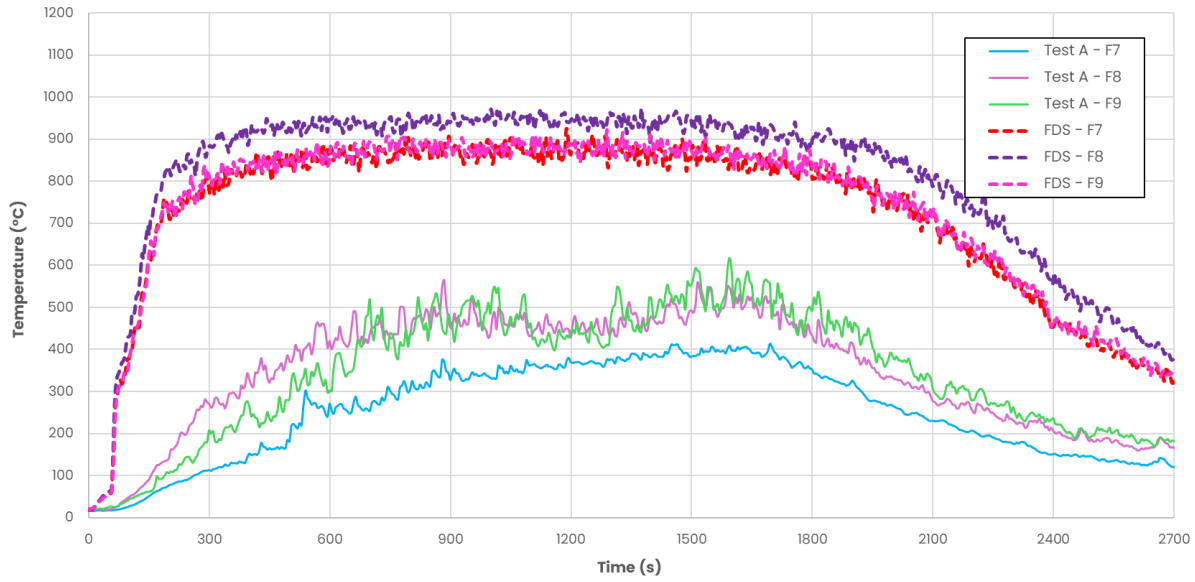

Figure C5-19 Temperature of the upper TCs facing the wood crib on ground floor

Figure C5-17 to Figure C5-19 indicate a notable discrepancy between the test and FDS data for all sets (F1 to F9). The test data show a more gradual rise to peak temperatures followed by a slow decline. In contrast, the FDS simulations results exhibit a much steeper rise, reaching their peak values earlier and with significantly higher temperatures than observed in the test. For example, while the test data peaks range approximately 200 °C to 600 °C, the FDS predictions surpass these values, with data peaks range around 300 °C to 950 °C. The consistent overprediction and early peaking across all the FDS results indicate a need for adjustments or further calibration to better match the observed test behaviour.

C5-3.3.5 Wall adjacent to the steel frame at Balcony 1

This section presents the temperature on the side wall adjacent to the steel frame at the at floor level of Balcony 1 measured by using Inconel thermocouples (TCs). All these

thermocouples, labelled as S1, S2, and S3, are located at intervals of 0.4 m away from each other, starting at a distance of 0.4 m away from the steel frame. The locations of these devices are shown indicatively in Figure C5-20.

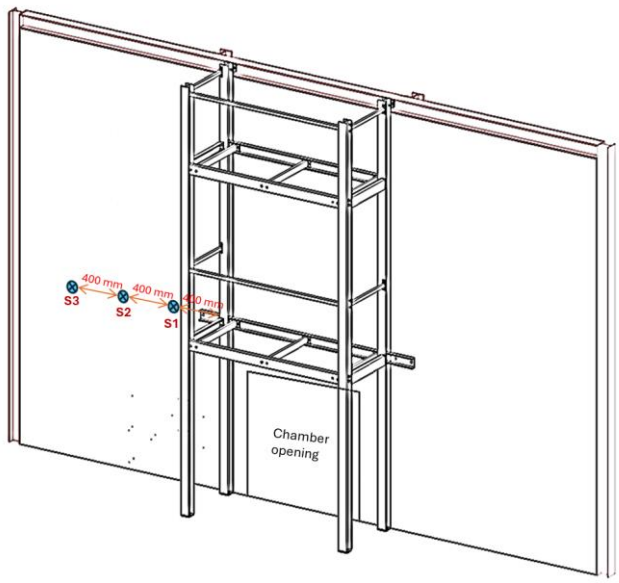

Figure C5-20 Measurement devices on the side wall adjacent to the steel frame

Figure C5-21 shows the temperature measurements taken from the Inconel thermocouples (TC) positioned on the side wall adjacent to the steel frame at the at Balcony 1 floor level.

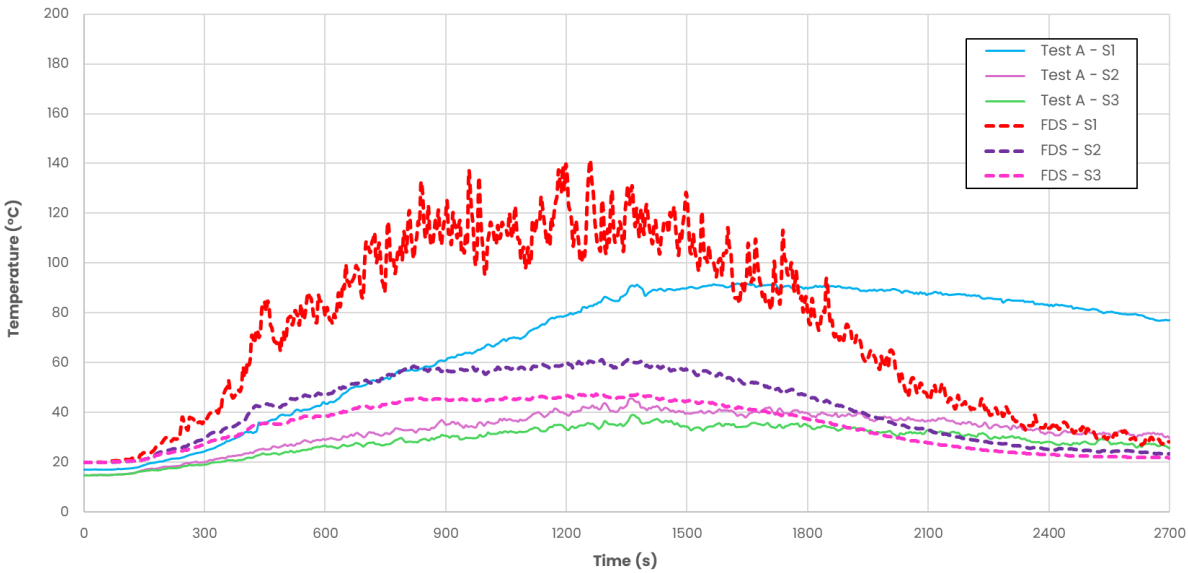

Figure C5-21 Temperature of TCs on the side wall adjacent to the steel frame at the at Balcony 1 floor level

Figure C5-21 indicates the test data, shown by the solid lines (S1, S2, S3), show a gradual increase in temperature, peaking around 90 °C for S1, 40 °C for S2, and 30 °C for S3. The temperature then decreases steadily over time. In contrast, the FDS results (dashed lines) significantly overpredicts the temperature for S1, reaching a peak temperature around 140 °C, and shows a much higher variability compared to the test

data. However, the FDS results for S2 and S3 demonstrate a closer match to the Test A measurements compared to S1, still they are slightly higher. The FDS data for S2 and S3 show relatively low and stable temperatures, with peaks around 60°C and 45°C, respectively.

While there are minor discrepancies for S2 and S3, the overall pattern and magnitude of the temperature rise and fall are more coherent between the test and simulated data for these two positions. This indicates that, unlike S1, FDS has a better prediction capability for the gas temperatures associated with S2 and S3. Examining the photographs from the test in Table C5-3 suggests that the flames may have directed themselves more towards the right-hand side (as seen facing the balconies) and therefore this may account for the lower measured temperatures when compared with the FDS results.

C5-3.3.6 Side wall at Balcony 1 railing level

This section presents the temperature and heat flux measurements on the side wall at Balcony 1 railing level using Inconel thermocouples (TCs) and radiometer devices. The devices were placed at a height of 1.35 m above at Balcony 1 floor level and 0.9 m away from the steel frame. The locations of these devices are shown indicatively in Figure C5-22.

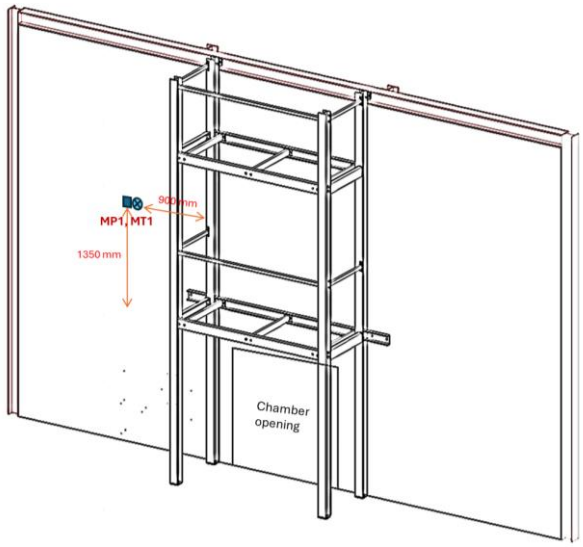

Figure C5-22 Measurement devices on the side wall at Balcony 1 railing level

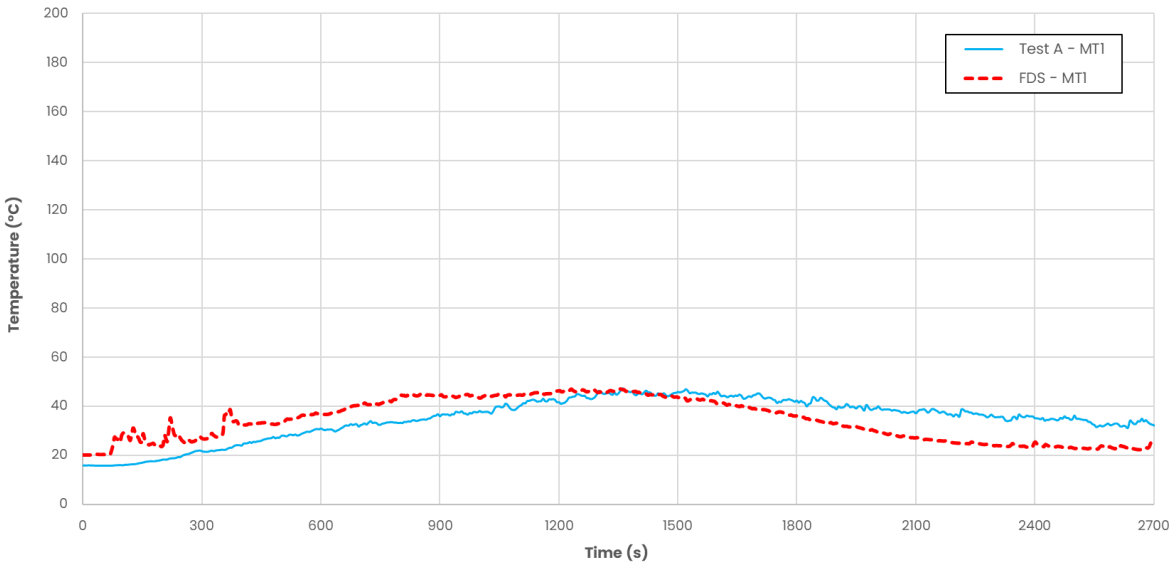

Figure C5-23 Temperature of the TC on the side wall at Balcony 1 railing level

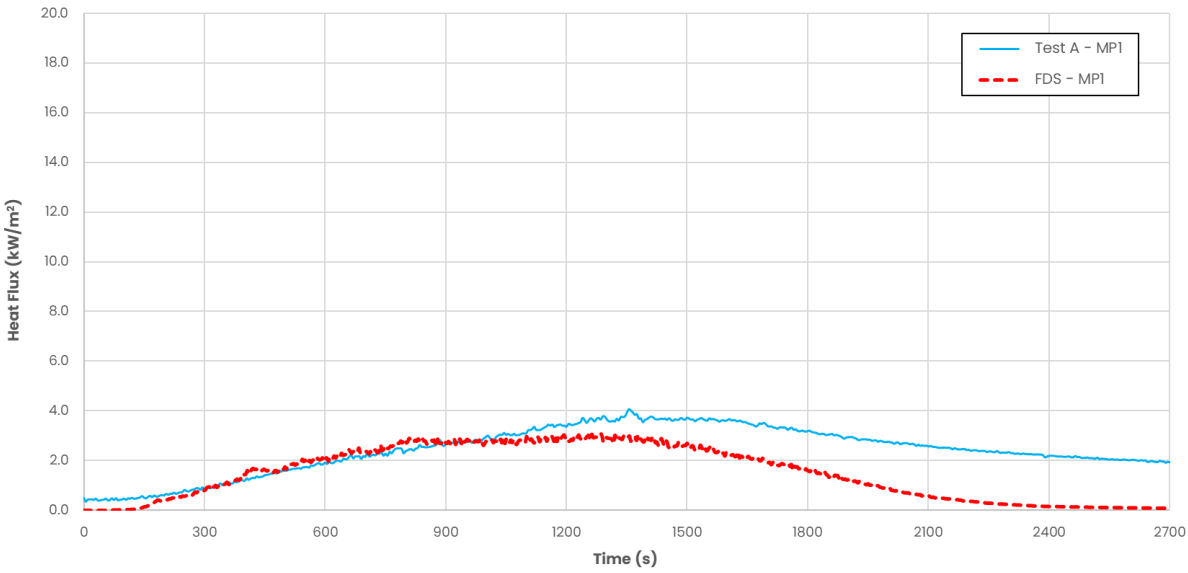

Figure C5-24 Radiant heat flux on the side wall at Balcony 1 railing level

Figure C5-23 and Figure C5-24 show the temperature and heat flux measurements taken from Inconel thermocouples (TC) and radiometer devices placed at the side wall of the balconies at Balcony 1 railing level. Based on both graphs, the FDS model reasonably captures the temperature and heat flux trends compared to the Test A measurements at this location.

In Figure C5-23, the temperature (MT1) data shows that both the FDS simulation and Test A data reach the same peak value of approximately 40°C at around 1300 s. However, there are some minor differences in behaviour before and after the peak. Initially, the FDS model shows a slightly higher temperature than Test A. After 1500 s, the temperature in the FDS simulation begins to decline, resulting in lower values compared to Test A in the later stages.

Figure C5-24 shows a similar trend of measured heat flux between the FDS simulation and Test A in the initial stage of the study before 1000s, with both showing a gradual increase. Although the beginning pattern aligns well, the FDS data tends to slightly underestimate the heat flux values, with Test A peaking around 4 kW/m^2, while the FDS simulation reaches slightly lower values about 3 kw/m^2.

C5-3.3.7 Balcony 1 handrail

This section presents the temperature and heat flux measurements in the FDS modelling at the Balcony 1 handrail using an Inconel thermocouple (TC) and radiometer device. The devices were placed at the handrail at the first-floor level. The device locations are indicatively shown in Figure C5-25.

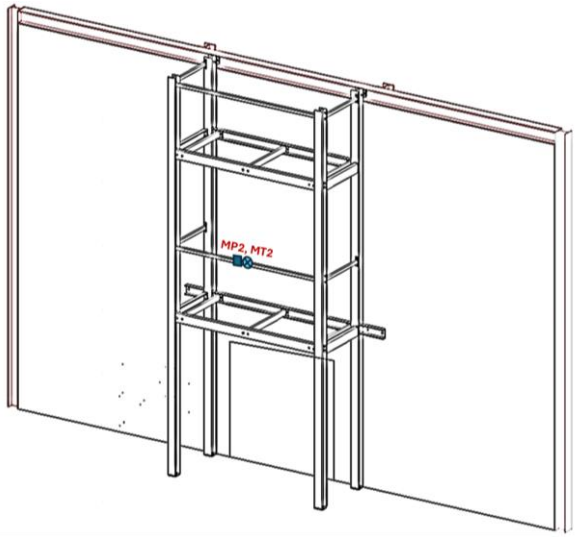

Figure C5-25 Measurement devices at the handrail on first floor

Figure C5-26 and Figure C5-27 shows the temperature and heat flux measurements taken from Inconel thermocouple (TC) and radiometer positioned at the Balcony 1 handrail.

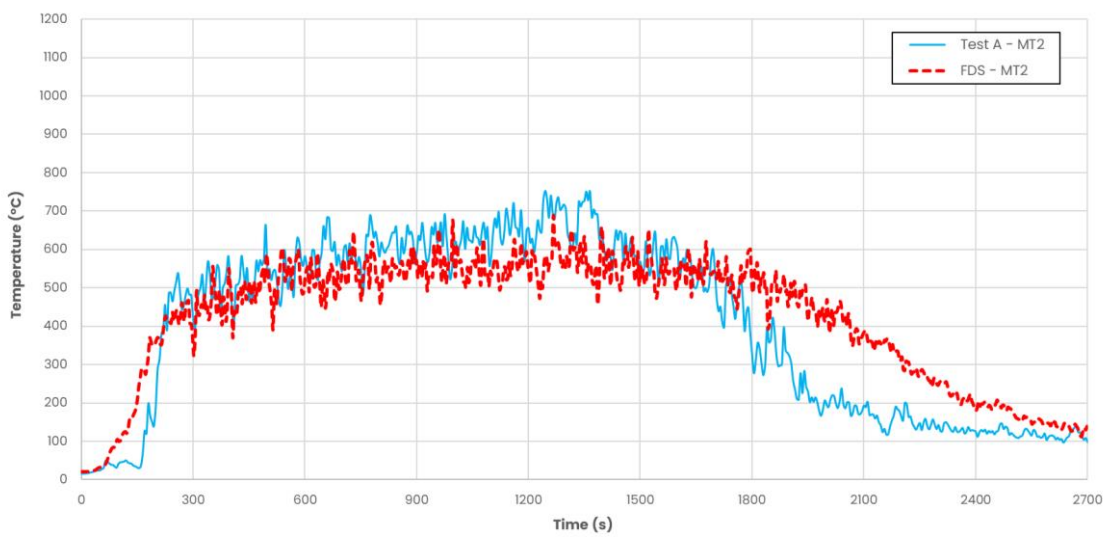

Figure C5-26 Temperature of the TC at the handrail on first floor

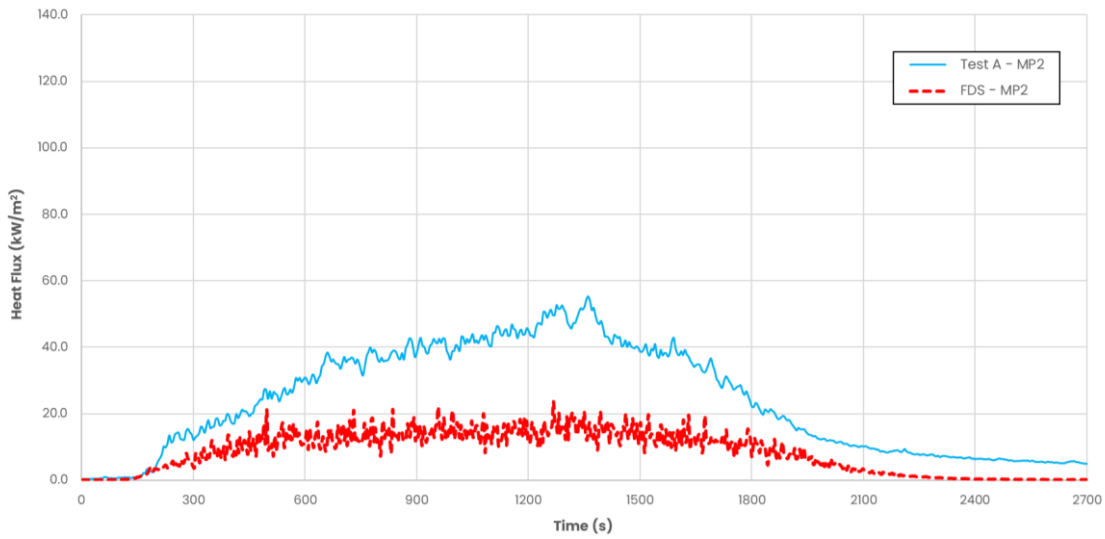

Figure C5-27 Radiant heat flux at the handrail on first floor

In Figure C5-26, the result indicates that both the FDS model and Test A follow a similar overall trend, with a rapid increase in temperature in the early stages, peaking around 600 to 700 °C. However, Test A shows higher fluctuations around the peak temperature, while the FDS simulation is more stable, maintaining a lower peak temperature compared to the test. After reaching the peak, both the FDS model and Test A show a decline in temperature, but the decline in the FDS model is more gradual.

Figure C5-27 shows the heat flux measurements, where the Test A reaches a higher peak radiant heat flux of approximately 50 kW/m^2, whereas the FDS model underestimates this peak, reaching only around 20 kW/m^2. This discrepancy indicates that while the FDS model captures the general shape of the heat flux trend, it may require further calibration to accurately predict peak heat flux values observed in the test.

C5-3.3.8 Wall behind Balcony 1

This section presents the temperature and heat flux measurements on the facade wall behind Balcony 1 using Inconel thermocouples (TCs) and radiometer devices. The TCs are labelled as MT3, MT4, and MT5, along with the heat flux devices, which are labelled as MP3, MP4, and MP5. They are placed vertically at intervals of 0.5 m from each other. The lowest devices (MP3/MT3) are located 1.2 m above the floor of Balcony 1, with the middle devices (MP4/MT4) positioned 0.5 m above the lower pair, and the top devices (MP5/MT5) another 0.5 m higher. The locations are shown in Figure C5-28.

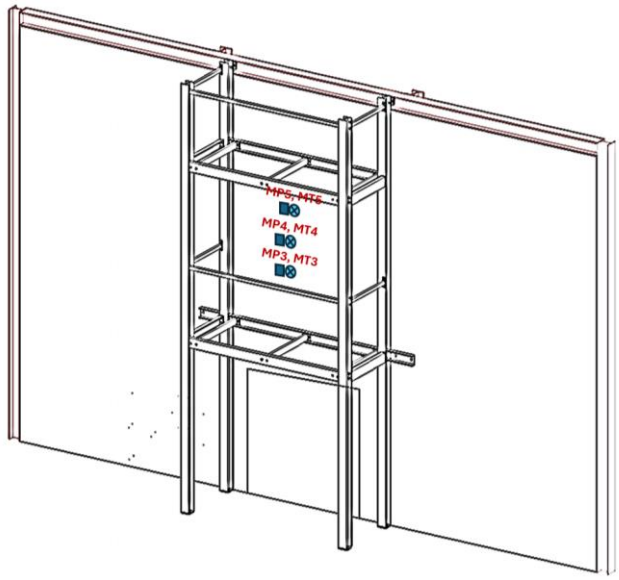

Figure C5-28 Measurement devices on the facade wall behind Balcony 1

The graphs in Figure C5-29 and Figure C5-30 show temperature and heat flux data from Inconel thermocouples (TCs) and radiometer devices positioned at the first-floor balcony handrail in the FDS modelling.

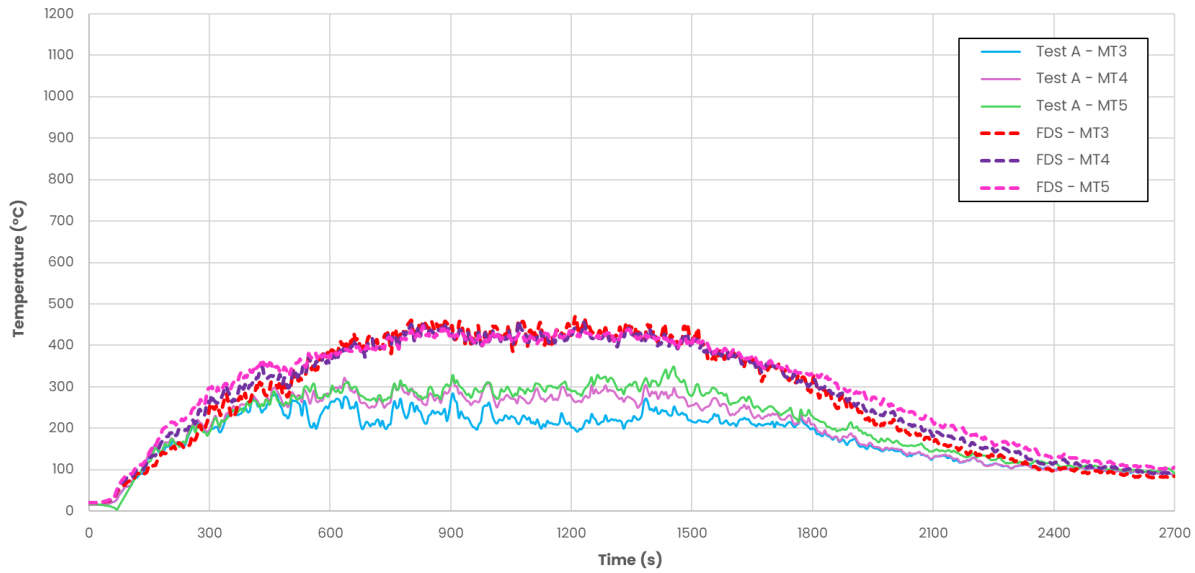

Figure C5-29 Temperature of the TC on the facade wall behind Balcony 1

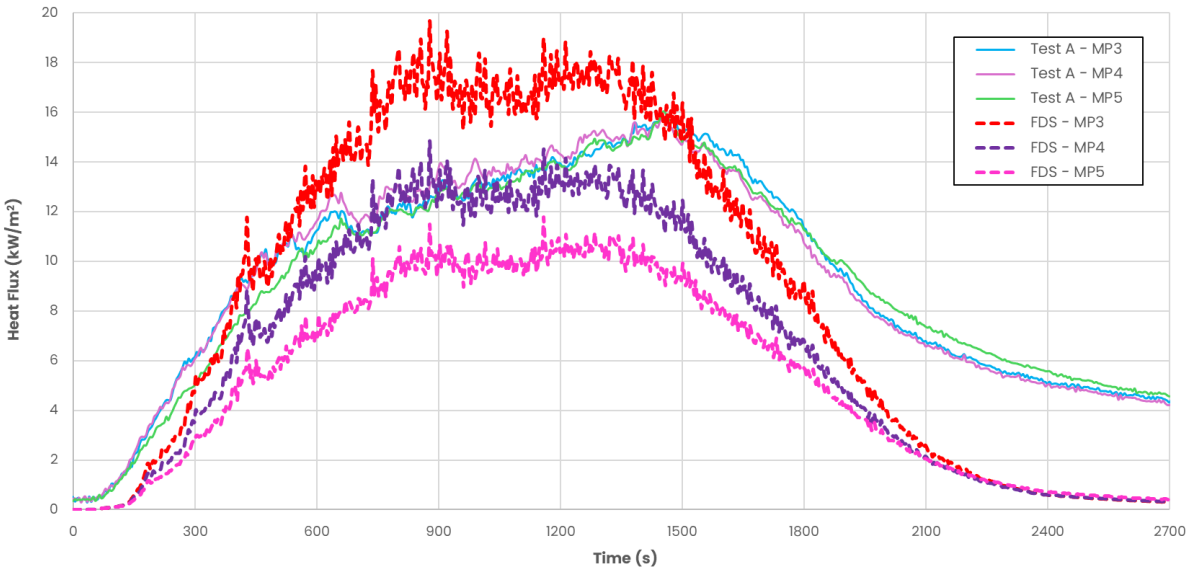

Figure C5-30 Radiant heat flux on the facade wall behind Balcony 1

In Figure C5-29, the results demonstrate that the FDS model closely aligns with Test A data during the initial stage of fire growth (up to around 500 s), by showing a consistent temperature increase. However, the FDS results begin to overestimate temperatures compared to Test A beyond this period, with peak values in the FDS model reaching around 400 °C, compared to approximately 300 °C in Test A data. Both datasets gradually decrease after reaching peak temperatures and begin to converge around 2400 s, where the temperature values become more aligned.

Figure C5-30 shows the heat flux measurements, with all three devices (MP3, MP4, MP5) in Test A peaking around 16 kW/m^2. In contrast, the FDS results vary more widely, with peak values ranging from 10 kW/m^2 to a maximum of 20 kW/m^2. Both datasets display a similar increase in heat flux at the beginning. However, the FDS model shows a more rapid decline after 1800 s.

C5-3.3.9 Exposed edge of Balcony 1 floor

This section presents the temperature and heat flux measurements at the exposed edge of the balcony at the edge the floor of Balcony 1 using Inconel thermocouples (TCs) and radiometer. The TC and heat flux devices, labelled as MT6 and MP6, respectively. There are positioned horizontally at the exposed edge of the balcony on the floor of Balcony 1. The location of these devices is shown indicatively in Figure C5-31.

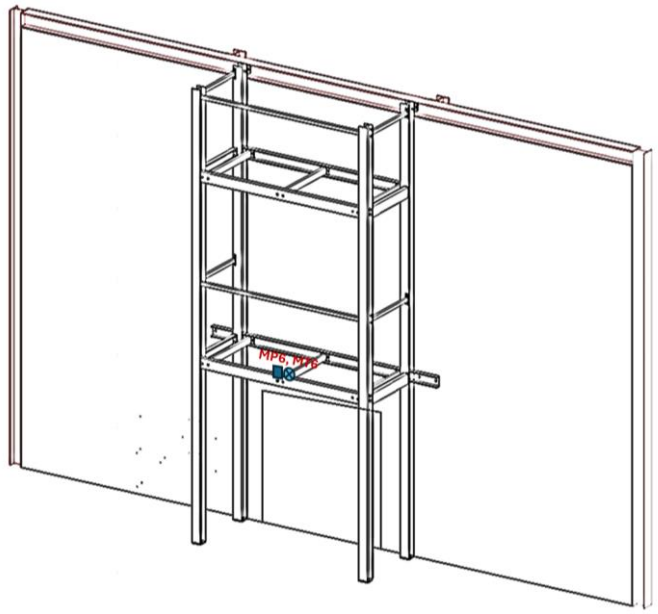

Figure C5-31 Measurement devices at the exposed edge of Balcony 1

The graphs plotted in Figure C5-32 and Figure C5-33 show the temperature and heat flux measurements taken from the devices positioned at the balcony exposed edge.

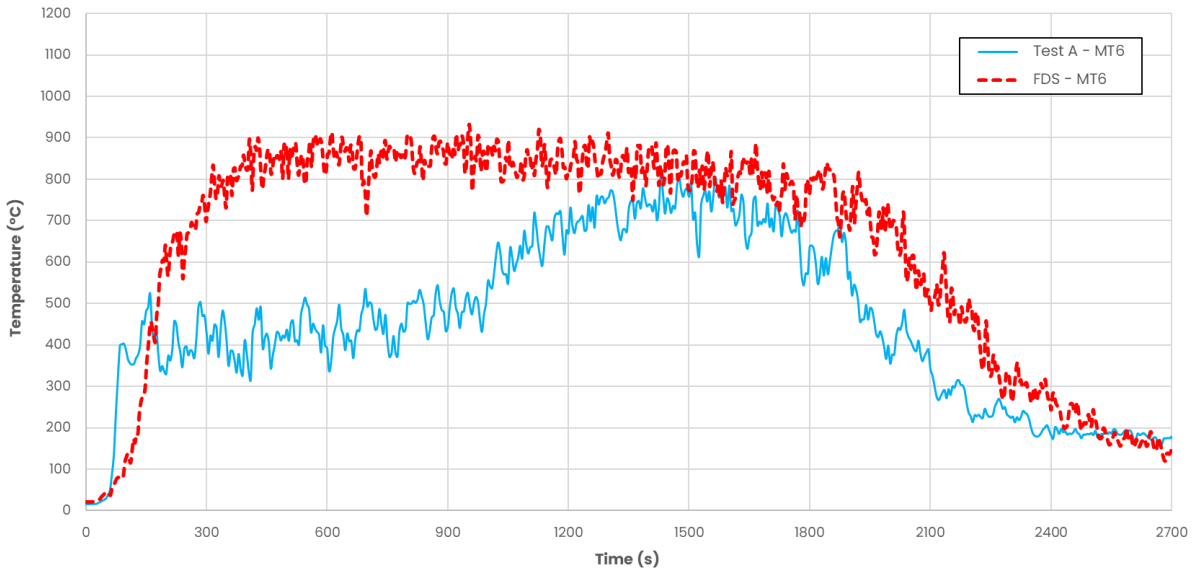

Figure C5-32 Temperature of the TC at the exposed edge of Balcony 1

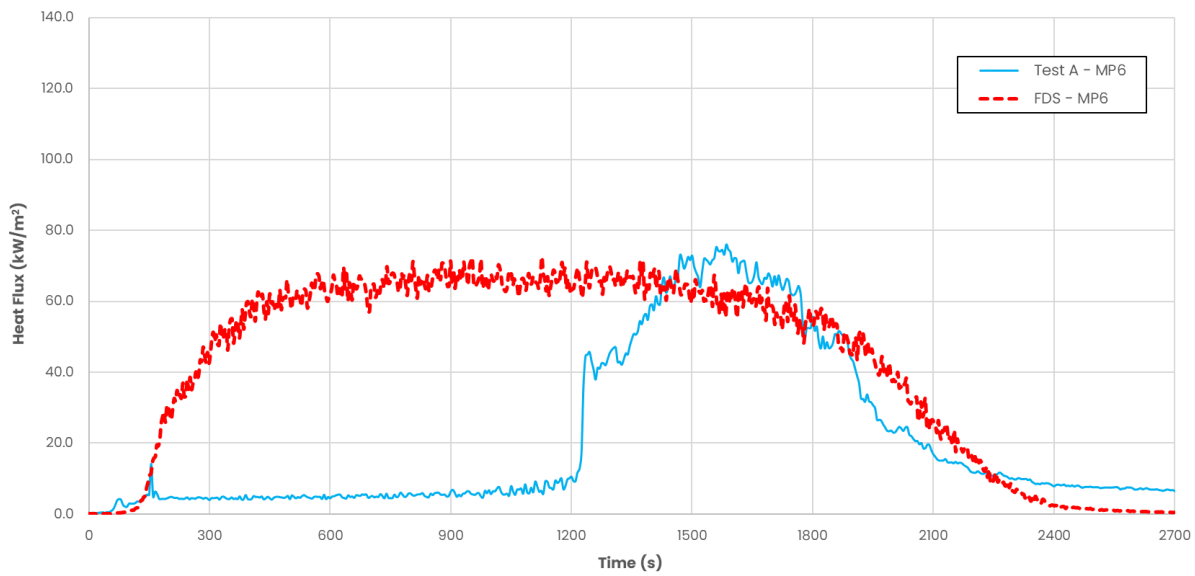

Figure C5-33 Radiant heat flux at the exposed edge of Balcony 1

In Figure C5-32, the temperature data for the Inconel TC at the exposed edge shows that the Test A values are slightly lower than the FDS data, with a peak value of approximately 750 °C for Test A and 900 °C for the FDS model. The FDS data displays a gradual temperature increase from the start, whereas the Test A data only begins to rise sharply after about 1200 s.

Figure C5-33 shows a similar discrepancy pattern, suggesting that there may have been an issue with the test measurements up until 1200 s. However, the maximum heat flux for the FDS simulation is around 70 kW/m^2, closely aligning with the peak values observed in Test A.

C5-3.3.10 Underneath Balcony 2 floor

This section presents the temperature and radiant heat flux measurements underneath Balcony 2 using Inconel thermocouples (TCs) and radiometer. The TCs, labelled as UT3 and UT4, and heat flux, labelled as UP3 and UP4, are positioned horizontally beneath the balcony structure. The first set of devices (UP3/UT3) is located 450 mm away from the facade wall, with the next set (UP4/UT4) positioned an additional 450 mm away from the first device. The location of these devices is shown indicatively in Figure C5-34.

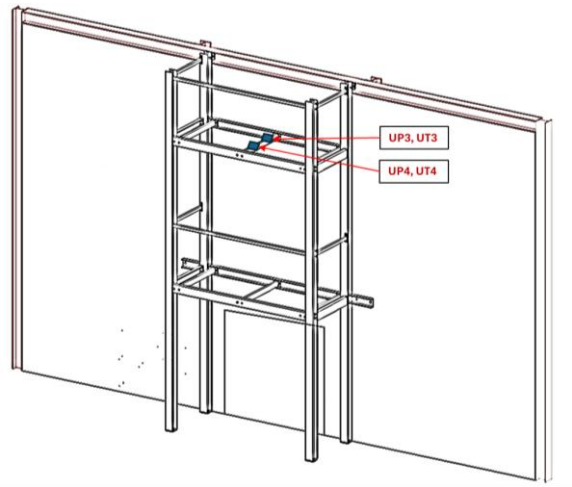

Figure C5-34 Measurement devices underneath the second-floor balcony

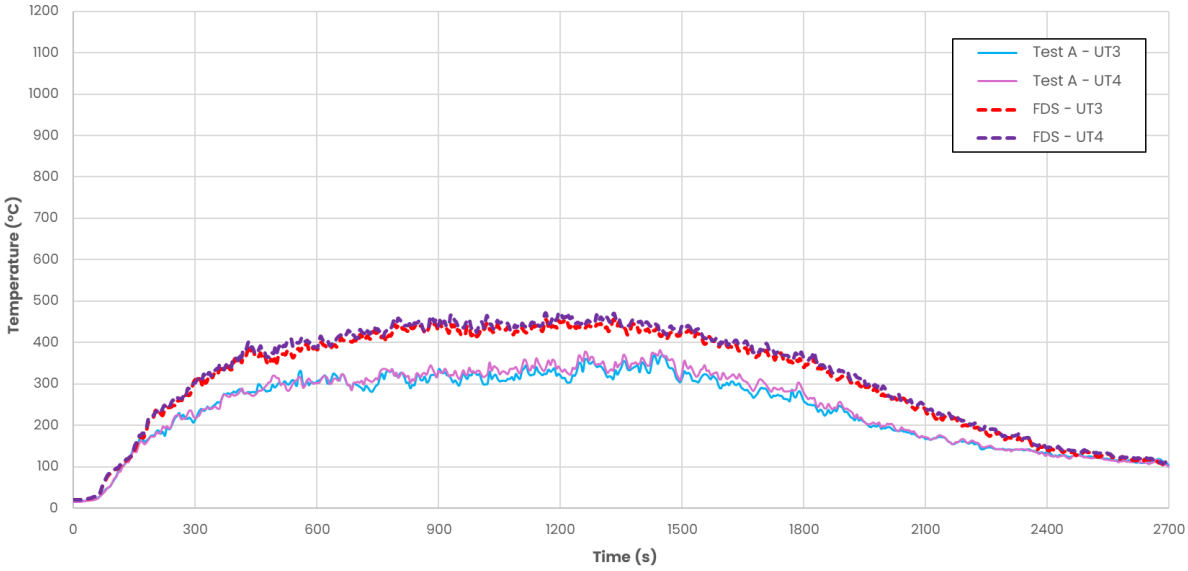

Figure C5-35 Temperature of the TC underneath Balcony 2

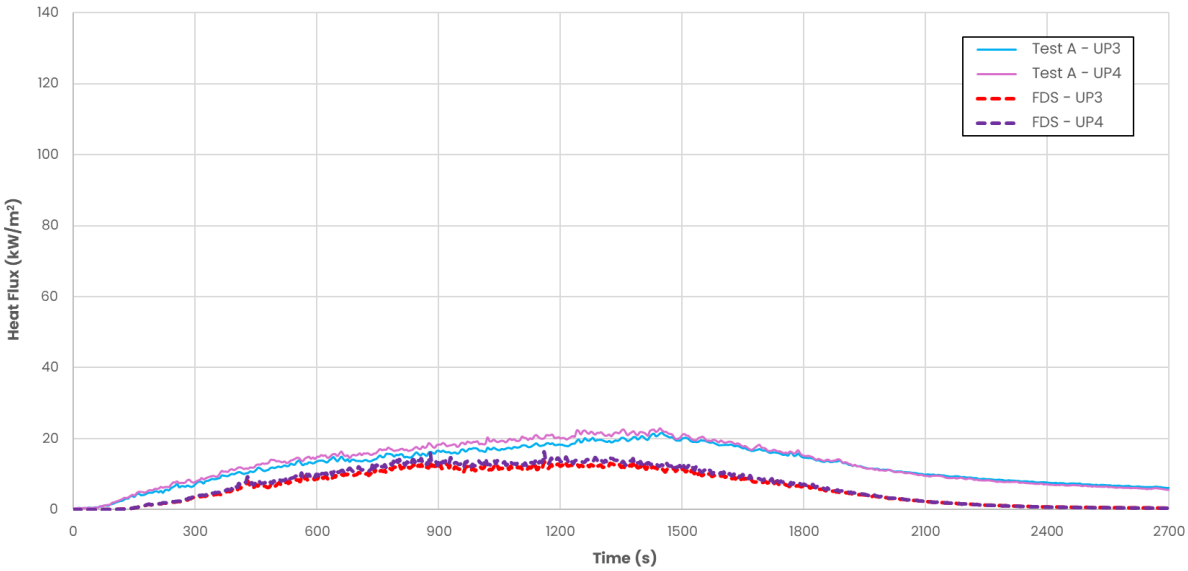

Figure C5-36 Radiant heat flux underneath Balcony 2

Figure C5-35 and Figure C5-36 show the temperature and heat flux measurements taken from Inconel thermocouples (TC) and radiometers positioned underneath Balcony 2. In Figure C5-35, the results show for the Inconel TCs underneath Balcony 2 for Test A peaks at approximately 450 °C, while the FDS simulations show a slightly lower peak of around 350 °C. Both datasets display a similar profile, although the FDS data tends to be slightly higher than the Test A data overall.

Figure C5-36 presents the radiant heat flux measurements, with the Test A data peaking around 20 kW/m^2, while the FDS results reach a slightly lower peak of about 15 kW/m^2, indicating a slight underestimation compared to the test results. Additionally, the heat flux in the FDS data begins to decline earlier than in the Test A data.

C5-3.3.11 Side wall at Balcony 2 railing level

This section presents the temperature and radiant heat flux measurement on the side wall at Balcony 2 railing level using an Inconel thermocouple (TCs) and radiometer in the CFD modelling. The TC is labelled as TT1, and the heat flux device, labelled as TP1, are positioned 900 mm above the second-floor slab and 900 mm horizontally away from the steel frame of the balcony. The locations of these devices are shown in Figure C5-37.

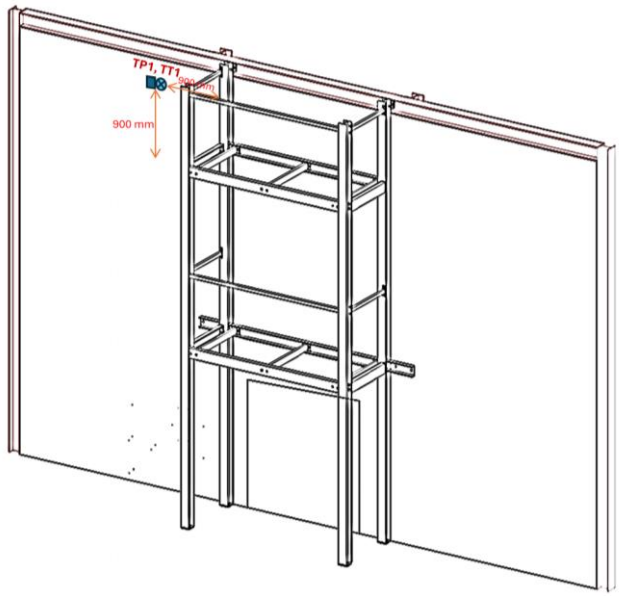

Figure C5-37 Measurement devices on the side wall on second floor

Figure C5-38 and Figure C5-39 show temperature and heat flux measurement taken from the measuring devices placed at Balcony 2 railing level.

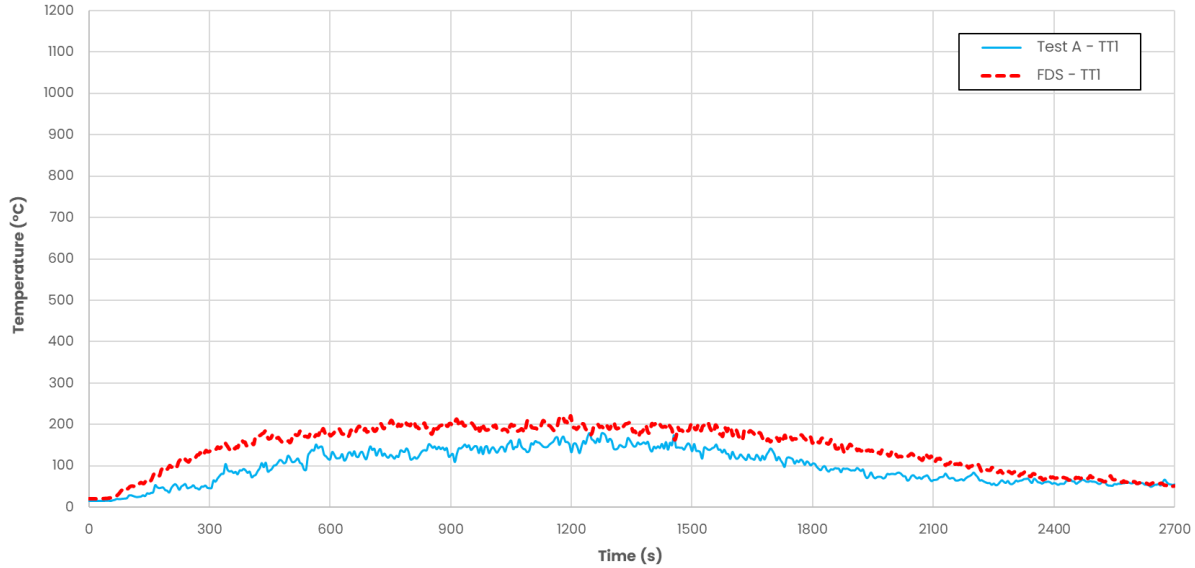

Figure C5-38 Temperature of the side wall TC at Balcony 2 railing level

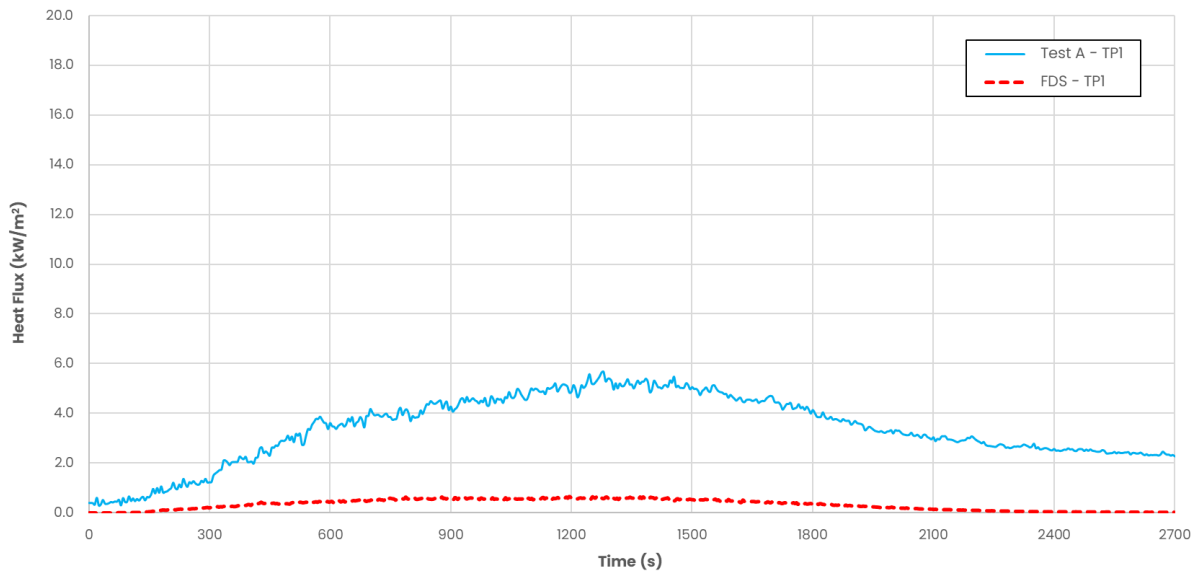

Figure C5-39 Radiant heat flux on the side wall at Balcony 2 railing level

In Figure C5-38, the maximum temperature recorded for Test A and the FDS simulation from the Inconel TC on the side wall shows minimal difference. The FDS model slightly overestimates with a peak value of about 200°C, while the Test A data peaks around 150 °C. Both datasets display a similar profile from the growth phase to the decline, with minimal deviation. In contrast, the radiant heat flux shown in Figure C5-39 indicates that the Test A data peaks at around 5 kW/m^2, whereas the FDS results remain below 0.5 kW/m^2, showing a significantly lower value than the test results. This result indicated that the FDS model underestimates the radiant heat flux, suggesting a need for further calibration of the FDS model to more accurately match the test values.

C5-3.3.12 Balcony 2 handrail

This section presents the temperature and heat flux measurements at the Balcony 2 handrail using an Inconel thermocouple (TC) and radiometer for the CFD modelling. The TC, labelled as TT2, and the heat flux, labelled as TP2, are positioned at the front

of the Balcony 2 handrail. The location of these devices is shown indicatively in Figure C5-40.

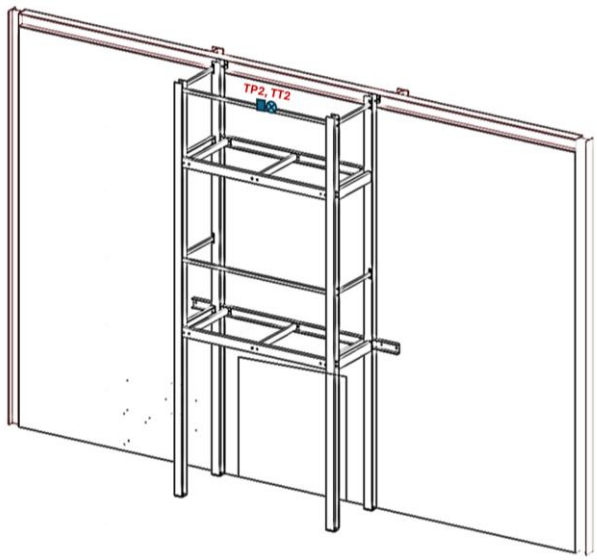

Figure C5-40 Measurement devices at Balcony 2 handrail

Figure C5-41 and Figure C5-42 show temperature and heat flux measurements taken from the measurement devices placed at the side wall of Balcony 2.

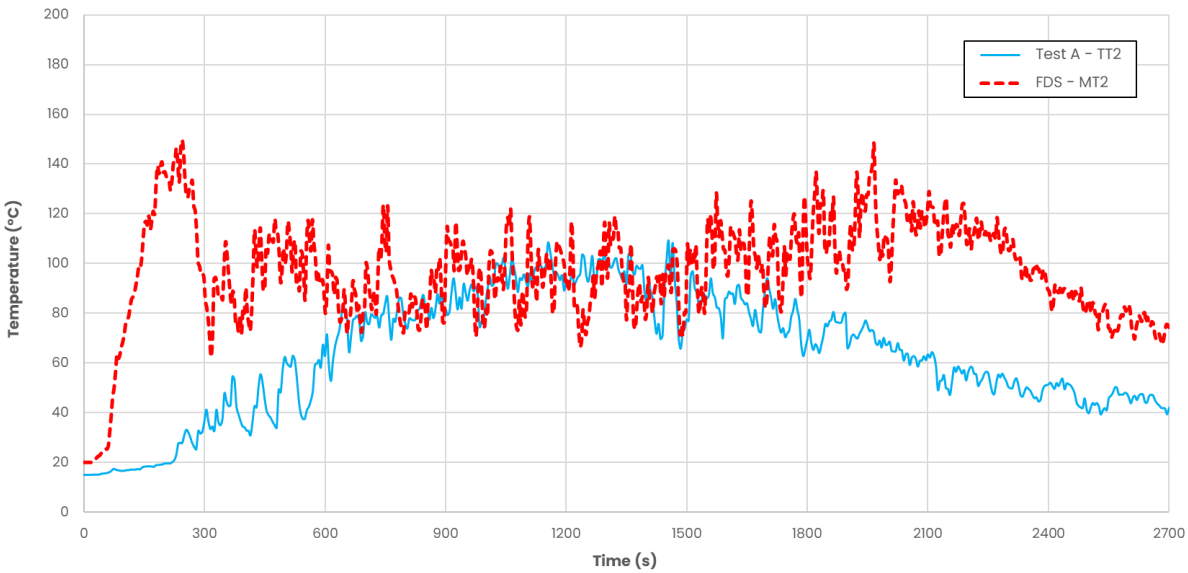

Figure C5-41 Temperature of the TC at Balcony 2 handrail

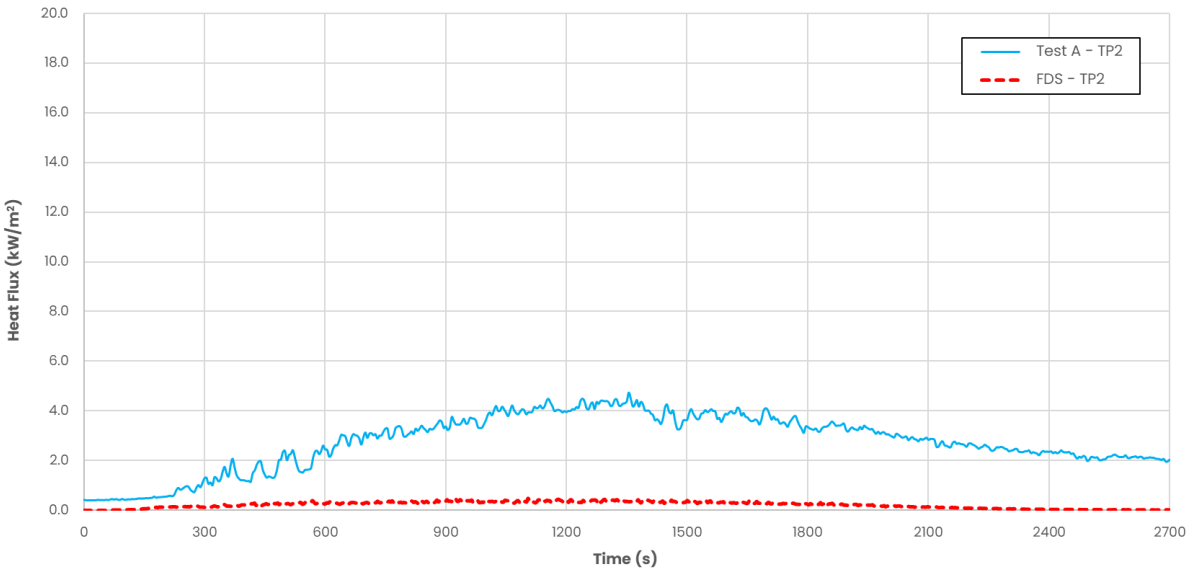

Figure C5-42 Radiant heat flux at Balcony 2 handrail

In Figure C5-41, the temperature measurements from the Inconel TC at the Balcony 2 handrail show significant discrepancies between Test A and the FDS simulation. The FDS model consistently overestimates the temperature, with peaks fluctuating around 140 °C, while the Test A data remains lower, peaking around 100 °C. Both datasets exhibit an initial temperature rise, however, the FDS model shows more pronounced fluctuations throughout the measurement period. Figure C5-42 highlights a substantial difference in radiant heat flux measurements between Test A and the FDS simulation. Test A data shows a gradual increase in radiant heat flux, peaking at around 4 kW/m^2 and maintaining relatively stable values. In contrast, the FDS model significantly underestimates the radiant heat flux, with values remaining below 1 kW/m^2 throughout the period.

C5-3.3.13 Wall behind Balcony 2 level

This section presents the temperature and radiant heat flux measurements on the facade wall of the second-floor level using an Inconel thermocouple (TC) and radiometer for the CFD modelling. The TC, labelled as TT3, and the heat flux device, labelled as TP3, are positioned 900 mm above the floor of Balcony 2 mounted on the facade wall. The locations of these devices are shown indicatively in Figure C5-43.

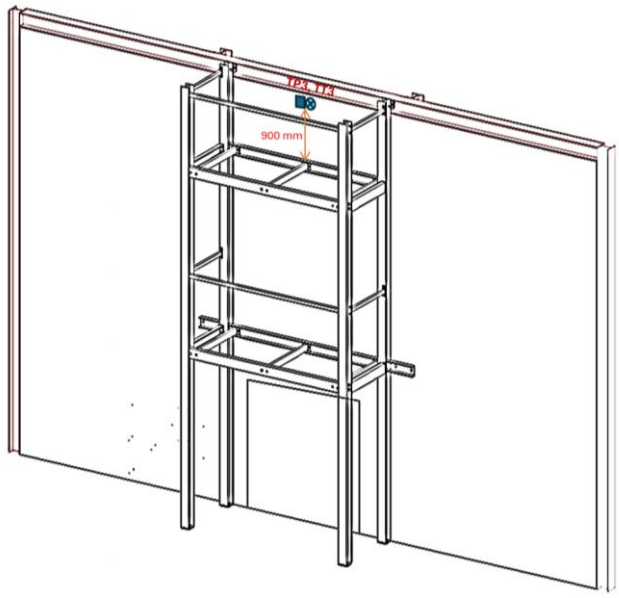

Figure C5-43 Measurement devices on the facade wall behind Balcony 2

Figure C5-44 and Figure C5-45 show the temperature and heat flux data taken from the measurement devices placed on the facade wall behind Balcony 2.

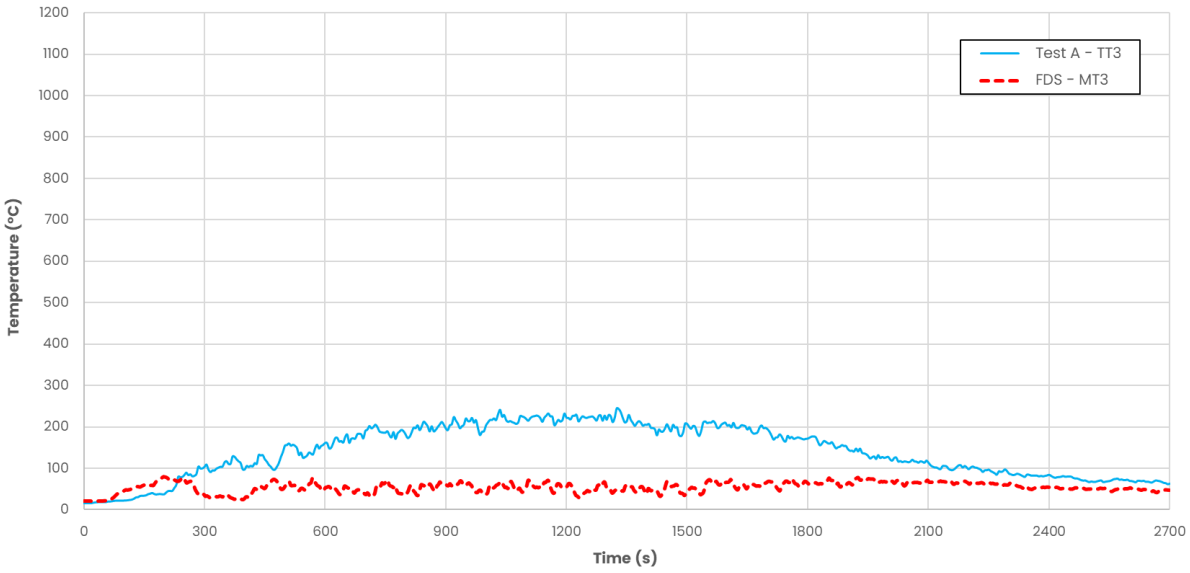

Figure C5-44 Temperature of the TC on the facade wall behind Balcony 2

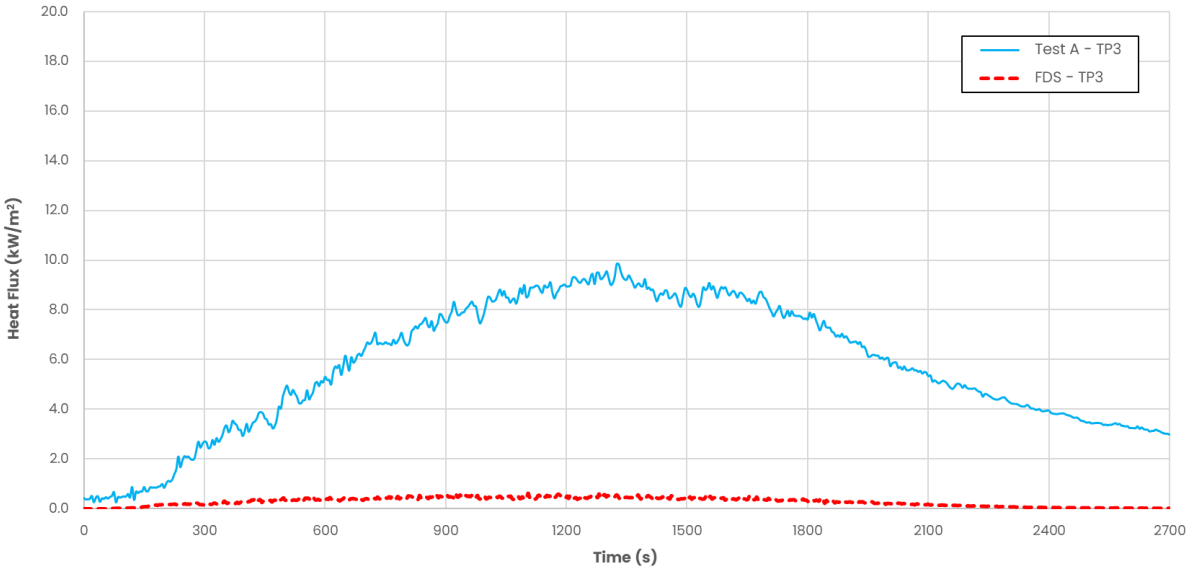

Figure C5-45 Radiant heat flux on the facade wall behind Balcony 2

Based on the observations from both graphs, there are clear discrepancies between the data for the Test A and FDS simulation for temperature and heat flux measurements. In Figure C5-44, the temperature measured in Test A achieved a maximum temperature of approximately 200 °C, while the FDS model underestimates this value, reaching only around 90 °C. Similarly, in Figure C5-45, the results highlight a substantial difference in radiant heat flux measurements, with Test A values peaking at around 9 kW/m^2, while the FDS results remain below 0.5 kW/m^2.

C5-3.3.14 Exposed edge of Balcony 2

This section presents the temperature and heat flux measurements at the exposed edge of Balcony 2 using an Inconel thermocouple (TC) and radiometer for the CFD modelling. The TC, labelled as TT4, and the heat flux device, labelled as TP4, are placed horizontally at the exposed edge of Balcony 2. The location of these devices is shown in Figure C5-46.

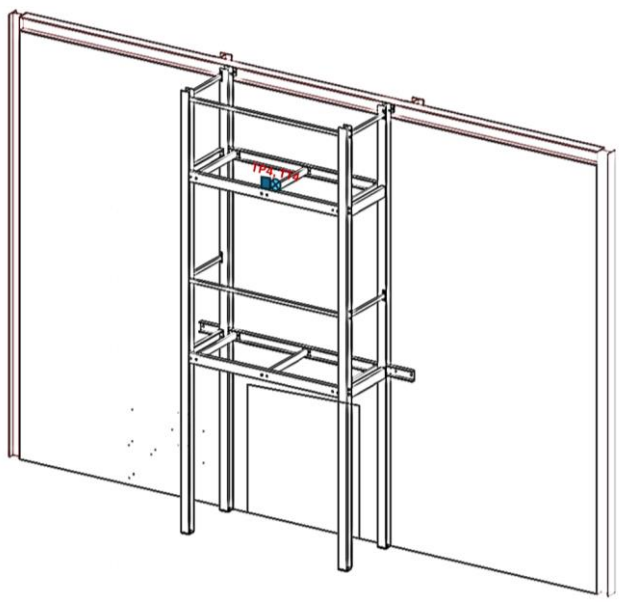

Figure C5-46 Measurement devices at the exposed edge of Balcony 2

Figure C5-47 and Figure C5-48 show the temperature and radiant heat flux data measured from the devices positioned at the exposed edge of Balcony 2.

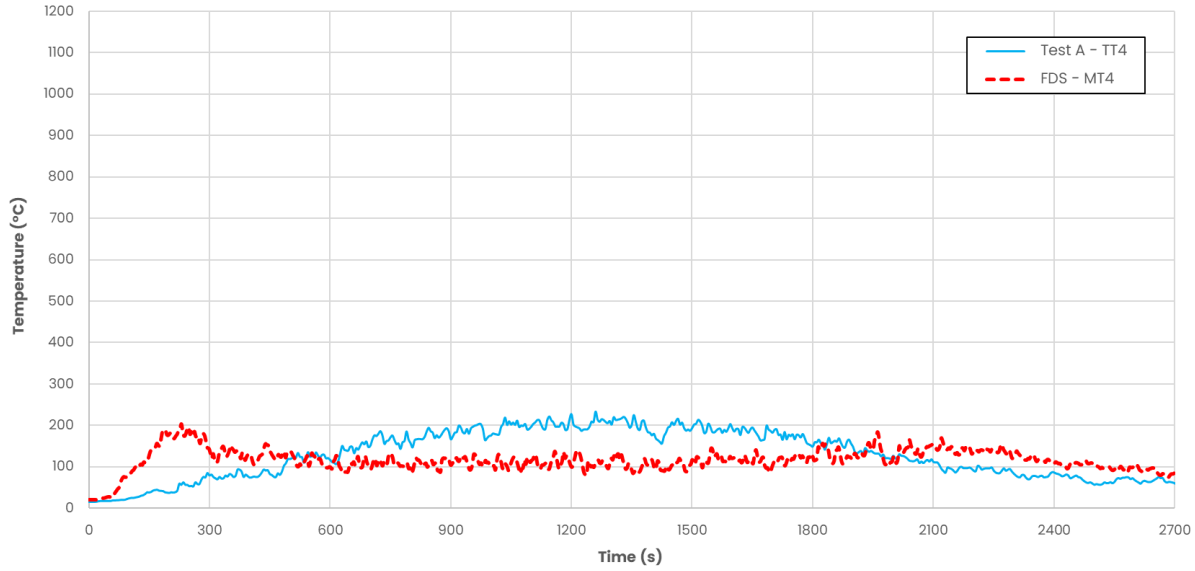

Figure C5-47 Temperature of the TC at the exposed edge of Balcony 2

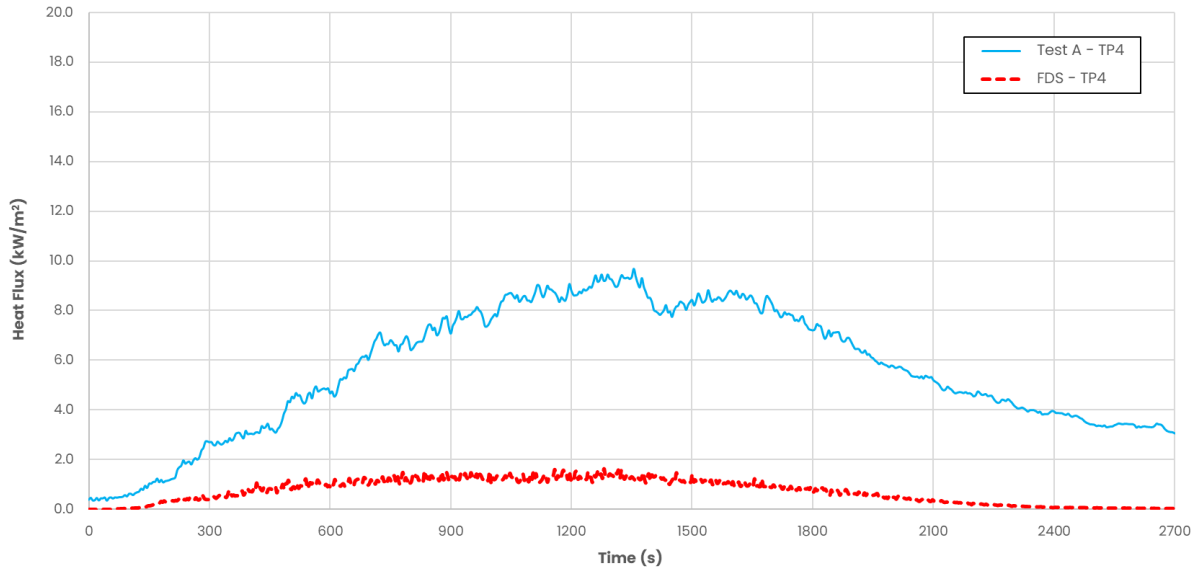

Figure C5-48 Radiant heat flux at the exposed edge of Balcony 2

In Figure C5-47, the temperature measurements from the Inconel TC at the exposed edge of Balcony 2 show that Test A consistently records higher temperatures than the FDS simulation. The FDS data exhibits a rapid temperature increase before 300 s, reaching a maximum value of around 100 °C, while Test A rises more gradually to a higher peak of approximately 200 °C. This initial rapid increase in the FDS model is followed by an underestimation of temperature throughout the rest of the observation period. In addition, the radiant heat flux shown in Figure C5-48 indicates a significant difference, with Test A peaking around 10 kW/m^2 compared to less than 2 kW/m^2 in the FDS results. These differences indicate the FDS model underestimates the magnitude of both parameters, therefore, a further calibration is needed to improve the model's predictive accuracy.

C5-3.4 Summary

The study systematically analysed the temperature and radiant heat flux responses for Test A of the series balcony fire tests by comparing the test measurements with the results from numerical simulations using Fire Dynamics Simulator (FDS). The objective has been to assess the ability of FDS to predicting the fire dynamics and thermal condition associated with the balcony fire. The comparison between the test results and FDS simulations revealed several key discrepancies, highlighting areas where the simulations performed well and others where improvement is needed.

In the case of Inconel thermocouples, some of the FDS results generally captured the overall temperature trends, but there were some instances where the simulations either overestimated or underestimated the peak temperatures and profiles. A similar pattern is observed with the heat flux measurements, where the FDS simulation results slightly overestimated or underestimated peak heat flux values, particularly when the devices were measured near the wood crib (fire source) region. However, when the heat fluxes were measured more remote from the fire, FDS shows a significant underprediction when compared to the Test A values.

The observed discrepancies indicates that the current FDS setup may not fully capture the fire dynamics and heat transfer mechanisms. The underprediction of heat flux values observed, in particular, indicate that further refinement of the CFD input parameters may be required. Addressing these limitations may lead to an improvement in its predictive capability, making it a more effective tool in representing real balcony fires.

C5-4. Conclusions and future work

This preliminary study highlights the challenges and implications of simulating a relatively simple balcony fire scenario using Fire Dynamics Simulator (FDS). While the simulations adequately represented certain aspects, such as the heat release rate (HRR), the comparative analysis between the test measurements and simulated data revealed several discrepancies in gas temperature and heat flux predictions. These differences suggest that the current FDS configuration may not fully capture the fire dynamics and heat transfer mechanisms inherent to the test.

Future work should focus on refining the FDS input parameters, for example:

- The sensitivity of the mesh resolution should be examined in greater detail. While balancing the computational efficiency with precision is essential, utilising finer mesh resolutions, especially in areas with high thermal gradients, may provide more detailed insights.
- Conduct additional sensitivity analyses for the thermocouple devices by adjusting their emissivity values. Since the emissivity of thermocouples could impact temperature readings, exploring variations in these values would help refine the thermal response.
- To conduct sensitivity analyses for the thermal boundary conditions, specifically focusing on parameters such as surface temperature and temperature ramp-up time. Adjusting these values may impact the predicted thermal response and flame behaviour, especially in areas where temperature distribution is critical.
- To perform sensitivity analyses for the radiation input parameters, such as adjustments to the path length, angle increment, number of solid and polar angles, and assumed radiative source temperature. Changes in these parameters might influence heat transfer calculations and the overall thermal radiation behaviour in the simulation. By exploring the impact of these adjustments, the accuracy of the FDS's representation of radiative heat transfer may be improved, helping to ensure that the simulation better reflects the actual test conditions.

By addressing these areas, future research can contribute to the continuous improvement of the FDS simulation of balcony fire Test A. On the assumption that an acceptable match between this test and the FDS output is achieved, the study can examine the other seven balcony fire tests.

C5-5. References

[1] S. Bryant, I. Rickard, and M. Spearpoint, ‘A survey of fire loads on private residential balconies in England’, *Fire Technology*, vol. 59, pp. 3415–3443, Jul. 2023, doi: 10.1007/s10694-023-01467-8.

[2] K. McGrattan, S. Hostikka, R. McDermott, J. Floyd, and M. Vanella, ‘Fire Dynamics Simulator user’s guide’, National Institute of Standards and Technology, Gaithersburg, MD, NIST SP 1019, 2019. doi: 10.6028/NIST.SP.1019.

[3] K. McGrattan, ‘Verification and Validation of Selected Fire Models for Nuclear Power Plant Applications, Volume 7: Fire Dynamics Simulator’, U.S. Nuclear Regulatory Commission Office of Nuclear Regulatory Research, NUREG-1824, May 2007. Accessed: Sep. 16, 2019. [Online]. Available: https://www.nrc.gov/reading-rm/doc-collections/nuregs/staff/sr1824/v7/

[4] X. Dai *et al.*, ‘An engineering CFD model for fire spread on wood cribs for travelling fires’, *Advances in Engineering Software*, vol. 173, p. 103213, 2022.

[5] R. Kallada Janardhan and S. Hostikka, ‘Predictive Computational Fluid Dynamics Simulation of Fire Spread on Wood Cribs’, *Fire Technology*, 2019, doi: https://doi.org/10.1007/s10694-019-00855-3.

[6] BSI, ‘BS 8414-1:2020 Fire performance of external cladding systems. Part 1: Test methods for non-loadbearing external cladding systems fixed to, and supported by, a masonry substrate’, BSI, London, 2020.

[7] D. Hopkin, T. Lennon, J. El-Rimawi, and V. Silberschmidt, ‘A numerical study of gypsum plasterboard behaviour under standard and natural fire conditions’, *Fire and Materials*, vol. 36, no. 2, pp. 107–126, 2012, doi: 10.1002/fam.1092.

[8] BSI, ‘DD ENV 1992-1-2:1996 Eurocode 2. Design of concrete structures. General rules. Structural fire design (together with United Kingdom National Application Document)’, BSI, London, 1996.

[9] A. Häggkvist, J. Sjöström, and U. Wickström, ‘Using plate thermometer measurements to calculate incident heat radiation’, *Journal of Fire Sciences*, vol. 31, no. 2, pp. 166–177, Mar. 2013, doi: 10.1177/0734904112459264.

APPENDIX C6:
Spandrel zone demonstration test methodology

Authors: A Law[1], A Farrelly-Waters[2], M Spearpoint[2]

Reviewers: J Torero[3], M Rapenne[4]

[1]University of Edinburgh, [2]OFR, [3]UCL, [4]Efectis

Contents

C6-1. Introduction 1
C6-2. Methodology 3
C6-2.1 The fire 3
C6-2.2 Test configuration 3
C6-2.2.1 LEPIR II 4
C6-2.2.2 Redesign options 5
C6-2.3 Instrumentation 8
C6-2.4 Key challenges 9
C6-2.5 Experimental matrix 10
C6-2.6 Façade configurations 10
C6-2.6.1 Construction typologies 10
C6-2.6.2 Masonry 11
C6-2.6.3 SFS 12
C6-2.6.4 Glazed curtain walling 13
C6-3. Next steps 15
C6-4. References 15
Appendix I 16

Figures

Figure C6-1 LEPIR II rig 4
Figure C6-2 LEPIR II rig dimensions [3] with proposed indicative changes: (a) front elevation; (b) side elevation; (c) plan 8
Figure C6 3 Proposed experimental arrangement 9
Figure C6-4 Diagram 5.3 from ADB Vol. 1 11
Figure C6-5 SFS indicative vertical section 12
Figure C6-6 Glazed curtain walling indicative vertical section 14

Tables

Table C6-1 Masonry indicative build-up 11
Table C6-2 SFS indicative build-up 13

C6-1. Introduction

From the review and analysis carried out in **Appendix A/B**, the implicit (and sometimes explicit) role of the spandrel zone is to delay and potentially prevent the spread of fire between storeys. Some jurisdictions suggest that a fire resisting spandrel wall or slab projection can perform this function, while others appear to see little value in these precautions.

There does not appear to be any quantitative definition of the delay that is perceived to be adequate, but previous authors have drawn a distinction between the 'rapid' fire spread that can be caused by the presence of combustible materials within the external cladding, and the delayed fire spread associated with break-out and break-in of a fire plume. It remains nevertheless unclear what are the target quantitative fire spread rates that will fulfil the requirements of building regulations.

The emphasis of the measures presented in guidance is on ensuring that the 'delay' associated with storey-to-storey fire spread is sufficient in the context of the wider building fire safety strategy. Nevertheless, the term sufficient is for the designer to define and it is not quantitatively stated anywhere. However, a potential contradiction emerges when a stay-put strategy is acceptable and no explicit measures to revoke such a strategy are required. The review found that, while 'stay put' is primarily based around that idea that occupants will remain in their flats, a secondary safety condition is implied if an occupant a) recognises the threat of a spreading fire; b) decides (and is able) to escape; or c) is instructed/aided by the fire service to escape. The quantitative and qualitative meaning of any of these options remains undefined and so is the delay required before penetration to adjacent units occurs. It therefore has to be accepted, that the measures described in the guidance are, in principle, consistent with accepting that storey-to-storey fire spread may occur. It is important to emphasize that nowhere in the provisions of the building regulations there is any expectation of adequate training for the occupants so that they will be capable of recognising a threat that is sufficient to initiate evacuation. Thus, points (a) and (b), while possible, remain undefined.

It is therefore clear that absent from the guidance, and indeed, any of the supporting research is a quantitative assessment of the various parameters of interest. This represents a 'blind spot' with respect to current approaches for meeting the requirements of the building regulations. For example:

- What period of delay might different forms of construction introduce?
    - Which forms of construction better than others?
    - Do some forms of construction fail too early?

- What period of delay is acceptable in the context of individual storeys and a whole building?
    - Is the ‘magic number’ of 15 minutes appropriate, sufficient or based on any real physical phenomenon?
- Are the means of warning for occupants of upper stories adequate?
- Prior to fire spread, what are the acceptable tenability criteria within upper storeys?
- What role do and should the fire and rescue service have in the context of storey-to-storey fire spread?
- Are the fire and rescue service protocols for deployment of response units, response to occupants or firefighting compatible with the capacity of façade systems to contain a fire?

An experimental programme is proposed that will allow quantification of the current ‘policy position’ that is represented within Approved Document B with regard to the delay associated with storey-to-storey fire spread. To address the above questions posed above, it is recommended that:

- The key typologies of construction are defined from which external walls are commonly constructed.
- A set of characteristic testing façade arrangements are agreed.
- A large-scale test programme is undertaken to investigate the delay period and tenability conditions associated with these key typologies – thus allowing the delay periods to be defined.
- Criteria should be defined associated with:
    - The loss of tenability prior to fire spread (e.g. due to unseen spread of combustion products),
    - The breach of an adjacent unit by flames or combustion products; and
    - The need to alert occupants of upper stories.
- The role of the fire and rescue services is assessed and whether fire-fighting provisions are commensurate with this role.

C6-2. Methodology

C6-2.1 The fire

In order to assess the performance of the spandrel zone there are several factors that need consideration, namely:

- A fire condition that represents an adequate solicitation for a façade system needs to be defined.
- This fire condition does not have to be ‘representative’ of any particular fire/fuel load condition but needs to be deemed as a sufficient, well characterized and reproducible fire condition.
- An appropriate translation of the fire condition to real scenarios needs to be possible.
- Gravity fed pans of liquid fuel are an adequate candidate as a source for the fire, nevertheless, these need to be carefully defined and characterized as part of this study.
- Leave the rear of the compartment ‘open’ so that the ventilation can be adjusted to allow for variation of the fire and to be able to build façade systems as required.
- A reference test will have to be conducted to characterize the fire without any failure or contribution of the façade system – i.e. a baseline case.

C6-2.2 Test configuration

To carry out the proposed experimental programme the options are to use an existing (classification) test configuration (with or without modification) or to construct a purpose-built rig. Designing and constructing a rig from scratch has the advantage of likely meeting the research goals more closely than using an existing test configuration but comes at the cost of time and money. It is also possible that a laboratory does not have the floor space to build a new rig and allow it to stand for extended periods while the research is in progress. Clearly the advantage of using an existing configuration is that it is already available and there will likely be some level of experience in its use and past test results. However, using an existing test configuration does often present limitations when addressing specific research goals. These might include the materials, dimensions, fire source, instrumentation, availability of laboratory facilities and so on. One potential candidate would be the BS 8414 [1], [2] test arrangement. However, not only does this not address balconies in any form, but the test is being investigated in detail as part of the EWS project. At this point it would be unwise to select BS 8414 without pre-supposing the outcomes of the EWS findings. If an existing rig is to be adopted to address the research goals, the consortia have converged upon a modification to the LEPIR II format, notwithstanding it also has similar limitations to the BS 8414 rig in its standard configuration.

C6-2.2.1 LEPIR II

An alternative to using the BS 8414 test configuration is to use a modified version of the LEPIR II rig [3] that is used in France in relation to assessing fire spread to upper levels of a multi-storey building via the EWS. The LEPIR II rig is a facility available to the consortium through our testing partner, Efectis (illustrative image in Figure C6-1).

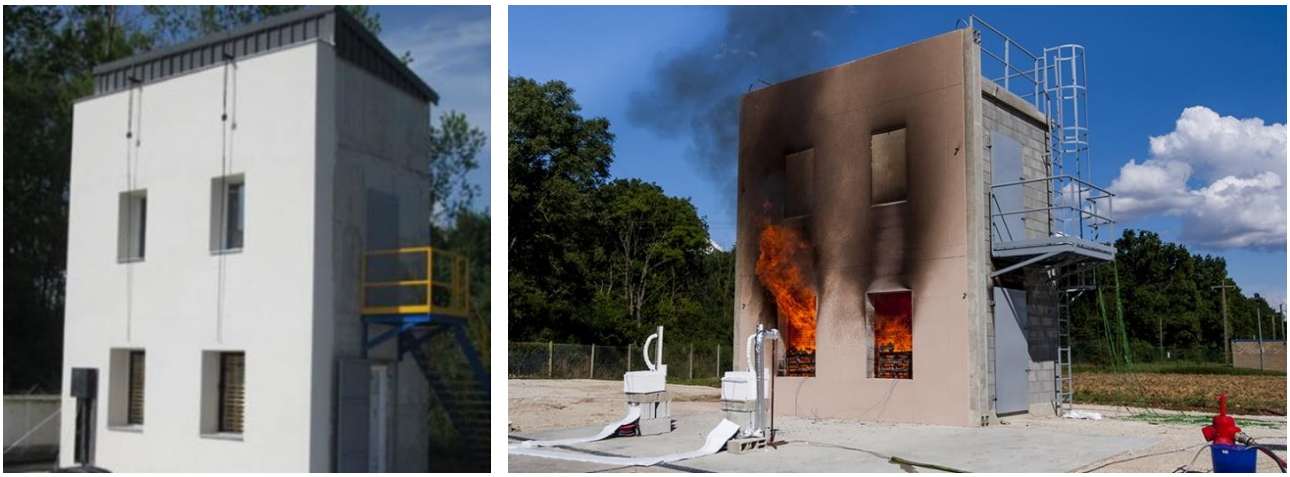

Figure C6-1 LEPIR II rig

The standard test structure consists of two chambers one above the other, constructed from 200 mm thick reinforced concrete giving a flat front face with overall dimensions 4.85 m wide x 7.05 m high. The lower floor fire source enclosure has internal dimensions 4.85 m wide x 2.65 m deep x 2.35 m high. The lower and middle chambers have two openings each which are 1.0 m wide x 1.5 m high (Figure C6-2a-c). The benefits of adopting a modified version of the LEPIR rig for certain aspects of the experimental studies are considered to be:

- The ability to vary the fire hazard within the enclosure and, thus, the manifestation of external flaming / plume. Within the rig's fire enclosure, the fire loading can be readily varied by including larger or smaller cribs for example (or use alternative fire sources as discussed below). The impact of ventilation conditions on external flaming / plume can be readily evaluated by varying the opening size to the fire compartment.
- The option / ability to include articulations of fenestration. Through the inclusion of window openings to the fire compartment both to the simulated floor of origin and above, details relating to window construction, cavity barriers, spandrels and the like.
- The ability to remove the LEPIR external wall and replace with it any number of EWS permutations, including curtain walling, built-up steel framing system or blockwork.
- The ability to attach balconies to a modified version of the rig would provide direct benefits to the research project on this aspect.
- The option to construct a wing wall at one side of the face of the rig to correspond to a similar configuration in the BS 8414 test rig. One (or two) wing walls may also provide some level of wind shielding (see point below).

However, the selection of the rig also has some disadvantages, such as:

- Given the size of the rig and availability of internal laboratory space, the experimental rig will likely have to be constructed outside. This will mean there is the potential that prevailing weather conditions could affect the programme of work and also some measurements It is worth noting that even where experimental work is conducted within an enclosed laboratory wind-driven airflow can still have an impact where large openings are present. Similarly, the temperature within the laboratory will likely be equivalent to the outside ambient temperature as conditioning is impractical in large laboratory spaces. The practicality of having the rig movable will be investigated so that it can be moved into and out of laboratory space, but it likely that this will not be a feasible option. Instead, and where practicable, one solution would be to not carry out experiments on days where the weather is unlikely to have significant influence. An additional option is to investigate the feasibility of creating breaks etc. around the rig to mitigate wind effects.
- The need to construct the rig outside will not limit the option to include a wide range of instrumentation such as thermocouples, heat flux gauges, and gas sampling equipment. However, this will mean that it will not be possible to place the experiments under an extraction hood to allow oxygen consumption calorimetry to be carried out.
- Constructing the modified rig from scratch will incur a cost to the project and a rig of this magnitude is obviously more expensive than a smaller one. Although there is already an existing LEPIR II rig in France it is already used for commercial testing and so the DLUHC projects would have to work around these other demands. Having a dedicated rig allows the DLUHC projects exclusive access and also allows for instrumentation etc. to be retained. Furthermore, the potential need to make repeated modifications to the existing rig and then return it to its standard configuration would likely incur more cost to the project than simply building a new one.

C6-2.2.2 Redesign options

- Make the windows into a single open elevation that can then be temporarily in-filled as required. The opening would extend to the storey-level floor so that door-sized openings could be represented. This configuration would support the need to construct a representative curtain wall system. The opening configuration would also allow the rig to be arranged to allow for the assessment of structural steel frame (SSF) EWS systems (similar to BS 8414-2).
- Make the ground floor compartment larger to represent a more realistic room. However, given the likely structural elements needed to support the upper parts of the rig it would be more practical to increase the whole rig footprint. The larger compartment/s will allow for the spaces to be sub-divided to represent neighbouring enclosures such as a lobby area, a corridor stub without having the enclosure footprints being unduly small..
- The choice of fire source is subject to several advantages and disadvantages related to repeatability, maximum achievable heat release rate, fire development, etc. and it

is beyond the scope of this document to provide a detailed discussion. As an alternative to using cribs, the setup should incorporate a liquid fuel fire arrangement to the ground floor compartment that can use different size pans. Consideration should be made to have the pans mounted in a water bath. Liquid pool fires provide a means to specify the fire severity in a defined, repeatable (canonical) manner.

- Make any changes to the rig to allow for the attachment of balconies at two (or three) levels.

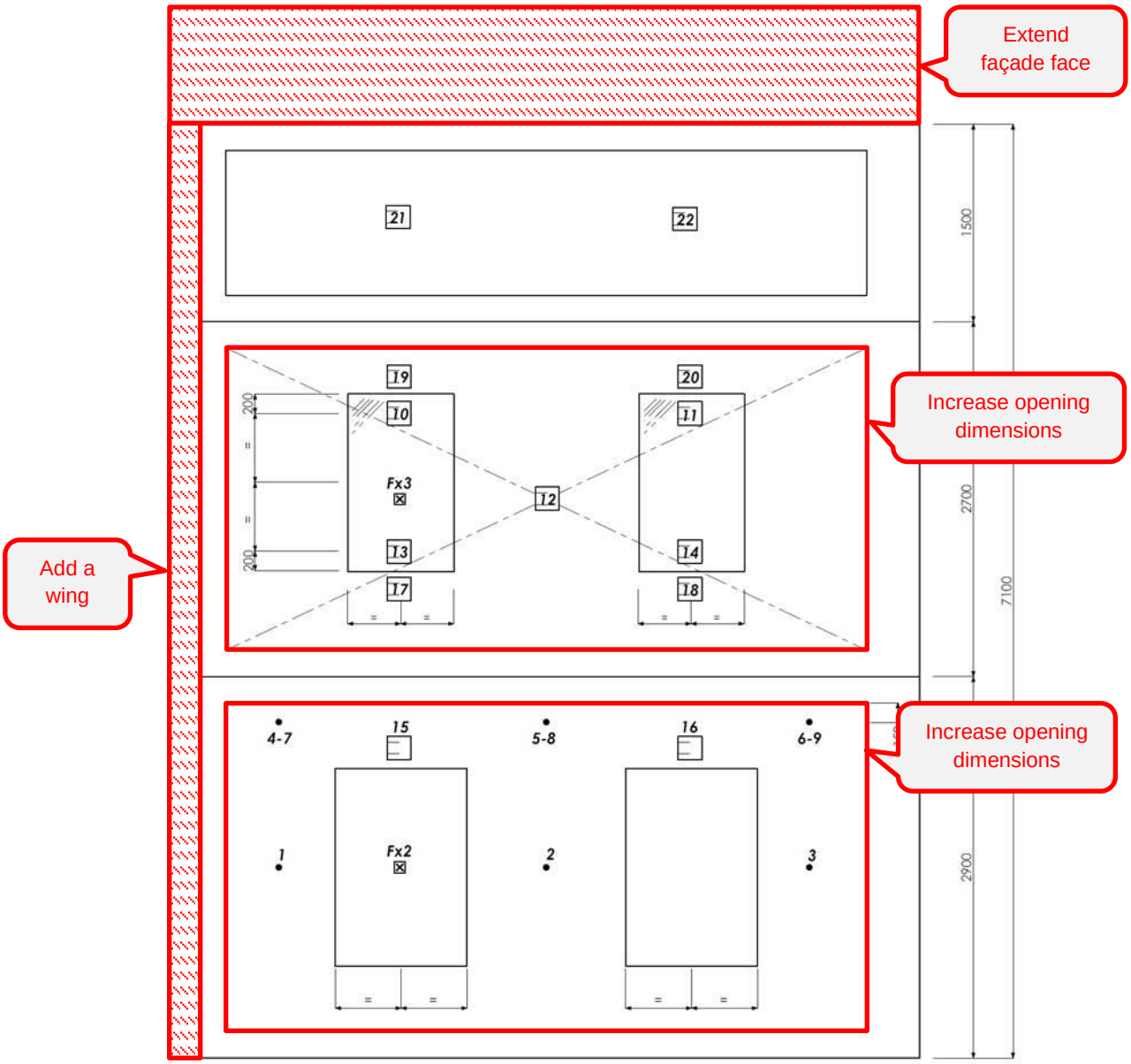

(a)

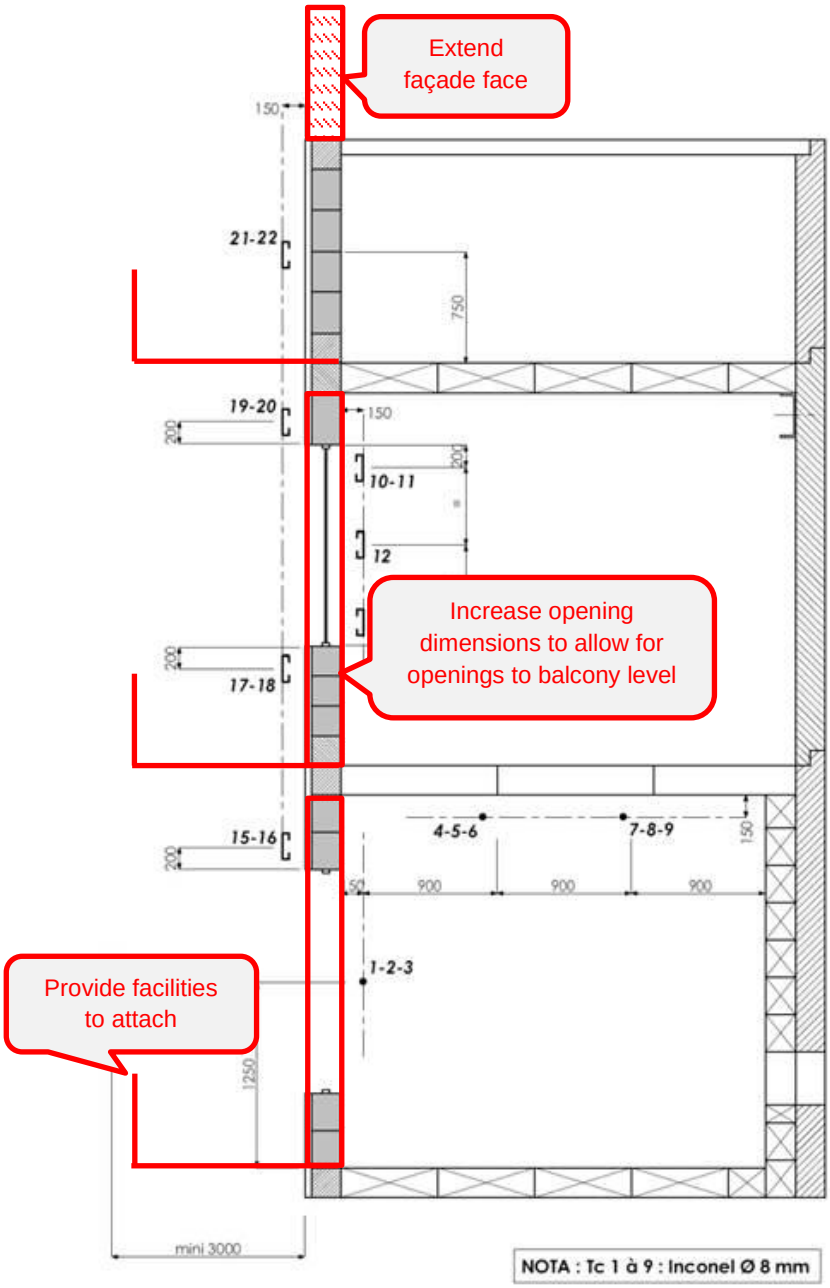
Extend façade face
Increase opening dimensions to allow for openings to balcony level
Provide facilities to attach
21-22
19-20
10-11
12
17-18
15-16
4-5-6
7-8-9
1-2-3
150
750
200
900
1250
mini 3000
NOTA : Tc 1 à 9 : Inconel Ø 8 mm

(b)

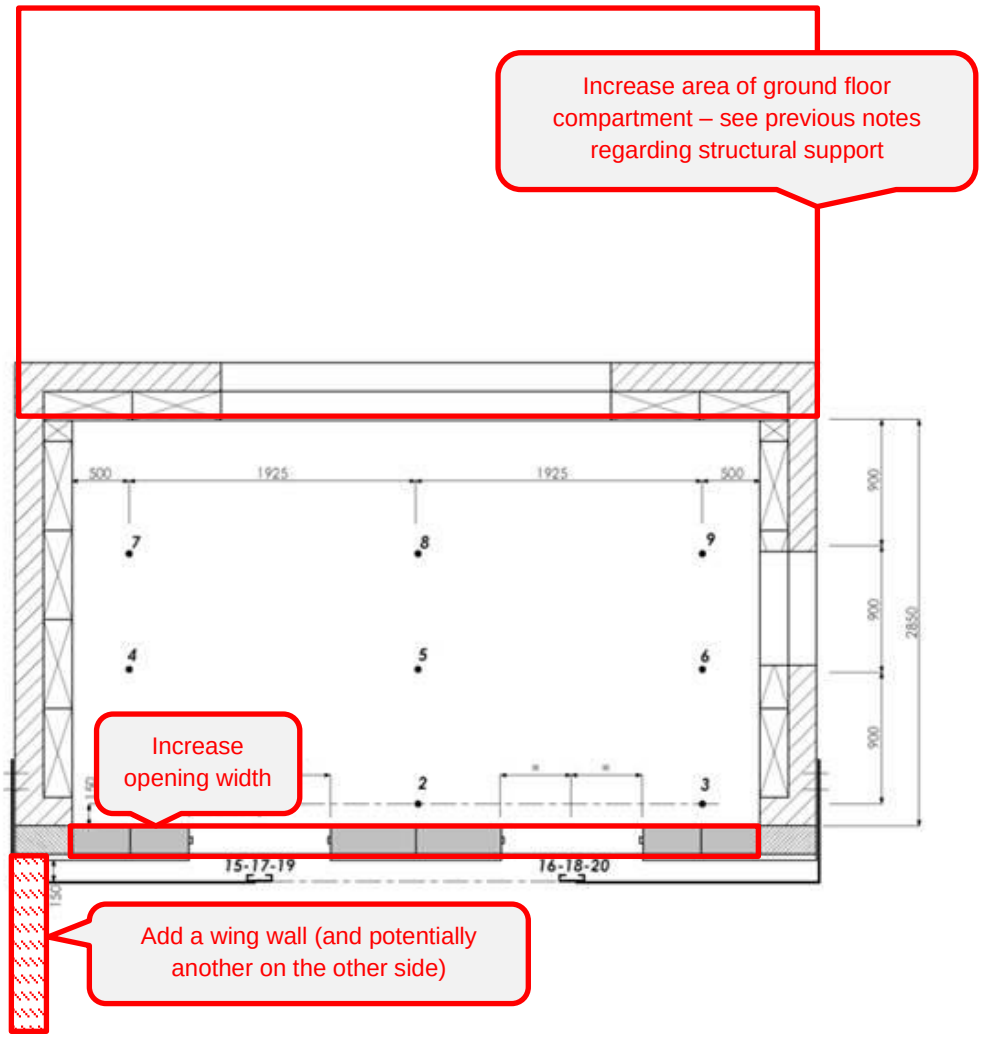

(c)

Figure C6-2 LEPIR II rig dimensions [3] with proposed indicative changes: (a) front elevation; (b) side elevation; (c) plan

C6-2.3 Instrumentation

A detailed instrumentation plan will be developed once an agreement has been reached by the stakeholders involved in the project that the proposed methodology is the appropriate approach. However, an indicative list is provided below:

- Plume temperatures.
- In-depth temperature measurements on all elements deemed relevance to the system behaviour.
- Heat fluxes and temperature measurements in the fire compartment (and selected locations in the compartment above) sufficient to characterize thermal solicitation to the structure as well as room conditions.

- Heat fluxes on façade and within compartments above.
- Outward heat fluxes to characterize fire spread.
- Side and front cameras to characterize fire spread/flame height.
- Gas sampling and obscuration measurements in fire compartment and compartment above.
- Cameras on fire compartment and compartment above (and monitoring for breach of the side).
- Consider instrumentation for heat release rate, first to characterize the fire and during the tests with façade systems to characterize the evolution of the breach.

C6-2.4 Key challenges

A significant challenge with attempting to test how typical cladding system performs is to create a test where there can be adequate control of the fire development and also that the cladding system is sufficiently representative of a real cladding system. Specifically, these issues are of relevance to how the fire 'breaks out' of the lower compartment.

It is proposed to create the fire compartment in such a way that there is an opening at the rear that allows rapid transition to flashover (Figure C-3). This will allow the initial thermal attack to be well controlled. Once failure of the façade occurs, the thermal conditions will vary according to the manner of the failure.

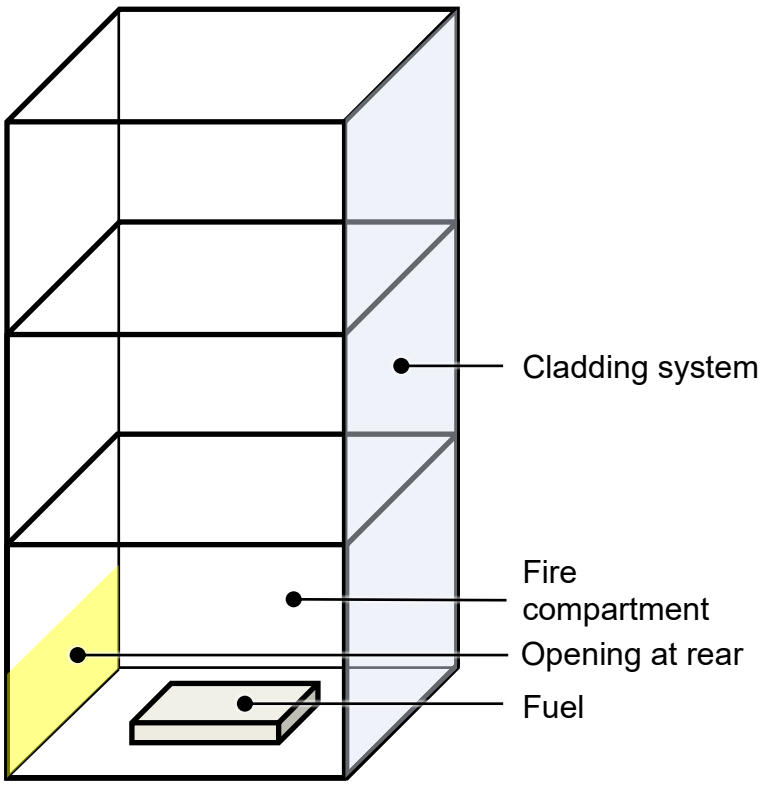

Figure C-3 Proposed experimental arrangement

C6-2.5 Experimental matrix

The proposed experimental matrix at this stage is flexible. Ultimately, it is likely that the experimental matrix will be limited by the available budget. As a minimum, it is proposed to undertake three tests to allow a proof of concept for the proposed approach. This will allow industry, should they find value in such an experimental approach, to undertake more testing in the future. It is proposed to test:

1. A system with masonry walls built on the concrete slab, and a glazed opening – this system represents a ‘baseline’.
2. A system with a fully glazed curtain walling system – this represents the current extreme in terms of maximum glazing.
3. A ‘built’ up system that is common of modern construction – e.g. timber stud or cold steel frame external wall with openings for glazing.

Further discussion on these is given in Section C6-2.6.

C6-2.6 Façade configurations

C6-2.6.1 Construction typologies

Three typologies are proposed for investigation purposes. These are intended to provide a broad representation of common façade types seen in residential buildings of all sizes based on OFR’s extensive project experience and to bound the extremes of the potential delay in storey-to-storey fire spread. An example of the preliminary survey of OFR projects is given in Appendix A.

In general, the three façade types will be established from the following design basis. The proposed systems will be considered compliant in accordance with Regulation 7(2) from the Building Regulations 2010 (as amended) for Relevant Buildings. The systems are:

1. Internal and external leaf masonry with a cavity ‘masonry’ (as defined in ADB)
2. Structural steel framing System (SFS) inner leaf with external ventilated rainscreen cladding ‘SFS’
3. Glazed curtain walling

The typologies defined below do not include specific products (though examples may be noted where these have been commonly seen), nor non-fire related performance parameters such as thermal, drainage and acoustics. It is understood that the typologies will be presented to a competent specialist designer of façades who will be responsible for producing the detailed designs. Window framing and fenestration will be developed with the specialist designer to be compatible with the proposed typologies. All openings and attachments will be compliant with Regulation 7(2).

C6-2.6.2 Masonry

The proposed build-up should align with ADB Volume 1 (2019 edition including 2020 amendments) Diagram 5.3 (Figure C6-4). Provisional material thicknesses are outlined in Table C6-1.

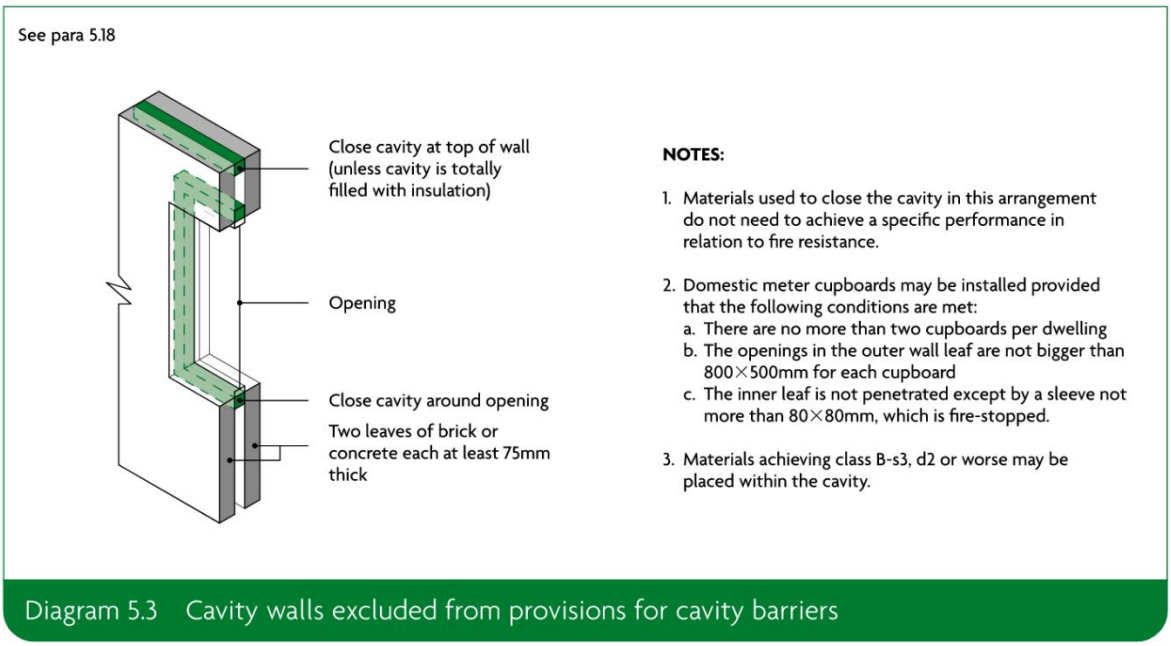

Figure C6-4 Diagram 5.3 from ADB Vol. 1

This typology is suggested as a benchmarking tool using what has historically been considered as the most robust form of cavity wall construction. Alternative masonry inner leaf configurations are available, such as render external skin, but given the limited number of tests proposed the arrangement set out below is considered most appropriate for benchmarking. Should the opportunity arise to add more representative wall-types to the programme schedule then such alternative systems could be considered.

Table C6-1 Masonry indicative build-up

Location in wall build-up	Material
Internal	Internal concrete block, 100 mm thick
↓	Vapour control layer (membrane)
	Mineral wool insulation fixed using adhesive and/or mechanical fixings c. 100 mm thick (total thickness subject to realistic U-value targets)
	Cavity c. 50 mm deep
External	External brick, 75 mm thick

The design should be such that the representative floor slab is fire-stopped up to the inner face of the inner leaf of brickwork. Cavity barriers are not required between the leaves of masonry in line with the floor slab, but window openings should be protected with an appropriate cavity barrier system. Timber window frames are expected.

C6-2.6.3 SFS

The proposed SFS system is an approximation of a standard arrangement seen in many multi-storey, multi-occupied residential buildings across England. The proposed system (Figure C6-5) would carry over the floor slab at the external face, providing a mounting frame for the external cladding system which is proposed to be an aluminium cladding panel. Indicative material thicknesses are estimated in Table C6-2. Cavity barriers and fire-stopping are shown indicatively but will be subject to review during the design development stage.

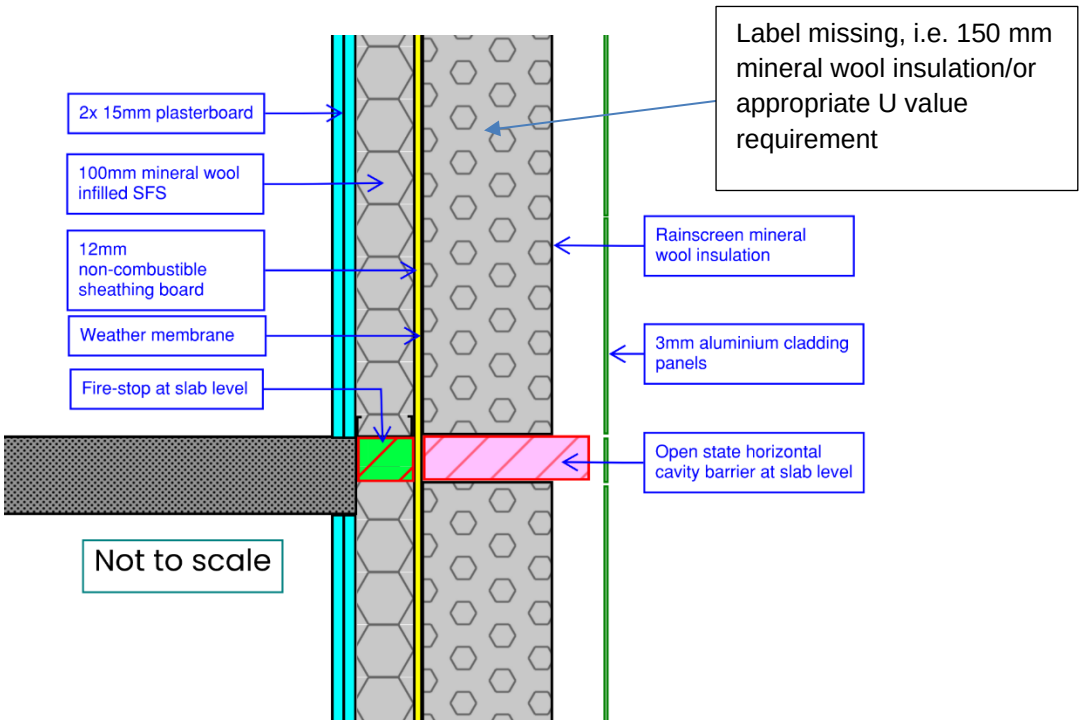

Figure C6-5 SFS indicative vertical section

Table C6-2 SFS indicative build-up

Location in wall build-up	Material
Internal	2 × 15 mm thick plasterboard
↓	100 mm thick mineral wool infilled SFS system
	12 mm thick non-combustible sheathing board
	Weather-proof membrane[1]
	Rainscreen mineral wool insulation[2] c. 150 mm thick (total thickness subject to realistic U-value targets)
	Cavity c. 50 mm deep
External	Aluminium cladding panels supported on lightweight metal rail and bracket system
(1) Example weather-proofing membrane: Tyvek Housewrap (2) Example rainscreen insulation: Rockwool Duoslab	

C6-2.6.4 Glazed curtain walling

Glazed curtain walling is most commonly found as a partial element of a wider external wall system as a means of providing feature details for windows over multiple stories. A fully glazed curtain walling system, while quite rare, is more commonly employed in high-rise façade designs. Glazed curtain walling design is highly specialised and usually involves bespoke elements. The indicative drawing in Figure C6-6 will require detailed design development.

Curtain walling is unique in that the entire external wall system is essentially hung from rails attached to the slab, meaning the system provides the complete weather line without the need for the addition sheathing boards or membranes. As such there is no need to provide an indicative build-up as for the previous two typologies.

As representative values, glazed curtain walling panels comprise two double glazed sheets each having total thickness of between 14-18 mm. Each is made up of two 6-8 mm glass panes bonded with laminate adhesive.

Fire-stopping in the spandrel zone area is highly dependent on the chosen product and the required classification. It would not be conducive to design development to limit this to a particular product at this stage, but it is anticipated this will be a mineral wool product.

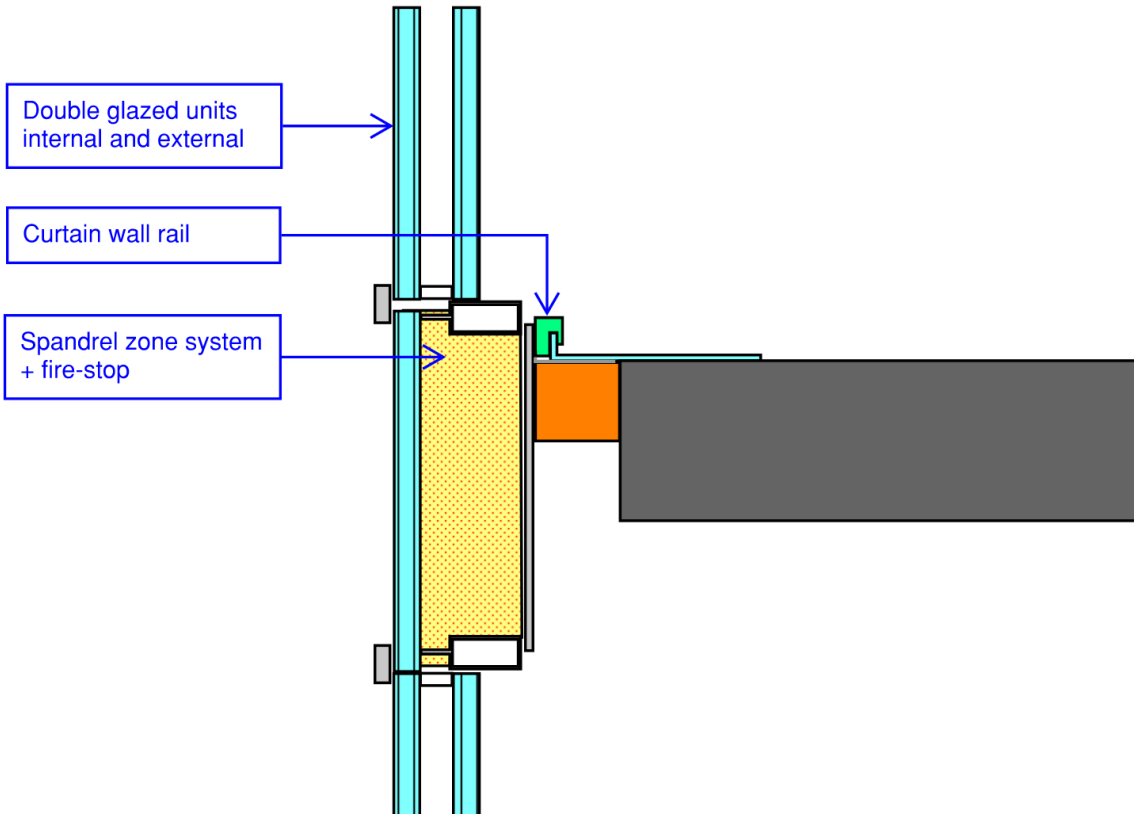

Figure C6-6 Glazed curtain walling indicative vertical section

C6-3. Next steps

In order to progress this work, the following steps should be taken:

1. Liaison with DLUHC to check that the work addresses the questions that are of value to the department.
2. Discuss with the Expert Review Panel (ERP) regarding proposed cladding systems.
3. Cost the proposals and compare with budget allocation.
4. Decide whether to progress to testing.

C6-4. References

[1] BSI, 'BS 8414-1:2015+A1:2017 Fire performance of external cladding systems. Test method for non-loadbearing external cladding systems applied to the masonry face of a building', BSI, London, 2015.

[2] BSI, 'BS 8414-2:2015+A1:2017 Fire performance of external cladding systems. Test method for non-loadbearing external cladding systems fixed to and supported by a structural steel frame', BSI, London, 2015.

[3] V. Dréan, R. Schillinger, and G. Auguin, 'Fire exposed facades: Numerical modelling of the LEPIR2 testing facility', presented at the 2nd International Seminar for Fire Safety of Facades 2016, Lund, Sweden, May 2016. doi: 10.1051/matecconf/20164603001.

Appendix I

Preliminary survey of wall system type and build-up. Note that not all columns have been completed.

Ref.	Type (Masonry / SFS / Glazed CW)	Sector	Stories / height	Build-up	Product classifications & comments	Cavity depth including insulation	Comments
1	SFS	Residential	G+5 (6)	2 layers 12.5 mm / 15 mm plasterboard (BG FireLine or Wallboard) VCLDuPont Airgauard A2 100 mm thick mineral wool insulated SFS (Rockwool steel frame slab between galvanised steel studs) 12mm thick carrier board RCM Y-Wall Breather membrane (photonwrap) 200 mm thick Rockwool Duoslab Aluminium rainscreen cladding system: Alucald 3 mm aluminium panel system with PPC finish PPC aluminium copings Thermal break pads behind cladding brackets	A2-s1, d0 A2? A1 A1 A1 A1 A2 Combustible	293 mm	-
2	SFS	Residential + GF commercial + carpark	23m	2 x 16 mm sheathing board (plasterboard?) 100 mm Isover APR 1200 Acoustic Partition Roll FS infill 104 mm thick SFS glav. steel studs 100 mm insulation Kingspan K15 cavity board insulation 105 mm Cavity with retention bracket thru to Metsec SFS studs 30 mm terracotta tiles	A2 estimated A1 A1 C-s2, d0 A1 A1	205 mm	-
3	Masonry	Residential + GF ancillary+ car park	G+14 (15)	300 mm RC Lift core Tyvek Housewrap breather membrane 45 mm / 80 mm K15 insulation 51 mm / 67.5 mm clear cavity with cavity wall ties DPC and cavity tray 102.5 mm brick	A1 Combustible (Class B?) C-s2, d0 A1	96 mm - 147.5 mm	--
4	SFS	Residential + GF/B ancillary	3 cores ranging	All SFS with brick facing or pre-cast concrete systems	(incomplete)	(incomplete)	-

Ref.	Type (Masonry / SFS / Glazed CW)	Sector	Stories / height	Build-up	Product classifications & comments	Cavity depth including insulation	Comments
			4-16 stories				
5	SFS	Student residential	23m	2 x layers plasterboard 10 mm SFS frame with mineral wool infill weather membrane 150 mm cavity Kingspan microrib panels	(incomplete)	(incomplete)	Odd system with no sheathing board or ventilation, SFS insulation covered by membrane only
6	SFS	Student residential	23m	2 x layers plasterboard 10 mm SFS frame with mineral wool infill 75 mm Ecotherm rigid insulation weather membrane 150 mm cavity Brickslip mounted on aluminium sheet	(incomplete)	(incomplete)	Odd system with no sheathing board or ventilation, SFS insulation covered by membrane only
7	Timber	Student residential	21m	Sheathing board (Cembrit Unipan A1) Tyvek Housewrap Brickslip mounted on aluminium frame (Mechslip system)	(incomplete)	(incomplete)	-
8	SFS	Student residential	23m	2 x 15 mm plasterboard 100 mm thick SFS galv. steel studs with mineral wool infill 12 mm Y-wall sheathing board SIKA membrane Rockwool duoslab 100 mm thick Aluminium cladding panels	(incomplete)	(incomplete)	-
9	SFS	Residential	15 storeys	2 x 15 mm plasterboard 151 mm SFS infilled with mineral wool Siniat GTEC Weather Defence Board 175 mm Rockwool Duoslab PPC aluminium cladding	(incomplete)	254 mm	-
10	SFS	Residential	15 storeys	2x 15mm plasterboard 150mm SFS infilled with mineral wool Siniat GTEC Weather Defence Board 180 mm Rockwool Duoslab 35 mm thick Corium brick tile system mounted on aluminium	(incomplete)	273 mm	-

Ref.	Type (Masonry / SFS / Glazed CW)	Sector	Stories / height	Build-up	Product classifications & comments	Cavity depth including insulation	Comments
11	Masonry	Residential	2 stories	112.5 mm thick blockwork (double layer with cavity insulation Liquid VCL to external face insulation mechanically fixed 160 mm - 200mm insulation (mineral wool) Either: Brick slip bedded in mortar or: Silicon render system	(incomplete)	No cavity	-