Case study 14

Belford Burn runoff attenuation scheme - Northumberland

Paul Quinn (Newcastle University), Alex Nicholson (Arup), Matt Hardwick (Ricardo AEA), Phil Welton (Environment Agency) and Peter Kerr (Environment Agency)

1. Catchment summary

Study location

The study is located within three Northumbrian catchments: Belford Burn, Powburn and Hepscott.

Catchment summary

The predominantly rural upper Belford Burn catchment (Figure 1) extends over 5.7km2 of Northumberland. Land uses within the catchment include grazing on the western uplands and arable land on the eastern area. Dominated by soils associated with waterlogging, the Belford Burn catchment is prone to flooding. Positioned approximately 4.5km upstream of Belford village in the western area of the catchment, Belford Burn's source is located within the Bowden Crags. The river channel flowing through Belford has been restricted by garden walls and other residential structures.

From a study of historic flood event hydrographs, Belford was identified as being a rapid response catchment. Catchment storage areas are rapidly depleted during a flood event generating overland flow. Within Belford village, 35 properties have been identified as at risk of flooding on the Environment Agency's Flood Zone Map.

Table 1 compares the Flood Estimation Handbook (FEH) catchment descriptors for the 3 catchments, which are broadly similar to each other with the exception of time-to-peak (Tp), which is largest in the Hepscott catchment due to the shallower topography.

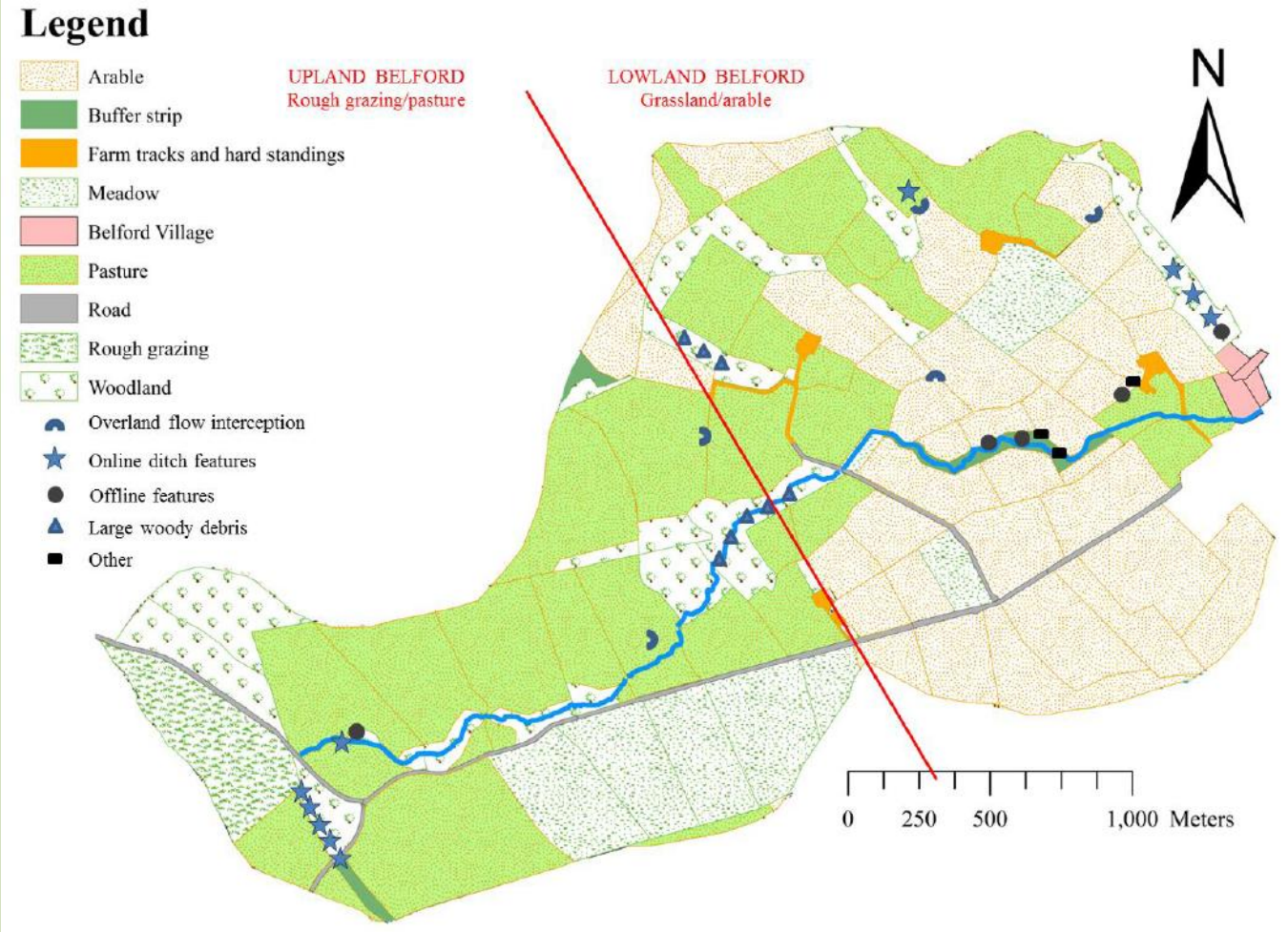

Figure 1: Upper Belford Burn catchment with locations of RAFs

Source: Quinn et al. (2013)

Table 1: FEH catchment descriptors

FEH Descriptor	Description	Belford	Hepscott	Powburn
Physical attributes				
AREA	Area, km^2	5.5	8.0	10.7
ALTBAR	Mean catchment altitude, m	118	73	47
DPSBAR	Mean slope, m/km	62.5	23.7	84.4
URBEXT	Fraction of urban extent, 0:1	0.0	0.0159	0.0005
Hydrological attributes				
BFIHOST	Baseflow Index est from soil type, fraction 0:1	0.313	0.317	0.408
PROPWET	Proportion time SMD <=6mm 1961-90, fraction 0:1	0.45	0.34	0.45
SAAR	Average annual rainfall 1961-90, mm	695	698	761
SPRHOST	Standard percentage runoff est from soil type, %	40.76	40.98	37.14
Tp(0)	Time-to-peak of an instantaneous UH, hours	2.0	3.9	2.3

Source: Quinn et al. (2013)

Study summary

North-east England has suffered several severe flood events in recent years. The Environment Agency, working alongside the School of Civil Engineering and Geosciences at Newcastle University, has developed flood mitigation schemes which are soft engineered and on a small scale. The project's main objectives are to:

- provide guidance on the construction of soft engineered features
- assess the local functioning of the installed features during recent flood events
- upscale findings using hydrologic and hydraulic modelling for the assessment of the downstream impacts of interventions in the 3 study catchments

The designed schemes focus on the storage of run-off within small scale catchments (<10km2). For Belford Newcastle University has developed a catchment based flood solution. It has designed and implemented a network of run-off attenuation features (RAFs) upstream of Belford. RAFs are an example of a Working with natural Process (WwNP).

Detailed field monitoring has been set up and detailed hydrological analysis has been performed. Newcastle University has collected 5 years of rainfall and stage data. Royal Haskoning was later asked to help assess the impacts of the flood management strategy at Belford.

Newcastle University was commissioned by the Environment Agency to construct a network of WwNP features at Belford. Five broad classifications of WwNP measures were installed classified as online or offline features:

- overland flow interception
- online ditch barriers
- large woody debris
- offline ponds
- other features (for example, riparian zone management)

A total of 35 WwNP measures have been installed in the Belford catchment by January 2012.

Community involvement

It was considered vital to get farmers, regulatory bodies, landowners, the local community and other relevant stakeholders involved with the project from the start. This ensured that all aspects of the proposed work could be explained clearly to all stakeholders and promoting the feeling that stakeholder

input was valued throughout the work.

Within the study, farmers' knowledge has been used to inform the decision process surrounding the identification of the most suitable location for RAF construction. Overall the project received a positive response from the local community.

2. Data summary

Datasets and analysis techniques used

No single method is used to determine the most suitable location for a WwNP measure. However, it is common to identify a location with fast flow pathways, which also would be an ideal site to target peak storm flows. High resolution Digital Elevation Model (DEM) data and flow accumulation software were very useful in highlighting possible areas for WwNP features in the Belford catchment.

Making use of the knowledge of local farmers is advised for such as project and, based on their recommendations, it is generally possible to verify the merits of the location for WwNP installation using topographic digital data, simple flow accumulation rules and walkover surveys.

Installed WwNP features were monitored during flood events to assess their effectiveness and identify potential beneficial modifications. The assistance of farmers and local landowners is doing this is beneficial.

Data restrictions

None.

3. Model summary

Catchment processes investigated

Hydrological and hydraulic modelling was used to quantify flood risk in terms of flood volumes stored and net reduction of peak flows. The FEH rainfall–run-off methodology was used to estimate the return periods of observed flood events. Different probability design events were considered and the impact on design flood hydrographs was investigated. The consequences were considered largely as a change in response of the hydrographs rather than impact in terms of, for example, count of properties affected before and after installation of the WwNP measures.

The study was largely concerned with run-off processes and reconnecting rivers to floodplains (ponds), but also considered the nature of the system in terms of run-off response and some in-channel blockage in small ditches. The investigators also considered the effects of sediments and highlighted the need to use sediment traps in series with pond storage to allow maintenance.

Model assumptions

The hydrology was based on standard FEH techniques. The changes to design hydrographs were investigated using a simplified POND model, which models changes in storage and therefore attenuation.

Hydrological analysis - The two largest storm events which had caused flooding (to a small degree) in Belford village and were within the study period were chosen for analysis.

The March 2010 flood (winter event) resulted from a 2-day storm during which 59mm and 77mm of rainfall fell in the 24 and 48 hour periods preceding the flood peak, respectively. The FEH Depth Duration Frequency (DDF) model was used to estimate the return periods of these total rainfall amounts as:

- 5 year return period for the 24 hour total
- 12.5 year return period for the 48 hour total

The July 2009 (flood summer event) resulted from a 2-day storm event. Using the same DDF method as

for the winter flood event, the following return periods were calculated;

- 46mm rainfall total for the 24 hours proceeding the flood peak which equated to a 10 year return period
- 70mm rainfall total for the 48 hours proceeding the flood peak which equated to a return period of 17.5 years

FEH rainfall–run-off methodology - The March 2010 storm was compared with the 1 in 100 year flood event derived using the 12 and 24 hour FEH design storm event. This storm event was chosen because of its similarity in peak flow and hydrograph width to the observed hydrograph. It was concluded that estimates of return periods for storm events were unreliable due to insufficient data, calling into question the use of the FEH method for this type of system.

Monitoring WwNP measures (offline pond storage) - An offline pond (RAF-3), located immediately upstream of Belford village, was analysed in detail to understand the functioning of this particular WwNP measure. The pond has a spillway height of ~0.35m and a stage level above this height results in pond infilling.

The following datasets were gathered:

- Stream stage heights – measured using pressure transducers (~15 minute recordings) positioned immediately upstream of the pond inlet
- River flow measurements – flow data were used to derive a stage/discharge relationship; a time series of upstream flows was derived by applying the flow data to the stage dataset
- Stage heights within the offline pond – measured using pressure transducers (~15 minute recordings)
- Field surveys of the pond – a stage–volume relationship was established by applying the field survey data to the stage heights recorded in the offline pond to generate a time series of pond storage volumes

Figure 2 shows the stage and volume data for RAF-3 for the July 2009 event. These data show that the pond has a potential storage volume of 370m3 and that it was effective at capturing flow. However, the pond reached 90% capacity about 1 hour before the main flood peak. This information was used to modify the spillway height to increase the pond's storage capacity during the later stages of the storm event. The data also showed that the pond took 6 hours to empty, which was considered fast enough.

Local scale impacts of features - The local impacts of WwNP features were determined by comparing the pre- and post- change flows in the stream channel immediately downstream using RAF-3 as an example. Further details of this analysis are provided in Nicholson et al. (2012) and Nicholson (2013).

For historical events it was not possible to establish the pre-change flows, so a simple conservation equation was used:

$$Impact\ (t) = [Q_{in}(t) - Q_{out}(t)]$$

where Qin is the inflow from the channel to the pond and Qout is the outflow from the pond. This formula calculates the net gains or losses from the stream to the pond and assumes that the pond is closely linked to the stream. Local lateral overland flow inflows and infiltration losses from the pond are assumed to be small and are therefore excluded from the equation. Flows into and out of the pond were estimated from a weir equation and stream stage, and outflows were derived from a hydrostatic equation and pond depths. These equations, termed the POND Model, were validated by establishing if the observed pond storages were reproduced accurately in the simulations.

.

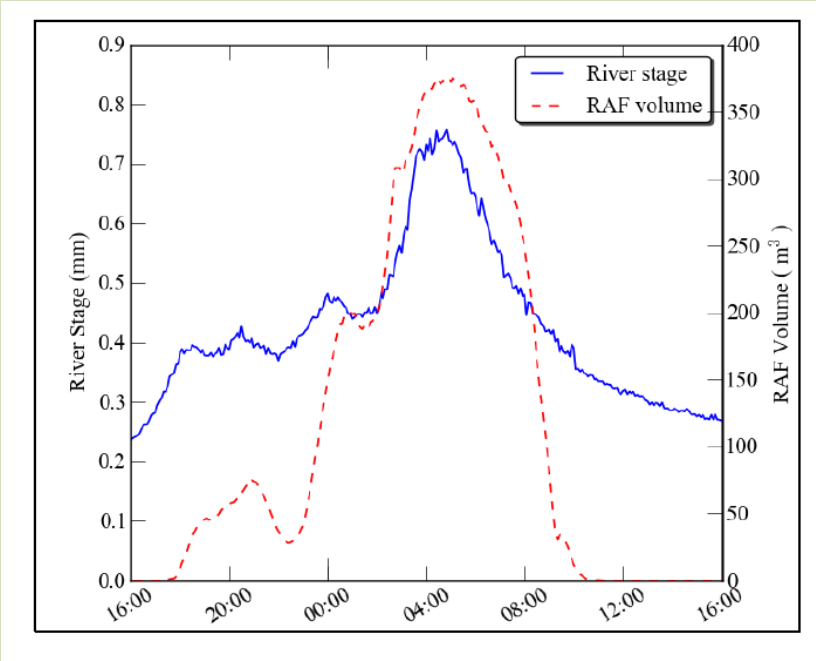

Figure 2: Data from RAF-3 for the 17 July 2009 flood event

Source: Quinn et al. (2013)

Figure 3 shows the results of this analysis for the summer and winter storm events. For both events the impact is small; net storage occurs on this rising limb (positive impact) and net loss occurs on the recessional limb (negative impact). The impact is small at the time of peak flow because little storage is available. However, WwNP measures are designed to work as a network and therefore the impact will be greater if a network exists.

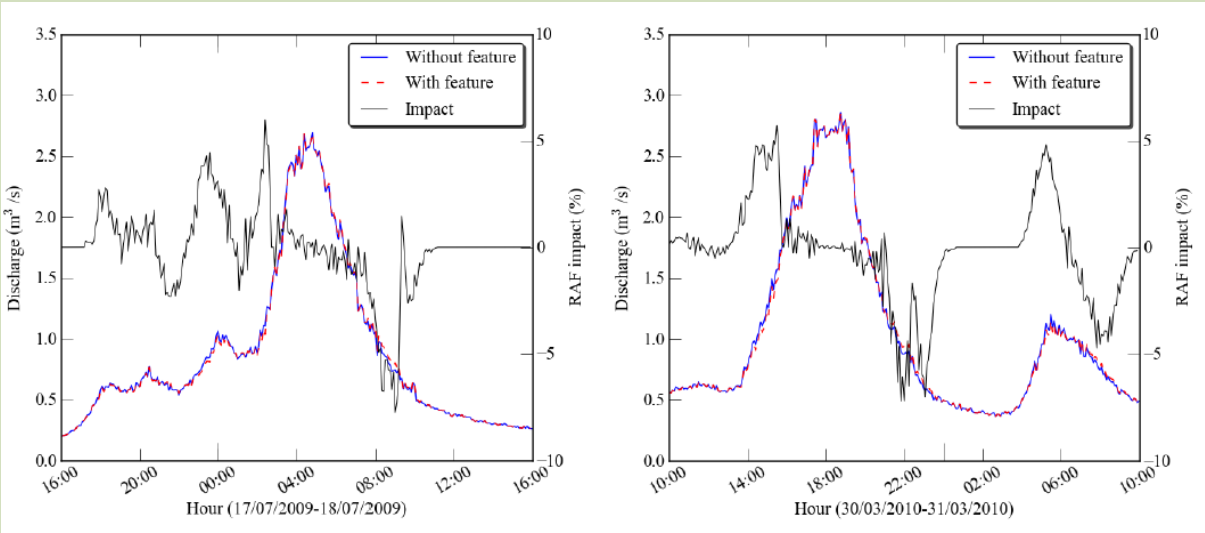

Figure 3: Pre- and post-change hydrographs for RAF-3 and impact: left panel July 2009 event, right panel March 2010 event

Source: Quinn et al. (2013)

Determining the number of RAFs required for a positive impact - A hypothetical reach was designed to determine how many RAFs would be required to store the volume of water required to reduce the flood impact at Belford (Figure 4). Based on the experience and opinions of local farmers on the acceptable sizes of offline ponds, each of the offline ponds in this reach was assigned a potential storage volume of 550m3.

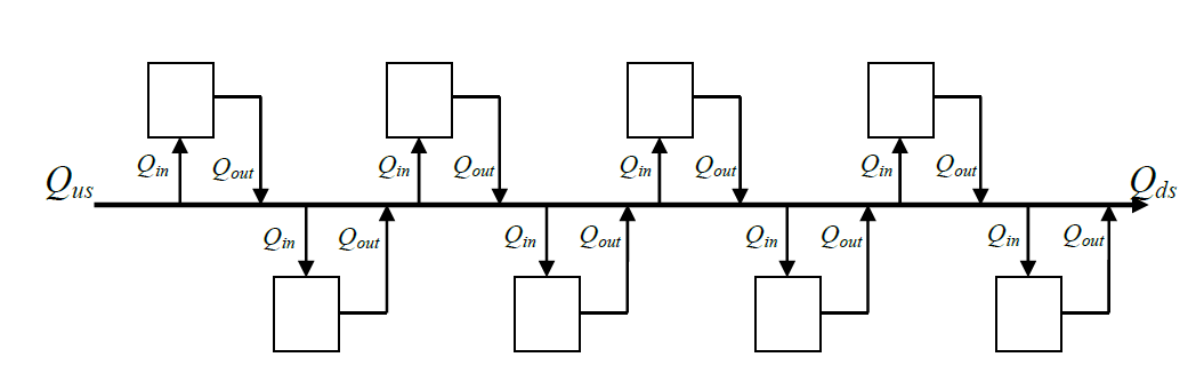

Figure 4: Hypothetical study reach with offline pond network

Source: Quinn et al. (2013)

The Pond Model equation was applied for the summer and winter events to establish the number of RAFs required. The upstream channel stage height (Qus) was set as in previous analysis. Although 2-dimensional hydraulic modelling was also conducted, the outputs were similar to the Pond Model approach and hence these results were not reported.

Figure 5 shows the results from the simulation of the downstream channel flow (Qds). The upper blue line on the graph represents a single feature (550m3 storage) and the lower green line represents 35 features (19,250m3 storage). Increasing the number of WwNP features on the hypothetical reach resulted in attenuation of the flood peak; water was stored in the WwNP network on the rising limb of the hydrograph and returned to the stream on the recessional limb. As a pond started to fill, the immediately downstream flood stage was reduced, delaying the onset of filling of the downstream RAF pond and producing a cascade effect along the reach.

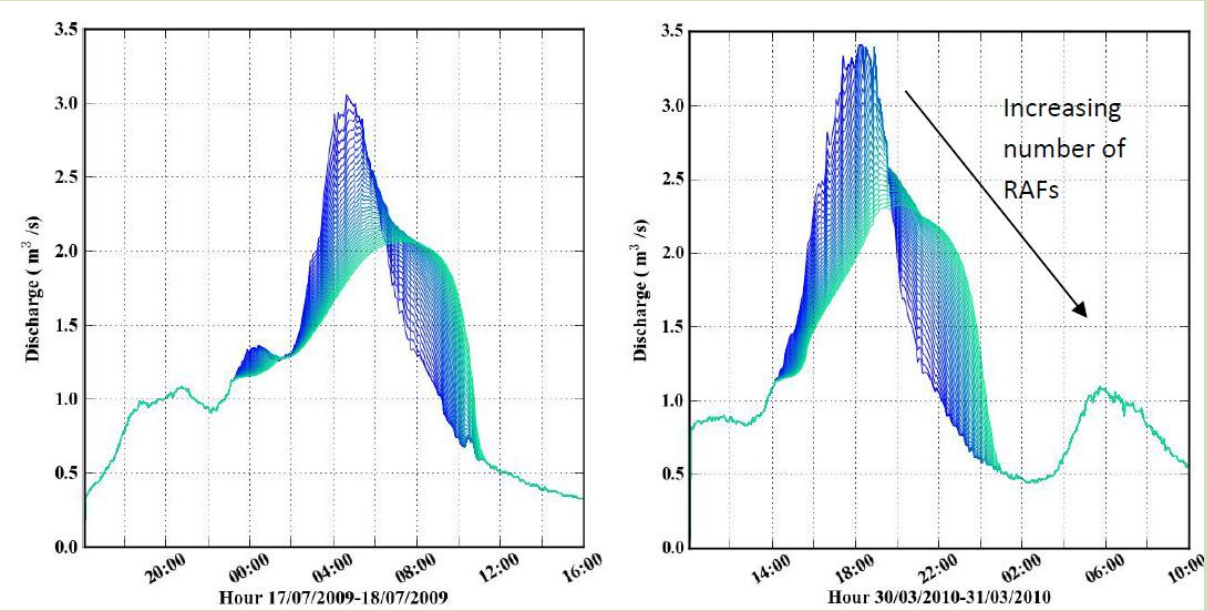

Figure 5: Impact of varying configurations of offline ponds along a hypothetical study reach (left panel July 2009, right panel March 2010)

Source: Quinn et al. (2013)

Figure 6 shows the results of the same simulation using the 100 year (24 hour) return period flood event

derived from the FEH rainfall-run-off methodology. The simulation revealed that, due to the shape of the hydrograph, the impact of increasing the number of WwNP features within the network has a smaller effect. It also showed that the effectiveness of a WwNP network depends on the flood magnitude and the pond 'filling time', which in turn depends on the point at which the stream stage level exceeds the spillway inflow elevation.

ISIS modelling - The results from applying an ISIS one-dimensional hydrodynamic model indicated that the downstream impact on flood levels related to WwNP features was negligible for larger design events. However, there were insufficient data to fully calibrate the ISIS model and flows could only be checked by using an approximate area scaling method to scale the Belford flows for the target sites.

TOPMODEL - Catchment scale modelling simulations were also undertaken using TOPMODEL, a low-parameter, lumped conceptual rainfall–run-off model. Calibration indicated that TOPMODEL was capable of reasonably reproducing observed flood events at Belford. Modification of the calibrated TOPMODEL enabled it to capture the storage/attenuation effects associated with the WwNP network in Belford. However, this approach has not yet been fully developed.

Limitations of the project - Due to the short time period of data available, it was not appropriate to use statistical analysis to detect the influence of installed interventions on downstream river responses. Natural climate variability also complicates the issue of detection (O'Connell et al. 2005). It has so far not been possible to provide the local communities with details of the level of flood protection based on the modelling. .Due to factors surrounding the river network (for example, floodplain storage not being considered in detail), the data from this study cannot be extrapolated to larger catchments (approximately >10km2).

There were insufficient data to reliably calculate the return periods for the observed storm events used in the hydrological analysis. A hypothetical study reach was used to assess WwNP measures instead of actual channel reach. The use of the scaled Belford flows in the ISIS models may not be a suitable method.

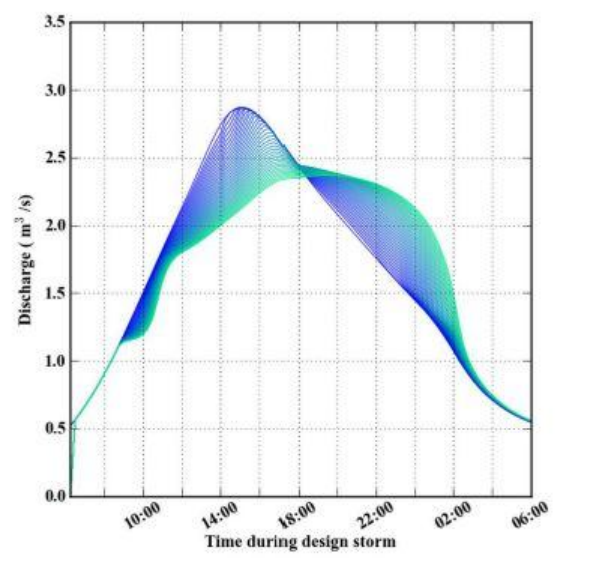

Figure 6: Impact of varying configurations of offline ponds along a hypothetical study reach for the 100 year design period event

Source: Quinn et al. (2013)

Data and model outputs

- Observational datasets of rainfall, river stages and river flows were generated in all catchments.
- Hydrologic and hydraulic modelling produced flood hydrographs which help to understand the impacts of WwNP measures on the Belford catchment.

Model performance

System performance was not considered in terms of failure of WwNP measures, but the study focused on offline pond storage features which are considered to have a low risk of failure. Adoption and maintenance of the pond features would be crucial to long-term performance. This also shaped thoughts on the design of pond features in general, and whether a combination of sediment trap and pond should be used in combination for ease of maintenance.

4. Lesson learnt

Choice of tools

This is a good example of simplified modelling supported by detailed local knowledge and monitoring. The hypothetical POND modelling gives a clear visualisation of the effect of storage on attenuation, although it did not incorporate catchment-specific complexity. However, attempts to model the catchment using ISIS and TOPMODEL were, in part, incomplete due to insufficient data for calibration.

Catchment scale and typology

Data for this project cannot be extrapolated to catchments approximately >10km2 due to factors surrounding the river network; for example, floodplain storage has not been considered in detail. To upscale the local scale data two approaches were trialled.

- Hydrologic models reproduce observed feature responses and enable the extrapolation of data to allow an impact assessment of hypothetical networks of features. Models were based on recent and designed storm events.
- Outcomes from this analysis included some guidance on the storage/attenuation volumes required to reduce flood risk.

Wider benefits

The study did not fully consider multiple benefits and instead focused on the potential positive impact the WwNP installation would have on flood risk.

Future research needs

The study highlighted the importance of timing in the use of offline pond storage and the need for in-series offline storage to provide sufficient attenuation. Much will be learnt in the future based on the detailed monitoring data being collected.

The investigation covered new ground with the analysis of in-series pond WwNP measures and the need for a large number of features. Capturing more observation data is essential to understanding the impacts of different duration events.

Experience gained from the monitoring will be valuable to building confidence in WwNP measures. In particular, the use of multiple in-series offline features is required to have significant impact; this is clearly illustrated by modelling of storage using the hypothetical POND Model (Nicholson 2014). The POND Model is a simple spreadsheet based tool that can model the impact of adding storage on a hydrograph.

5. References

NICHOLSON, A.R., 2013. On-farm storage for flood mitigation. Newcastle University. Unpublished report.

NICHOLSON, A.R., 2014. Quantifying and simulating the impact of flood mitigation features in a small rural catchment. PhD thesis, Newcastle University.

NICHOLSON, A.R., WILKINSON, M.E., O'DONNELL, G.M. AND QUINN, P.F., 2012. Runoff attenuation features: a sustainable flood mitigation strategy in the Belford catchment, UK. Area, 44 (4), 463-469.

O'CONNELL, P.E., BEVEN, K.J., CARNEY, J.N., CLEMENTS, R.O., EWEN, J., FOWLER, H., HARRIS,

G.L., HOLLIS, J., MORRIS J., O'DONNELL, G.M., PACKMAN, J.C., PARKIN, A., QUINN, P.F., ROSE S.C., SHEPHERD, M. AND TELLIER, S., 2004. Review of impacts of rural land use and management on flood generation: impact study report. Defra R&D Technical Report FD2114/TR. London: Department for Environment, Food and Rural Affairs. Available from: http://randd.defra.gov.uk/Document.aspx?Document=FD2114_2197_TRP.pdf [Accessed 17 December 2015].

QUINN, P., O'DONNELL, G., NICHOLSON, A., WILKINSON, M., OWEN, G., JONCZYK, J., BARBER, N., HARDWICK, M. AND DAVIES, G., 2013. Potential use of runoff attenuation features in small rural catchments for flood mitigation. Report for the Environment Agency by Newcastle University and Royal HaskoningDHV. Available from: https://research.ncl.ac.uk/proactive/belford/newcastlenfmrafreport/ [Accessed 13 January 2016].

WILKINSON, M. AND QUINN, P., 2010. Belford catchment proactive flood solutions: a toolkit for managing runoff in the rural landscape. In Agriculture and the Environment VIII. Climate, Water and Soil: Science, Policy and Practice, Proceedings of the SAC and SEPA Biennial Conference (Edinburgh, 31 March to 1 April 2010), edited by K. Crighton and R. Audsley, 103-110.

WILKINSON, M., QUINN, P., BENSON, I. AND WELTON, P., 2010a. Run-off management: mitigation measures for disconnecting flow pathways in the Belford Burn catchment to reduce flood risk. In Managing Consequences of a Changing Global Environment, Proceedings of 3rd BHS International Conference (Newcastle, 19–23 July 2010). British Hydrological Society.

WILKINSON, M., QUINN, P. AND WELTON, P., 2010b. Runoff management during the September 2008 floods in the Belford catchment, Northumberland. Journal of

Project background

This case study relates to information from project SC120015 'How to model and map catchment processes when flood risk management planning'.

It was commissioned by the Environment Agency's Evidence Directorate, as part of the joint Flood and Coastal Erosion Risk Management Research and Development Programme.

Project manager: Lydia Burgess-Gamble, Evidence Directorate

Research contractors: Barry Hankin (JBA), Sebastian Bentley (JBA), Steve Rose (JBA), Keith Beven (Lancaster University), Trevor Page (Lancaster University), Mark Wilkinson (James Hutton Institute), Paul Quinn (Newcastle University) and Greg O'Donnell (Newcastle University).

For more information contact: fcerm.evidence@environment-agency.gov.uk