PART 4

STEEL AND ALUMINIUM CONSTRUCTION

PART 4

STEEL AND ALUMINIUM CONSTRUCTION

STEEL AND ALUMINIUM CONSTRUCTION (continued)

STEEL AND ALUMINIUM CONSTRUCTION

Section 4.1 – Materials

Steel plates and sections

4.1.1 Steel is to be manufactured by an approved process in accordance with Lloyd's requirement for shipbuilding quality mild steel, BS EN10.025(1) [S235 JR] DIN/EN 10025, or equivalent DIN or similar Standards.

4.1.2 Scantlings are based on mild steel with the following properties:-

Yield strength (min)	235 N/mm^2
Tensile strength	340/470N/mm^2
Modulus of elasticity	200 x 10^3 N/mm.

4.1.3 Documentation in the form of mill test certificates for hull plating and main structural members should be available for inspection and identification by the Surveyor.

4.1.4 Where the use of special steels is proposed, details of material specifications are to be submitted for approval prior to commencement of construction.

4.1.5 Steel plate and sections should be stored so that distortion does not occur, and immersion in water is avoided.

Aluminium plates and sections

4.1.6 Aluminium alloy plates and sheets for uses with these Standards are to be marine grade to the requirements of 5083/DIN 1725 (or equivalent) with consumables to 5356 (or equivalent).

4.1.7 Aluminium sections, where not available to the standard in Paragraph 4.1.6, may be to 6082 (or equivalent), with consumables to 4043 (or equivalent).

4.1.8 Scantlings are based on marine grade aluminium alloy with the following properties:-

0.2% proof stress (min)	170 N/mm^2
Tensile strength (min)	260 N/mm^2
Modulus of elasticity	69 x 10^3 N/mm^2.

4.1.9 Plate materials should be suitable for the structural purpose intended.

4.1.10 Documentation in the form of mill test certificates to be provided for all aluminium materials.

4.1.11 Aluminium materials are to be stored under cover in clean, dry conditions and in such a manner that distortion is prevented. To avoid contamination, the storage area is to be separate from storage of other metals.

Steel construction

4.1.12 Construction should be carried out in a designated area and, where practicable, protected from adverse wind and weather conditions.

4.1.13 Steel plate and section may be cut by profile burning, mechanical saw, mechanical shears/guillotine, or other approved processes. Cut edges are to be straight and free from scoring, swarf, and burrs. Plate edge preparation is to be carried out prior to erection where possible.

4.1.14 Plate edges are to be carefully aligned to avoid distortion on welding.

4.1.15 Scantlings are to be obtained from the associated Tables shown in these Standards.

Aluminium construction

4.1.16 Fabrication and erection of aluminium structures is to be carried out under cover, screened from wind and weather, and is to be kept separate from steel fabricating areas.

4.1.17 Where temperatures below 0°C can occur, the fabrication and construction area is to be heated. Welding of aluminium alloy is not to be carried out in temperatures of less than 5°C.

4.1.18 Plate, sheet, and sections may be cut by plasma process, mechanical saw or mechanical shear/guillotine. Such tools are to be free from contamination by other materials. Where plate is to be flanged for pre-forming structural sections, the inside radius is to be a minimum of 1.5 times plate thickness, and plate/sheet is to be of flanging quality.

4.1.19 All plate edges, and areas to be connected by welding, are to be de-greased with a de-greasing agent and scratch brushed to remove oxides.

4.1.20 Scantlings are to be obtained from the associated Tables shown in these Standards.

4.1.21 Care is to be taken when connecting together steel and aluminium structures or components. Welded connections may be by bi-metallic bar (‘Kelocouple’ or equivalent) or by bolting. Bolted joints are to be insulated between the metals. Bolts are to be stainless steel, or plated and insulated from bi-metallic contact, with ferrules and washers of inert materials.

Section 4.2 – Steel and aluminium hull construction

4.2.1 Minor details of construction based on existing designs, shipyard standards, and normal practices proposed as an alternative to the following standards, will be considered upon submission of details for consideration.

4.2.2 Scantlings are to be in accordance with the appropriate section or Table reference.

4.2.3 Where the hull construction is from a standard kit form, details of the kit, together with scantlings and assembly details, are to be provided prior to construction commencing.

4.2.4 Care is to be taken to avoid abrupt changes in the structure of the vessel (e.g. alignment of engine girders to side girders, tank sides, etc.), but where such changes are unavoidable, adequate compensation is to be incorporated to the approval of the Surveyor.

4.2.5 All vessels are to have frames and/or stiffening members, which may be either transverse or longitudinally arranged or be a combination of both. Such vessels having only longitudinal stiffening are to have adequate stringers on each side between the keel and the deck, and must have transverse stiffening incorporated as required by Paragraph 4.2.7 and 4.4.2.

4.2.6 Generally frames, beams, and other stiffeners are to be of flat bar, bulb, or angle section and toe welded. Details of alternative sections to those specified in section 4.22 are to be submitted for approval.

4.2.7 Longitudinal stiffeners may include stringers, engine seatings and chines, subject to approval.

4.2.8 Particular attention is to be given to the stiffening at the ends of the vessel and especially in way of areas which may be subjected to slamming.

4.2.9 Adequate access is to be arranged to double bottom tank areas and in way of boundaries to facilitate inspection and testing.

Section 4.3 – Keel, centre and side girders

4.3.1 Keel may be of bar, plate, box type, or of fabricated sections (see Figure 4.23.9).

4.3.2 The dimensions of bar and plate type keels are to be in accordance with Table 4.22.1, and should be fitted in association with a centre girder conforming to Table 4.22.5.

4.3.3 The centre girder in vessels with a plate keel is to extend over the whole length of the keel, except in the way of the main engine. The side girders forming the engine seating may be accepted in lieu of the centre girder, subject to the approval of the Surveyor, and provided continuity of strength is maintained. The thickness of vertical plate girders forming engine seats shall be at least that required for the centre girders.

4.3.4 The centre girder and the engine seatings are to overlap a minimum of one frame space, and are then to be tapered to avoid abrupt changes in structure.

4.3.5 Where it is proposed to fit side girders in lieu for a centre girder, (e.g. in order to form a duct for the propeller shaft in vessels with a forward engine room), the strength of the side girders is to be at least equivalent to the substituted centre girder.

4.3.6 Where it is proposed that a box keel be fitted, details are to be submitted for consideration and approval.

4.3.7 Fabricated ballast keels constructed with heavy bars will be specially considered after submission of section and welding details prior to construction. Where practicable, the side plates of such keels should be incorporated into the bottom structure.

Section 4.4 – Bottom construction floors and longitudinals

4.4.1 In transversely framed vessels, plate floors in accordance with Table 4.22.4 and Figure 4.23.6 are to be fitted at every transverse frame, and weld connected to the side frames and shell. Where there is a considerable rise of floor, and at the fore and aft ends, the depth of the floor may require to be increased to efficiently connect to the side frames.

4.4.2 In longitudinally framed vessels, plate floors are to be fitted at every third frame or at a spacing not exceeding 1.5m whichever is the lesser, and the depth of floor as shown in Table 4.22.4

4.4.3 The top edges of all floors are to be flanged or fitted with a face bar. Face bars on engine room floors and inside water tanks are to be continuously welded.

4.4.4 The depth of floors at the centreline is to be not less than that specified in Table 4.22.4. Where there is a rise of floor, the depth of floors is to be increased in order that the depth at 25% of the distance between the centreline and the outboard extremity of the floor is not less than 75% of the required depth of floor at the centreline.

4.4.5 An additional longitudinal girder is to be fitted each side, midway between the centre girder and the outboard end of the floor. The height of this side girder is to be the height of the floor at that point, with thickness and face flat as per Table 4.22.5. Where the span of the floor

from centreline to outboard end is less than B/4, the side girder may be omitted.

4.4.6 Engine seats are to comprise of substantial side plate girders. Girders are to be fully welded to the plate floors, bottom plating and bulkheads were applicable. A heavy flat bar top plate for engine mounting is to be fully welded to the top of the girder, and arranged with tripping brackets to each plate floor position.

4.4.7 Girders and top plates may be cranked to suit the engine installation, but abrupt changes in direction are to be avoided. Ends of the engine girders are to be bracketed over a minimum of two frame spaces, with top plates tapered to suit. Transverse floors between girders may be reduced in height to suit deep sumps etc., provided substantial fully welded face bars are fitted.

4.4.8 Engine seating arrangements are to meet with the requirements of the engine Manufacturer.

Section 4.5 – Integral tanks

4.5.1 The minimum depth and thickness of the centre girder is to be at least equal to that of the adjacent floor.

4.5.2 Plate floors are to be fitted at every frame in integral tanks (see Figure 4.23.6).

4.5.3 Generally the thickness of integral tank plate floors is to be not less than 80% of the thickness of the centre girder. The thickness of plate floors in the engine space and at the boundaries of double bottom tanks is to be at least 1mm thicker than plate floors elsewhere.

4.5.4 Where the depth of the floor exceeds 1m, vertical stiffeners are to be fitted to plate floors at a spacing not exceeding 1m.

4.5.5 Manholes are to be cut in non-watertight plate floors as necessary to provide adequate access to the double bottom structure. The edges of the manholes are fitted with face flat bars in all cases where the lower edge of the cut manhole is less than 150mm from the connecting shell plating.

4.5.6 Non-watertight plate floors are to be fitted with drainage and ventilation holes sited as low and as high as practicable. The cross-sectional area of ventilation holes in plate floors within tank spaces is not to be less than 25% greater than that of the tank filling pipe.

4.5.7 The thickness of plating forming the boundaries of such tanks is not to be less than that required for the surrounding structure.

4.5.8 The thickness of the tank tops and associated margin plating is to be 80% of the adjacent floor thickness or 6mm whichever is the greater.

4.5.9 If mechanical grabs are to be used to discharge catch, then the thickness of plating is to be increased by 1mm in way of the loading/unloading hatch. This requirement may be waived where the fish room floor is sheathed with timber or other approved material.

4.5.10 Baffle plates are to be fitted in integral tanks to minimise free surface effects.

4.5.11 Fuel/oil tanks with a capacity of 200 litres and above are to have a manhole of sufficient dimension to permit cleaning of the tank. Where the manhole is not sited at the top of the tank, a save-all is to be fitted below the manhole.

4.5.12 Side frames are to be connected to the tank tops by brackets in accordance with Figure 4.23.5, or to the satisfaction of the Surveyor.

4.5.13 All tanks to be pressure tested to conform fully to section 1.4. and a certificate confirming compliance is to be provided for each tank.

Section 4.6 – Stem

4.6.1 The stem may be either of the bar or plate type, or a combination of both.

4.6.2 Bar stems are to be in accordance with the scantlings given in Table 4.22.1, with horizontal web plates connecting the stem bar and ends of longitudinals, stringers, and bulwark rails.

4.6.3 Plate stems are to be in accordance with the scantlings given in Table 4.22.1, and stiffened with horizontal web plates of a thickness not less than that of the adjacent stem plate, fitted between decks and below the lowest deck, spaced such that the unsupported length of the stem plate does not exceed 1.25m. Whenever possible, the web plates are to be positioned at the ends of longitudinals and stringers. Where the radius of curvature of the plate stem is large, a centreline vertical web may be required to the approval of the Surveyor.

Section 4.7 – Bulbous bows and nozzles

4.7.1 Where bulbous bows are to be fitted, adequate provisions are to be made to ensure access for welding/moulding procedures.

4.7.2 Where bulbous bows are to be utilised as ballast or fresh water tanks, they are to meet the criteria of Sections 9.1.10 and 9.11 respectively of these Standards.

4.7.3 Where a nozzle is to be fitted, details of the hull connection and internal stiffening are to be submitted for approval.

Section 4.8 – Stern frames

4.8.1 Stern frames are to be fabricated from heavy plate and bar, stiffened with transverse web frames/floors, and forming an integral part of the hull structure.

4.8.2 Sole pieces with unsupported span of over 1m are to have a heavy centreline web fitted on the top side, suitably integrated with the radius section where the sole piece meets the stern post.

4.8.3 The sole piece is to be extended forward of the stern post by a minimum of two frame spaces, tapered off where required to form the joint to the keel bar.

Section 4.9 – Side framing

4.9.1 The scantlings of transverse main frames are to be in accordance with Table 4.22.6.

4.9.2 Deep web frames and deep beams fitted in way of heavy deck loads, are to have a depth of at least twice that required for ordinary frames.

4.9.3 Where deep web frames are to be fabricated from plate, face bars are to be fitted and fully welded.

4.9.4 The section modulus is to be at least four times that required for ordinary frames. In vessels of 20m ‘L’ and over, web frames are to be fitted at every fifth frame in the engine room.

4.9.5 Deep web frames may also be required in way of other highly stressed areas to the approval of the Surveyor.

4.9.6 Side frames are to be bracketed to deck beams, floor plates, inner bottoms and tank tops in accordance with Figures 4.23.3 & 4.23.5.

4.9.7 Web frames are to be either connected to deep deck beams by flanged brackets, or fabricated as a ring frame continuous across the deck, in which case the corner is to be radiused to form a ring.

4.9.8 Framing at areas of local stress, in way of gallows, gantries and winches, is to be strengthened to the approval of the Surveyor.

4.9.9 Where the Depth ‘h’ (Figure 4.23.8) in relation to side frames is greater than 2.5m, a longitudinal stringer of equal dimension to that required for side frames is to be fitted midway between the deck and floor/tank top connection.

4.9.10 When the construction of the vessel is by use of a pre-cut kit assembly, the frames may be of the web frame/ring type throughout, with 'T' or corner welded face bar.

Section 4.10 – Shell plating

4.10.1 The thickness of shell plating is to be in accordance with Table 4.22.3.

4.10.2 The thickness of the sheerstrake plating is to be increased in accordance with the Tables in way of areas where excessive wear may occur due to fishing operations. Alternative proposals to this requirement may be submitted for consideration prior to construction commencing.

4.10.3 Chine bars, where fitted, are to be solid round and of diameter as shown in Table 4.22.12.

4.10.4 Increased thickness shell insert plates, where over 3mm thicker than the connecting shell, are to be tapered at the edge over a slope of 1 in 3, to the thickness of the thinner plate. Insert plate corners are to have a minimum radius of five times the plate thickness.

4.10.5 Rubbing bars, where fitted, are to be of solid section and are to be continuously welded to the shell plating.

4.10.6 In vessels with a stern ramp or chute, the thickness of plating used in that area is to be increased in thickness by 30% greater than required by the Tables for side plating. Wear plates are to be fitted where accelerated abrasion is likely to occur. Alternative proposals to use abrasion-resistant steel may be considered.

4.10.7 Butts and seams in shell plating are to be so arranged as to provide a distance of 100mm from vertical and horizontal framing and structural connections, and in no instance is to exceed 150mm.

4.10.8 All shell plating butts and seams are to run clear of internal structural members. Consideration is to be given in the design of kit vessels to ensure all buts and seams are capable of being effectively welded.

Section 4.11 – Deck beams

4.11.1 Deck beams are to be in accordance with Table 4.22.7, fitted and bracketed to each transverse frame. Brackets and beam knees are to be in accordance with Figure 4.23.3 or equivalent. Established shipyard practices for brackets and knees may be accepted at the discretion of the Surveyor, provided equivalent strength is provided.

4.11.2 Beams in way of large deck openings (i.e. greater than 0.2B) and heavy deck equipment, are to be increased in depth by not less than twice the depth of the ordinary beams, as for web frames. All beams and girders in these areas are to be fully welded.

4.11.3 End brackets of deep web beams, where connected to longitudinal bulkheads or coamings, are to be as those required for deck girders.

4.11.4 Where the construction of the vessel is by use of a pre-cut kit assembly, the deck beams may be of the ring frame type as described at Paragraph 4.9.7.

Section 4.12 – Deck girders

4.12.1 Girders are to be in accordance with Table 4.22.9 and end brackets in accordance with Figure 4.23.4.

4.12.2 Girders are to extend over the full length of the deck, excepting where a longitudinal bulkhead is fitted at a similar position.

4.12.3 In vessels where construction is of the longitudinally framed system, consideration may be given for the use of longitudinal deck stiffening in conjunction with web frames/beams, subject to the prior submission and approval of details. Such web frames/beams are to be fitted at plate floor positions as detailed in Paragraph 4.4.2.

4.12.4 Where deck girders are scalloped for the passage of continuous deck beams, the depth of the girder is to be twice that of the beam, except where welded collars are fitted over beam/girder penetrations (see Figure 4.23.10).

4.12.5 Tripping brackets from beam to girder are to be fitted in way of pillars, and at every third frame space clear of pillars (see Figure 4.23.10).

4.12.6 Where a connection between girders of dissimilar metals is made, an insulating material is to be fitted between the girders and connected with bolts of compatible material or fitted with insulating ferrules/washers. Alternatively the joint may be transitioned using a bi-metallic welding strip connection.

Section 4.13 – Deck plating

4.13.1 The freeboard deck is to be of watertight construction and extend from stem to stern with positive freeboard throughout in any condition of loading of the vessel. The freeboard deck may be stepped, recessed or raised provided the stepped recessed or raised portion is of watertight construction.

4.13.2 The thickness of deck plating is to be not less than 6mm for steel and 8mm for aluminium alloy. Where frame spacing exceeds 500mm, the thickness of the deck plating is to be increased by 0.5mm per 100mm increase in spacing for steel, and 1mm per 100mm increase in spacing for aluminium alloy.

4.13.3 All openings in deck plating are to be adequately framed and with corners radiused to a minimum of 25mm.

4.13.4 Deck plating in way of masts, winches, machinery, gantries, etc., and all areas subjected to increased loads or stress, is to be increased in thickness and strengthened.

Section 4.14 – Deck sheathing

4.14.1 Wood sheathing, where fitted to a steel deck, is to be of an approved timber and fitted up to flat bar margins in way of all deck fittings and waterways. Margin bars are to be welded with a continuous sealing run to one side to prevent water ingress under the sheathing. The fastening of the deck sheathing is not to affect the integrity or strength of the deck plating.

4.14.2 Wood sheathing is to be laid in an approved bedding compound and secured by steel studs to the deck plating, spaced not more than the width of the beam spacing.

4.14.3 The securing nuts are to be recessed below the surface of the wood. Recesses for securing nuts are to be filled with edge grained dowels or suitable filling compound flush to the surface of the deck.

4.14.4 The sheathing is to be arranged with an acceptable shift of butts, caulked or otherwise sealed to prevent the ingress of water.

Section 4.15 – Pillars

4.15.1 Where the unsupported span of deck girders exceeds 4m, pillars, in accordance with Table 4.22.17, are to be fitted. Where pillars are to be omitted, webs are to be providing in accordance with Table 4.22.8 and associated notes.

4.15.2 In way of the fish hold, the hold pound stanchions may be accepted as meeting the requirements of pillars, subject to these being of equivalent section modulus and inertia, and that they are permanently attached to the hull and deck structures.

4.15.3 Details of pillars fitted in way of areas of local stress and heavy deck equipment are to be submitted for consideration.

4.15.4 Pillars may be of solid round, tubular or hollow square section, and are to be connected with brackets at the head and heel connections.

4.15.5 Pillars are to be positioned, whenever practicable, at the intersection of floors and longitudinal structural members at the bottom, and at the intersection of longitudinal deck girders and beams at the top. Where this is not practicable, or where positioned over floor or girder manholes, additional local stiffening is to be fitted to the approval of the Surveyor.

Section 4.16 – Bulkheads

4.16.1 Watertight bulkheads are to be fitted in all vessels as required by Part 3, Section 3.9.

4.16.2 The thickness of plating, stiffener spacing, and section modulus of stiffeners for watertight bulkheads are shown in Table 4.22.10.

Section 4.17 – Bulwarks and hand rails

4.17.1 The perimeter of any exposed deck and the top of any deckhouse is to be provided with a combination of bulwarks, guardrails or taut wires of sufficient strength and at a height of at least 1m. Bulwarks, rails or wires must be supported efficiently by stays or stanchions. The openings between the courses of any rail or wires should not exceed 230mm for the lowest course and 380mm for any other course. When application of such measures would impede the proper working of the vessel, equivalent safety measures may be considered.

4.17.2 Where there is a risk of any member of the crew falling through an opening in the deck, or from one deck to another, then so far as is reasonably practical protection, as in Paragraph 4.17.1, is to be provided.

4.17.3 Access to installations above the deck for operations or maintenance purposes is to be provided with guardrails or similar protection to prevent falls and to ensure the crew's safety. Where guardrails provide such protection, they are to be of the required height.

4.17.4 Where required for fishing operations, the height of the fixed bulwarks may be reduced providing portable rail arrangements are installed when not fishing to the regulatory height.

4.17.5 Plate bulwarks are to be fitted with a substantial top rail section fully welded thereto.

4.17.6 Bulwark stays of flat bar or flanged plate are to be fitted at alternate frames. Stays should be continuously welded to prevent corrosion, and where not landing above the deck beam, landed onto a substantial plate pad fully welded to the deck plating. Slots should be cut out of stay at deck for drainage.

4.17.7 Additional bulwark stays are to be fitted in way of gantries or gallows.

4.17.8 Plate thickness of fixed bulwarks is to be determined from Table 4.22.11.

4.17.9 On stern trawlers with ramps, the upper part of the ramp, is to be fitted with a gate or similar protective guard of the same height as the bulwarks or adjacent structure. Details of other openings in plate bulwarks are to be submitted for consideration.

Section 4.18 – Bilge keels

4.18.1 Bilge keels, where fitted, are to be of plate, flat bar, or bulb flat, suitably stiffened, radiused or tapered at ends, and arranged to terminate over an internal frame or stiffener. Bilge keels should not extend beyond the projected vertical line of the side plating at waterline level.

4.18.2 The hull plating is to be reinforced in way of the bilge keel by a welded flat bar with a thickness of not less than the adjoining shell plate and with a minimum width of 12 times thickness. The flat bar is to be secured to the hull with full continuous fillet weld. Welding of the bilge keel to the flat bar is to be by light continuous fillet (see Figure 4.23.7).

4.18.3 Bilge keels of an unusual design will be considered for approval prior to fitting.

Section 4.19 - Superstructures and deckhouses

4.19.1 On vessels fitted with steel or aluminium shelter decks above the main or freeboard deck, the plating sides and associated stiffeners should be determined from Tables 4.22.13 through to 4.22.16.

4.19.2 The shelter height is to be sufficient so as to provide adequate headroom, but should not obscure all round vision from the steering/navigation position, and are to comply fully with current statutory requirements for visibility ahead.

4.19.3 Full shelters are defined as those structures whose length extends from the stem to the stern, and whose width extends across the breadth of the vessel rail to rail.

4.19.4 Partial shelters are defined as enclosing a part of the deck forward, aft, or in the mid body, and which may extend the full breadth of the vessel.

4.19.5 Where the shelter volume is to be included in the vessel's stability criteria for the purpose of additional intact buoyancy, it is to be constructed weathertight (WT) as an enclosed superstructure, fitted with approved weathertight doors, hatches, and a means of draining the enclosed deck space.

4.19.6 Non-weathertight (NWT) shelters (which may extend full breadth over part or the whole of a vessel's length) should be fitted with freeing ports in accordance with current statutory requirements.

4.19.7 Where the shelter is to be left open at the end, consideration should be given to the installation of a full or partial bulkhead to prevent the passage of water to other parts of the deck and to minimise free surface effect.

4.19.8 Where shelters are left open at the end, consideration is to be given to the size and location of freeing ports to ensure the effects of free surface are minimised.

4.19.9 Decks and shelter tops in way of masts, derricks, machinery and other areas of additional deck loading, are to be strengthened with web frames or deep beams and pillars.

4.19.10 Where deck thicknesses are to be increased, deck inserts are to be used and are to have radius corners with a minimum radius of 10 times plate thickness. **Doublers are not to be used!**

4.19.11 Pillars are to be fitted such that the unsupported span of the deck girder does not exceed 3.5m. Pillars are also to be fitted in way of other areas subjected to additional loading.

4.19.12 Rails and stanchions are to be fitted to the tops of shelters and in way of all loading hatches (see Sections 4.17, 9.8 and Figure 9.31.1).

4.19.13 Gutting hatches or ports and offal chutes fitted in weathertight shelter sides, are to be fitted with a means of closing weathertight as described in Section 3.8.

4.19.14 The shelter top should have a non-slip surface.

4.19.15 In the case of vessels fitted with an enclosed shelter, an additional access from within to the shelter top is to be fitted to facilitate escape in an emergency. The position of the escape is to be agreed with the Surveyor and dimensions are to be not less than 600mm x 600mm.

4.19.16 Full length shelters should include the provision of a recessed ladderway in the construction at each side of the shelter. Recesses should have a minimum width of 500mm and continue from the shelter top position to the freeboard deck level (see Figure 4.23.12).

Section 4.20 - Scantlings tables

4.20.1 Throughout the Tables the letters L, B, and D represent the measurements as shown in Figures 4.23.1, and 4.23.2.

4.20.2 In determining scantlings from the Tables in respect of intermediate lengths, breadths and depths, the scantling applicable is to be that given for the next lower dimension, unless stated otherwise in the Table notes.

4.20.3 Where these Tables indicate plate thicknesses and scantlings of sections which are not commercially available, the next higher available thickness or scantling is to apply. In such cases the increased section modulus may be considered in determination of main scantlings.

4.20.4 Details of any alternative scantlings/sections proposed are to be submitted for consideration prior to construction.

Section 4.21 - Figures and illustrations

4.21.1 Illustrations shown in Figures 4.23.3 through to 4.23.12 are for guidance only. Alternative proposals to those shown may be accepted to the approval of the Surveyor.

4.22 Tables for steel and aluminium construction

4.22.1 Table 1: Keel and stem

Steel

Length L m	Bar		Plate		
	Keel mm	Stem mm	Keel		Stem mm
			Width mm	Thickness mm	
14	110 x 25	90 x 25	450	7	6
15	130 x 25	110 x 25	500	8	7
16	130 x 25	110 x 25	550	8	7
17	140 x 25	130 x 25	600	8	7
18	140 x 25	130 x 25	600	8	7
19	150 x 25	130 x 25	650	10	8
20	150 x 25	130 x 25	700	10	8
21	150 x 25	130 x 25	750	10	8
22	180 x 25	150 x 25	750	10	9
23	180 x 25	150 x 25	800	10	9
24	180 x 30	150 x 30	800	10	9
25	180 x 30	150 x 30	850	12	9
26	180 x 30	150 x 30	850	12	9
27	200 x 30	170 x 35	900	12	10
28	200 x 30	170 x 35	900	12	10

Refer to Notes after aluminium table on following page.

Aluminium

Length L M	Bar		Plate		
	Keel mm	Stem mm	Keel		Stem mm
			Width mm	Thickness mm	
14	130 x 38.1	100 x 38.1	510	9.5	8
15	140 x 38.1	130 x 38.1	590	10	9
16	140 x 38.1	130 x 38.1	650	10	9
17	150 x 38.1	140 x 38.1	700	10	9
18	150 x 38.1	140 x 38.1	700	10	9
19	160 x 38.1	140 x 38.1	760	12.7	10
20	160 x 38.1	140 x 38.1	820	12.7	10
21	160 x 38.1	140 x 38.1	870	12.7	10
22	200 x 38.1	160 x 38.1	870	12.7	12
23	200 x 38.1	160 x 38.1	930	12.7	12
24	210 x 38.1	160 x 38.1	930	12.7	12
25	210 x 38.1	160 x 38.1	1000	15	12
26	210 x 38.1	160 x 38.1	1000	15	12

Notes:-

1) Bar keels shall be continued to include the fore foot, and the reduction in scantling from the keel to the stem is to be tapered over a length of not less than 500mm.

2) Where stems are constructed of a combination of bar and plate, the bar stem may be continued at a reduced cross-section to the stem-head. The reduction in section is to be tapered as in Note (1) above.

3) The minimum widths of plate keels shown in the Table are at midships and may be tapered at ends to suit the stem plate or bar and stern skeg. Where it is intended to attach a box or ballast type keel to a plate keel, details are to be submitted for consideration.

4) Details of fabricated ballast and box type keels are to be submitted for consideration and approval prior to construction.

4.22 Tables for steel and aluminium construction

4.22.2 Table 2: Stern frame

Steel

Length L m	Stern post		Stern bar		Sole piece
	Minimum sectional area cm²	Minimum thickness mm	Minimum sectional area cm²	Minimum thickness mm	Minimum sectional area cm²
15	64	50	38	25	65
16	75	50	42	25	75
17	80	50	42	30	80
18	85	60	48	30	100
19	85	60	48	30	100
20	90	60	56	30	120
21	90	65	56	32	120
22	100	65	60	32	140
23	110	70	60	32	140
24	110	70	60	38	160
25	150	75	65	38	160
26	150	75	65	38	170
27	160	80	68	45	180
28	160	80	68	45	180

Aluminium

Length L M	Stern post		Stern bar		Sole piece
	Minimum sectional area cm²	Minimum thickness mm	Minimum sectional area cm²	Minimum thickness mm	Minimum sectional area cm²
15	109	63.5	65	38.1	111
16	128	63.5	72	38.1	128
17	136	63.5	72	38.1	136
18	145	76.2	82	38.1	170
19	145	76.2	82	38.1	170
20	153	76.2	96	38.1	204
21	153	80	96	40	204
22	170	80	102	40	238
23	187	90	102	40	238
24	187	90	102	50.8	272
25	255	101.6	111	50.8	272
26	255	101.6	111	50.8	289

Refer to Notes on following page.

4.22 Tables for steel and aluminium construction

4.22.2 Table 2: Stern frame *(continued)*

Notes:-

1) The above scantlings relate to a stern frame supported by plating on both sides. Where a single plate skeg is fitted, the minimum sectional area and thickness of the stern post shall be increased by 50%.

2) The sole piece may be of solid square, rectangular or T section.

3) The stern frame shall be suitably radiused or bracketed where the stern post meets the sole piece.

4) The propeller boss is to have a finished thickness of metal around the bore of at least 30% of the propeller shaft diameter.

5) Solid round sections, where used, are to be of equivalent cross-sectional area to those shown in the Table.

4.22 Tables for steel and aluminium construction

4.22.3 Table 3: Shell plating

Steel

Length L m	Shell thickness		
	General	Garboard bottom and bilge mm	Sheerstrake mm
15	7	7	7
16	7	7	7
17	7	7	7
18	7	8	7
19	7	8	7
20	7	8	7
21	8	8	8
22	8	8	8
23	8	9	8
24	8	9	9
25	8	9	9
26	8	9	9
27	8	9	9
28	8	9	9

Aluminium

Length L m	Shell thickness		
	General	Garboard bottom and bilge mm	Sheerstrake mm
15	9.5	9.5	9.5
16	9.5	9.5	9.5
17	9.5	9.5	9.5
18	9.5	10	9.5
19	9.5	10	9.5
20	9.5	10	9.5
21	10	10	10
22	10	10	10
23	10	12	10
24	10	12	12
25	10	12	12
26	10	12	12

Refer to Notes on following page.

4.22 Tables for steel and aluminium construction

4.22.3 Table 3: Shell plating *(continued)*

Notes:-

1) The plate thickness in the above Table is based on a transverse frame spacing of 500mm. Where the actual frame spacing differs, the thickness of the shell plating is to be increased at the rate of 0.25mm per 25mm of difference in the spacing, unless otherwise approved by the Surveyor.

2) The transom plating of stern fishing vessels is to be increased by a least 1mm above that required for the sheerstrake.

3) Side plating in way of gantries and gallows is to be increased by at least 1mm above Table value and locally reinforced to the Surveyor's satisfaction.

4) Plate thickness of box coolers and sea inlet boxes to be increased by 50% over the surrounding shell plate thickness.

5) Where plate thicknesses shown in the above Table are not available, the next higher available thickness should be utilised, or modulus calculations should be provided for approval of reduced thicknesses.

6) Where higher grade steel is proposed, a reduced plate thickness may be considered. Full details of steel grade is to be submitted for approval.

4.22 Tables for steel and aluminium construction

4.22.4 Table 4: Transverse floors

Steel

Depth D m	Floors	Face bars mm
	Minimum depth at centreline and thickness mm	
1.5	200 x 5	45 x 5
1.75	230 x 5	50 x 5
2	250 x 6	50 x 6
2.25	280 x 6	50 x 6
2.5	310 x 7	50 x 8
2.75	340 x 7	65 x 8
3	380 x 7	75 x 8
3.25	400 x 8	75 x 8
3.5	440 x 8	75 x 8
3.75	470 x 8	80 x 8
4	500 x 8	80 x 8
4.25	530 x 8	90 x 8
4.5	555 x 8	90 x 8
4.75	580 x 8	90 x 8
5	605 x 8	90 x 8
5.25	625 x 8	100 x 8
5.5	650 x 8	100 x 8
5.75	675 x 8	100 x 8
6	680 x 10	100 x 10
6.25	695 x 10	100 x 10
6.5	715 x 10	100 x 10
6.75	735 x 10	110 x 10
7	760 x 10	110 x 10

Refer to Notes after aluminium table on following page.

4.22 Tables for steel and aluminium construction

4.22.4 Table 4: Transverse floors (*continued*)

Aluminium

Depth D m	Floors: Minimum depth at centreline and thickness mm	Face bars mm
1.5	230 x 6.4	63.5 x 6.4
1.75	265 x 6.4	63.5 x 6.4
2	275 x 8	63.5 x 9.5
2.25	310 x 8	63.5 x 9.5
2.5	355 x 9.5	63.5 x 9.5
2.75	375 x 9.5	101.6 x 9.5
3	425 x 9.5	101.6 x 9.5
3.25	450 x 10	101.6 x 12.7
3.5	495 x 10	101.6 x 12.7
3.75	535 x 10	101.6 x 12.7
4	570 x 10	101.6 x 12.7
4.25	550 x 12.7	101.6 x 12.7
4.5	570 x 12.7	101.6 x 12.7
4.75	600 x 12.7	101.6 x 12.7
5	625 x 15.9	101.6 x 15.9
5.25	650 x 15.9	101.6 x 15.9

Notes:-

1) For depths ‘D’ below 2m, flanged plate floors may be substituted for welded webs and face bars.

2) Where the floor spacing exceeds 500mm, the thickness of floors is to be increased by not less than 0.25mm per 25mm difference in spacing.

3) The depth of floor should be maintained over as great a distance fore and aft as is practicable. Where there is a significant reduction in hull depth (e.g. aft accommodation), ‘D’ may be taken at that position.

4) For depth ‘D’ up to 3m, the thickness of plate floors in the engine room is to be increased by 1mm above the Table value, and for depth ‘D’ over 3m the floor thickness is to be increased by 20%. Face bars on such floors are to be increased in thickness to the same value.

5) Where the rise of the floor makes it necessary, the depth of the floors at the centreline is to be increased in order that the depth of floor 0.25 times the distance from the centreline to the outboard end of the floor is not less than 0.75 times the depth at the centreline.

6) The minimum height of floors in double bottom tanks is to be 650mm.

7) Lightening holes in girders and floors are to have face bars fitted, where the distance from shell plate is less than 150mm.

4.22 Tables for steel and aluminium construction

4.22.5 Table 5: Centre and side girders

Steel

Length L m	Centre girder			Side girders	
	Thickness of girder mm	Face bar mm		Thickness mm	Face bar mm
	With plate keel	Flat bar	Channel		
15	8	130 x 8	75 x 51	6	60 x 6
17	8	130 x 8	102 x 51	7	75 x 8
19	8	130 x 8	127 x 64	7	75 x 8
20	8	130 x 8	127 x 64	7	75 x 8
24	10	130 x 10	152 x 76	8	100 x 8
26	10	130 x 10	152 x 76	8	100 x 8
27	10	130 x 10	178 x 89	8	110 x 8
28	10	130 x 10	178 x 89	8	110 x 8

Aluminium

Length L M	Centre girder		Side girders	
	Thickness of girder mm	Face bar mm	Thickness mm	Face bar mm
	With plate keel	Flat bar		
15	10	152.4 x 12.7	8	63.5 x 9.5
17	10	152.4 x 12.7	9.5	101.6 x 9.5
19	10	152.4 x 12.7	9.5	101.6 x 9.5
20	10	152.4 x 12.7	9.5	101.6 x 9.5
24	12.7	152.4 x 12.7	10	127 x 12.7
26	12.7	152.4 x 12.7	10	127 x 12.7

Refer to Notes on following page

Notes:-

1) The depth of the centre girder is to be a minimum of that of the floors at the centreline (see Table 4.22.4) for single bottoms. Minimum depth for double bottoms (intended as a tank) is to be not less than 650mm.

2) In the engine room, the vertical plates of the engine seats will be accepted as an alternative to the centre girder provided that the continuity of longitudinal strength is maintained by an overlap at the ends of the centre girder and the engine seats.

3) The thickness of the centre girder and the cross-section areas of the face bars are to be not less than that of the floors. If necessary the Table values for the centre girders shall be increased to meet this requirement.

4) The face bar may be formed of channel where required for draining purposes. The dimensions of the channel web are to be a minimum of that required for the equivalent face bar.

5) Where it is proposed to utilise the side plate of an internal box/ballast keel in lieu of the centre girder, the keel sides are to be to the minimum height required for the floor plate at centreline, with face bars as required by the Table, and of a thickness equal to the garboard strake or that required by the above Table whichever is the greater.

4.22 Tables for steel and aluminium construction

4.22.6 Table 6: Transverse main frames

Steel

Depth D in metres	Height h in metres						
	1.75	**2**	**2.25**	**2.5**	**2.75**	**3**	**3.25**
2	50 x 50 x 6 80 x 8 FB (6) I/Y 16.7	60 x 50 x 6 90 x 8 FB (7) I/Y 20.2	**Angle** **Flat Bar** **(Shell thickness)** **I/Y**				
2.5	50 x 50 x 8 90 x 8 FB (7) I/Y 18.7	65 x 50 x 6 100 x 8 FB (7) I/Y 22.8	75 x 50 x 6 100 x 10 FB (7) I/Y 27.6	60 x 60 x 8 100 x 10 FB (8) I/Y 33.2			
3	60 x 50 x 6 90 x 8 FB (7) I/Y 20.6	60 x 50 x 6 100 x 8 FB (7) I/Y 25.2	75 x 50 x 6 100 x 10 FB (7) I/Y 30.6	75 x 50 x 8 110 x 10 FB (8) I/Y 36.8	70 x 70 x 8 120 x 10 FB (8) I/Y 43.8	75 x 75 x 8 120 x 12 FB (8) I/Y 51.6	
3.5	65 x 50 x 6 100 x 8 FB (7) I/Y 22.4	75 x 50 x 6 100 x 10 FB (7) I/Y 27.6	60 x 60 x 8 100 x 10 FB (8) I/Y 33.4	75 x 75 x 6 110 x 10 FB (8) I/Y 40.2	80 x 60 x 8 110 x 12 FB (8) I/Y 48.0	100 x 50 x 8 120 x 12 FB (8) I/Y 56.4	100 x 65 x 8 130 x 12 FB (8) I/Y 65.0
4	65 x 50 x 6 100 x 8 FB (8) I/Y 24.2	75 x 50 x 6 100 x 10 FB (8) I/Y 29.8	80 x 60 x 6 110 x 10 FB (8) I/Y 36.0	80 x 60 x 8 120 x 10 FB (8) I/Y 43.4	75 x 75 x 8 130 x 12 FB (8) I/y 51.1	100 x 65 x 7 130 x 12 FB (8) I/Y 60.7	100 x 65 x 8 140 x 12 FB (8) I/Y 69.0
4.5	65 x 50 x 6 100 x 8 FB (8) I/Y 25.9	60 x 60 x 8 100 x 10 FB (8) I/Y 32.0	75 x 50 x 8 110 x 10 FB (8) I/Y 38.4	80 x 60 x 8 120 x 10 FB (8) I/Y 46.5	100 x 50 x 8 120 x 12 FB (8) I/Y 55.6	100 x 65 x 8 130 x 12 FB (8) I/Y 64.8	100 x 75 x 8 140 x 12 FB (8) I/Y 74.6
5	75 x 50 x 6 (8) I/Y 27.1	75 x 50 x 8 (8) I/Y 34.1	80 x 60 x 8 (8) I/Y 41	80 x 65 x 8 (8) I/Y 49.8	90 x 70 x 8 (8) I/Y 59.6	100 x 50 x 10 (8) I/Y 69.2	100 x 65 x 10 (8) I/Y 79.6
5.5	75 x 50 x 6 (8) I/Y 28.9	75 x 50 x 8 (8) I/Y 36.6	80 x 60 x 8 (8) I/Y 43.8	100 x 50 x 8 (8) I/Y 53	100 x 65 x 8 (8) I/Y 63.7	100 x 75 x 8 (8) I/Y 73.5	100 x 75 x 10 (8) I/Y 84.6
6	75 x 50 x 7 (8) I/Y 30.8	75 x 50 x 8 (8) I/Y 38.8	80 x 60 x 8 (8) I/Y 46.7	100 x 50 x 8 (8) I/Y 56.3	100 x 65 x 8 (8) I/Y 67.1	100 x 65 x 10 (8) I/Y 77.9	100 x 75 x 10 (8) I/Y 89.6
6.5	75 x 50 x 7 (8) I/Y 32.5	80 x 60 x 8 (8) I/Y 41	90 x 60 x 8 (8) I/Y 49.7	100 x 65 x 8 (8) I/Y 59.4	100 x 75 x 8 (8) I/Y 70.8	100 x 75 x 10 (8) I/Y 82.2	100 x 75 x 10 (8) I/Y 94.4
7	75 x 50 x 8 (8) I/Y 34.4	80 x 60 x 8 (8) I/Y 43.3	100 x 50 x 8 (8) I/Y 52.3	100 x 65 x 8 (8) I/Y 62.6	100 x 75 x 8 (8) I/Y 74.5	100 x 75 x 10 (8) I/Y 86.6	120 x 75 x 10 (8) I/Y 99.1

Steel table continued on the following page

Steel table cont.

Depth D in metres	Height h in metres		
	3.5	**3.75**	**4**
2			
2.5			
3			
3.5	100 x 75 x 8 140 x 12 FB (8) I/Y 74.0	**Angle** **Flat Bar** **(Shell thickness)** **I/Y**	
4	100 x 65 x 10 150 x 12 (8) I/Y 79.6	100 x 75 x 10 150 x 15 FB (8) I/Y 89.6	125 x 75 x 8 150 x 15 FB (8) I/Y 100.1
4.5	100 x 100 x 8 150 x 12 FB (8) I/Y 84.6	100 x 100 x 8 150 x 15 FB (8) I/Y 95.2	125 x 75 x 8 150 x 15 FB (8) I/Y 103.2
5	100 x 75 x 10 (8) I/Y 89.7	120 x 75 x 10 (8) I/Y 100.8	120 x 75 x 10 (8) I/Y 111.6
5.5	100 x 75 x 10 (8) I/Y 94.9	120 x 75 x 10 (8) I/Y 106.2	120 x 75 x 10 (8) I/Y117.2
6	120 x 75 x 10 (8) I/Y 100.3	120 x 75 x 10 (8) I/Y 111.8	100 x 100 x 10 (8) I/Y 122.7
6.5	120 x 75 x 10 (8) I/Y 105.5	120 x 75 x 10 (8) I/Y 117.2	135 x 75 x 10 (8) I/Y 128.3
7	120 x 75 x 10 (8) I/Y 110.8	100 x 100 x 10 (8) I/Y 122.2	135 x 75 x 10 (8) I/Y 133.8

Refer to Notes after aluminium table on following page

4.22 Tables for steel and aluminium construction

4.22.6 Table 6: Transverse main frames *(continued)*

Aluminium

Depth D in metres	Height h in metres									
	1.75	2	2.25	2.5	2.75	3	3.25	3.5	3.75	4
2	76.2 x 50.8 x 6.4 101.6 x 9.5 FB (8) I/Y 28.4	76.2 x 50.8 x 6.4 88.9 x 12.7 FB (9.5) I/Y 34.4	Angle Flat Bar (Shell thickness) I/Y							
2.5	76.2 x 50.8 x 6.4 101.6 x 9.5 FB (9.5) I/Y 31.8	76.2 x 76.2 x 6.4 101.6 x 12.7 FB (9.5) I/Y 38.8	101.6 x 50.8 x 6.4 101.6 x 15.9 FB (9.5) I/Y 47.0	101.6 x 76.2 x 6.4 - (10) I/Y 56.5						
3	76.2 x 76.2 x 6.4 88.9 x 12.7 FB (9.5) I/Y 35.1	76.2 x 76.2 x 6.4 101.6 x 12.7 FB (9.5) I/Y 42.9	101.6 x 76.2 x 6.4 101.6 x 15.9 FB (9.5) I/Y 52.1	101.6 x 76.2 x 6.4 - (10) I/Y 62.6	101.6 x101.6 x 6.4 - (10) I/Y 74.5	88.9 x 88.9 x 9.5 - (10) I/Y 87.8				
3.5	76.2 x 76.2 x 6.4 101.6 x 12.7 FB (9.5) I/Y 38.1	101.6 x 50.8 x 6.4 101.6 x 15.9 FB (9.5) I/Y 47.0	101.6 x 76.2 x 6.4 - (10) I/Y 56.8	101.6 x101.6 x 6.4 - (10) I/Y 68.4	101.6 x101.6 x 6.4 - (10) I/Y 81.6	101.6 x101.6 x 9.5 - (10) I/Y 95.9	101.6 x101.6 x 9.5 - (10) I/Y 110.5	152.4 x 76.2 x 9.5 - (10) I/Y 125.8		
4	76.2 x 76.2 x 6.4 - (10) I/Y 41.2	101.6 x 50.8 x 6.4 - (10) I/Y 50.7	101.6 x 76.2 x 6.4 - (10) I/Y 61.2	101.6 x101.6 x 6.4 - (10) I/Y 73.8	88.9 x 88.9 x 9.5 - (10) I/Y 86.9	101.6 x101.6 x 9.5 - (10) I/Y 103.2	152.4 x 76.2 x 9.5 - (10) I/Y 117.3	152.4 x 76.2 x 9.5 - (10) I/Y 135.4	152.4 x 76.2 x 9.5 - (10) I/Y 152.4	152.4 x152.4 x12.7 - (10) I/Y 170.2
4.5	76.2 x 76.2 x 6.4 - (10) I/Y 44.1	101.6 x 76.2 x 6.4 - (10) I/Y 54.4	101.6 x 76.2 x 6.4 - (10) I/Y 65.3	101.6 x101.6 x 6.4 - (10) I/Y 79.1	101.6 x101.6 x 9.5 - (10) I/Y 94.6	101.6 x101.6 x 9.5 - (10) I/Y 110.2	152.4 x 76.2 x 9.5 - (10) I/Y 126.9	152.4 x 76.2 x 9.5 - (10) I/Y 143.9	152.4 x 76.2 x 9.5 - (10) I/Y 161.9	152.4 x152.4 x12.7 - (10) I/Y 175.5

Refer to Notes on following page.

4.22 Tables for steel and aluminium construction

4.22.6 Table 6: Transverse main frames *(continued)*

Notes:-

1) Sections stated are those stock sizes produced equivalent to or greater than the section moduli given, and the section sizes in the Table may be varied provided the relevant section modulus is not reduced.

2) Section dimensions are in mm and section moduli are in cm^3.

3) The section moduli are calculated with attached shell plating of thicknesses given in brackets immediately following the section dimension and a frame spacing of 500mm. Where the actual spacing is varied, the section modulus is to be increased or decreased in direct proportion, but in no circumstances should the frame spacing exceed 650mm.

4) Height 'h' in the Table is vertical depth of the frame measured from the top of the frame floor or inner bottom to the top of the deck beam at side as shown in Figure 4.23.2.

5) At the ends of the vessel where panel size may increase with shape, the strength is to be maintained by the introduction of additional stiffeners or by an increase in frame scantlings as per Note (3).

4.22 Tables for steel and aluminium construction

4.22.7 Table 7: Deck beams

Steel

Breadth B	Section modulus (cm³)	Suggested section (mm)	
		Angle	Flat bar
4.5	14.3	50 x 40 x 6	75 x 8
5	17	50 x 50 x 6	80 x 8
5.5	20.5	65 x 50 x 6	90 x 8
6	24.5	65 x 50 x 6	100 x 8
6.5	29	75 x 50 x 6	100 x 10
7	34	75 x 60 x 6	100 x 12
7.5	38	75 x 65 x 6	100 x 12
8	42.5	70 x 70 x 8	-
8.5	48	80 x 60 x 8	-
9	55	80 x 80 x 7	-
9.5	60	80 x 80 x 8	-
10	67	100 x 65 x 8	-

Aluminium

Breadth B	Section modulus (cm³)	Suggested section (mm)	
		Angle	Flat bar
4.5	24.4	63.5 x 50.8 x 6.4	101.6 x 9.5
5	28.9	76.2 x 50.8 x 6.4	101.6 x 9.5
5.5	34.9	76.2 x 76.2 x 6.4	101.6 x 12.7
6	41.7	76.2 x 76.2 x 6.4	101.6 x 12.7
6.5	49.3	101.6 x 76.2 x 6.4	-
7	57.8	101.6 x 76.2 x 6.4	-
7.5	64.6	101.6 x 101.6 x 6.4	-
8	72.3	101.6 x 101.6 x 6.4	-
8.5	81.6	88.9 x 88.9 x 9.5	-
9	93.5	101.6 x 101.6 x 9.5	-
9.5	102	101.6 x 101.6 x 9.5	-
10	113.9	152.4 x 76.2 x 9.5	-

Refer to Notes on following page.

4.22 Tables for steel and aluminium construction

4.22.7 Table 7: Deck beams *(continued)*

Notes:-

1) Deck beams shall be fitted at every frame and should be connected to the frames by brackets in accordance with Part 7, Figure 4.23.3.

2) Deck beams are to be fitted in association with longitudinal deck girders and, where necessary, pillars (see Table 4.22.16).

3) The dimensions of the sections given in the Table may be modified to suit stock sizes provided the section modulus is not reduced.

4) The Table section moduli are based on a spacing of 500mm. Where the spacing is varied, the moduli is to be increased in direct proportion.

4.22 Tables for steel and aluminium construction

4.22.8 Table 8: Deep web beams

Steel

Breadth B m	Deep Web beam spacing m								
	2	2.25	2.5	2.75	3	3.25	3.5	3.75	4
5	I/Y 256	I/Y 288	I/Y 320	I/Y 352	I/Y 384	I/Y 416	I/Y 448	I/Y 480	I/Y 512
5.5	I/Y 315	I/Y 355	I/Y 394	I/Y 434	I/Y 473	I/Y 513	I/Y 552	I/Y 591	I/Y 631
6	I/Y 389	I/Y 438	I/Y 486	I/Y 535	I/Y 584	I/Y 632	I/Y 681	I/Y 729	I/Y 778
6.5	I/Y 473	I/Y 532	I/Y 591	I/Y 650	I/Y 709	I/Y 768	I/Y 827	I/Y 886	I/Y 945
7	I/Y 576	I/Y 648	I/Y 720	I/Y 792	I/Y 864	I/Y 936	I/Y 1008	I/Y 1080	I/Y 1152
7.5	I/Y 693	I/Y 780	I/Y 867	I/Y 953	I/Y 1040	I/Y 1126	I/Y 1213	I/Y 1300	I/Y 1386
8	I/Y 789	I/Y 887	I/Y 986	I/Y 1085	I/Y 1183	I/Y 1282	I/Y 1380	I/Y 1479	I/Y 1577
8.5	I/Y 904	I/Y 1017	I/Y 1130	I/Y 1243	I/Y 1356	I/Y 1469	I/Y 1582	I/Y 1695	I/Y 1808
9	I/Y 1021	I/Y 1149	I/Y 1277	I/Y 1404	I/Y 1532	I/Y 1660	I/Y 1787	I/Y 1915	I/Y 2043
9.5	I/Y 1146	I/Y 1290	I/Y 1433	I/Y 1576	I/Y 1720	I/Y 1863	I/Y 2006	I/Y 2150	I/Y 2293
10	I/Y 1280	I/Y 1440	I/Y 1600	I/Y 1760	I/Y 1920	I/Y 2080	I/Y 2240	I/Y 2400	I/Y 2560

Refer to Notes on following page.

4.22 Tables for steel and aluminium construction

4.22.8 Table 8: Deep web beams (continued)

Notes:-

1) The deep beam web table provides the section modulus requirements for transverse beam sections being fitted in lieu of pillars.

2) The section modulus of deep web frames in way of deep web beams is to be at least 4 times that required for ordinary frames.

3) Web corner connections are to be bracketed in accordance with 4.23.3.

4) The Table moduli are based on a beam spacing of 500mm.

4.22 Tables for steel and aluminium construction

4.22.9 Table 9: Deck girders (Revised – March 2020)

Steel

Breadth B m	Girder Span m				
	2	**2.5**	**3**	**3.5**	**4**
5	I/Y 46	I/Y 73	I/Y 105	I/Y 142	I/Y 186
6	I/Y 56	I/Y 87	I/Y 125	I/Y 170	I/Y 222
7	I/Y 65	I/Y 101	I/Y 146	I/Y 199	I/Y 259
8	I/Y 74	I/Y 116	I/Y 167	I/Y 227	I/Y 297
9	I/Y 83	I/Y 130	I/Y 188	I/Y 256	I/Y 334
10	I/Y 93	I/Y 145	I/Y 209	I/Y 284	I/Y 371

Aluminium

Breadth B m	Girder Span m				
	2	**2.5**	**3**	**3.5**	**4**
5	I/Y 63.6	I/Y 100.9	I/Y 145.1	I/Y 196.3	I/Y 257.1
6	I/Y 77.4	I/Y 120.3	I/Y 172.8	I/Y 235	I/Y 306.9
7	I/Y 89.9	I/Y 139.6	I/Y 201.8	I/Y 275.1	I/Y 358
8	I/Y 102.3	I/Y 160.4	I/Y 230.9	I/Y 313.8	I/Y 410.6
9	I/Y 114.7	I/Y 179.7	I/Y 259.9	I/Y 353.9	I/Y 461.7
10	I/Y 128.6	I/Y 200.4	I/Y 288.9	I/Y 392.6	I/Y 512.9

Refer to Notes on following page.

4.22 Tables for steel and aluminium construction

4.22.9 Table 9: Deck girders (Revised – March 2020) - *continued*

Notes:-

1) Maximum spacing of girders should not exceed B/3; consideration may be given to the fitting of additional girders to those required in the Tables, or surrounding structures providing equal support to that of pillars; in such cases a reduced section may be permitted.

2) The unsupported span of girders is not to exceed 4m.

3) The Table moduli are based on a beam spacing of 500mm. Where the beam spacing is varied, the section modulus of the girder is to be varied in direct proportion.

4) The thickness of the girder is not to be less than that of the deck beams.

5) Where the girder web is notched over the deck beams, the depth of the girder web should be not less than twice that of the beams, excepting where the notch is filled by a fully welded closing plate. Girders fitted in association with flat bar beams are to be welded to the beams.

6) For continuity, longitudinal strength girders are to be fitted with brackets at the transom and bulkheads. The depth and length of the brackets are to be as shown in Section 4.23.4.

7) Moduli for intermediate breadths and spans are to be obtained by interpolation.

4.22 Tables for steel and aluminium construction

4.22.10 Table 10: Watertight bulkheads

Steel

Depth of bulkhead at centreline m	Thickness of plating mm	Section modulus of stiffeners (I/Y cm^3)	Stiffener sections meeting modulus required	
			Angle mm	Flat bar mm
1	5	4.4	-	50 x 5
1.25	5	6.2	-	60 x 5
1.5	5	7.5	-	60 x 6
1.75	5	9.1	40 x 40 x 5	70 x 6
2	6	12	45 x 45 x 5	70 x 8
2.25	6	15	50 x 40 x 6	75 x 8
2.5	6	17.7	50 x 50 x 6	75 x 10
2.75	6	21.3	65 x 50 x 5	80 x 10
3	6.5	26	60 x 60 x 6	90 x 10
3.25	6.5	30.6	75 x 50 x 6	100 x 10
3.5	6.5	35	70 x 70 x 6	100 x 12
3.75	6.5	41	75 x 75 x 6	110 x 12
4	8	48	80 x 60 x 8	110 x 12
4.25	8	54.4	80 x 80 x 8	-
4.5	8	59.6	80 x 80 x 8	-
4.75	8	61.5	80 x 80 x 8	-
5	8	63.5	80 x 80 x 8	-
5.25	8	67.5	80 x 80 x 9	-

Refer to Notes after aluminium table on following page.

4.22 Tables for steel and aluminium construction

4.22.10 Table 10: Watertight bulkheads *(continued)*

Aluminium

Depth of bulkhead at centreline m	Thickness of plating mm	Section modulus of stiffeners (I/Y cm^3)	Stiffener sections meeting modulus required	
			Angle mm	Flat bar mm
1	6	7.5	-	63.5 x 6.4
1.25	6	10.6	-	76.2 x 6.4
1.5	6	12.8	44.5 x 44.5 x 6.4	76.2 x 6.4
1.75	6	15.5	50.8 x 50.8 x 6.4	76.2 x 9.5
2	8	20.4	63.5 x 38.1 x 6.4	76.2 x 12.7
2.25	8	25.5	76.2 x 50.8 x 6.4	76.2 x 12.7
2.5	8	30.1	76.2 x 50.8 x 6.4	101.6 x 9.5
2.75	8	36.3	76.2 x 76.2 x 6.4	101.6 x 12.7
3	8	44.2	76.2 x 76.2 x 6.4	127 x 12.7
3.25	8	52.1	101.6 x 76.2 x 6.4	127 x 12.7
3.5	8	59.5	101.6 x 76.2 x 6.4	127 x 12.7
3.75	8	69.7	101.6 x 101.6 x 6.4	152.4 x 12.7
4	10	81.6	101.6 x 101.6 x 6.4	152.4 x 12.7
4.25	10	92.5	101.6 x 101.6 x 9.5	152.4 x 12.7
4.5	10	101.4	101.6 x 101.6 x 9.5	-
4.75	10	104.6	101.6 x 101.6 x 9.5	-
5	10	108	101.6 x 101.6 x 9.5	-
5.25	10	114.8	101.6 x 101.6 x 9.5	-

Refer to Notes on following page.

4.22 Tables for steel and aluminium construction

4.22.10 Table 10: Watertight bulkheads *(continued)*

Notes:-

1) The moduli of stiffeners in the Table are based on a stiffener spacing of 500mm. If the spacing is varied, the modulus is to be varied in direct proportion.
2) The stiffener sections given in the Table may be varied provided the section moduli are not reduced.
3) Where the depth of the bulkhead at any stiffener is less than 2.5m, brackets or other end connections may be omitted. Bracket or other approved end connections should be fitted at the top and bottom of stiffeners where the depth of the bulkhead locally is 2.5m or more. Regardless of the depth of the bulkhead, stiffeners should always be connected to deck girders by flanged brackets and the stiffeners of bulkheads so spaced as to make this possible.
4) For details of bracket connections see Figure 4.23.4.
5) The thickness of bulkhead plating, in way of bilge wells and slush wells, is to be increased by 2mm above the Table value, but need not be increased beyond the thickness of the outer bottom plating locally.
6) The thickness of collision bulkhead plating is to be increased by 1mm above the Table value, and the modulus of the stiffeners should be increased by not less than 25% above the Table value.

4.22 Tables for steel and aluminium construction

4.22.11 Table 11: Bulwark plating and bulwark stays

Steel

Length L m	*Thickness of bulwark plating mm*		I/Y of bulwark rail cm^3		
	In way of gallows and transom	Elsewhere	Height of fixed plate bulwarks mm		
			600	750	1000
15	8	6	16.8	26.5	49
18	8	6.5	16.8	26.5	49
21	8	6.5	16.8	26.5	49
26	10	7	16.8	26.5	49
27	10	7	16.8	26.5	49
28	10	7	16.8	26.5	49

Aluminium

Length L m	*Thickness of bulwark plating mm*		I/Y of bulwark rail cm^3		
	In way of gallows and transom	Elsewhere	Height of fixed plate bulwarks mm		
			600	750	1000
15	10	8	28.6	45.1	83.3
18	10	8	28.6	45.1	83.3
21	10	8	28.6	45.1	83.3
26	12.7	9.5	28.6	45.1	83.3

Refer to Notes on following page.

4.22 Tables for steel and aluminium construction

4.22.11 Table 11: Bulwark plating and bulwark stays *(continued)*

Notes:-

1) Where stays consist of a flanged flat plate, the flanged width should be not less than 50mm and the plate thickness not less than that of the bulwark plating locally. Where an alternative thickness is proposed, details are to be submitted for consideration.

2) Only the section of the bulwark stay that is welded to the deck is to be used when determining the modulus of the stay.

3) Where length 'L' is between those shown in the Table, the thickness is to be that shown for the nearest length.

4) Where the shell plating is extended to bulwark height, the bulwark thickness may be that required for the shell plating except in way of gallows, subject to the approval of the Surveyor.

5) Stays are to be fitted at each frame if shelter fitted.

6) Stays should be spaced at alternate frames in way of open bulwarks.

7) Stays should be fitted at every frame space at hauling position.

4.22 Tables for steel and aluminium construction

4.22.12 Table 12: Chine bars

Steel

Length L m	Diameter mm
14	32
17	40
20	45
23	50
26	55
28	60

Aluminium

Length L m	Diameter mm
14	41.3
17	50.8
20	54
23	60.3
26	66.7

Notes:-

1) When the length 'L' falls between those given in the Table, the diameter of the bars is to be to the next higher length.

2) Diameters shown are for solid round section. Proposals for the use of alternative sections are to be submitted for consideration and approval, provided they are of solid section.

3) For details of chine bar connections, see Figure 4.23.11.

4.22 Tables for steel and aluminium construction

4.22.13 Table 13: Shelter deck beams

Steel

Breadth B	(Modulus cm³) - recommended scantling									Frame spacing mm
	Full shelter						Partial shelter			
	Weathertight (WT)			Non-weathertight						
4	(7.4)	65 x 6	FB	(5.9)	65 x 5	FB	(4.4)	50 x 5	FB	500
4.5	(8.3)	65 x 6	FB	(6.6)	65 x 5	FB	(4.9)	50 x 6	FB	500
5	(9.2)	75 x 6	FB	(7.4)	65 x 6	FB	(5.5)	65 x 5	FB	500
5.5	(10.1)	75 x 6	FB	(8.2)	65 x 6	FB	(6)	65 x 5	FB	500
6	(13.2)	75 x 10	FB	(10.5)	75 x 6	FB	(7.9)	65 x 6	FB	500
6.5	(17.5)	75 x 10	FB	(14)	75 x 10	FB	(10.5)	75 x 6	FB	500
7	(21.8)	65 x 50 x 6	IA	(17.5)	75 x 10	FB	(13)	75 x 10	FB	500
7.5	(26.8)	65 x 50 x 6	IA	(21.5)	65 x 50 x 6	IA	(16)	75 x 10	FB	500
8	(34)	76 x 50 x 6	IA	(26)	65 x 50 x 6	IA	(20.3)	65 x 38 x 6	IA	500
8.5	(36)	70 x 70 x 6	IA	(26)	65 x 50 x 6	IA	(21.5)	65 x 50 x 6	IA	500
9	(36)	70 x 70 x 6	IA	(26)	65 x 50 x 6	IA	(26)	65 x 50 x 6	IA	500
9.5	(50)	80 x 80 x 6	IA	(36)	70 x 70 x 6	IA	(26)	65 x 50 x 6	IA	500
10	(50)	80 x 80 x 6	IA	(36)	70 x 70 x 6	IA	(26)	65 x 50 x 6	IA	500

Aluminium

Breadth B	(Modulus cm³) - recommended scantling								
	Full shelter						Partial shelter		
	Weathertight (WT)			Non-weathertight					
4	(12.5)	76.2 x 6.4	FB	(10)	76.2 x 6.4	FB	(7.5)	63.5 x 6.4	FB
4.5	(14)	76.2 x 9.5	FB	(11.2)	76.2 x 6.4	FB	(8.4)	63.5 x 6.4	FB
5	(15.6)	76.2 x 9.5	FB	(12.5)	76.2 x 6.4	FB	(9.4)	63.5 x 6.4	FB
5.5	(20.6)	63.5 x 38.1 x 6.4	IA	(13.8)	76.2 x 9.5	FB	(10.3)	76.2 x 6.4	FB
6	(22.4)	63.5 x 50.8 x 6.4	IA	(20.6)	63.5 x 38.1 x 6.4	IA	(13.4)	76.2 x 6.4	FB
6.5	(29.6)	76.2 x 50.8 x 6.4	IA	(23.7)	63.5 x 50.8 x 6.4	IA	(20.6)	63.5 x 38.1 x 6.4	IA
7	(37)	76.2 x 76.2 x 6.4	IA	(29.6)	63.5 x 50.8 x 6.4	IA	(22.2)	63.5 x 50.8 x 6.4	IA
7.5	(45.5)	101.6 x 76.2 x 6.4	IA	(36.4)	76.2 x 76.2 x 6.4	IA	(27.3)	76.2 x 50.8 x 6.4	IA
8	(57.7)	101.6 x 76.2 x 6.4	IA	(46)	101.6 x 76.2 x 6.4	IA	(34.5)	76.2 x 76.2 x 6.4	IA
8.5	(61.2)	101.6 x 76.2 x 6.4	IA	(46)	101.6 x 76.2 x 6.4	IA	(36.4)	76.2 x 76.2 x 6.4	IA
9	(61.2)	101.6 x 76.2 x 6.4	IA	(46)	101.6 x 76.2 x 6.4	IA	(46)	101.6 x 76.2 x 6.4	IA
9.5	(85)	101.6 x 76.2 x 9.5	IA	(61.2)	101.6 x 76.2 x 6.4	IA	(46)	101.6 x 76.2 x 6.4	IA
10	(85)	101.6 x 76.2 x 9.5	IA	(61.2)	101.6 x 76.2 x 6.4	IA	(46)	101.6 x 76.2 x 6.4	IA

Refer to Notes on following page.

4.22 Tables for steel and aluminium construction

4.22.13 Table 13: Shelter deck beams *(continued)*

Notes:-

1) The moduli shown are based on girders spaced *B/3* apart. If the unsupported span of beams is greater, the following correction is to be applied:-

$$New\ modulus = \frac{Table\ modulus\ x\ S^2}{(B/3\ )^2}\ cm^3$$

Where *B* = Breadth of vessel; *S* = unsupported span of beam.

2) Where frame spacing is other than 500mm, the modulus is to be modified by 10% for each 50mm difference in spacing.

3) Alternative sections giving equal moduli may be used.

4) *B/3* or *S*, unsupported span of beam, shall not be less than 1.83m.

4.22 Tables for steel and aluminium construction

4.22.14 Table 14: Shelter deck girders

Steel

Modulus cm³ – recommended scantling								
Spacing of girders m	Distance between girder supports (metres)							
	2		2.5		3		3.5	
Weathertight								
1	43	100 x 50 x 6 (IA)	67	100 x 100 x 6 (IA)	96	150 x 75 x 10 (IA)	132	100 x 75 x 10 (IA)
2	57	100 x 75 x 6 (IA)	89	150 x 75 x 10 (IA)	129		175	200 x 100 x 10 (IA)
2.5	71	100 x 100 x 6 (IA)	112		161		219	
3	86.2	150 x 75 x 10 (IA)	134		193	200 x 100 x 10 (IA)	262	
Non-weathertight								
1	25.8	65 x 50 x 6 (IA)	40.2	100 x 50 x 6 (IA)	57.6	100 x 75 x 6 (IA)	79.2	100 x 100 x 6 (IA)
2	34.2	100 x 50 x 6 (IA)	53.4	100 x 75 x 6 (IA)	77.4	100 x 100 x 6 (IA)	105	150 x 75 x 10 (IA)
2.5	42.6		67.2	100 x 100 x 6 (IA)	96.6	150 x 75 x 10 (IA)	131.4	
3	51.6	100 x 75 x 6 (IA)	80.4		115.8		157.2	
Partial shelters								
1	19.3	65 x 50 x 6 (IA)	30.1	75 x 50 x 6 (IA)	43.3	100 x 50 x 6 (IA)	59	100 x 75 x 6 (IA)
2	25.7		40.1	100 x 50 x 6 (IA)	57.8	100 x 75 x 6 (IA)	78.6	100 x 100 x 6 (IA)
2.5	32.1	100 x 75 x 6 (IA)	50.1		72.2	100 x 100 x 6 (IA)	98.2	100 x 75 x 10
3	38.5	75 x 75 x 6 (IA)	60.2	100 x 75 x 6 (IA)	86.6	150 x 75 x 10 (IA)	117.9	

Aluminium

Modulus cm³ – recommended scantling								
Spacing of girders m	Distance between girder supports (metres)							
	2		2.5		3		3.5	
Weathertight								
1	73	101.6 x 101.6 x 6.4 (IA)	114	152.4 x 76.2 x 9.5 (IA)	163	200 x 100 x 9.5 (IA)	224	200 x 100 x 9.5 (IA)
2	97	152.4 x 76.2 x 9.5 (IA)	151		219		298	250 x 100 x 9.5 (IA)
2.5	121		190.5	200 x 100 x 9.5 (IA)	274		372	
3	146.2		228		328	250 x 100 x 9.5 (IA)	445	250 x 100 x 12 (IA)
Non-weathertight								
1	43.9	101.6 x 50.8 x 6.4 (IA)	68.4	101.6 x 101.6 x 6.4 (IA)	98	152.4 x 76.2 x 9.5 (IA)	134.7	152.4 x 76.2 x 9.5 (IA)
2	58.2	101.6 x 76.2 x 6.4 (IA)	90.8	152.4 x 76.2 x 9.5 (IA)	131.6		178.5	200 x 100 x 9.5 (IA)
2.5	72.5	101.6 x 101.6 x 6.4 (IA)	114.3		164.3	200 x 100 x 9.5 (IA)	223.4	
3	87.8	152.4 x 76.2 x 9.5 (IA)	136.7		196.9		267.2	
Partial shelters								
1	25.7	63.5 x 50.8 x 6.4 (IA)	40.1	101.6 x 50.8 x 6.4 (IA)	57.7	101.6 x 76.2 x 6.4 (IA)	78.6	101.6 x 101.6 x 6.4 (IA)
2	34.2	76.2 x 50.8 x 6.4 (IA)	53.5	101.6 x 76.2 x 6.4 (IA)	77	101.6 x 101.6 x 6.4 (IA)	104.7	152.4 x 76.2 x 6.4 (IA)
2.5	42.8	101.6 x 50.8 x 6.4 (IA)	66.8	101.6 x 101.6 x 6.4 (IA)	96.2	152.4 x 76.2 x 6.4 (IA)	130.9	
3	51.3	101.6 x 76.2 x 6.4 (IA)	80.2		115.4		157.1	

Refer to Notes on following page.

4.22 Tables for steel and aluminium construction

4.22.14 Table 14: Shelter deck girders

Notes:-

1) Maximum spacing of girders should not exceed B/3.
2) The unsupported span of girder should not exceed 3.5m.
3) Tripping brackets are to be fitted at least every thirds beam.
4) Pillars supporting girders are to be adequately supported at the top and at the deck.
5) Where the girder web is cut over the deck beams, the depth of the girder web should be not be less than 50mm greater than that of the beams.
6) Ends of the girders shall be bracketed to the satisfaction of the Surveyor.
7) Moduli for intermediate spans are to be obtained by interpolation.

4.22 Tables for steel and aluminium construction

4.22.15 Table 15: Shelter deck side and deck plating

Shelter [side] plating (steel)						
Length of vessel LOA m	Weathertight		Non–weathertight		Partial	
	Thickness mm	Maximum stiffener spacing mm	Thickness mm	Maximum stiffener spacing mm	Thickness mm	Maximum stiffener spacing mm
15 - <20	5	500	5	500	5	500
20 < 28	6	500	5	500	5	500

Shelter [side] plating (aluminium)						
Length of vessel LOA m	Weathertight		Non–weathertight		Partial	
	Thickness mm	Maximum stiffener spacing mm	Thickness mm	Maximum stiffener spacing mm	Thickness mm	Maximum stiffener spacing mm
15 < 28	8	500	6	500	6	500

Shelter [deck] plating (steel)						
Length of vessel LOA m	Weathertight		Non-weathertight		Partial	
	Thickness mm	Beam spacing mm	Thickness mm	Beam spacing mm	Thickness mm	Beam spacing mm
15 - <20	6	500	6	500	5	500
20 < 28	6.5	500	6	500	5	500

Shelter [deck] plating (aluminium)						
Length of vessel LOA m	Weathertight		Non-weathertight		Partial	
	Thickness mm	Beam spacing mm	Thickness mm	Beam spacing mm	Thickness mm	Beam spacing mm
15 - <28	8	500	6	500	6	500

Refer to Notes on following page.

4.22 Tables for steel and aluminium construction

4.22.16 Table 16: Weathertight/non-weathertight and partial shelter side stiffeners

Steel and Aluminium alloy

Steel		
Depth D m	**Modulus cm^3**	**Recommended scantlings**
1.5	6.3	65 x 5 (FB)
2	8.4	65 x 6 (FB)
2.5	10.5	75 x 6 (FB)
3	12.6	75 x 10 (FB)
3.5	14.7	65 x 38 x 6 (IA)
4	16.8	
4.5	18.8	
Aluminium		
Depth D m	**Modulus cm^3**	**Recommended scantlings**
1.5	10.7	76.2 x 6.4 (FB)
2	14.2	63.5 x 38.1 x 6.4 (IA)
2.5	17.8	
3	21.4	63.5 x 63.5 x 6.4 (IA)
3.5	25	
4	28.5	
4.5	32	76.2 x 50.8 x 6.4

Notes:-

1) Where the stiffener/beam spacing differs from the values given in the Tables, the plating thickness is to be increased at the rate of 0.25mm per 20mm spacing difference.

4.22 Tables for steel and aluminium construction

4.22.17 Table 17: Pillars

Steel – Solid Round

Factor N	Diameter of pillar mm	Length of pillar m				
		2	2.5	3	3.5	4
3		50	60	60	60	65
4		60	60	60	65	70
6		60	60	65	70	75
8		60	65	70	75	80
10		65	70	80	80	85
13		65	70	80	85	90
16		70	75	80	90	90
20		70	80	85	90	95
24		75	80	90	95	100
29		80	85	90	100	105

Steel – Square Hollow Section

Factor N	Section size in mm	Length of pillar m				
		2	2.5	3	3.5	4
3		63.5 x 6.4	63.5 x 6.4	63.5 x 6.4	63.5 x 6.4	76.2 x 6.4
4		63.5 x 6.4	63.5 x 6.4	63.5 x 6.4	76.2 x 6.4	76.2 x 6.4
6		63.5 x 6.4	63.5 x 6.4	76.2 x 6.4	76.2 x 6.4	80 x 6.4
8		63.5 x 6.4	76.2 x 6.4	76.2 x 6.4	80 x 6.4	90 x 6.4
10		76.2 x 6.4	76.2 x 6.4	90 x 6.4	90 x 6.4	100 x 6.4
13		76.2 x 6.4	76.2 x 6.4	90 x 6.4	100 x 6.4	100 x 8
16		76.2 x 6.4	80 x 6.4	90 x 6.4	100 x 8	100 x 8
20		76.2 x 6.4	90 x 6.4	100 x 6.4	100 x 8	100 x 10
24		80 x 6.4	90 x 6.4	100 x 8	100 x 10	120 x 6.4
29		90 x 6.4	100 x 6.4	100 x 8	120 x 6.4	120 x 8

Refer to Notes after aluminium tables on following page.

4.22 Tables for steel and aluminium construction

4.22.17 Table 17: Pillars *(continued)*

Aluminium – solid round

Factor N	Diameter of pillar mm	Length of pillar m				
		2	2.5	3	3.5	4
3		66.7	82.6	82.6	82.6	88.9
4		82.6	82.6	82.6	88.9	95.3
6		82.6	82.6	88.9	95.3	101.6
8		82.6	88.9	95.3	101.6	108
10		88.9	95.3	108	108	114.3
13		88.9	95.3	108	114.4	120.7
16		95.3	101.6	108	120.7	120.7
20		95.3	108	114.3	120.7	127
24		101.6	108	120.7	127	133.4
29		108	114.3	120.7	133.4	139.7

Aluminium – round tube

Factor N	o/d and wall thickness In mm	Length of pillar m				
		2	2.5	3	3.5	4
3		88.9 x 6.4	114.3 x 6.4	114.3 x 6.4	114.3 x 6.4	127 x 6.4
4		114.3 x 6.4	114.3 x 6.4	114.3 x 6.4	127 x 6.4	152.4 x 6.4
6		114.3 x 6.4	114.3 x 6.4	127 x 6.4	152.4 x 6.4	165.1 x 6.4
8		114.3 x 6.4	127 x 6.4	152.4 x 6.4	165.1 x 6.4	-
10		127 x 6.4	152.4 x 6.4	-	-	-
13		127 x 6.4	152.4 x 6.4	-	-	-
16		152.4 x 6.4	165.1 x 6.4	-	-	-
20		152.4 x 6.4	-	-	-	-
24		165.1 x 6.4	-	-	-	-
29		-	-	-	-	-

Notes:-

1) Factor N = (1.4L x b) + Na for pillars supporting main deck and (1.07L x b + Na) for pillars supporting superstructure deck where:-

   L and b are the length and span respectively of deck supported by pillar.

   Na = N value for pillar directly or approximately above pillar concerned.

2) Where N and/or pillar lengths fall between table values, the next higher value for each is to apply.

3) Where pillars of a different size or section are intended, they are to be of equivalent strength to those shown in the Tables.

4.23 Figures & Illustrations

4.23.1 Scantling numeral dimensions – steel and aluminium vessels

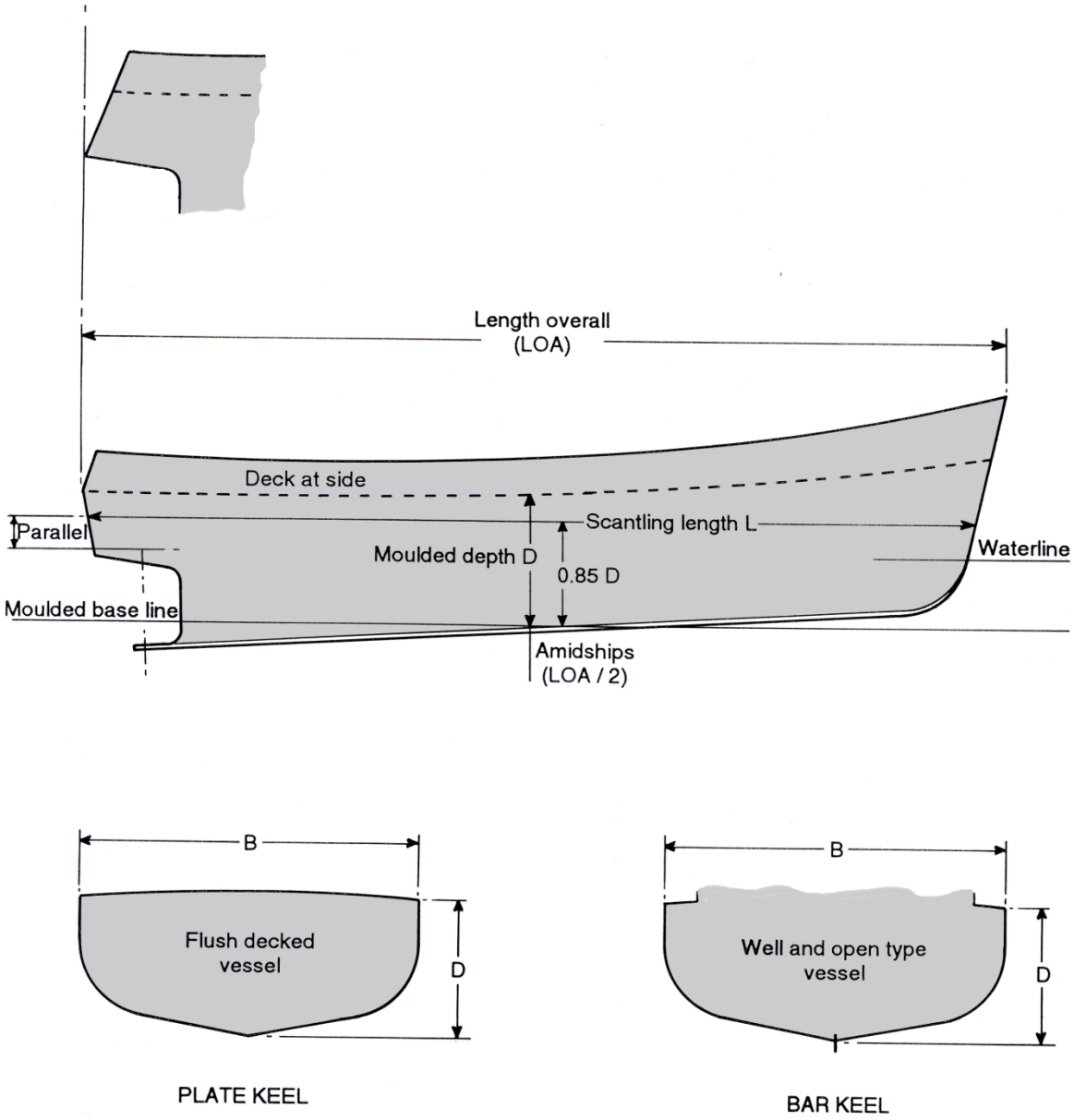

Length overall measured in a straight line from the fore side of stem at top to after side of stern / transom, or fore side of the bulbous bow to after side of stern / transom if that be greater.

Scantling length L measured in a straight line parallel to an assumed waterline at 0.85 x moulded depth, above top of keel amidships.

Breadth B measured to outside of plating at the greatest breadth of the vessel, but excluding fenders or rub rails.

Depth D measured amidships from top of plate keel or the line of intersection of the inside of the shell plating at keel to top of deck beam at side. (see fig. 1a).

4.23 Figures and illustrations

4.23.2 Scantling numeral dimensions – steel and aluminium vessels

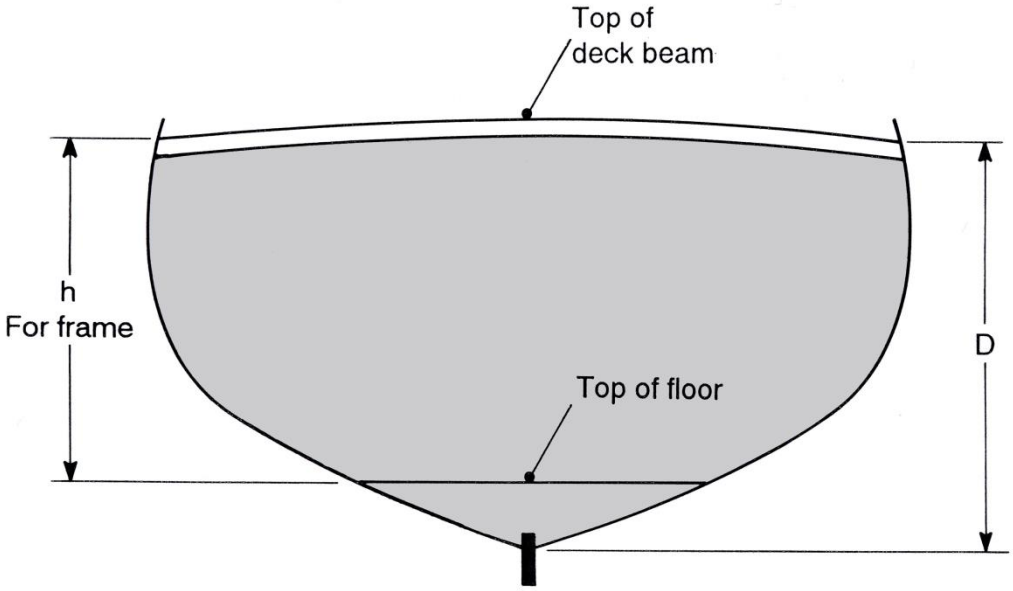

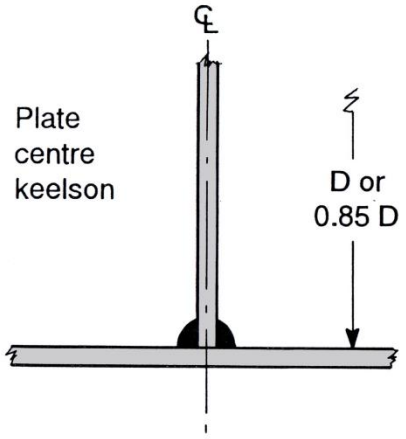

PLATE KEEL

Fig.1a

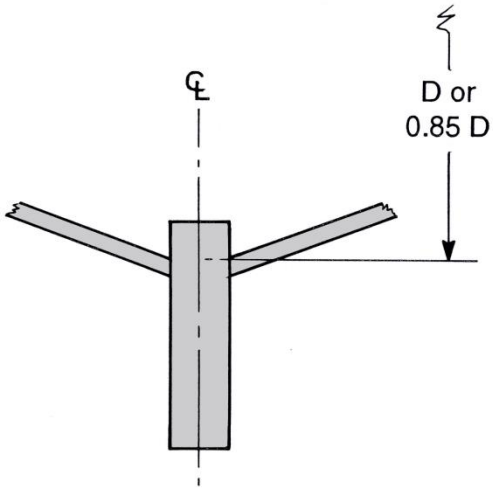

BAR KEEL

4.23 Figures and illustrations

4.23.3 Beam knees and longitudinal brackets

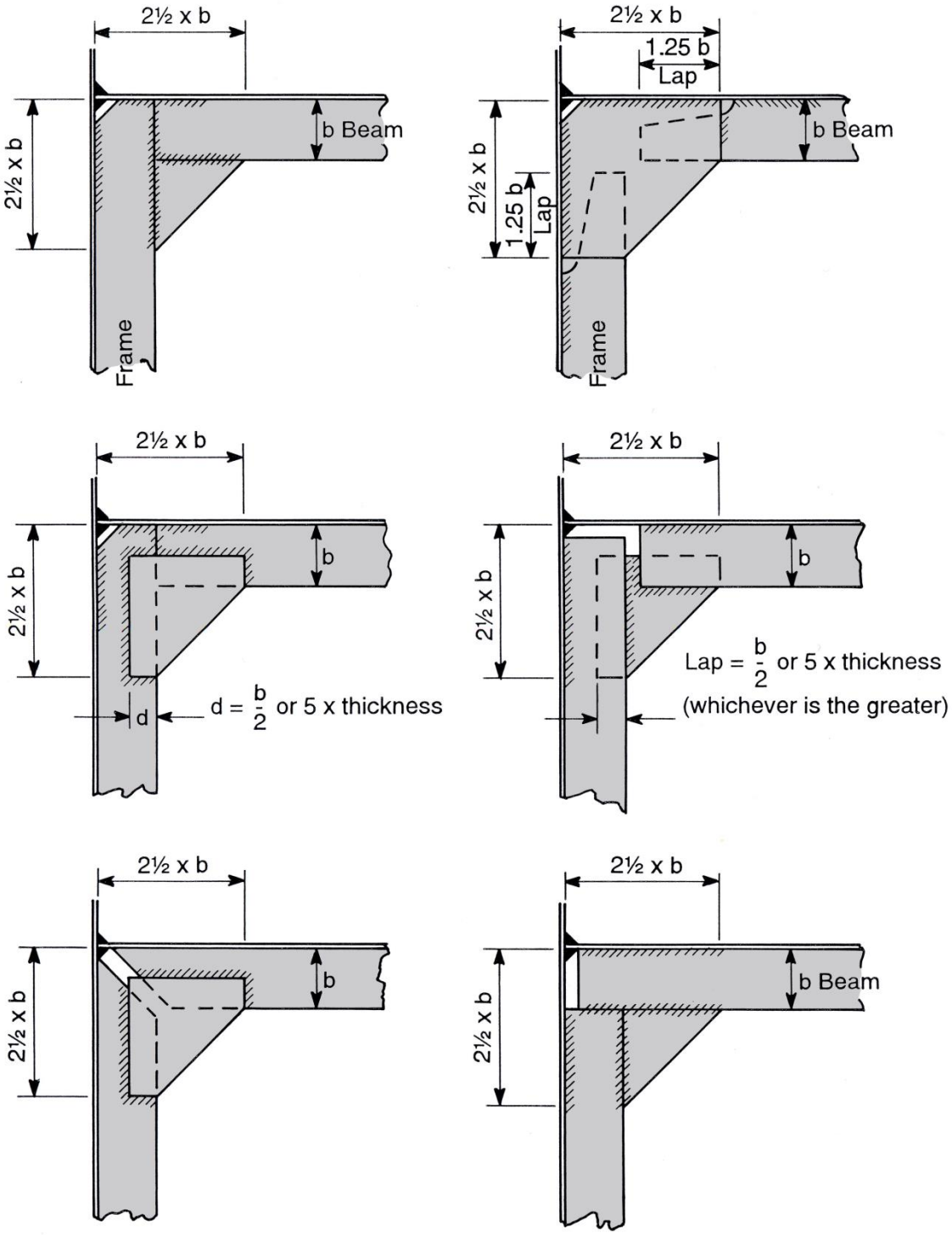

i) Where beam and frame scantlings are greater than required by the associated tables, the beam knee may be omitted where the beam is directly connected to the frame to the approval of the surveyor.

ii) The thickness of unflanged brackets should not be less than the table thickness of the stiffener.

iii) Where the bracket length / thickness ratio exceeds 32 the bracket is to be flanged.

4.23 Figures and illustrations

4.23.4 Longitudinal girder brackets

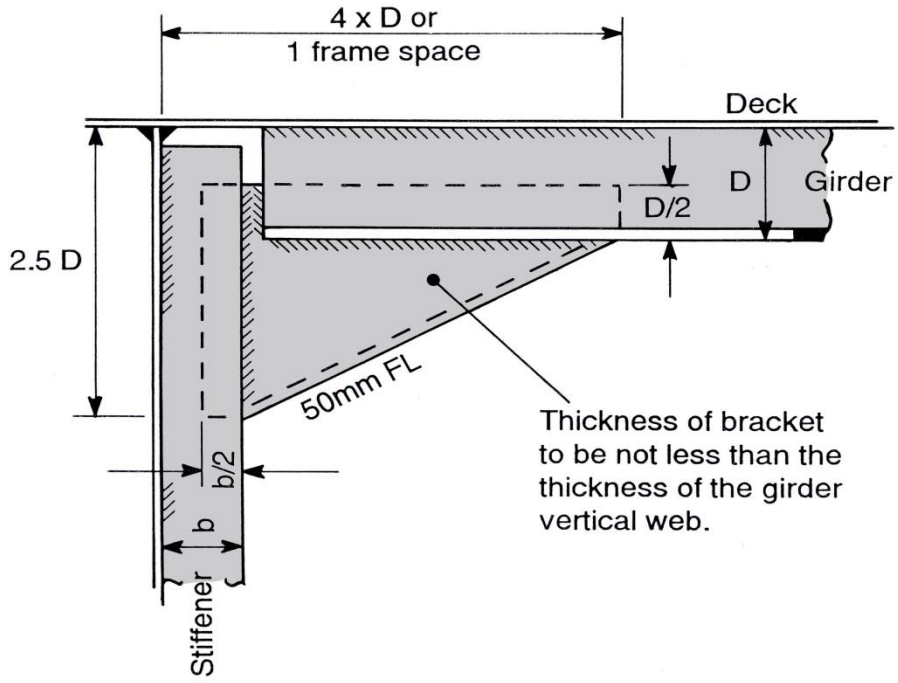

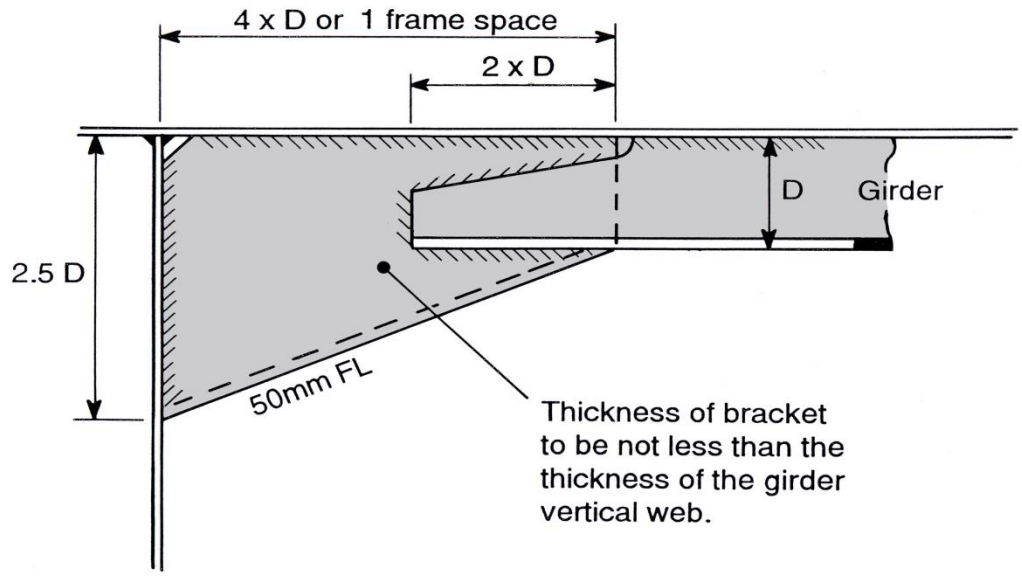

Transverse deck beams in way of bracket ends are to be collared where passing through the deck girder.

4.23 Figures and illustrations

4.23.5 Side frame bottom brackets

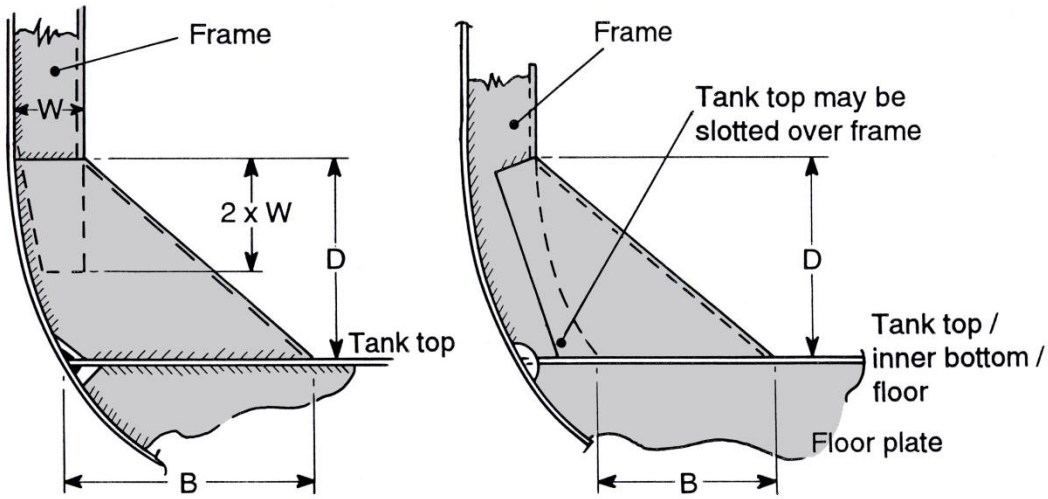

Notes:

1. D is to be not less than 0.1 x the unsupported span of the side frame.
2. B is to be not less than 1.5 x the depth of the side frame.
3. The thickness of the bracket is to be not less than that of the floors locally.
4. All brackets are to be flanged or fitted with a welded face bar. Minimum width of flange is to be 50 millimetres.

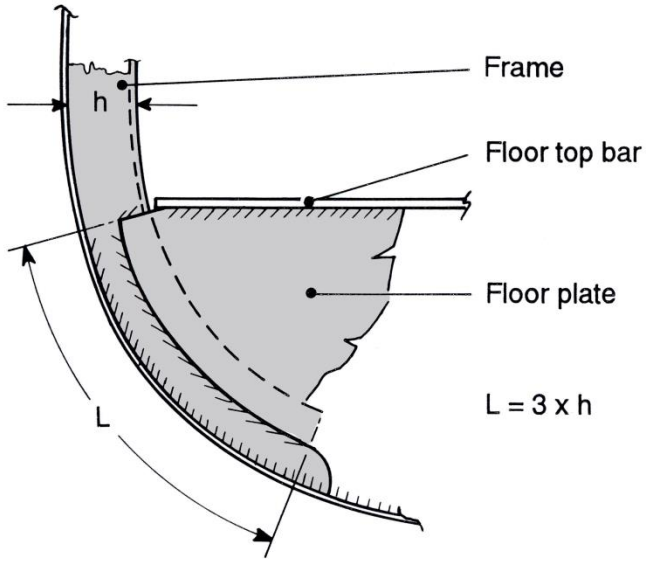

FRAME TO FLOOR LAP CONNECTION

4.23 Figures and illustrations

4.23.6 Bottom construction

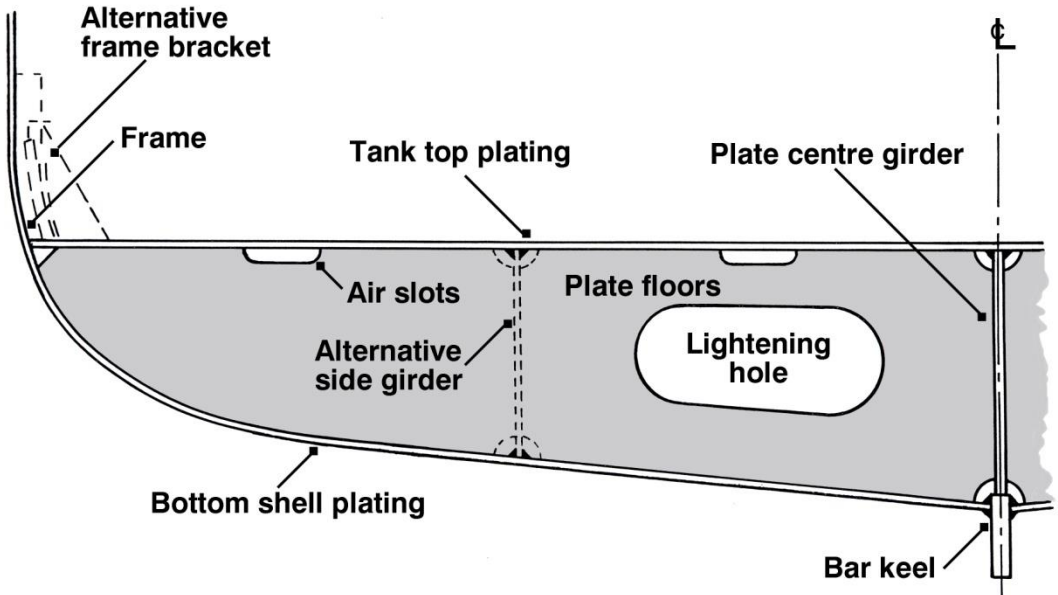

TYPICAL BOTTOM INTEGRAL TANK CONSTRUCTION

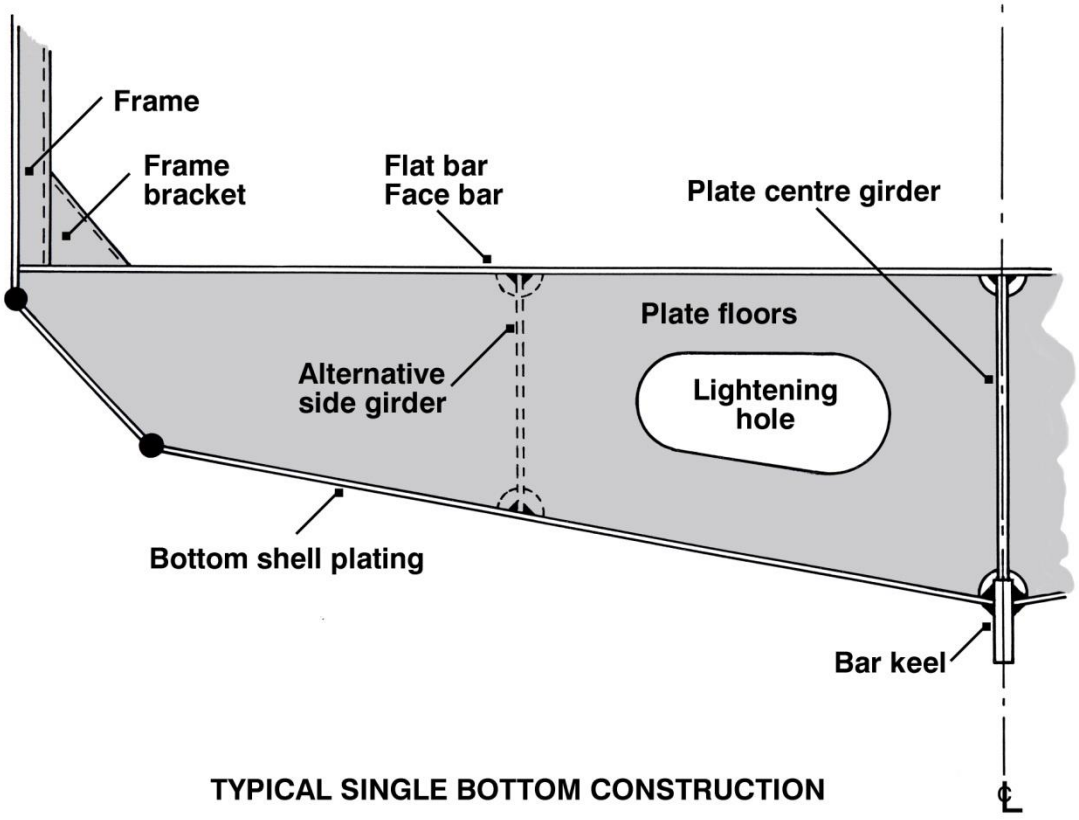

TYPICAL SINGLE BOTTOM CONSTRUCTION

For integral tanks see section 4.5

4.23 Figures and illustrations

4.23.7 Bilge keel details

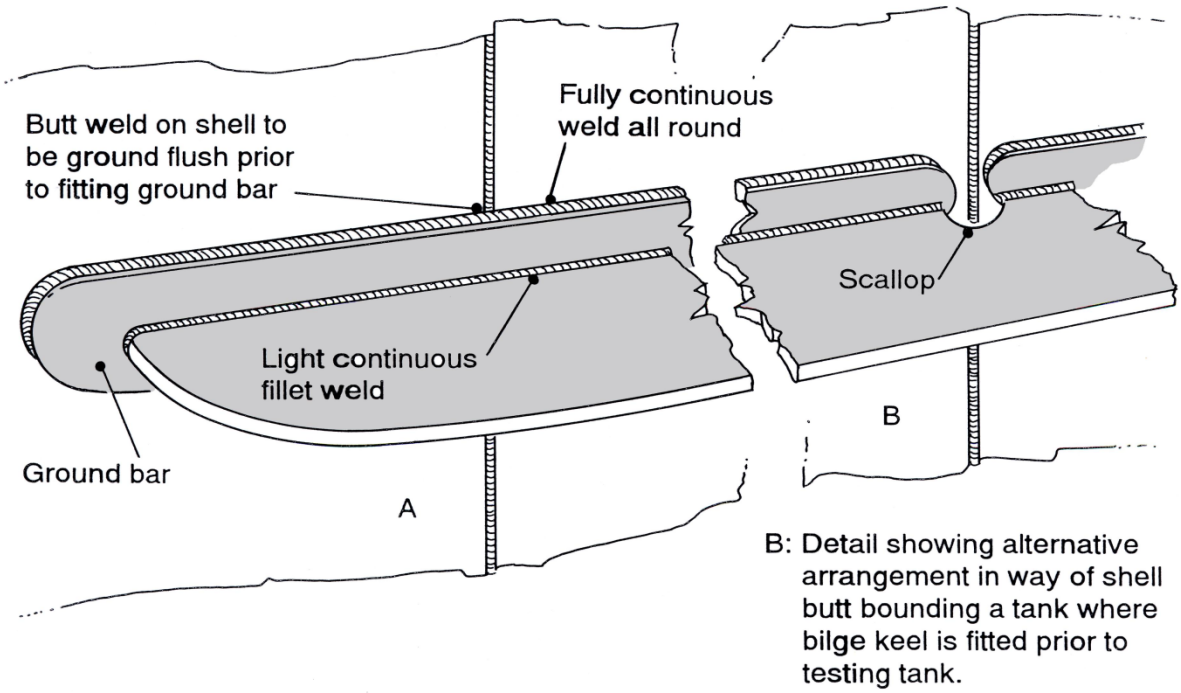

Notes:

1. Butts in ground bar and bilge keel should be well staggered from shell butts and from each other.

2. The arrangement shown above involving the grinding flat of shell plating butt welds before fitting the ground bar for the bilge keel, should not be used in way of fuel and other tanks unless the tanks have been pressure-tested after grinding the shell butt weld and before fitting the bilge keel.

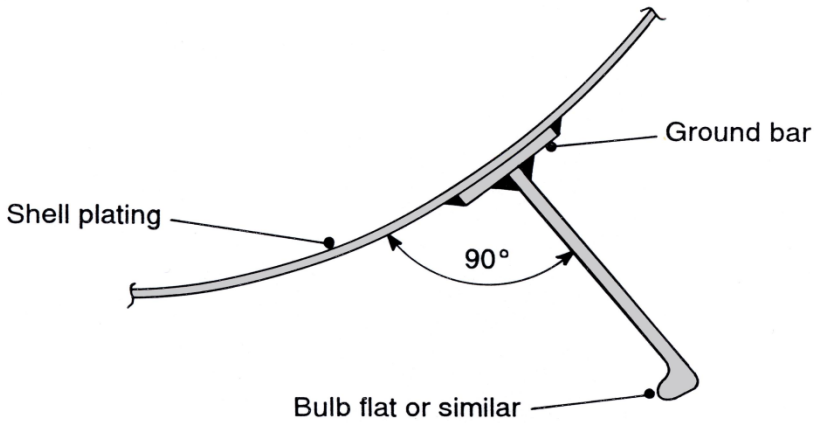

See section 4.18

4.23 Figures and illustrations

4.23.8 Longitudinal shell plate stringer position

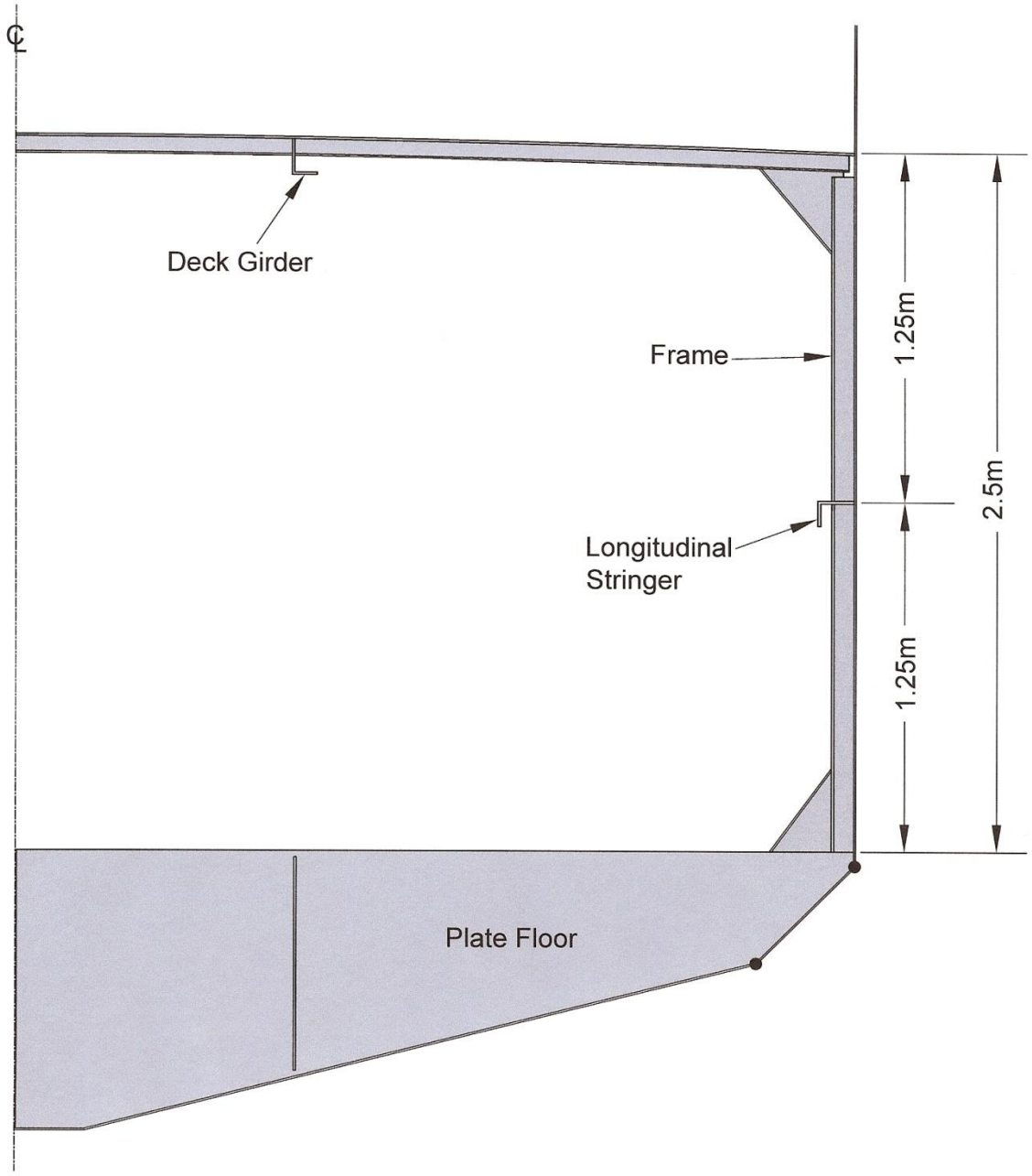

See section 4.9.9.

4.23 Figures and illustrations

4.23.9 Typical keel arrangement

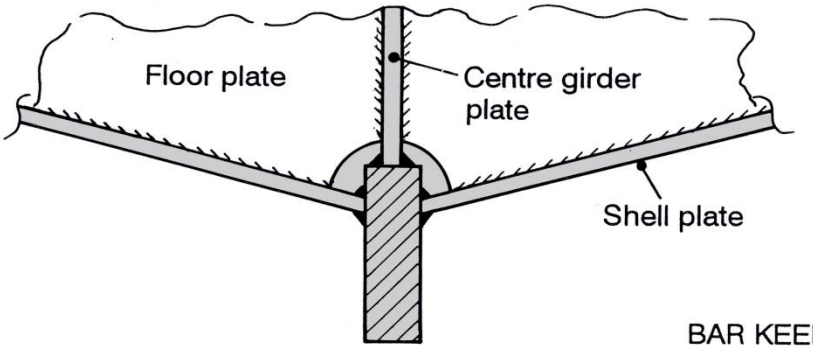

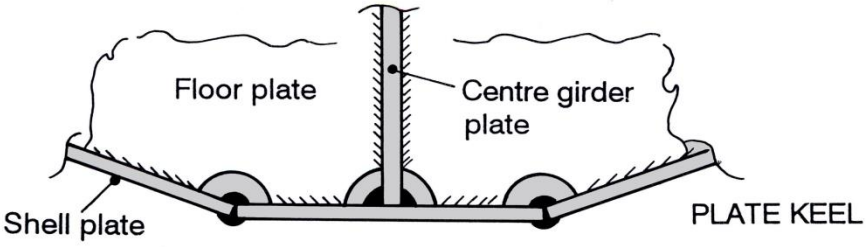

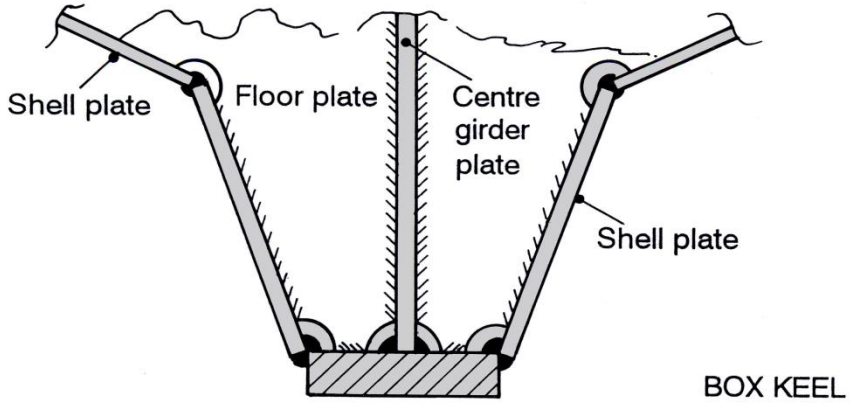

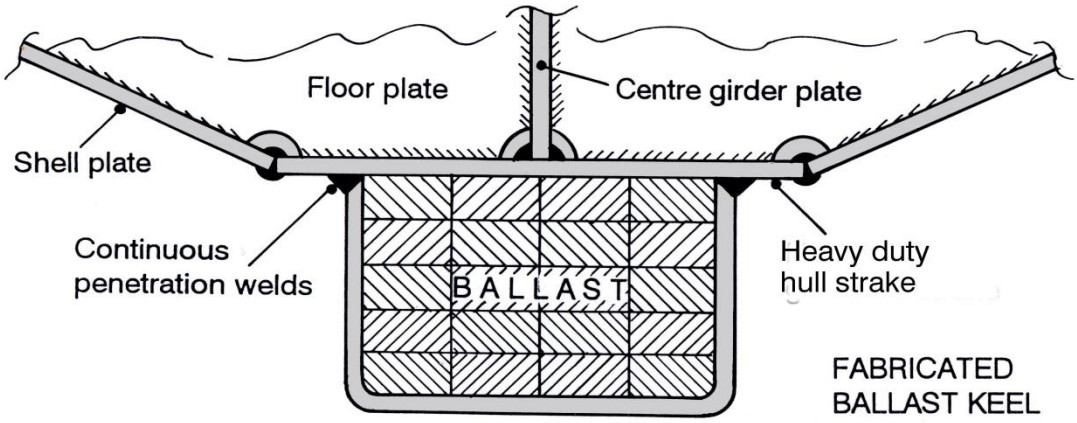

See section 4.3 & Table 4.22.1

4.23 Figures and illustrations

4.23.10 Deck girder arrangements

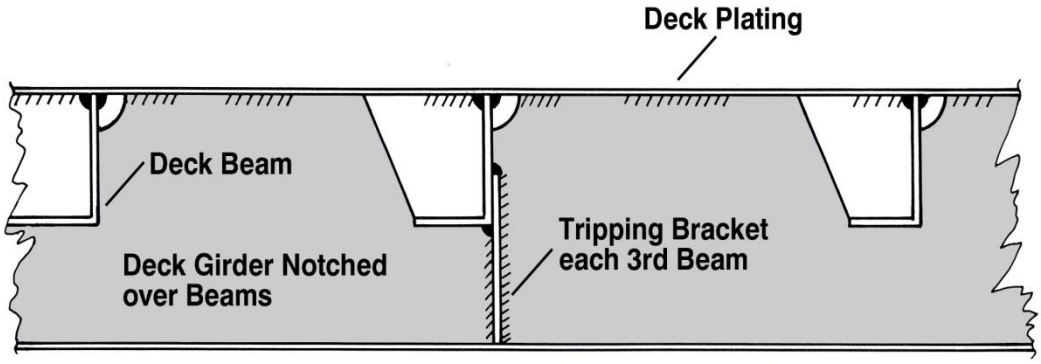

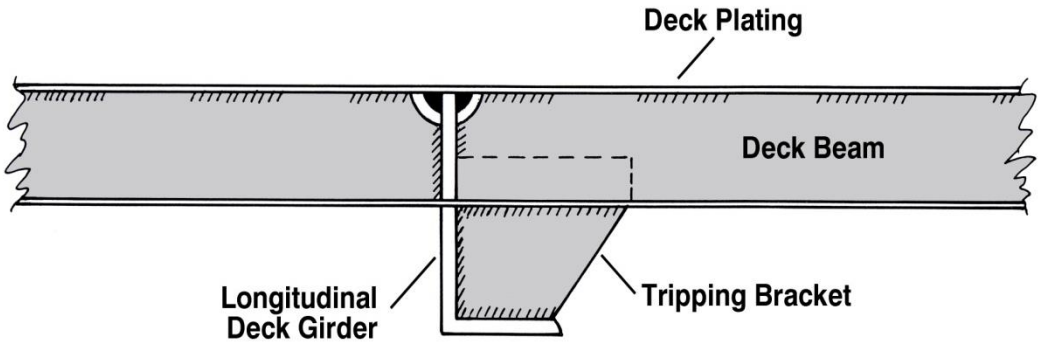

See sections 4.11, 4.12 & Tables 4.22.7, 4.22.9

4.23 Figures and illustrations

4.23.11 Chine bar

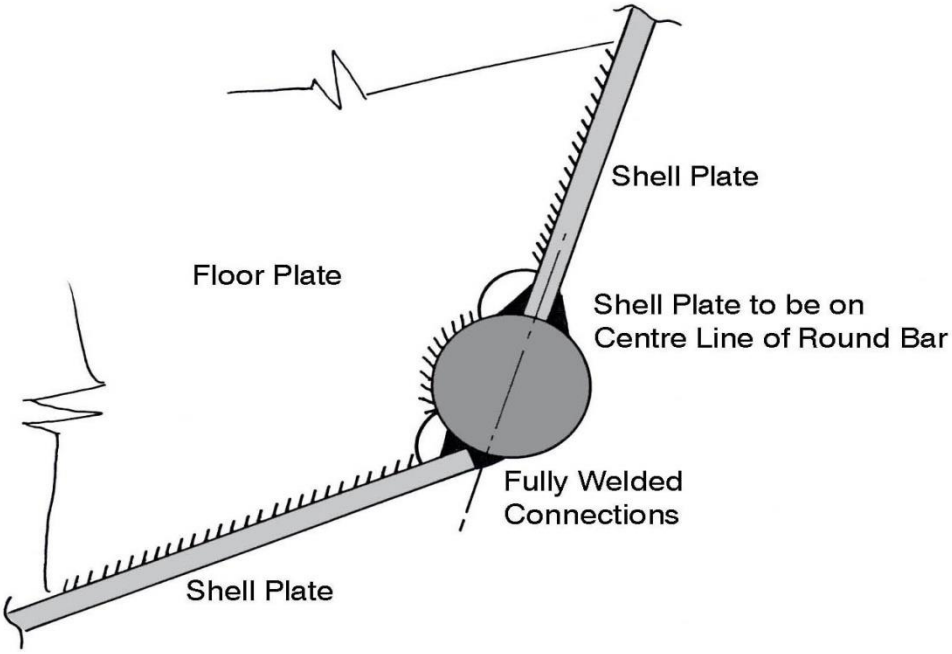

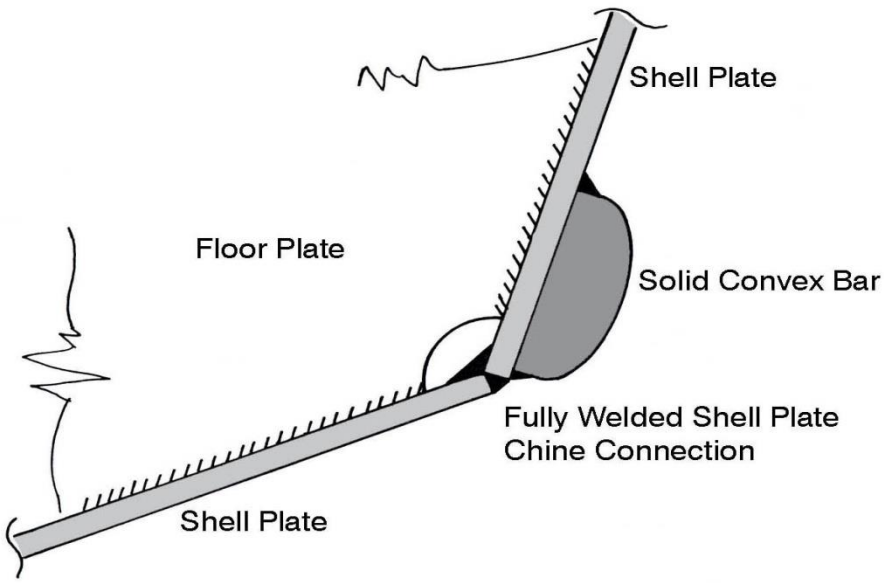

See Table 4.22.12

4.23 Figures and illustrations

4.23.12 Recessed ladders