Drawing No.
NP 958.12

Related Drawings
S 23, S 24, & S 25

© CROWN COPYRIGHT

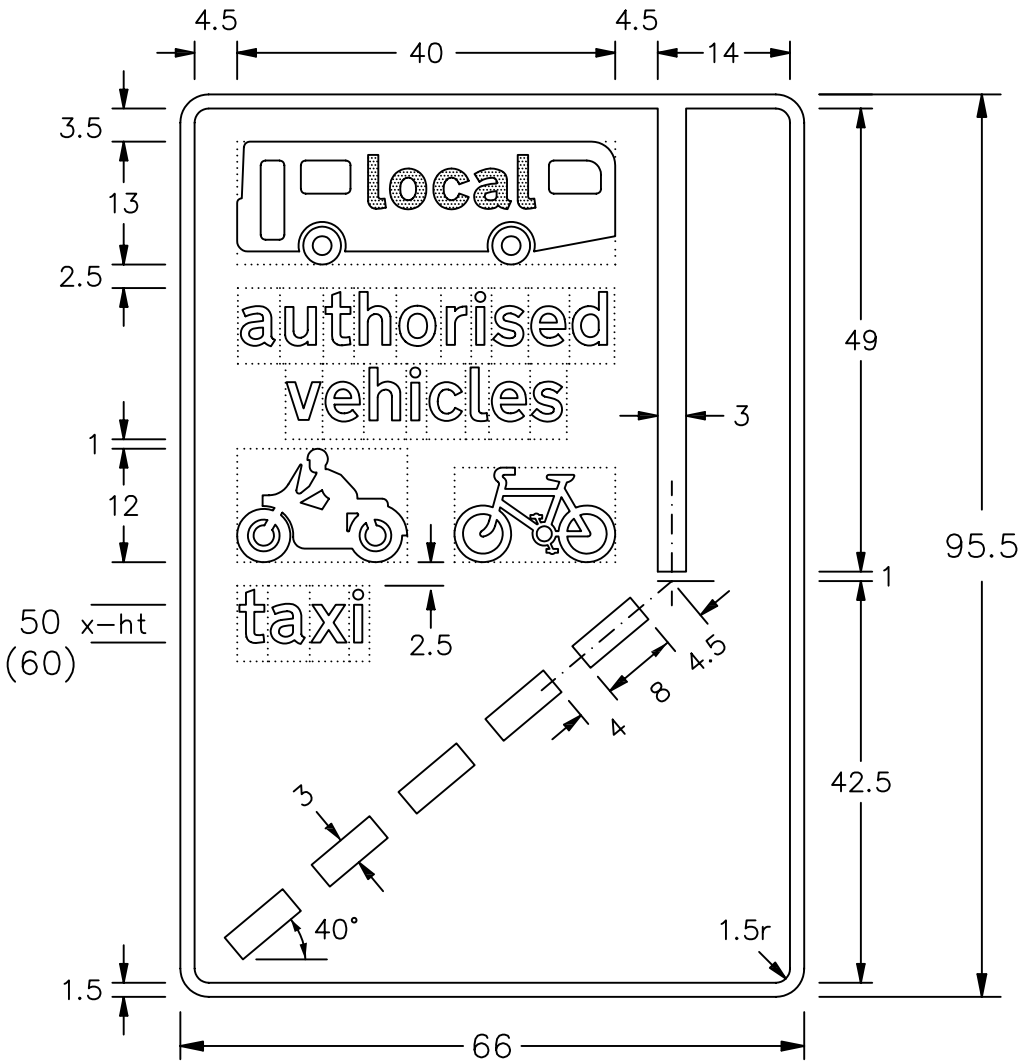

NOTES:
1. The legend is from the Transport Medium alphabet at the x-heights shown. The word 'local' on the bus is from the Transport Heavy alphabet.
2. Symbol details are given on drawings S 23, S 24 and S 25 sheets 1 & 2. The symbols must always face left.
3. The tile outlines do not form part of the sign.
4. COLOURS:–
   Background ---------- BLUE
   Legend, Symbols & Border --- WHITE
   Legend on bus symbol ------ BLACK
5. DIMENSIONS : x-heights are in millimetres, other dimensions are in stroke widths. (4sw = x-height)
6. The legend 'local' may be omitted and the bus symbol varied to the one shown on drawing S 25 sheet 1. A time plate may be added in the same colours (see drawing P 961).

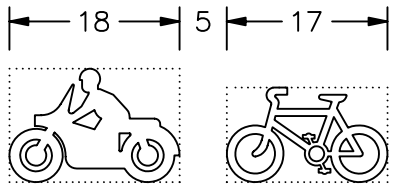

NP958x12

Before using this drawing, confirm that it has not been superseded.

Department for Transport	Title: Informatory Sign BUS, AUTHORISED VEHICLES AND MOTOR CYCLE LANE AHEAD	Issue: A: B: C:	Date: 12.8.05	Drawn by: L.W./R.M. Approved by: R.M.	Dimensions: SEE NOTE 5	Drawing No. NP 958.12