Tree Surgery • Consultancy • Training

Arboricultural Survey, Categorisation and Implications Assessment

Micheldever Station

Prepared for: SLR Consulting Ltd

Prepared by:

David Hansford
BSc (Hons), Tech Cert (Arbor A), M. Arbor A.

19/04/2012

t 01392 811338 (24hrs)
f 01392 811843
e info@hi-line.co.uk
w www.hi-line.co.uk

Brookfield Yard
Tedburn Road
Whitestone
EXETER EX4 2HF

Hi-Line Contractors SW LTD
Company Number: 4441599 • Vat Registration Number: 812 2664 51 • Managing Director: Hugh Griffiths

Contents

		Page
1	Introduction	2
2	Site visit and observations	3-4
3	Arboricultural appraisal	5-7
4	Arboricultural constraints and design	8-10
5	Tree work considerations	11
6	Map Plan	12
	Appendices	
I	BS5837 tree schedule key	13
II	Botanical tree names	14
III	Cascade chart for tree categorisation	15
IV	Tree protection fencing detail	16

1 Introduction

1.1 Brief

1.1.1 SLR Consulting have instructed Hi-Line to survey all trees that are found at the eastern boundary of the proposed application site at Micheldelver Station (as detailed on the plans provided, as per 1.2, below). This is to be done in the context of BS5837:2005 Trees in relation to construction - Recommendations, prior to any potential development of the site. At time of writing, the extent and nature of any potential development is not known.

1.2 Documents and information provided

1.2.1 Hi-Line has been provided with 2 Microsoft Word format documents, detailing the location and extents of the site:

1. 'Micheldever location' – document including 'jpeg' format maps, aerial photograph and location information
2. 'red line boundary' – document including one 'jpeg' format map with the site outlined in red

These documents were both provided by Rebecca Hendry of SLR Consulting Ltd via email on the 27th of March, 2012.

1.3 Purpose of this report

1.3.1 The assessment and report are commissioned with the primary purpose of assessing the contributions of the trees present within proximity to the proposed development site. This is done in the context of the British Standard document BS5837:2005 Trees in relation to construction – Recommendations. The findings are intended for use as guidance for those involved in planning and implementing the final layout and end use of the site.

1.4 Scope of this report

1.4.1 This report is concerned with the trees within the bounds of the site as described only (see also Map Plan, below and the accompanying document *CT_3275_constraints_plan*). Trees within the confines of the site were not accessed and are only briefly commented on. It is not intended to be used for any purpose other than that outlined above. The report does not take into account any other trees or vegetation, except where these are specifically referred to. The survey methodology was restricted to a visual assessment (the process of VTA, as developed by Mattheck and Breloer, 1994) with regard to assessing the physiological and structural condition of the trees.

1.4.2 The report, schedule and tree survey drawing(s) remain the copyright of Hi-Line Contractors SW Ltd and any transfer of rights to any third party must be with our express written consent.

2 Site visit and observations

2.1 Site visit

2.1.1 I carried out an unaccompanied site visit on Wednesday the 11th of April, 2012. At the time of my site visit the weather was fine and sunny. Due to site restrictions and according to my instruction (the site is adjacent to a railway yard and access is strictly controlled) access to the interior of the site was not possible at time of survey.

2.2 Site description and usage

2.2.1 The site is situated to the north of the village of Micheldever Station, immediately adjacent to (and to the south of) the main A303 dual-carriageway road. The main railway line connecting Southampton to Reading borders the site to the west. The use to which the site is currently being put is not known, although no activity was seen at time of survey (from the eastern boundary) and it appears to have been colonised by native vegetation, comprising mainly Silver birch (*Betula pendula*) and Hawthorn (*Crataegus monogyna*). To the east of the site lies Overton Road. Between Overton Road and the site lies a broad (~ 10-15m) belt of trees. These trees are the primary focus of this report and are comprised primarily of mature Common beech trees (*Fagus sylvatica*). Additional notes regarding site features are included on the accompanying tree constraints plan (ref: *CT_3259_constraints_plan*), please see also the Map Plan, below.

2.3 Identification and location of trees

2.3.1 The trees are identified on the accompanying drawing (ref: *CT_3275_constraints_plan*), which has been annotated to show the location of the trees plus any other relevant information. The majority of the significant, mature beech trees had already been tagged on site with aluminium discs, possibly as part of a Tree Preservation Order by the Local Planning Authority or as part of a previous survey. Any additional trees were numbered using the same convention, using an alphabetical suffix (e.g. 1a, 1b etc).

2.3.2 The tree constraints plan is to scale, and depicts root protection areas (where applicable), crown-spreads and stem diameters of the trees as included in the survey schedule. Two .pdf versions of the constraints plans have also been included, referenced *CT_3275_TCP_S_1_500* (Southern extents of site at 1:500 scale), and *CT_3275_TCP_N_1_500* (Northern extents of site at 1:500 scale).

2.4 Measurements and observations

2.4.1 All measurements have been made from ground-level and are estimated unless indicated otherwise. No invasive, aerial or 'below-ground' investigations have been undertaken. Trees are dynamic, living structures and as such are subject to continual change due to a large number of factors, both inherent and external. This report is based on a visual inspection at a point in time, and must not be taken as a guarantee of future reliability or stability of the trees inspected. It is recommended that all trees in areas of public access are subject to periodic inspection, which should be repeated following major

events such as significant storms, prolonged drought or waterlogging, chemical application and ground disturbance (e.g. trenching) in proximity to trees.

2.5 Methodology

2.5.1 The trees on site were assessed according to BS5837:2005 criteria, as illustrated in the cascade chart (pg 6 BS5837:2005) included as Appendix III, which classifies trees according to their arboricultural, landscape and cultural values.

2.5.2 The trees have been detailed in the accompanying tree survey schedule (ref. *CT_3275_schedule*). The information recorded includes the tree number for identification, species, estimated height (in m), stem diameter (measured at 1.5m above ground level, in mm), an average of the crown spread and crown clearance above ground level (in m), an indication of age category, physiological and structural condition, preliminary management recommendations, estimated remaining contribution in years and a category grading in accordance with BS5837:2005. Abbreviations used in the accompanying schedule are referred to in Appendix I of this report (Tree Schedule Key), along with botanical tree reference names in Appendix II.

3 Arboricultural Survey

3.1 Tree Categorisation in BS5837:2005

3.1.1 According to BS5837, trees are categorised according to their relative attributes and values:

3.1.2 'R' category trees are trees that generally should be removed and not constrain planning or design in any way. It may be, however that 'R' category trees present a valuable ecological resource and alternative work prescriptions formulated for their retention. Broadly speaking these are trees in such a condition as to be likely to lose any existing value within 10 years. Their removal may also be more urgently required for reasons of public safety or due to the presence of disease.

3.1.3 'A' category trees are trees of outstanding quality and value, so as to be likely to contribute a minimum of 40 years useful life expectancy to a site. They are of such importance that site design should be adapted to allow for their retention.

3.1.4 'B' category trees should generally also be retained, likely to contribute a minimum of 20 years to the site, and have minor identifiable defects or constraints, which eliminate them from the higher category. Groups of lower category trees may be included within the higher category as their collective value is much greater than for the individuals considered in isolation.

3.1.5 'C' category trees are the lowest quality trees recommended for retention. They are not considered to be of sufficiently high quality so as to pose a significant constraint to development. However, young trees with stem diameter 150mm or less can be considered for relocation to areas where their long-term benefit can be realised.
(The cascade chart from BS5837:2005 is included as Appendix III).

3.2 Site Appraisal - General points

3.2.1 The layout of any development should generally cater for the retention of 'A' and 'B' category trees. 'C' category trees will not normally be retained where they will significantly constrain the development or present significant amenity issues, depending on the future use of the site.

3.2.2 The felling of 'A' and 'B' category trees cannot be justified under arboricultural criteria. BS5837 does however recognise that there are many constraints other than arboricultural, which affect the layout of the site, and it may be necessary and justifiable to fell 'B' category trees. Where this is the case, the Local Planning Authority is likely to require compensation in the form of new planting and landscaping.

3.3 Mature beech trees – G1 (T1-T65)

3.3.1 As stated above, the main arboricultural feature in proximity to the site is the mature row of beech trees lying between Overton Road and the eastern boundary. These trees have been planted as a formal feature running roughly north-south and I would estimate that the trees are approximately 80-120 years old. The trees appear to have been planted

initially as a double row, although a small number of trees have been lost through failure or removal. The portion of the row included in this survey runs from an entrance to the site at the southern extent, almost all the way to the A303 at the northern extent and the row kinks slightly to the west and away from Overton Road approximately half-way along the surveyed route. The feature continues to the south to the village of Micheldever Station and is in total approximately half a mile long. Please see also map plan, below.

3.3.2 The contribution of these trees to the landscape and history of the locality is considerable and has collectively been assigned an 'A' categorisation according to BS5837 criteria. The row of trees have been categorised as a single group within the survey due to the coherent feature that they form. Trees within the group have also been itemised (T1-T65) and their location recorded. The last 4 trees in the row are not itemised as they are situated far enough from the corner of the boundary fence not to be affected by any development activity. They would also be adequately protected by any protection measures installed for the remaining trees. It should be noted that no individual trees within the group have been assigned higher than a 'B' category; it is the collective value that is significant.

3.3.3 Within G1 there are a considerable number of young, self-seeded native species, including beech, hawthorn, yew (*Taxus baccata*) and spindle (*Euonymous europaeus*), which effectively forms an under-storey. The dominant component is the beech.

3.4 G2 – Native cherry trees (T66-T69)

3.4.1 4 Cherry (*Prunus avium*) trees have been planted at the northern extent of the site, as the boundary fence cuts westward. These trees comprise T66-T69 and are all large, mature trees. Collectively assigned a 'B' categorisation, T66 however presents extensive basal decay due to the wood decay fungus *Ganoderma applanatum*. The removal of T66 may be required should development result in high-value targets being installed in proximity to this tree.

3.5 G3 – T70-T74

3.5.1 G3 comprises the trees which run to the east of the boundary fence as it cuts northward once again. The trees are all native and comprise hawthorn, ash (*Fraxinus excelsior*) and beech. The three hawthorn comprising T70 are all large, mature trees that present good ecological value, although their contribution to amenity is limited by their stature. T71 and T72 are ash trees, assigned 'C' and 'B' categorisations respectively.

3.5.2 T73 and T74 are both mature beech trees, forming part of a larger group that runs approximately east-west and includes approximately 11 beech trees in total. T73 is suppressed by T74 and is awarded a lower 'C' categorisation. T74 is a 'B' category tree.

3.5.3 Throughout G3 (as with much of the site), an under-storey of smaller, 'scrubby' species is present, including hawthorn, young ash and elder (*Sambucus nigra*). Collectively, these also contribute to the beneficial screening presented by the vegetation surveyed for this report.

3.6 Trees within the confines of the site

3.6.1 As stated previously, access to the interior of the site was not obtained for the purposes of this survey. Therefore, a detailed appraisal is not possible. Aerial photography indicates that a portion of the site, particularly toward the east, has been colonised by vegetation. From what is visible from the east boundary, a large proportion of this appears to be self-seeded birch and hawthorn. It is not considered that these trees should present significant constraints to the potential development of the site, as they are visible largely only internally to the site and are of generally young to semi-mature age categorisation.

3.6.2 A small group of trees (G5) is present in the far north-eastern corner of the site (i.e. within the boundary fence). These trees comprise 7 mature beech and 2 semi-mature beech trees. There is also one dead beech tree present. These trees form a coherent group and appear to be situated adjacent to a steep 'drop-off'/bank immediately to the west. A preliminary categorisation for this group would be 'B' under BS5837 criteria.

3.7 G4 – Trees planted to the north-east of the site

3.7.1 The area to the north-east of the site, bordering G1, has been planted up with a mixture of species including beech, hawthorn, elder, sycamore (*Acer pseudoplatanus*) and Norway maple (*Acer platanoides*). These trees are generally semi-mature trees of maximum top-height 15m. It is not anticipated that these trees would be affected by development activity within the site, however if new access routes to the site are to be constructed then they may well be. As a group, a 'B' categorisation is assigned to these trees. No individuals within the group are worthy of higher than a 'C' categorisation.

4 Arboricultural constraints and design

4.1 General

4.1.1 Trees pose both above and below ground constraints in the form of the stem and branches above ground and the roots below it. BS5837 requires that development proposals reflect the constraints posed by existing trees that are to be retained.

4.2 Crown-lifting

4.2.1 Crown-lifting of low branches is often necessary if access is to be optimised within any new development. In relation to this site, it is possible that crown-raising and branch-reduction will be necessary where trees are encroaching onto and beyond the perimeter fence in-particular arising from Group 1. Any branch-reduction or crown-lifting should be completed prior to any development taking place, to prevent unnecessary wounding and damage to the trees. In undertaking these operations, advice within the British Standard document BS3998:2010 Recommendations for tree-work should be adhered to.

4.3 Root Protection Areas

4.3.1 A facility within BS 5837 for structures to be built within the Root Protection Area (RPA) exists. The RPA is an area around a tree or group of trees (where the tree(s) is/are to be retained), which is protected from construction and vehicular or pedestrian access, required for the survival of the tree's root system, and therefore the tree. The larger the tree's stem diameter, the larger the RPA, and BS5837 contains guidance for RPA calculation. Construction within the RPA (if a tree is to be retained) is subject to arboricultural assessment and the possible implementation of special 'no-dig' construction and access methods. The RPA can also be offset by up to 20%, where considered appropriate for individual, open-grown trees, as long as the total area is not reduced. This factor may be increased further if existing structures have had an effect on root development.

4.3.2 It should be noted that it is not possible to utilise 'no-dig' construction methods in all situations for retained trees. For instance, changing ground-levels (i.e. building ground up or re-grading where not level) excessively is not possible. Also, 'no-dig' construction methods such as 3D load-spreaders or cellular confinement systems are not generally suitable for large areas of the RPA for 'open-grown' trees. In addition, alternative foundation designs which have a low impact on tree roots (e.g. pile and suspended beam foundations, suspended floors) are not suitable for all building types. Advice from a structural engineer will have to be sought in these instances.

4.3.3 It is unlikely that if the development space is to be utilised fully that it will be possible to retain the self-seeded trees within the boundary fence. Consideration should be given, however to retaining better quality examples where possible, for example for integration into landscape schemes for car-parks or gardens to provide an immediate impact and to help soften the developed landscape. Further survey will be required to measure and install adequate protection measures if this is to be the case.

4.3.4 Installing tree protection measures to protect the boundary trees is, in theory a straight-forward process. As the trees are situated within a coherent, separate border, where for many of the trees the roots are adequately protected by the boundary fence, installing tree protection fencing approximately 4m inside the fence would provide adequate protection for all trees (see accompanying constraints plan ref: *CT_3275_constraints_plan*). This presents a relatively minor constraint on the development site with the benefit of ensuring the healthy retention of a prominent row of mature trees and the screening it provides.

4.4 Tree protection

4.4.1 Tree protection measures, such as fencing to protect the RPA or ground protection, are also a constraint on development. Tree protection fencing recommendations (pg 13 BS5837:2005) are included as Appendix IV. BS5837 outlines the need for a Tree Constraints Plan to be produced detailing the RPA for retained trees/groups and also the above-ground constraints (i.e. the size of the canopy for retained trees). As stated above, this is included with this report, referenced *CT_3275_constraints_plan*.

4.5 Implications of development

4.5.1 The main arboricultural implication with regard to the site is likely to involve the access and egress arrangements from Overton Road. To facilitate this aim it is highly likely that trees will have to be removed from within Group 1 – the row of mature beech trees. An entrance is present at the southern extent of the trees surveyed (see constraints plan ref: *CT_3275_constraints_plan*), which ideally would be utilised and widened to provide this access, thereby reducing the number of trees requiring removal. Other than this entrance, there are no other obvious points along Overton Road where an existing break in the trees (for example) could be chosen as the point to provide access. As such, the implications of installing a road through Group 1 are that a number of mature beech trees will have to be removed; thereby introducing a gap in to what is currently a contiguous arboricultural feature. The immediate surrounds are not heavily developed; therefore the implications for amenity are relatively small, but potentially still locally significant.

4.5.2 The retention of the majority of Group 1 (which is recommended), will mean that the morning sun will be largely shaded from development at the eastern extent of the site during the spring and summer months. To reduce future demands for tree works it would be wise (if possible) to install buildings as far from the boundary as possible, or to allow for this shading by designing the main living/working areas (as applicable) to the western and southern aspect of the buildings. Alternatively, installing parking areas at the eastern boundary may be a possibility, thereby utilising the space and helping to prevent future conflict.

4.5.2 A possible alternative to that discussed above would be to direct an access road to the site from the northern extent past the end of Group 1. This would involve removing trees from within Group 4 and Group 2, but would mean that the integrity of Group 1 is not affected.

4.5.3 As stated above, retaining trees within the confines of the site if the development space is to be utilised fully will be limited to a handful of the best specimens or incorporating an existing hedgerow as an internal boundary between plots, for example.

4.5.4 Depending on the extent of development, trees within G5 may have to be removed. There are a few decent beech specimens within this group, however these are largely visible only internally to the site and any loss would have a relatively minor impact on amenity. Selection of the best specimens to incorporate into a large garden or open space will require adequate tree and ground protection to ensure future demands for tree-work are reduced.

5 Tree-work considerations

5.1 General

5.1.1 It is recommended that any remedial tree work be carried out according to the survey results. Crown raising and branch removal may also have to be carried out at some point to allow for permitted development and future access considerations if trees are to be retained through the development process.

5.2 Arboricultural Method Statement

5.2.1 BS5837 recommends that a Tree Protection Plan (TPP) be produced once the final site layout design has been approved. As part of the TPP, the final RPA are plotted and a detailed schedule of works is formulated as an Arboricultural Method Statement (AMS), with reference to each tree/group of trees individually. The TPP includes the final siting of protection fencing and areas for special construction requirements.

5.3 Implementation of works

5.3.1 All tree works should be carried out to BS 3998:2010 'Recommendations for Tree Work'. It is advisable to select a contractor from the local authority list and preferably one approved by the Arboricultural Association. Their Register of Contractors is available free from Ullenwood Court, Ullenwood, Cheltenham, Glos GL53 9QS. Telephone 01794 368717; website www.trees.org.uk/contractors.htm.

5.4 Supervision of work

5.4.1 It is recommended that during the development, an arboriculturist should be periodically available on site to oversee operations where they may directly affect the retained trees (this is generally accepted best practice in any event, especially prior to the main construction phase).

5.5 Statutory wildlife obligations

5.51 The Wildlife and Countryside Act 1981 as amended by the Countryside and Rights of Way Act 2000 provides statutory protection to birds, bats and other species that inhabit trees. All tree work operations are covered by these provisions and advice from an ecologist must be obtained before undertaking any works that might constitute an offence. Certain UK species are also protected by European Law, including all species of Bats, under the Conservation of Habitats and Species Regulations 2010.

6 Map Plan

A303
G3
G2
G4
G1
Overton Rd
© 2012 Infoterra Ltd & Bluesky
© 2012 Google
Google earth
Imagery Date: 4/26/2008
51°11'18.58" N 1°15'24.42" W elev 139 m
Eye alt 529 m

Appendix I - BS5837 Tree Schedule Key

Tree no:	A letter and number are given for identification: T; Individual specimen G; Group of 2 or more trees H; Linear group of trees or shrubs that form a hedge W; A group/area of trees taken to be a wood
Species:	The common names are given on the schedule. An appendix is attached listing the botanical names.
Height:	An estimation of the existing height, in metres, is given.
Stem diameter:	Stem diameter measured at a height of 1.5m for single stem trees and just above the root flare for multi-stemmed trees, given in millimetres.
Branch spread:	An estimation of radial spread of the crown of the tree, given in metres, and measured at each of the four compass points.
Crown clearance:	The height, measured from ground level, of the lowest branches in the crown of a tree.
Age Class:	An assessment of the tree's age: Y = Young. A tree in the first third of its expected lifespan. SM = Semi-mature. A tree in the second third of its expected lifespan. M = Mature. A tree in the final third of its expected lifespan. OM = Over-mature. A tree that has exceeded its expected lifespan. V = Veteran. A tree that has, by virtue of certain features, high value as an ecological feature, and cannot be assessed in terms of age.
Physiological/ Structural condition:	An assessment of the health and structural integrity of the tree. Good: A tree with no visible significant physiological or structural defects. Fair: A tree with only minor physiological or structural defects, currently of low significance. Poor: A tree with significant, irremediable defects.
Preliminary Management Recommendations:	An initial assessment of any required works, based on sound arboricultural principles.
Estimated remaining Contribution:	An assessment of the number of years useful contribution the tree is expected to offer if managed correctly.
Category grading:	Based on guidance from BS5837, an assessment, based on arboricultural principles, of the tree's category: R – A tree that should be removed. A – An outstanding example for a tree of that species that should be retained. B – A good example for a tree of that species that should be retained. C – An average example for a tree of that species that could be retained.

Appendix II – Botanical tree names

Ash -	*Fraxinus excelsior*
Beech -	*Fagus sylvatica*
Cherry -	*Prunus avium*
Elder -	*Sambucus nigra*
Hawthorn -	*Crataegus monoyna*
Norway maple -	*Acer platanoides*
Oak -	*Quercus robur*
Spindle -	*Euonymous europaeus*
Sycamore -	*Acer pseudoplatanus*

Appendix III – BS5837 Cascade chart for tree categorization

Table 1 — Cascade chart for tree quality assessment

TREES FOR REMOVAL

Category and definition	Criteria	Identification on plan
Category R Those in such a condition that any existing value would be lost within 10 years and which should, in the current context, be removed for reasons of sound arboricultural management	• Trees that have a serious, irremediable, structural defect, such that their early loss is expected due to collapse, including those that will become unviable after removal of other R category trees (i.e. where, for whatever reason, the loss of companion shelter cannot be mitigated by pruning). • Trees that are dead or are showing signs of significant, immediate, and irreversible overall decline. • Trees infected with pathogens of significance to the health and/or safety of other trees nearby (e.g. Dutch elm disease), or very low quality trees suppressing adjacent trees of better quality. NOTE Habitat reinstatement may be appropriate (e.g. R category tree used as a bat roost: installation of bat box in nearby tree).	DARK RED RGB code: 127-000-000 AutoCAD 246

TREES TO BE CONSIDERED FOR RETENTION

Category and definition	Criteria – Subcategories			Identification on plan
	1 Mainly arboricultural values	2 Mainly landscape values	3 Mainly cultural values, including conservation	
Category A **Those of high quality and value**: in such a condition as to be able to make a substantial contribution (a minimum of 40 years is suggested)	Trees that are particularly good examples of their species, especially if rare or unusual, or essential components of groups, or of formal or semi-formal arboricultural features (e.g. the dominant and/or principal trees within an avenue)	Trees, groups or woodlands which provide a definite screening or softening effect to the locality in relation to views into or out of the site, or those of particular visual importance (e.g. avenues or other arboricultural features assessed as groups)	Trees, groups or woodlands of significant conservation, historical, commemorative or other value (e.g. veteran trees or wood-pasture)	LIGHT GREEN RGB code: 000-255-000 AutoCAD 90
Category B **Those trees of moderate quality and value**: those in such a condition as to make a significant contribution (a minimum of 20 years is suggested)	Trees that might be included in the high category, but are downgraded because of impaired condition (e.g. presence of remediable defects including unsympathetic past management and minor storm damage)	Trees present in numbers, usually as groups or woodlands, such that they form distinct landscape features, thereby attracting a higher collective rating than they might as individuals but which are not, individually, essential components of formal or semi-formal arboricultural features (e.g. trees of moderate quality within an avenue that includes better, A category specimens), or trees situated mainly internally to the site, therefore individually having little visual impact on the wider locality	Trees with clearly identifiable conservation or other cultural benefits	MID BLUE RGB code: 000-000-255 AutoCAD 170
Category C **Those trees of low quality and value**: currently in adequate condition to remain until new planting could be established (a minimum of 10 years is suggested), or young trees with a stem diameter below 150 mm	Trees not qualifying in higher categories	Trees present in groups or woodlands, but without this conferring on them significantly greater landscape value, and/or trees offering low or only temporary screening benefit	Trees with very limited conservation or other cultural benefits	GREY RGB code: 91-91-91 AutoCAD 252
	NOTE Whilst C category trees will usually not be retained where they would impose a significant constraint on development, young trees with a stem diameter of less than 150 mm should be considered for relocation.			

Appendix IV – BS5837 Tree protection fencing detail

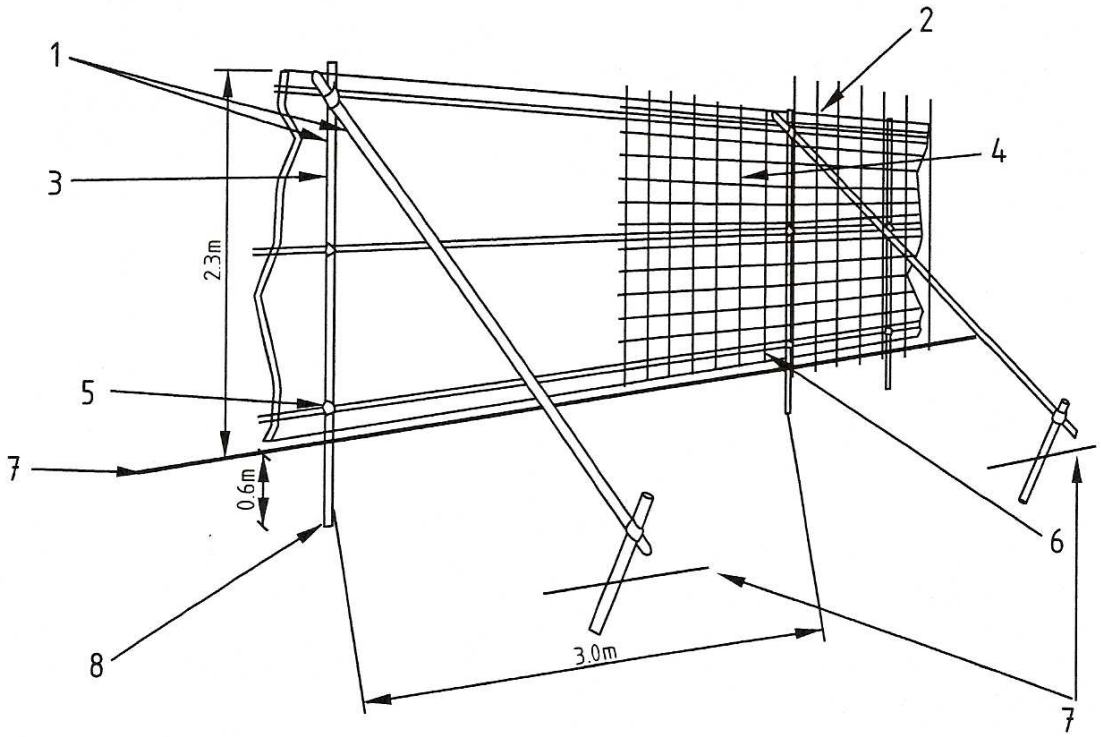

1 Standard scaffold poles

2 Uprights to be driven into the ground

3 Panels secured to uprights with wire ties and where necessary standard scaffold clamps

4 Weldmesh wired to the uprights and horizontals

5 Standard clamps

6 Wire twisted and secured on inside face of fencing to avoid easy dismantling

7 Ground level

8 Approx. 0.6 m driven into the ground

Figure 2 — Protective barrier