Video Turning Counts
A303 SLIPS/OVERTON ROAD, MICHELDEVER

SITE: 1 **LOCATION: A303 WESTBOUND SLIPS/OVERTON ROAD, MICHELDEVER, 'DOG-LEG' CROSSROAD** **ROAD: ARM A, OVERTON ROAD NORTH** **DAY/DATE: THURSDAY 24th MAY 2012**

TIME	MOVEMENT 1, AD									MOVEMENT 2, AC									MOVEMENT 3, AB									MOVEMENT 4, AA								
	From:	ARM A, OVERTON ROAD NORTH								From:	ARM A, OVERTON ROAD NORTH								From:	ARM A, OVERTON ROAD NORTH								From:	ARM A, OVERTON ROAD NORTH							
15 min period	Left to:	ARM D, A303 WESTBOUND OFF-SLIP								Strt to:	ARM C, OVERTON ROAD SOUTH								Right to:	ARM B, A303 WESTBOUND ON-SLIP								U'turn to:	ARM A, OVERTON ROAD NORTH							
	CAR	LGV	OGV1	OGV2	PSV	MYCYL	BYCL	TOT	HR	CAR	LGV	OGV1	OGV2	PSV	MYCYL	BYCL	TOT	HR	CAR	LGV	OGV1	OGV2	PSV	MYCYL	BYCL	TOT	HR	CAR	LGV	OGV1	OGV2	PSV	MYCYL	BYCL	TOT	HR
07:00-07:15	-	-	-	-	-	-	-	0	0	7	0	0	0	0	0	0	7	48	1	0	0	1	0	0	0	2	43	0	0	0	0	0	0	0	0	1
07:15-07:30	-	-	-	-	-	-	-	0	0	4	2	0	0	0	0	1	6	59	14	0	1	1	0	0	0	16	48	0	0	0	0	0	0	0	0	1
07:30-07:45	-	-	-	-	-	-	-	0	0	11	2	0	1	0	0	0	14	63	4	2	0	1	0	0	0	7	46	1	0	0	0	0	0	0	1	1
07:45-08:00	-	-	-	-	-	-	-	0	0	17	4	0	0	0	0	0	21	65	15	2	0	0	0	1	0	18	52	0	0	0	0	0	0	0	0	0
08:00-08:15	-	-	-	-	-	-	-	0	0	16	1	1	0	0	0	0	18	57	5	1	1	0	0	0	0	7	45	0	0	0	0	0	0	0	0	0
08:15-08:30	-	-	-	-	-	-	-	0	0	9	1	0	0	0	0	0	10	48	9	3	1	0	0	1	0	14	47	0	0	0	0	0	0	0	0	0
08:30-08:45	-	-	-	-	-	-	-	0	0	10	3	0	3	0	0	0	16	47	7	3	0	3	0	0	0	13	40	0	0	0	0	0	0	0	0	0
08:45-09:00	-	-	-	-	-	-	-	0	0	10	0	1	2	0	0	0	13	39	10	1	0	0	0	0	0	11	37	0	0	0	0	0	0	0	0	0
09:00-09:15	-	-	-	-	-	-	-	0	0	9	0	0	0	0	0	0	9	32	5	2	1	1	0	0	0	9	35	0	0	0	0	0	0	0	0	1
09:15-09:30	-	-	-	-	-	-	-	0	0	8	1	0	0	0	0	0	9	36	4	0	1	1	1	0	0	7	36	0	0	0	0	0	0	0	0	1
09:30-09:45	-	-	-	-	-	-	-	0	0	6	2	0	0	0	0	0	8	33	3	2	3	1	1	0	0	10	37	0	0	0	0	0	0	0	0	1
09:45-10:00	-	-	-	-	-	-	-	0	0	2	3	1	0	0	0	1	6	32	5	3	1	0	0	0	0	9	34	0	1	0	0	0	0	0	1	1
10:00-10:15	-	-	-	-	-	-	-	0	0	10	2	1	0	0	0	0	13	36	6	2	0	2	0	0	0	10	29	0	0	0	0	0	0	0	0	0
10:15-10:30	-	-	-	-	-	-	-	0	0	4	2	0	0	0	0	0	6	27	3	4	0	1	0	0	0	8	29	0	0	0	0	0	0	0	0	0
10:30-10:45	-	-	-	-	-	-	-	0	0	3	3	0	1	0	0	0	7	25	5	0	0	2	0	0	0	7	32	0	0	0	0	0	0	0	0	0
10:45-11:00	-	-	-	-	-	-	-	0	0	4	5	1	0	0	0	0	10	28	3	1	0	0	0	0	0	4	32	0	0	0	0	0	0	0	0	0
11:00-11:15	-	-	-	-	-	-	-	0	0	4	0	0	0	0	0	0	4	23	7	3	0	0	0	0	0	10	37	0	0	0	0	0	0	0	0	0
11:15-11:30	-	-	-	-	-	-	-	0	0	4	0	0	0	0	0	0	4	28	5	6	0	0	0	0	0	11	34	0	0	0	0	0	0	0	0	0
11:30-11:45	-	-	-	-	-	-	-	0	0	5	3	1	0	0	1	0	10	32	6	1	0	0	0	0	0	7	29	0	0	0	0	0	0	0	0	1
11:45-12:00	-	-	-	-	-	-	-	0	0	0	2	2	1	0	0	0	5	35	4	3	1	1	0	0	0	9	26	0	0	0	0	0	0	0	0	1
12:00-12:15	-	-	-	-	-	-	-	0	0	7	2	0	0	0	0	0	9	38	5	2	0	0	0	0	0	7	23	0	0	0	0	0	0	0	0	2
12:15-12:30	-	-	-	-	-	-	-	0	0	6	2	0	0	0	0	0	8	39	4	0	0	2	0	0	0	6	21	1	0	0	0	0	0	0	1	2
12:30-12:45	-	-	-	-	-	-	-	0	0	7	2	0	4	0	0	0	13	37	1	2	0	1	0	0	0	4	25	0	0	0	0	0	0	0	0	1
12:45-13:00	-	-	-	-	-	-	-	0	0	6	2	0	0	0	0	0	8	30	2	2	0	1	0	1	0	6	35	1	0	0	0	0	0	0	1	1
13:00-13:15	-	-	-	-	-	-	-	0	0	4	4	2	0	0	0	0	10	27	4	1	0	0	0	0	0	5	38	0	0	0	0	0	0	0	0	0
13:15-13:30	-	-	-	-	-	-	-	0	0	2	3	0	1	0	0	1	6	32	6	3	0	1	0	0	0	10	48	0	0	0	0	0	0	0	0	0
13:30-13:45	-	-	-	-	-	-	-	0	0	4	2	0	0	0	0	0	6	44	12	0	0	1	0	1	0	14	48	0	0	0	0	0	0	0	0	0
13:45-14:00	-	-	-	-	-	-	-	0	0	2	1	0	2	0	0	0	5	49	8	1	0	0	0	0	0	9	38	0	0	0	0	0	0	0	0	0
14:00-14:15	-	-	-	-	-	-	-	0	0	11	1	0	0	0	3	0	15	50	13	1	1	0	0	0	0	15	36	0	0	0	0	0	0	0	0	0
14:15-14:30	-	-	-	-	-	-	-	0	0	11	6	1	0	0	0	0	18	47	6	3	0	1	0	0	0	10	24	0	0	0	0	0	0	0	0	0
14:30-14:45	-	-	-	-	-	-	-	0	0	7	1	1	2	0	0	0	11	40	4	0	0	0	0	0	0	4	22	0	0	0	0	0	0	0	0	0
14:45-15:00	-	-	-	-	-	-	-	0	0	4	1	0	0	0	1	0	6	41	4	0	1	1	0	1	0	7	29	0	0	0	0	0	0	0	0	0
15:00-15:15	-	-	-	-	-	-	-	0	0	9	2	0	1	0	0	0	12	48	2	0	0	1	0	0	0	3	33	0	0	0	0	0	0	0	0	0
15:15-15:30	-	-	-	-	-	-	-	0	0	7	3	0	0	0	1	0	11	44	4	3	0	1	0	0	0	8	41	0	0	0	0	0	0	0	0	0
15:30-15:45	-	-	-	-	-	-	-	0	0	8	4	0	0	0	0	0	12	43	9	1	1	0	0	0	1	11	42	0	0	0	0	0	0	0	0	0
15:45-16:00	-	-	-	-	-	-	-	0	0	10	1	1	1	0	0	0	13	42	8	2	0	0	1	0	0	11	40	0	0	0	0	0	0	0	0	0
16:00-16:15	-	-	-	-	-	-	-	0	0	7	0	0	0	1	0	0	8	42	8	1	2	0	0	0	0	11	39	0	0	0	0	0	0	0	0	0
16:15-16:30	-	-	-	-	-	-	-	0	0	9	0	0	0	0	1	0	10	59	8	0	0	1	0	0	0	9	38	0	0	0	0	0	0	0	0	0
16:30-16:45	-	-	-	-	-	-	-	0	0	7	3	0	0	0	1	0	11	71	7	0	0	2	0	0	0	9	50	0	0	0	0	0	0	0	0	0
16:45-17:00	-	-	-	-	-	-	-	0	0	8	5	0	0	0	0	0	13	79	6	2	0	1	0	1	0	10	53	0	0	0	0	0	0	0	0	0
17:00-17:15	-	-	-	-	-	-	-	0	0	19	5	0	0	0	1	0	25	84	10	0	0	0	0	0	0	10	51	0	0	0	0	0	0	0	0	0
17:15-17:30	-	-	-	-	-	-	-	0	0	19	2	0	0	0	1	0	22	73	19	2	0	0	0	0	0	21	47	0	0	0	0	0	0	0	0	0
17:30-17:45	-	-	-	-	-	-	-	0	0	19	0	0	0	0	0	2	19	62	10	1	0	1	0	0	0	12	34	0	0	0	0	0	0	0	0	0
17:45-18:00	-	-	-	-	-	-	-	0	0	15	1	1	0	0	1	1	18	52	7	1	0	0	0	0	0	8	28	0	0	0	0	0	0	0	0	0
18:00-18:15	-	-	-	-	-	-	-	0	0	14	0	0	0	0	0	0	14	41	6	0	0	0	0	0	0	6	24	0	0	0	0	0	0	0	0	0
18:15-18:30	-	-	-	-	-	-	-	0		10	1	0	0	0	0	0	11		7	1	0	0	0	0	0	8		0	0	0	0	0	0	0	0	
18:30-18:45	-	-	-	-	-	-	-	0		9	0	0	0	0	0	0	9		3	2	0	1	0	0	0	6		0	0	0	0	0	0	0	0	
18:45-19:00	-	-	-	-	-	-	-	0		7	0	0	0	0	0	1	7		4	0	0	0	0	0	0	4		0	0	0	0	0	0	0	0	
12 HR TOTAL	0	0	0	0	0	0	0	0		391	90	14	19	1	11	7	526		308	70	15	31	3	6	1	433		3	1	0	0	0	0	0	4	

SITE: 1 **LOCATION: A303 WESTBOUND SLIPS/OVERTON ROAD, MICHELDEVER, 'DOG-LEG' CROSSROAD** **ROAD: ARM B, A303 WESTBOUND ON-SLIP AND ROAD TO SUTTON SCOTNEY** **DAY/DATE: THURSDAY 24th MAY 2012**

Video Turning Counts
A303 SLIPS/OVERTON ROAD, MICHELDEVER

TIME 15 min period	MOVEMENT 5, BA From: ARM B, A303 WESTBOUND ON-SLIP Left to: ARM A, OVERTON ROAD NORTH									MOVEMENT 6, BD From: ARM B, A303 WESTBOUND ON-SLIP Straight to: ARM D, A303 WESTBOUND OFF-SLIP									MOVEMENT 7, BC From: ARM B, A303 WESTBOUND ON-SLIP Right to: ARM C, OVERTON ROAD SOUTH									MOVEMENT 8, BB From: ARM B, A303 WESTBOUND ON-SLIP 'U' Turn to: ARM B, A303 WESTBOUND ON-SLIP								
	CAR	LGV	OGV1	OGV2	PSV	MYCYL	BYCL	TOT	HR	CAR	LGV	OGV1	OGV2	PSV	MYCYL	BYCL	TOT	HR	CAR	LGV	OGV1	OGV2	PSV	MYCYL	BYCL	TOT	HR	CAR	LGV	OGV1	OGV2	PSV	MYCYL	BYCL	TOT	HR
07:00-07:15	22	1	1	0	0	0	0	24	129	-	-	-	-	-	-	-	0	0	0	0	0	0	0	0	0	0	1	0	0	0	0	0	0	0	0	0
07:15-07:30	16	4	0	0	0	0	1	20	145	-	-	-	-	-	-	-	0	0	0	0	0	0	0	0	0	0	3	0	0	0	0	0	0	0	0	0
07:30-07:45	36	3	1	0	0	1	0	41	175	-	-	-	-	-	-	-	0	0	0	1	0	0	0	0	0	1	5	0	0	0	0	0	0	0	0	0
07:45-08:00	33	9	0	2	0	0	0	44	171	-	-	-	-	-	-	-	0	0	0	0	0	0	0	0	0	0	6	0	0	0	0	0	0	0	0	0
08:00-08:15	35	4	0	0	0	1	0	40	166	-	-	-	-	-	-	-	0	0	0	1	1	0	0	0	0	2	9	0	0	0	0	0	0	0	0	0
08:15-08:30	46	4	0	0	0	0	0	50	150	-	-	-	-	-	-	-	0	0	1	1	0	0	0	0	0	2	7	0	0	0	0	0	0	0	0	0
08:30-08:45	32	5	0	0	0	0	1	37	126	-	-	-	-	-	-	-	0	0	1	1	0	0	0	0	0	2	5	0	0	0	0	0	0	0	0	0
08:45-09:00	28	3	5	1	0	2	0	39	103	-	-	-	-	-	-	-	0	0	1	1	0	0	1	0	0	3	4	0	0	0	0	0	0	0	0	0
09:00-09:15	21	2	0	0	0	1	0	24	82	-	-	-	-	-	-	-	0	0	0	0	0	0	0	0	0	0	1	0	0	0	0	0	0	0	0	0
09:15-09:30	21	1	3	0	0	1	0	26	67	-	-	-	-	-	-	-	0	0	0	0	0	0	0	0	0	0	2	0	0	0	0	0	0	0	0	0
09:30-09:45	10	3	0	1	0	0	0	14	59	-	-	-	-	-	-	-	0	0	1	0	0	0	0	0	0	1	3	0	0	0	0	0	0	0	0	0
09:45-10:00	15	2	0	1	0	0	1	18	58	-	-	-	-	-	-	-	0	0	0	0	0	0	0	0	0	0	4	0	0	0	0	0	0	0	0	0
10:00-10:15	5	4	0	0	0	0	0	9	54	-	-	-	-	-	-	-	0	0	1	0	0	0	0	0	0	1	4	0	0	0	0	0	0	0	0	0
10:15-10:30	15	3	0	0	0	0	0	18	60	-	-	-	-	-	-	-	0	0	1	0	0	0	0	0	0	1	5	0	0	0	0	0	0	0	0	0
10:30-10:45	8	4	0	0	0	1	0	13	55	-	-	-	-	-	-	-	0	0	1	1	0	0	0	0	0	2	5	0	0	0	0	0	0	0	0	0
10:45-11:00	13	1	0	0	0	0	0	14	57	-	-	-	-	-	-	-	0	0	0	0	0	0	0	0	0	0	4	0	0	0	0	0	0	0	0	0
11:00-11:15	15	0	0	0	0	0	0	15	61	-	-	-	-	-	-	-	0	0	2	0	0	0	0	0	0	2	6	0	0	0	0	0	0	0	0	0
11:15-11:30	10	2	1	0	0	0	0	13	57	-	-	-	-	-	-	-	0	0	0	1	0	0	0	0	0	1	4	0	0	0	0	0	0	0	0	0
11:30-11:45	15	0	0	0	0	0	0	15	52	-	-	-	-	-	-	-	0	0	0	0	1	0	0	0	0	1	3	0	0	0	0	0	0	0	0	0
11:45-12:00	15	3	0	0	0	0	0	18	49	-	-	-	-	-	-	-	0	0	0	1	0	1	0	0	0	2	2	0	0	0	0	0	0	0	0	0
12:00-12:15	8	3	0	0	0	0	0	11	42	-	-	-	-	-	-	-	0	0	0	0	0	0	0	0	0	0	3	0	0	0	0	0	0	0	0	0
12:15-12:30	5	2	1	0	0	0	1	8	45	-	-	-	-	-	-	-	0	0	0	0	0	0	0	0	0	0	4	0	0	0	0	0	0	0	0	0
12:30-12:45	9	2	0	1	0	0	0	12	49	-	-	-	-	-	-	-	0	0	0	0	0	0	0	0	0	0	5	0	0	0	0	0	0	0	0	0
12:45-13:00	6	3	2	0	0	0	0	11	48	-	-	-	-	-	-	-	0	0	2	1	0	0	0	0	0	3	5	0	0	0	0	0	0	0	0	0
13:00-13:15	10	3	0	0	0	1	0	14	52	-	-	-	-	-	-	-	0	0	1	0	0	0	0	0	0	1	2	0	0	0	0	0	0	0	0	0
13:15-13:30	8	2	2	0	0	0	0	12	48	-	-	-	-	-	-	-	0	0	0	1	0	0	0	0	0	1	2	0	0	0	0	0	0	0	0	0
13:30-13:45	9	2	0	0	0	0	0	11	46	-	-	-	-	-	-	-	0	0	0	0	0	0	0	0	0	0	3	0	0	0	0	0	0	0	0	0
13:45-14:00	12	2	0	1	0	0	0	15	55	-	-	-	-	-	-	-	0	0	0	0	0	0	0	0	0	0	4	0	0	0	0	0	0	0	0	0
14:00-14:15	8	2	0	0	0	0	0	10	60	-	-	-	-	-	-	-	0	0	1	0	0	0	0	0	0	1	5	0	0	0	0	0	0	0	0	0
14:15-14:30	8	1	0	0	0	1	0	10	61	-	-	-	-	-	-	-	0	0	1	1	0	0	0	0	0	2	4	0	0	0	0	0	0	0	0	0
14:30-14:45	17	2	0	0	0	1	0	20	70	-	-	-	-	-	-	-	0	0	1	0	0	0	0	0	0	1	2	0	0	0	0	0	0	0	0	0
14:45-15:00	13	5	0	1	0	1	0	20	64	-	-	-	-	-	-	-	0	0	0	1	0	0	0	0	0	1	1	0	0	0	0	0	0	0	0	0
15:00-15:15	11	0	0	0	0	0	0	11	67	-	-	-	-	-	-	-	0	0	0	0	0	0	0	0	0	0	2	0	0	0	0	0	0	0	0	0
15:15-15:30	17	2	0	0	0	0	0	19	71	-	-	-	-	-	-	-	0	0	0	0	0	0	0	0	0	0	5	0	0	0	0	0	0	0	0	0
15:30-15:45	13	1	0	0	0	0	0	14	69	-	-	-	-	-	-	-	0	0	0	0	0	0	0	0	0	0	9	0	0	0	0	0	0	0	0	0
15:45-16:00	17	6	0	0	0	0	0	23	73	-	-	-	-	-	-	-	0	0	1	1	0	0	0	0	0	2	12	0	0	0	0	0	0	0	0	0
16:00-16:15	11	4	0	0	0	0	0	15	80	-	-	-	-	-	-	-	0	0	3	0	0	0	0	0	0	3	12	0	0	0	0	0	0	0	0	0
16:15-16:30	14	3	0	0	0	0	0	17	89	-	-	-	-	-	-	-	0	0	2	1	0	0	1	0	0	4	10	0	0	0	0	0	0	0	0	0
16:30-16:45	17	1	0	0	0	0	0	18	96	-	-	-	-	-	-	-	0	0	3	0	0	0	0	0	0	3	6	0	0	0	0	0	0	0	0	0
16:45-17:00	28	1	0	1	0	0	0	30	97	-	-	-	-	-	-	-	0	0	2	0	0	0	0	0	0	2	4	0	0	0	0	0	0	0	0	0
17:00-17:15	20	3	0	0	0	1	0	24	84	-	-	-	-	-	-	-	0	0	1	0	0	0	0	0	0	1	2	0	0	0	0	0	0	0	0	0
17:15-17:30	20	3	0	0	0	1	0	24	81	-	-	-	-	-	-	-	0	0	0	0	0	0	0	0	0	0	1	0	0	0	0	0	0	0	0	0
17:30-17:45	19	0	0	0	0	0	0	19	74	-	-	-	-	-	-	-	0	0	1	0	0	0	0	0	0	1	2	0	0	0	0	0	0	0	0	0
17:45-18:00	13	3	1	0	0	0	0	17	69	-	-	-	-	-	-	-	0	0	0	0	0	0	0	0	0	0	1	0	0	0	0	0	0	0	0	0
18:00-18:15	20	1	0	0	0	0	0	21	67	-	-	-	-	-	-	-	0	0	0	0	0	0	0	0	0	0	3	0	0	0	0	0	0	0	0	0
18:15-18:30	15	2	0	0	0	0	0	17		-	-	-	-	-	-	-	0		1	0	0	0	0	0	0	1		0	0	0	0	0	0	0	0	
18:30-18:45	13	0	0	0	0	1	0	14		-	-	-	-	-	-	-	0		0	0	0	0	0	0	0	0		0	0	0	0	0	0	0	0	
18:45-19:00	15	0	0	0	0	0	0	15		-	-	-	-	-	-	-	0		2	0	0	0	0	0	0	2		0	0	0	0	0	0	0	0	
12 HR TOTAL	787	117	17	9	0	14	4	944		0	0	0	0	0	0	0	0		31	14	2	1	2	0	0	50		0	0	0	0	0	0	0	0	

SITE: 1 LOCATION: A303 WESTBOUND SLIPS/OVERTON ROAD, MICHELDEVER, 'DOG-LEG' CROSSROAD ROAD: ARM C, OVERTON ROAD SOUTH DAY/DATE: THURSDAY 24th MAY 2012

Video Turning Counts
A303 SLIPS/OVERTON ROAD, MICHELDEVER

TIME 15 min period	MOVEMENT 9, CB From: ARM C, OVERTON ROAD SOUTH Left to: ARM B, A303 WESTBOUND ON-SLIP									MOVEMENT 10, CA From: ARM C, OVERTON ROAD SOUTH Straight to: ARM A, OVERTON ROAD NORTH									MOVEMENT 11, CD From: ARM C, OVERTON ROAD SOUTH Right to: ARM D, A303 WESTBOUND OFF-SLIP									MOVEMENT 12, CC From: ARM C, OVERTON ROAD SOUTH 'U' Turn to: ARM C, OVERTON ROAD SOUTH								
	CAR	LGV	OGV1	OGV2	PSV	MYCYL	BYCL	TOT	HR	CAR	LGV	OGV1	OGV2	PSV	MYCYL	BYCL	TOT	HR	CAR	LGV	OGV1	OGV2	PSV	MYCYL	BYCL	TOT	HR	CAR	LGV	OGV1	OGV2	PSV	MYCYL	BYCL	TOT	HR
07:00-07:15	1	0	0	0	0	0	0	1	17	6	1	0	0	0	0	0	7	66	-	-	-	-	-	-	-	0	0	0	0	0	0	0	0	0	0	0	0
07:15-07:30	3	0	0	0	0	0	1	3	25	9	2	0	0	1	1	1	13	78	-	-	-	-	-	-	-	0	0	0	0	0	0	0	0	0	0	0	0
07:30-07:45	2	2	0	0	0	0	0	4	24	20	3	0	0	0	0	0	23	83	-	-	-	-	-	-	-	0	0	0	0	0	0	0	0	0	0	0	0
07:45-08:00	8	1	0	0	0	0	0	9	30	19	4	0	0	0	0	0	23	81	-	-	-	-	-	-	-	0	0	0	0	0	0	0	0	0	0	0	0
08:00-08:15	4	3	0	1	0	1	0	9	25	12	5	0	2	0	0	0	19	73	-	-	-	-	-	-	-	0	0	0	0	0	0	0	0	0	0	0	0
08:15-08:30	1	1	0	0	0	0	0	2	18	14	3	1	0	0	0	0	18	69	-	-	-	-	-	-	-	0	0	0	0	0	0	0	0	0	0	0	0
08:30-08:45	9	1	0	0	0	0	0	10	18	19	2	0	0	0	0	0	21	59	-	-	-	-	-	-	-	0	0	0	0	0	0	0	0	0	0	0	0
08:45-09:00	4	0	0	0	0	0	0	4	10	12	2	0	1	0	0	0	15	49	-	-	-	-	-	-	-	0	0	0	0	0	0	0	0	0	0	0	0
09:00-09:15	2	0	0	0	0	0	0	2	9	10	4	1	0	0	0	0	15	44	-	-	-	-	-	-	-	0	0	0	0	0	0	0	0	0	0	0	0
09:15-09:30	1	1	0	0	0	0	0	2	12	6	2	0	0	0	0	0	8	37	-	-	-	-	-	-	-	0	0	0	0	0	0	0	0	0	0	0	0
09:30-09:45	2	0	0	0	0	0	0	2	15	7	1	1	2	0	0	0	11	34	-	-	-	-	-	-	-	0	0	0	0	0	0	0	0	0	0	0	0
09:45-10:00	0	3	0	0	0	0	0	3	16	5	5	0	0	0	0	0	10	29	-	-	-	-	-	-	-	0	0	0	0	0	0	0	0	0	0	0	0
10:00-10:15	5	0	0	0	0	0	0	5	15	4	4	0	0	0	0	0	8	30	-	-	-	-	-	-	-	0	0	0	0	0	0	0	0	0	0	0	0
10:15-10:30	3	1	0	1	0	0	0	5	12	4	1	0	0	0	0	0	5	32	-	-	-	-	-	-	-	0	0	0	0	0	0	0	0	0	0	0	0
10:30-10:45	2	0	1	0	0	0	0	3	13	5	1	0	0	0	0	0	6	33	-	-	-	-	-	-	-	0	0	0	0	0	0	0	0	0	0	0	0
10:45-11:00	2	0	0	0	0	0	0	2	13	7	3	1	0	0	0	0	11	38	-	-	-	-	-	-	-	0	0	0	0	0	0	0	0	0	0	0	0
11:00-11:15	2	0	0	0	0	0	0	2	13	7	3	0	0	0	0	0	10	44	-	-	-	-	-	-	-	0	0	0	0	0	0	0	0	0	0	0	0
11:15-11:30	5	1	0	0	0	0	0	6	16	5	1	0	0	0	0	0	6	50	-	-	-	-	-	-	-	0	0	0	0	0	0	0	0	0	0	0	0
11:30-11:45	0	2	0	0	1	0	0	3	12	7	1	0	2	0	1	1	11	52	-	-	-	-	-	-	-	0	0	0	0	0	0	0	0	0	0	0	0
11:45-12:00	1	0	1	0	0	0	0	2	10	12	3	0	2	0	0	0	17	45	-	-	-	-	-	-	-	0	0	0	0	0	0	0	0	0	0	0	0
12:00-12:15	3	1	1	0	0	0	0	5	8	14	1	0	1	0	0	0	16	36	-	-	-	-	-	-	-	0	0	0	0	0	0	0	0	0	0	0	0
12:15-12:30	1	1	0	0	0	0	0	2	5	6	1	1	0	0	0	0	8	28	-	-	-	-	-	-	-	0	0	0	0	0	0	0	0	0	0	0	0
12:30-12:45	1	0	0	0	0	0	0	1	8	4	0	0	0	0	0	0	4	33	-	-	-	-	-	-	-	0	0	0	0	0	0	0	0	0	0	0	0
12:45-13:00	0	0	0	0	0	0	0	0	10	5	3	0	0	0	0	0	8	40	-	-	-	-	-	-	-	0	0	0	0	0	0	0	0	0	0	0	0
13:00-13:15	1	1	0	0	0	0	0	2	13	6	2	0	0	0	0	1	8	39	-	-	-	-	-	-	-	0	0	0	0	0	0	0	0	0	0	0	0
13:15-13:30	1	1	3	0	0	0	0	5	13	9	3	1	0	0	0	0	13	40	-	-	-	-	-	-	-	0	0	0	0	0	0	0	0	0	0	0	0
13:30-13:45	2	1	0	0	0	0	0	3	10	5	6	0	0	0	0	0	11	35	-	-	-	-	-	-	-	0	0	0	0	0	0	0	0	0	0	0	0
13:45-14:00	2	1	0	0	0	0	0	3	11	5	2	0	0	0	0	0	7	31	-	-	-	-	-	-	-	0	0	0	0	0	0	0	0	0	0	0	0
14:00-14:15	0	1	0	0	1	0	0	2	10	8	1	0	0	0	0	0	9	34	-	-	-	-	-	-	-	0	0	0	0	0	0	0	0	0	0	0	0
14:15-14:30	1	0	1	0	0	0	0	2	9	7	1	0	0	0	0	0	8	35	-	-	-	-	-	-	-	0	0	0	0	0	0	0	0	0	0	0	0
14:30-14:45	1	3	0	0	0	0	0	4	8	5	1	0	1	0	0	0	7	34	-	-	-	-	-	-	-	0	0	0	0	0	0	0	0	0	0	0	0
14:45-15:00	1	1	0	0	0	0	0	2	8	8	1	1	0	0	0	0	10	45	-	-	-	-	-	-	-	0	0	0	0	0	0	0	0	0	0	0	0
15:00-15:15	1	0	0	0	0	0	0	1	9	9	1	0	0	0	0	0	10	46	-	-	-	-	-	-	-	0	0	0	0	0	0	0	0	0	0	0	0
15:15-15:30	0	1	0	0	0	0	0	1	11	5	1	0	1	0	0	1	7	44	-	-	-	-	-	-	-	0	0	0	0	0	0	0	0	0	0	0	0
15:30-15:45	2	1	0	0	1	0	0	4	13	13	1	2	1	0	1	0	18	45	-	-	-	-	-	-	-	0	0	0	0	0	0	0	0	0	0	0	0
15:45-16:00	3	0	0	0	0	0	0	3	15	11	0	0	0	0	0	0	11	36	-	-	-	-	-	-	-	0	0	0	0	0	0	0	0	0	0	0	0
16:00-16:15	1	1	0	1	0	0	0	3	14	7	0	1	0	0	0	0	8	34	-	-	-	-	-	-	-	0	0	0	0	0	0	0	0	0	0	0	0
16:15-16:30	1	2	0	0	0	0	0	3	20	7	1	0	0	0	0	0	8	39	-	-	-	-	-	-	-	0	0	0	0	0	0	0	0	0	0	0	0
16:30-16:45	4	2	0	0	0	0	0	6	20	7	1	0	1	0	0	0	9	44	-	-	-	-	-	-	-	0	0	0	0	0	0	0	0	0	0	0	0
16:45-17:00	2	0	0	0	0	0	0	2	17	6	2	0	0	0	1	0	9	57	-	-	-	-	-	-	-	0	0	0	0	0	0	0	0	0	0	0	0
17:00-17:15	7	2	0	0	0	0	0	9	16	10	3	0	0	0	0	0	13	59	-	-	-	-	-	-	-	0	0	0	0	0	0	0	0	0	0	0	0
17:15-17:30	2	1	0	0	0	0	0	3	11	11	2	0	0	0	0	0	13	63	-	-	-	-	-	-	-	0	0	0	0	0	0	0	0	0	0	0	0
17:30-17:45	3	0	0	0	0	0	0	3	11	18	3	1	0	0	0	0	22	60	-	-	-	-	-	-	-	0	0	0	0	0	0	0	0	0	0	0	0
17:45-18:00	1	0	0	0	0	0	0	1	9	10	0	0	0	0	1	1	11	50	-	-	-	-	-	-	-	0	0	0	0	0	0	0	0	0	0	0	0
18:00-18:15	2	1	0	0	1	0	0	4	8	16	1	0	0	0	0	0	17	51	-	-	-	-	-	-	-	0	0	0	0	0	0	0	0	0	0	0	0
18:15-18:30	3	0	0	0	0	0	0	3		8	1	0	1	0	0	0	10		-	-	-	-	-	-	-	0		0	0	0	0	0	0	0	0	
18:30-18:45	1	0	0	0	0	0	0	1		11	1	0	0	0	0	0	12		-	-	-	-	-	-	-	0		0	0	0	0	0	0	0	0	
18:45-19:00	0	0	0	0	0	0	0	0		11	1	0	0	0	0	0	12		-	-	-	-	-	-	-	0		0	0	0	0	0	0	0	0	
12 HR TOTAL	104	38	7	3	4	1	1	157		432	92	11	15	1	5	5	556		0	0	0	0	0	0	0	0		0	0	0	0	0	0	0	0	

SITE: 1 LOCATION: A303 WESTBOUND SLIPS/OVERTON ROAD, MICHELDEVER, 'DOG-LEG' CROSSROAD ROAD: ARM D, A303 WESTBOUND OFF-SLIP DAY/DATE: THURSDAY 24th MAY 2012

Video Turning Counts
A303 SLIPS/OVERTON ROAD, MICHELDEVER

TIME	MOVEMENT 13, DC									MOVEMENT 14, DB									MOVEMENT 15, DA									MOVEMENT 16, DD								
	From:	ARM D, A303 WESTBOUND OFF-SLIP								From:	ARM D, A303 WESTBOUND OFF-SLIP								From:	ARM D, A303 WESTBOUND OFF-SLIP								From:	ARM D, A303 WESTBOUND OFF-SLIP							
15 min period	Left to:	ARM C, OVERTON ROAD SOUTH								Straight to:	ARM B, A303 WESTBOUND ON-SLIP								Right to:	ARM A, OVERTON ROAD NORTH								'U' Turn to:	ARM D, A303 WESTBOUND OFF-SLIP							
	CAR	LGV	OGV1	OGV2	PSV	MYCYL	BYCL	TOT	HR	CAR	LGV	OGV1	OGV2	PSV	MYCYL	BYCL	TOT	HR	CAR	LGV	OGV1	OGV2	PSV	MYCYL	BYCL	TOT	HR	CAR	LGV	OGV1	OGV2	PSV	MYCYL	BYCL	TOT	HR
07:00-07:15	0	0	0	0	0	0	0	0	14	7	1	0	1	0	0	0	9	64	3	2	0	1	0	0	0	6	35	-	-	-	-	-	-	-	0	0
07:15-07:30	1	0	0	0	0	0	0	1	18	9	6	0	0	0	0	0	15	75	6	2	0	0	0	0	0	8	34	-	-	-	-	-	-	-	0	0
07:30-07:45	2	1	0	0	0	0	0	3	24	18	3	0	0	0	2	0	23	79	12	0	0	0	0	0	0	12	34	-	-	-	-	-	-	-	0	0
07:45-08:00	6	4	0	0	0	0	0	10	24	13	4	0	0	0	0	0	17	75	4	4	0	1	0	0	0	9	32	-	-	-	-	-	-	-	0	0
08:00-08:15	4	0	0	0	0	0	0	4	18	18	2	0	0	0	0	0	20	70	4	1	0	0	0	0	0	5	32	-	-	-	-	-	-	-	0	0
08:15-08:30	5	2	0	0	0	0	0	7	16	18	1	0	0	0	0	0	19	62	6	1	0	1	0	0	0	8	41	-	-	-	-	-	-	-	0	0
08:30-08:45	3	0	0	0	0	0	0	3	12	19	0	0	0	0	0	0	19	57	7	1	2	0	0	0	0	10	42	-	-	-	-	-	-	-	0	0
08:45-09:00	3	0	1	0	0	0	0	4	13	11	1	0	0	0	0	0	12	50	9	0	0	0	0	0	0	9	41	-	-	-	-	-	-	-	0	0
09:00-09:15	2	0	0	0	0	0	0	2	11	10	2	0	0	0	0	0	12	46	9	4	1	0	0	0	0	14	45	-	-	-	-	-	-	-	0	0
09:15-09:30	2	1	0	0	0	0	0	3	12	12	1	0	1	0	0	0	14	45	7	1	1	0	0	0	0	9	34	-	-	-	-	-	-	-	0	0
09:30-09:45	2	1	1	0	0	0	0	4	14	11	1	0	0	0	0	0	12	41	7	1	0	1	0	0	0	9	34	-	-	-	-	-	-	-	0	0
09:45-10:00	1	1	0	0	0	0	0	2	12	5	2	0	0	0	1	0	8	37	9	2	0	1	0	1	0	13	34	-	-	-	-	-	-	-	0	0
10:00-10:15	3	0	0	0	0	0	0	3	15	10	1	0	0	0	0	0	11	36	2	1	0	0	0	0	0	3	34	-	-	-	-	-	-	-	0	0
10:15-10:30	5	0	0	0	0	0	0	5	15	6	2	2	0	0	0	0	10	38	7	2	0	0	0	0	0	9	40	-	-	-	-	-	-	-	0	0
10:30-10:45	0	1	1	0	0	0	0	2	13	8	0	0	0	0	0	0	8	40	8	1	0	0	0	0	0	9	41	-	-	-	-	-	-	-	0	0
10:45-11:00	4	0	1	0	0	0	0	5	13	6	1	0	0	0	0	0	7	51	12	1	0	0	0	0	0	13	41	-	-	-	-	-	-	-	0	0
11:00-11:15	3	0	0	0	0	0	0	3	11	10	2	1	0	0	0	0	13	56	8	0	0	1	0	0	0	9	43	-	-	-	-	-	-	-	0	0
11:15-11:30	1	2	0	0	0	0	0	3	11	11	1	0	0	0	0	0	12	54	8	1	1	0	0	0	0	10	39	-	-	-	-	-	-	-	0	0
11:30-11:45	1	1	0	0	0	0	0	2	12	15	4	0	0	0	0	0	19	57	8	1	0	0	0	0	0	9	38	-	-	-	-	-	-	-	0	0
11:45-12:00	3	0	0	0	0	0	0	3	11	9	1	1	0	0	1	0	12	51	10	3	1	1	0	0	0	15	42	-	-	-	-	-	-	-	0	0
12:00-12:15	3	0	0	0	0	0	0	3	10	5	2	1	1	1	1	0	11	54	4	0	0	1	0	0	0	5	34	-	-	-	-	-	-	-	0	0
12:15-12:30	4	0	0	0	0	0	0	4	14	9	6	0	0	0	0	0	15	55	6	1	0	2	0	0	0	9	36	-	-	-	-	-	-	-	0	0
12:30-12:45	1	0	0	0	0	0	0	1	18	10	2	1	0	0	0	0	13	50	12	0	1	0	0	0	0	13	34	-	-	-	-	-	-	-	0	0
12:45-13:00	1	0	1	0	0	0	0	2	19	11	4	0	0	0	0	0	15	49	6	1	0	0	0	0	0	7	33	-	-	-	-	-	-	-	0	0
13:00-13:15	4	3	0	0	0	0	0	7	27	8	4	0	0	0	0	0	12	46	6	0	0	1	0	0	0	7	32	-	-	-	-	-	-	-	0	0
13:15-13:30	5	2	1	0	0	0	0	8	23	9	0	1	0	0	0	0	10	45	6	0	0	1	0	0	0	7	32	-	-	-	-	-	-	-	0	0
13:30-13:45	0	1	1	0	0	0	0	2	19	8	3	1	0	0	0	0	12	52	10	1	1	0	0	0	0	12	30	-	-	-	-	-	-	-	0	0
13:45-14:00	9	0	0	1	0	0	0	10	21	10	1	0	0	0	1	0	12	51	4	1	1	0	0	0	0	6	24	-	-	-	-	-	-	-	0	0
14:00-14:15	2	0	0	0	0	1	0	3	16	9	1	0	1	0	0	0	11	60	5	1	1	0	0	0	0	7	26	-	-	-	-	-	-	-	0	0
14:15-14:30	2	2	0	0	0	0	0	4	16	16	0	0	1	0	0	0	17	61	3	1	0	1	0	0	0	5	28	-	-	-	-	-	-	-	0	0
14:30-14:45	4	0	0	0	0	0	0	4	16	8	3	0	0	0	0	0	11	61	1	4	0	1	0	0	0	6	29	-	-	-	-	-	-	-	0	0
14:45-15:00	5	0	0	0	0	0	0	5	20	17	4	0	0	0	0	0	21	60	6	1	0	1	0	0	0	8	33	-	-	-	-	-	-	-	0	0
15:00-15:15	3	0	0	0	0	0	0	3	19	4	3	3	1	0	1	0	12	54	7	1	0	1	0	0	0	9	39	-	-	-	-	-	-	-	0	0
15:15-15:30	4	0	0	0	0	0	0	4	20	15	1	1	0	0	0	0	17	60	5	0	1	0	0	0	0	6	44	-	-	-	-	-	-	-	0	0
15:30-15:45	8	0	0	0	0	0	0	8	19	8	2	0	0	0	0	0	10	63	7	2	0	1	0	0	0	10	55	-	-	-	-	-	-	-	0	0
15:45-16:00	3	1	0	0	0	0	0	4	15	9	5	0	0	0	1	0	15	73	8	4	0	2	0	0	0	14	62	-	-	-	-	-	-	-	0	0
16:00-16:15	2	2	0	0	0	0	0	4	18	13	5	0	0	0	0	0	18	84	8	4	0	2	0	0	0	14	57	-	-	-	-	-	-	-	0	0
16:15-16:30	3	0	0	0	0	0	0	3	17	17	3	0	0	0	0	0	20	86	13	4	0	0	0	0	0	17	53	-	-	-	-	-	-	-	0	0
16:30-16:45	3	1	0	0	0	0	0	4	17	13	6	0	0	0	1	0	20	102	13	3	1	0	0	0	0	17	47	-	-	-	-	-	-	-	0	0
16:45-17:00	6	1	0	0	0	0	0	7	17	23	2	1	0	0	0	0	26	116	7	2	0	0	0	0	0	9	41	-	-	-	-	-	-	-	0	0
17:00-17:15	3	0	0	0	0	0	0	3	16	18	2	0	0	0	0	0	20	123	6	4	0	0	0	0	0	10	46	-	-	-	-	-	-	-	0	0
17:15-17:30	3	0	0	0	0	0	0	3	17	33	3	0	0	0	0	0	36	126	10	1	0	0	0	0	0	11	42	-	-	-	-	-	-	-	0	0
17:30-17:45	2	2	0	0	0	0	0	4	21	33	1	0	0	0	0	0	34	125	10	1	0	0	0	0	0	11	41	-	-	-	-	-	-	-	0	0
17:45-18:00	6	0	0	0	0	0	0	6	29	32	1	0	0	0	0	0	33	123	12	2	0	0	0	0	0	14	44	-	-	-	-	-	-	-	0	0
18:00-18:15	2	1	0	0	1	0	0	4	31	20	2	0	0	1	0	0	23	101	6	0	0	0	0	0	0	6	31	-	-	-	-	-	-	-	0	0
18:15-18:30	7	0	0	0	0	0	0	7		35	0	0	0	0	0	0	35		9	1	0	0	0	0	0	10		-	-	-	-	-	-	-	0	
18:30-18:45	11	1	0	0	0	0	0	12		27	3	0	0	0	2	0	32		13	0	0	1	0	0	0	14		-	-	-	-	-	-	-	0	
18:45-19:00	7	1	0	0	0	0	0	8		10	0	0	0	0	1	0	11		1	0	0	0	0	0	0	1		-	-	-	-	-	-	-	0	
12 HR TOTAL	164	32	7	1	1	1	0	206		656	105	13	6	2	12	0	794		350	69	12	22	0	1	0	454		0	0	0	0	0	0	0	0	

Video Turning Counts
A303 SLIPS/OVERTON ROAD, MICHELDEVER

SITE: 1 **LOCATION: A303 WESTBOUND SLIPS/OVERTON ROAD, MICHELDEVER, 'DOG-LEG' CROSSROAD**

DAY/DATE: THURSDAY 24th MAY 2012 **12 HOUR SUMMARY**

TIME	MOVEMENT: ALL IN TO JUNCTION						MOVEMENT: ALL OUT OF JUNCTION					
	A	B	C	D	TOT	HR	A	B	C	D	TOT	HR
07:00-07:15	9	24	8	15	56	418	37	12	7	0	56	418
07:15-07:30	22	20	16	24	82	486	41	34	7	0	82	486
07:30-07:45	22	42	27	38	129	534	77	34	18	0	129	534
07:45-08:00	39	44	32	36	151	536	76	44	31	0	151	536
08:00-08:15	25	42	28	29	124	495	64	36	24	0	124	495
08:15-08:30	24	52	20	34	130	458	76	35	19	0	130	458
08:30-08:45	29	39	31	32	131	406	68	42	21	0	131	406
08:45-09:00	24	42	19	25	110	346	63	27	20	0	110	346
09:00-09:15	18	24	17	28	87	306	53	23	11	0	87	306
09:15-09:30	16	26	10	26	78	282	43	23	12	0	78	282
09:30-09:45	18	15	13	25	71	271	34	24	13	0	71	271
09:45-10:00	16	18	13	23	70	257	42	20	8	0	70	257
10:00-10:15	23	10	13	17	63	253	20	26	17	0	63	253
10:15-10:30	14	19	10	24	67	258	32	23	12	0	67	258
10:30-10:45	14	15	9	19	57	257	28	18	11	0	57	257
10:45-11:00	14	14	13	25	66	277	38	13	15	0	66	277
11:00-11:15	14	17	12	25	68	294	34	25	9	0	68	294
11:15-11:30	15	14	12	25	66	293	29	29	8	0	66	293
11:30-11:45	17	16	14	30	77	288	35	29	13	0	77	288
11:45-12:00	14	20	19	30	83	272	50	23	10	0	83	272
12:00-12:15	16	11	21	19	67	250	32	23	12	0	67	250
12:15-12:30	15	8	10	28	61	249	26	23	12	0	61	249
12:30-12:45	17	12	5	27	61	260	29	18	14	0	61	260
12:45-13:00	15	14	8	24	61	270	27	21	13	0	61	270
13:00-13:15	15	15	10	26	66	276	29	19	18	0	66	276
13:15-13:30	16	13	18	25	72	283	32	25	15	0	72	283
13:30-13:45	20	11	14	26	71	287	34	29	8	0	71	287
13:45-14:00	14	15	10	28	67	284	28	24	15	0	67	284
14:00-14:15	30	11	11	21	73	297	26	28	19	0	73	297
14:15-14:30	28	12	10	26	76	285	23	29	24	0	76	285
14:30-14:45	15	21	11	21	68	282	33	19	16	0	68	282
14:45-15:00	13	21	12	34	80	301	38	30	12	0	80	301
15:00-15:15	15	11	11	24	61	317	30	16	15	0	61	317
15:15-15:30	19	19	8	27	73	340	32	26	15	0	73	340
15:30-15:45	23	14	22	28	87	358	42	25	20	0	87	358
15:45-16:00	24	25	14	33	96	368	48	29	19	0	96	368
16:00-16:15	19	18	11	36	84	380	37	32	15	0	84	380
16:15-16:30	19	21	11	40	91	411	42	32	17	0	91	411
16:30-16:45	20	21	15	41	97	453	44	35	18	0	97	453
16:45-17:00	23	32	11	42	108	481	48	38	22	0	108	481
17:00-17:15	35	25	22	33	115	481	47	39	29	0	115	481
17:15-17:30	43	24	16	50	133	461	48	60	25	0	133	461
17:30-17:45	31	20	25	49	125	430	52	49	24	0	125	430
17:45-18:00	26	17	12	53	108	405	42	42	24	0	108	405
18:00-18:15	20	21	21	33	95	357	44	33	18	0	95	357
18:15-18:30	19	18	13	52	102		37	46	19	0	102	
18:30-18:45	15	14	13	58	100		40	39	21	0	100	
18:45-19:00	11	17	12	20	60		28	15	17	0	60	
12 HR TOTAL	963	994	713	1454	4124		1958	1384	782	0	4124	

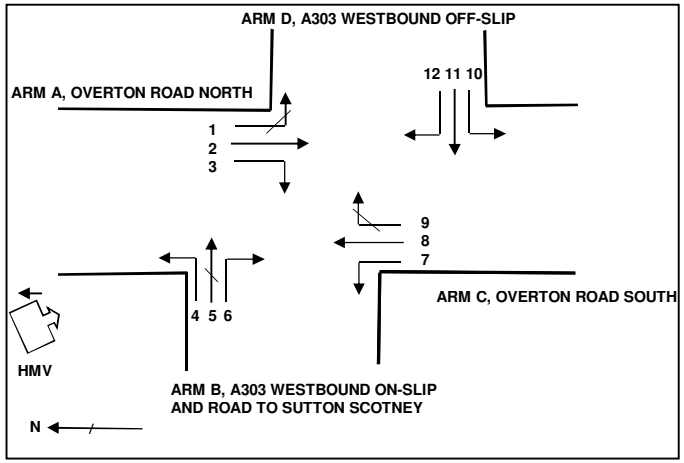

Video Turning Counts
A303 SLIPS/OVERTON ROAD, MICHELDEVER

SITE: 2 **LOCATION: A303 EASTBOUND SLIPS/OVERTON ROAD, MICHELDEVER, 'DOG-LEG' CROSSROAD** **ROAD: ARM A, OVERTON ROAD NORTH** **DAY/DATE: THURSDAY 24th MAY 2012**

TIME	MOVEMENT 1, AD									MOVEMENT 2, AC									MOVEMENT 3, AB									MOVEMENT 4, AA								
15 min period	From: ARM A, OVERTON ROAD NORTH									From: ARM A, OVERTON ROAD NORTH									From: ARM A, OVERTON ROAD NORTH									From: ARM A, OVERTON ROAD NORTH								
	Left to: ARM D, A303 EASTBOUND ON-SLIP									Strt to: ARM C, OVERTON ROAD SOUTH									Right to: ARM B, A303 EASTBOUND OFF-SLIP									U'turn to: ARM A, OVERTON ROAD NORTH								
	CAR	LGV	OGV1	OGV2	PSV	MYCYL	BYCL	TOT	HR	CAR	LGV	OGV1	OGV2	PSV	MYCYL	BYCL	TOT	HR	CAR	LGV	OGV1	OGV2	PSV	MYCYL	BYCL	TOT	HR	CAR	LGV	OGV1	OGV2	PSV	MYCYL	BYCL	TOT	HR
07:00-07:15	4	0	0	0	0	0	0	4	32	7	0	0	1	0	0	0	8	67	-	-	-	-	-	-	-	0	0	0	0	0	0	0	0	0	0
07:15-07:30	9	1	0	0	0	0	0	10	39	18	1	1	0	0	0	1	20	77	-	-	-	-	-	-	-	0	0	0	0	0	0	0	0	0	0
07:30-07:45	11	2	0	0	0	1	1	14	39	10	3	0	0	0	0	0	13	75	-	-	-	-	-	-	-	0	0	0	0	0	0	0	0	0	0
07:45-08:00	3	0	0	0	0	1	0	4	38	21	4	0	0	0	1	0	26	85	-	-	-	-	-	-	-	0	0	0	0	0	0	0	0	0	0
08:00-08:15	9	2	0	0	0	0	0	11	43	17	1	0	0	0	0	0	18	79	-	-	-	-	-	-	-	0	0	0	0	0	0	0	0	0	0
08:15-08:30	8	1	0	1	0	0	0	10	37	13	3	1	0	0	1	0	18	76	-	-	-	-	-	-	-	0	0	0	0	0	0	0	0	0	0
08:30-08:45	11	0	0	2	0	0	0	13	32	15	3	0	5	0	0	0	23	65	-	-	-	-	-	-	-	0	0	0	0	0	0	0	0	0	0
08:45-09:00	7	1	0	1	0	0	0	9	24	17	1	0	2	0	0	0	20	57	-	-	-	-	-	-	-	0	0	0	0	0	0	0	0	0	0
09:00-09:15	3	0	0	2	0	0	0	5	20	12	1	1	1	0	0	0	15	51	-	-	-	-	-	-	-	0	0	0	0	0	0	0	0	0	0
09:15-09:30	4	1	0	0	0	0	0	5	18	6	0	1	0	0	0	0	7	54	-	-	-	-	-	-	-	0	0	0	0	0	0	0	0	0	0
09:30-09:45	4	0	1	0	0	0	0	5	17	8	2	3	1	1	0	0	15	58	-	-	-	-	-	-	-	0	0	0	0	0	0	0	0	0	0
09:45-10:00	3	2	0	0	0	0	0	5	16	7	5	2	0	0	0	1	14	54	-	-	-	-	-	-	-	0	0	0	0	0	0	0	0	0	0
10:00-10:15	2	0	0	1	0	0	1	3	17	13	2	1	2	0	0	0	18	47	-	-	-	-	-	-	-	0	0	0	0	0	0	0	0	0	0
10:15-10:30	3	1	0	0	0	0	0	4	16	5	5	0	1	0	0	0	11	41	-	-	-	-	-	-	-	0	0	0	0	0	0	0	0	0	0
10:30-10:45	3	0	1	0	0	0	0	4	17	5	3	0	3	0	0	0	11	44	-	-	-	-	-	-	-	0	0	0	0	0	0	0	0	0	0
10:45-11:00	3	2	0	1	0	0	0	6	24	5	2	0	0	0	0	0	7	46	-	-	-	-	-	-	-	0	0	0	0	0	0	0	0	0	0
11:00-11:15	1	1	0	0	0	0	0	2	24	10	2	0	0	0	0	0	12	49	-	-	-	-	-	-	-	0	0	0	0	0	0	0	0	0	0
11:15-11:30	5	0	0	0	0	0	0	5	28	9	5	0	0	0	0	0	14	50	-	-	-	-	-	-	-	0	0	0	0	0	0	0	0	0	0
11:30-11:45	7	3	1	0	0	0	0	11	28	7	4	1	0	0	1	0	13	49	-	-	-	-	-	-	-	0	0	0	0	0	0	0	0	0	0
11:45-12:00	3	2	0	1	0	0	0	6	28	2	5	2	1	0	0	0	10	46	-	-	-	-	-	-	-	0	0	0	0	0	0	0	0	0	0
12:00-12:15	5	1	0	0	0	0	0	6	30	10	3	0	0	0	0	0	13	49	-	-	-	-	-	-	-	0	0	0	0	0	0	0	0	0	0
12:15-12:30	4	1	0	0	0	0	0	5	29	9	2	0	2	0	0	0	13	44	-	-	-	-	-	-	-	0	0	0	0	0	0	0	0	0	0
12:30-12:45	6	3	1	1	0	0	0	11	31	2	4	0	4	0	0	0	10	44	-	-	-	-	-	-	-	0	0	0	0	0	0	0	0	0	0
12:45-13:00	7	1	0	0	0	0	0	8	25	7	4	0	1	0	1	0	13	49	-	-	-	-	-	-	-	0	0	0	0	0	0	0	0	0	0
13:00-13:15	5	0	0	0	0	0	0	5	21	4	4	0	0	0	0	0	8	46	-	-	-	-	-	-	-	0	0	0	0	0	0	0	0	0	0
13:15-13:30	3	1	0	3	0	0	0	7	20	5	6	0	2	0	0	0	13	64	-	-	-	-	-	-	-	0	0	0	0	0	0	0	0	0	0
13:30-13:45	2	2	1	0	0	0	0	5	21	11	2	0	1	0	1	0	15	69	-	-	-	-	-	-	-	0	0	0	0	0	0	0	0	0	0
13:45-14:00	3	0	0	1	0	0	0	4	23	8	0	0	2	0	0	0	10	65	-	-	-	-	-	-	-	0	0	0	0	0	0	0	0	0	0
14:00-14:15	3	1	0	0	0	0	0	4	23	21	1	1	0	0	3	0	26	63	-	-	-	-	-	-	-	0	0	0	0	0	0	0	0	0	0
14:15-14:30	4	3	0	1	0	0	0	8	25	13	4	1	0	0	0	0	18	51	-	-	-	-	-	-	-	0	0	0	0	0	0	0	0	0	0
14:30-14:45	6	0	0	1	0	0	0	7	26	8	1	1	1	0	0	0	11	47	-	-	-	-	-	-	-	0	0	0	0	0	0	0	0	0	0
14:45-15:00	3	0	0	1	0	0	0	4	30	5	1	0	1	0	1	0	8	51	-	-	-	-	-	-	-	0	0	0	0	0	0	0	0	0	0
15:00-15:15	4	2	0	0	0	0	0	6	34	10	2	0	2	0	0	0	14	63	-	-	-	-	-	-	-	0	0	0	0	0	0	0	0	0	0
15:15-15:30	6	3	0	0	0	0	0	9	38	8	4	0	1	0	1	0	14	60	-	-	-	-	-	-	-	0	0	0	0	0	0	0	0	0	0
15:30-15:45	10	1	0	0	0	0	0	11	39	12	3	0	0	0	0	1	15	62	-	-	-	-	-	-	-	0	0	0	0	0	0	0	0	0	0
15:45-16:00	6	2	0	0	0	0	0	8	42	14	3	1	1	1	0	0	20	60	-	-	-	-	-	-	-	0	0	0	0	0	0	0	0	0	0
16:00-16:15	9	0	0	1	0	0	0	10	41	9	1	1	0	0	0	0	11	57	-	-	-	-	-	-	-	0	0	0	0	0	0	0	0	0	0
16:15-16:30	9	1	0	0	0	0	0	10	43	14	0	0	1	0	1	0	16	75	-	-	-	-	-	-	-	0	0	0	0	0	0	0	0	0	0
16:30-16:45	7	4	0	1	0	2	0	14	43	9	2	0	2	0	0	0	13	97	-	-	-	-	-	-	-	0	0	0	0	0	0	0	0	0	0
16:45-17:00	6	0	0	1	0	0	0	7	38	12	4	0	1	0	0	0	17	109	-	-	-	-	-	-	-	0	0	0	0	0	0	0	0	0	0
17:00-17:15	5	5	0	2	0	0	0	12	40	24	4	0	0	0	1	0	29	107	-	-	-	-	-	-	-	0	0	0	0	0	0	0	0	0	0
17:15-17:30	8	2	0	0	0	0	0	10	37	34	3	0	0	0	1	0	38	92	-	-	-	-	-	-	-	0	0	0	0	0	0	0	0	0	0
17:30-17:45	7	1	0	1	0	0	0	9	29	24	1	0	0	0	0	0	25	69	-	-	-	-	-	-	-	0	0	0	0	0	0	0	0	0	0
17:45-18:00	8	1	0	0	0	0	0	9	26	15	0	0	0	0	0	0	15	55	-	-	-	-	-	-	-	0	0	0	0	0	0	0	0	0	0
18:00-18:15	9	0	0	0	0	0	0	9	20	14	0	0	0	0	0	0	14	49	-	-	-	-	-	-	-	0	0	0	0	0	0	0	0	0	0
18:15-18:30	2	0	0	0	0	0	0	2		14	1	0	0	0	0	0	15		-	-	-	-	-	-	-	0		0	0	0	0	0	0	0	0	
18:30-18:45	5	0	0	0	0	1	0	6		8	2	0	1	0	0	0	11		-	-	-	-	-	-	-	0		0	0	0	0	0	0	0	0	
18:45-19:00	3	0	0	0	0	0	0	3		9	0	0	0	0	0	1	9		-	-	-	-	-	-	-	0		0	0	0	0	0	0	0	0	
12 HR TOTAL	258	54	5	23	0	5	2	345		540	114	18	40	2	13	4	727		0	0	0	0	0	0	0	0		0	0	0	0	0	0	0	0	

SITE: 2 **LOCATION: A303 EASTBOUND SLIPS/OVERTON ROAD, MICHELDEVER, 'DOG-LEG' CROSSROAD** **ROAD: ARM B, A303 EASTBOUND OFF-SLIP** **DAY/DATE: THURSDAY 24th MAY 2012**

Video Turning Counts
A303 SLIPS/OVERTON ROAD, MICHELDEVER

TIME 15 min period	MOVEMENT 5, BA From: ARM B, A303 EASTBOUND OFF-SLIP Left to: ARM A, OVERTON ROAD NORTH									MOVEMENT 6, BD From: ARM B, A303 EASTBOUND OFF-SLIP Straight to: ARM D, A303 EASTBOUND ON-SLIP									MOVEMENT 7, BC From: ARM B, A303 EASTBOUND OFF-SLIP Right to: ARM C, OVERTON ROAD SOUTH									MOVEMENT 8, BB From: ARM B, A303 EASTBOUND OFF-SLIP 'U' Turn to: ARM B, A303 EASTBOUND OFF-SLIP								
	CAR	LGV	OGV1	OGV2	PSV	MYCYL	BYCL	TOT	HR	CAR	LGV	OGV1	OGV2	PSV	MYCYL	BYCL	TOT	HR	CAR	LGV	OGV1	OGV2	PSV	MYCYL	BYCL	TOT	HR	CAR	LGV	OGV1	OGV2	PSV	MYCYL	BYCL	TOT	HR
07:00-07:15	1	0	0	0	0	0	0	1	24	0	0	0	0	0	0	0	0	3	0	0	0	0	0	0	0	0	14	-	-	-	-	-	-	-	0	0
07:15-07:30	2	3	0	1	0	0	0	6	29	0	0	0	0	0	0	0	0	3	0	1	0	0	0	0	0	1	17	-	-	-	-	-	-	-	0	0
07:30-07:45	7	2	0	1	0	0	0	10	31	0	0	0	0	0	0	0	0	4	2	1	0	1	0	0	0	4	20	-	-	-	-	-	-	-	0	0
07:45-08:00	5	1	0	1	0	0	0	7	32	3	0	0	0	0	0	0	3	5	7	2	0	0	0	0	0	9	21	-	-	-	-	-	-	-	0	0
08:00-08:15	4	1	0	1	0	0	0	6	34	0	0	0	0	0	0	0	0	3	1	0	2	0	0	0	0	3	15	-	-	-	-	-	-	-	0	0
08:15-08:30	5	2	0	1	0	0	0	8	33	1	0	0	0	0	0	0	1	5	3	1	0	0	0	0	0	4	13	-	-	-	-	-	-	-	0	0
08:30-08:45	7	2	0	2	0	0	0	11	33	0	1	0	0	0	0	0	1	4	2	2	0	1	0	0	0	5	14	-	-	-	-	-	-	-	0	0
08:45-09:00	8	0	1	0	0	0	0	9	27	1	0	0	0	0	0	0	1	5	2	0	1	0	0	0	0	3	12	-	-	-	-	-	-	-	0	0
09:00-09:15	4	1	0	0	0	0	0	5	26	1	1	0	0	0	0	0	2	5	1	0	0	0	0	0	0	1	10	-	-	-	-	-	-	-	0	0
09:15-09:30	3	5	0	0	0	0	0	8	23	0	0	0	0	0	0	0	0	5	3	1	0	0	1	0	0	5	10	-	-	-	-	-	-	-	0	0
09:30-09:45	3	2	0	0	0	0	0	5	18	2	0	0	0	0	0	0	2	5	1	2	0	0	0	0	0	3	7	-	-	-	-	-	-	-	0	0
09:45-10:00	3	3	1	1	0	0	0	8	17	1	0	0	0	0	0	0	1	3	0	1	0	0	0	0	0	1	5	-	-	-	-	-	-	-	0	0
10:00-10:15	1	1	0	0	0	0	0	2	14	2	0	0	0	0	0	0	2	2	1	0	0	0	0	0	0	1	11	-	-	-	-	-	-	-	0	0
10:15-10:30	2	0	0	1	0	0	0	3	15	0	0	0	0	0	0	0	0	0	2	0	0	0	0	0	0	2	10	-	-	-	-	-	-	-	0	0
10:30-10:45	2	0	1	1	0	0	0	4	15	0	0	0	0	0	0	0	0	0	1	0	0	0	0	0	0	1	8	-	-	-	-	-	-	-	0	0
10:45-11:00	4	1	0	0	0	0	0	5	13	0	0	0	0	0	0	0	0	1	2	4	1	0	0	0	0	7	9	-	-	-	-	-	-	-	0	0
11:00-11:15	2	1	0	0	0	0	0	3	11	0	0	0	0	0	0	0	0	1	0	0	0	0	0	0	0	0	4	-	-	-	-	-	-	-	0	0
11:15-11:30	2	1	0	0	0	0	0	3	14	0	0	0	0	0	0	0	0	1	0	0	0	0	0	0	0	0	6	-	-	-	-	-	-	-	0	0
11:30-11:45	2	0	0	0	0	0	0	2	17	0	1	0	0	0	0	0	1	1	2	0	0	0	0	0	0	2	7	-	-	-	-	-	-	-	0	0
11:45-12:00	1	0	0	2	0	0	0	3	21	0	0	0	0	0	0	0	0	2	0	0	1	1	0	0	0	2	10	-	-	-	-	-	-	-	0	0
12:00-12:15	3	2	0	1	0	0	0	6	24	0	0	0	0	0	0	0	0	3	2	0	0	0	0	0	0	2	8	-	-	-	-	-	-	-	0	0
12:15-12:30	3	1	0	2	0	0	0	6	22	0	0	0	0	0	0	0	0	4	1	0	0	0	0	0	0	1	10	-	-	-	-	-	-	-	0	0
12:30-12:45	4	2	0	0	0	0	0	6	20	0	1	0	1	0	0	0	2	5	5	0	0	0	0	0	0	5	11	-	-	-	-	-	-	-	0	0
12:45-13:00	5	0	0	1	0	0	0	6	21	1	0	0	0	0	0	0	1	3	0	0	0	0	0	0	0	0	7	-	-	-	-	-	-	-	0	0
13:00-13:15	0	1	0	3	0	0	0	4	18	1	0	0	0	0	0	0	1	2	1	1	2	0	0	0	0	4	9	-	-	-	-	-	-	-	0	0
13:15-13:30	3	0	0	1	0	0	0	4	20	1	0	0	0	0	0	0	1	1	2	0	0	0	0	0	1	2	7	-	-	-	-	-	-	-	0	0
13:30-13:45	4	1	0	2	0	0	0	7	20	0	0	0	0	0	0	0	0	1	1	0	0	0	0	0	0	1	9	-	-	-	-	-	-	-	0	0
13:45-14:00	0	1	1	1	0	0	0	3	15	0	0	0	0	0	0	0	0	1	1	1	0	0	0	0	0	2	10	-	-	-	-	-	-	-	0	0
14:00-14:15	2	3	0	1	0	0	0	6	15	0	0	0	0	0	0	0	0	1	1	1	0	0	0	0	0	2	10	-	-	-	-	-	-	-	0	0
14:15-14:30	3	1	0	0	0	0	0	4	19	1	0	0	0	0	0	0	1	3	1	3	0	0	0	0	0	4	9	-	-	-	-	-	-	-	0	0
14:30-14:45	1	0	0	1	0	0	0	2	20	0	0	0	0	0	0	0	0	3	1	0	0	1	0	0	0	2	9	-	-	-	-	-	-	-	0	0
14:45-15:00	2	0	0	1	0	0	0	3	20	0	0	0	0	0	0	0	0	3	1	0	1	0	0	0	0	2	12	-	-	-	-	-	-	-	0	0
15:00-15:15	5	5	0	0	0	0	0	10	20	1	0	1	0	0	0	0	2	4	1	0	0	0	0	0	0	1	11	-	-	-	-	-	-	-	0	0
15:15-15:30	4	0	0	1	0	0	0	5	13	0	0	0	1	0	0	0	1	4	2	2	0	0	0	0	0	4	15	-	-	-	-	-	-	-	0	0
15:30-15:45	1	0	0	1	0	0	0	2	13	0	0	0	0	0	0	0	0	6	3	1	1	0	0	0	0	5	12	-	-	-	-	-	-	-	0	0
15:45-16:00	2	0	0	1	0	0	0	3	16	0	1	0	0	0	0	0	1	6	1	0	0	0	0	0	0	1	10	-	-	-	-	-	-	-	0	0
16:00-16:15	3	0	0	0	0	0	0	3	19	1	1	0	0	0	0	0	2	6	3	0	1	0	1	0	0	5	10	-	-	-	-	-	-	-	0	0
16:15-16:30	3	0	0	2	0	0	0	5	18	2	1	0	0	0	0	0	3	4	1	0	0	0	0	0	0	1	7	-	-	-	-	-	-	-	0	0
16:30-16:45	4	0	0	1	0	0	0	5	19	0	0	0	0	0	0	0	0	3	2	1	0	0	0	0	0	3	7	-	-	-	-	-	-	-	0	0
16:45-17:00	6	0	0	0	0	0	0	6	19	1	0	0	0	0	0	0	1	3	0	1	0	0	0	0	0	1	7	-	-	-	-	-	-	-	0	0
17:00-17:15	1	1	0	0	0	0	0	2	18	0	0	0	0	0	0	0	0	3	2	0	0	0	0	0	0	2	14	-	-	-	-	-	-	-	0	0
17:15-17:30	3	0	0	2	0	1	0	6	23	2	0	0	0	0	0	0	2	3	1	0	0	0	0	0	0	1	15	-	-	-	-	-	-	-	0	0
17:30-17:45	5	0	0	0	0	0	0	5	23	0	0	0	0	0	0	0	0	1	3	0	0	0	0	0	0	3	16	-	-	-	-	-	-	-	0	0
17:45-18:00	4	1	0	0	0	0	0	5	22	1	0	0	0	0	0	0	1	1	5	2	0	0	0	1	0	8	14	-	-	-	-	-	-	-	0	0
18:00-18:15	5	1	0	0	0	1	0	7	19	0	0	0	0	0	0	0	0	0	3	0	0	0	0	0	0	3	8	-	-	-	-	-	-	-	0	0
18:15-18:30	6	0	0	0	0	0	0	6		0	0	0	0	0	0	0	0		2	0	0	0	0	0	0	2		-	-	-	-	-	-	-	0	
18:30-18:45	3	1	0	0	0	0	0	4		0	0	0	0	0	0	0	0		1	0	0	0	0	0	0	1		-	-	-	-	-	-	-	0	
18:45-19:00	2	0	0	0	0	0	0	2		0	0	0	0	0	0	0	0		2	0	0	0	0	0	0	2		-	-	-	-	-	-	-	0	
12 HR TOTAL	155	47	4	34	0	2	0	242		23	7	1	2	0	0	0	33		79	28	10	4	2	1	1	124		0	0	0	0	0	0	0	0	

SITE: 2 LOCATION: A303 EASTBOUND SLIPS/OVERTON ROAD, MICHELDEVER, 'DOG-LEG' CROSSROAD ROAD: ARM C, OVERTON ROAD SOUTH DAY/DATE: THURSDAY 24th MAY 2012

Video Turning Counts
A303 SLIPS/OVERTON ROAD, MICHELDEVER

TIME 15 min period	MOVEMENT 9, CB From: ARM C, OVERTON ROAD SOUTH Left to: ARM B, A303 EASTBOUND OFF-SLIP									MOVEMENT 10, CA From: ARM C, OVERTON ROAD SOUTH Straight to: ARM A, OVERTON ROAD NORTH									MOVEMENT 11, CD From: ARM C, OVERTON ROAD SOUTH Right to: ARM D, A303 EASTBOUND ON-SLIP									MOVEMENT 12, CC From: ARM C, OVERTON ROAD SOUTH 'U' Turn to: ARM C, OVERTON ROAD SOUTH								
	CAR	LGV	OGV1	OGV2	PSV	MYCYL	BYCL	TOT	HR	CAR	LGV	OGV1	OGV2	PSV	MYCYL	BYCL	TOT	HR	CAR	LGV	OGV1	OGV2	PSV	MYCYL	BYCL	TOT	HR	CAR	LGV	OGV1	OGV2	PSV	MYCYL	BYCL	TOT	HR
07:00-07:15	-	-	-	-	-	-	-	0	0	9	0	0	1	0	0	0	10	69	22	4	1	0	0	0	0	27	161	0	0	0	0	0	0	0	0	1
07:15-07:30	-	-	-	-	-	-	-	0	0	14	3	0	0	1	0	0	18	78	17	5	0	0	0	1	2	23	179	0	1	0	0	0	0	0	1	1
07:30-07:45	-	-	-	-	-	-	-	0	0	17	2	0	0	0	0	0	19	79	51	4	1	0	0	1	0	57	213	0	0	0	0	0	0	0	0	0
07:45-08:00	-	-	-	-	-	-	-	0	0	13	7	0	2	0	0	0	22	80	43	10	0	1	0	0	0	54	204	0	0	0	0	0	0	0	0	0
08:00-08:15	-	-	-	-	-	-	-	0	0	17	0	0	2	0	0	0	19	81	34	10	0	0	0	1	0	45	190	0	0	0	0	0	0	0	0	0
08:15-08:30	-	-	-	-	-	-	-	0	0	15	2	1	1	0	0	0	19	82	51	6	0	0	0	0	0	57	178	0	0	0	0	0	0	0	0	0
08:30-08:45	-	-	-	-	-	-	-	0	0	16	4	0	0	0	0	0	20	82	42	4	2	0	0	0	1	48	145	0	0	0	0	0	0	0	0	0
08:45-09:00	-	-	-	-	-	-	-	0	0	19	2	1	1	0	0	0	23	79	30	3	4	1	0	2	0	40	114	0	0	0	0	0	0	0	0	0
09:00-09:15	-	-	-	-	-	-	-	0	0	15	4	1	0	0	0	0	20	72	25	6	1	0	0	1	0	33	99	0	0	0	0	0	0	0	0	1
09:15-09:30	-	-	-	-	-	-	-	0	0	14	1	4	0	0	0	0	19	60	20	3	0	0	0	1	0	24	78	0	0	0	0	0	0	0	0	2
09:30-09:45	-	-	-	-	-	-	-	0	0	11	2	1	3	0	0	0	17	50	13	3	0	1	0	0	0	17	77	0	0	0	0	0	0	0	0	2
09:45-10:00	-	-	-	-	-	-	-	0	0	9	5	0	1	0	1	1	16	40	20	4	0	1	0	0	0	25	81	1	0	0	0	0	0	0	1	2
10:00-10:15	-	-	-	-	-	-	-	0	0	4	4	0	0	0	0	0	8	42	7	5	0	0	0	0	0	12	76	0	1	0	0	0	0	0	1	1
10:15-10:30	-	-	-	-	-	-	-	0	0	6	3	0	0	0	0	0	9	45	20	3	0	0	0	0	0	23	87	0	0	0	0	0	0	0	0	1
10:30-10:45	-	-	-	-	-	-	-	0	0	5	2	0	0	0	0	0	7	50	16	4	0	0	0	1	0	21	79	0	0	0	0	0	0	0	0	1
10:45-11:00	-	-	-	-	-	-	-	0	0	14	3	1	0	0	0	0	18	54	18	2	0	0	0	0	0	20	82	0	0	0	0	0	0	0	0	1
11:00-11:15	-	-	-	-	-	-	-	0	0	9	1	0	1	0	0	0	11	62	21	2	0	0	0	0	0	23	86	1	0	0	0	0	0	0	1	1
11:15-11:30	-	-	-	-	-	-	-	0	0	10	3	1	0	0	0	0	14	64	13	1	1	0	0	0	0	15	82	0	0	0	0	0	0	0	0	1
11:30-11:45	-	-	-	-	-	-	-	0	0	6	2	0	2	0	1	0	11	61	24	0	0	0	0	0	1	24	81	0	0	0	0	0	0	0	0	1
11:45-12:00	-	-	-	-	-	-	-	0	0	16	6	1	3	0	0	0	26	62	21	3	0	0	0	0	0	24	74	0	0	0	0	0	0	0	0	1
12:00-12:15	-	-	-	-	-	-	-	0	0	10	1	0	2	0	0	0	13	49	16	3	0	0	0	0	0	19	63	1	0	0	0	0	0	0	1	1
12:15-12:30	-	-	-	-	-	-	-	0	0	9	1	0	1	0	0	0	11	43	8	3	2	1	0	0	1	14	66	0	0	0	0	0	0	0	0	0
12:30-12:45	-	-	-	-	-	-	-	0	0	11	0	1	0	0	0	0	12	48	14	2	0	1	0	0	0	17	68	0	0	0	0	0	0	0	0	0
12:45-13:00	-	-	-	-	-	-	-	0	0	9	4	0	0	0	0	0	13	49	8	3	2	0	0	0	0	13	72	0	0	0	0	0	0	0	0	0
13:00-13:15	-	-	-	-	-	-	-	0	0	4	3	0	0	0	0	1	7	46	18	2	0	1	0	1	0	22	77	0	0	0	0	0	0	0	0	0
13:15-13:30	-	-	-	-	-	-	-	0	0	13	0	2	1	0	0	0	16	47	10	5	1	0	0	0	0	16	73	0	0	0	0	0	0	0	0	0
13:30-13:45	-	-	-	-	-	-	-	0	0	7	5	1	0	0	0	0	13	44	17	4	0	0	0	0	0	21	67	0	0	0	0	0	0	0	0	0
13:45-14:00	-	-	-	-	-	-	-	0	0	9	1	0	0	0	0	0	10	39	12	4	1	1	0	0	0	18	71	0	0	0	0	0	0	0	0	0
14:00-14:15	-	-	-	-	-	-	-	0	0	7	0	1	0	0	0	0	8	46	14	4	0	0	0	0	0	18	74	0	0	0	0	0	0	0	0	0
14:15-14:30	-	-	-	-	-	-	-	0	0	10	1	0	1	0	1	0	13	49	8	2	0	0	0	0	0	10	75	0	0	0	0	0	0	0	0	2
14:30-14:45	-	-	-	-	-	-	-	0	0	5	1	0	2	0	0	0	8	48	18	6	0	0	0	1	0	25	85	0	0	0	0	0	0	0	0	2
14:45-15:00	-	-	-	-	-	-	-	0	0	13	3	1	0	0	0	0	17	62	14	4	0	2	0	1	0	21	80	0	0	0	0	0	0	0	0	3
15:00-15:15	-	-	-	-	-	-	-	0	0	9	1	0	1	0	0	0	11	60	18	1	0	0	0	0	0	19	92	2	0	0	0	0	0	0	2	3
15:15-15:30	-	-	-	-	-	-	-	0	0	8	2	1	1	0	0	0	12	64	19	1	0	0	0	0	1	20	95	0	0	0	0	0	0	0	0	1
15:30-15:45	-	-	-	-	-	-	-	0	0	16	2	2	2	0	0	0	22	67	17	2	0	0	0	1	0	20	102	1	0	0	0	0	0	0	1	1
15:45-16:00	-	-	-	-	-	-	-	0	0	11	3	0	1	0	0	0	15	65	25	7	0	1	0	0	0	33	106	0	0	0	0	0	0	0	0	0
16:00-16:15	-	-	-	-	-	-	-	0	0	13	1	0	1	0	0	0	15	67	13	7	1	1	0	0	0	22	104	0	0	0	0	0	0	0	0	0
16:15-16:30	-	-	-	-	-	-	-	0	0	11	4	0	0	0	0	0	15	65	23	4	0	0	0	0	0	27	116	0	0	0	0	0	0	0	0	0
16:30-16:45	-	-	-	-	-	-	-	0	0	17	3	0	0	0	0	0	20	75	20	2	1	1	0	0	0	24	112	0	0	0	0	0	0	0	0	0
16:45-17:00	-	-	-	-	-	-	-	0	0	13	3	0	0	0	1	0	17	75	28	2	0	1	0	0	0	31	120	0	0	0	0	0	0	0	0	0
17:00-17:15	-	-	-	-	-	-	-	0	0	8	5	0	0	0	0	0	13	82	28	5	0	0	0	1	0	34	107	0	0	0	0	0	0	0	0	0
17:15-17:30	-	-	-	-	-	-	-	0	0	22	3	0	0	0	0	0	25	88	19	3	0	0	0	1	0	23	98	0	0	0	0	0	0	0	0	0
17:30-17:45	-	-	-	-	-	-	-	0	0	19	1	0	0	0	0	0	20	76	28	3	1	0	0	0	0	32	99	0	0	0	0	0	0	0	0	0
17:45-18:00	-	-	-	-	-	-	-	0	0	20	3	0	0	0	1	1	24	77	15	2	1	0	0	0	0	18	86	0	0	0	0	0	0	0	0	0
18:00-18:15	-	-	-	-	-	-	-	0	0	18	1	0	0	0	0	0	19	61	24	1	0	0	0	0	0	25	88	0	0	0	0	0	0	0	0	0
18:15-18:30	-	-	-	-	-	-	-	0		12	1	0	0	0	0	0	13		20	3	0	1	0	0	0	24		0	0	0	0	0	0	0	0	
18:30-18:45	-	-	-	-	-	-	-	0		18	1	0	1	0	1	0	21		19	0	0	0	0	0	0	19		0	0	0	0	0	0	0	0	
18:45-19:00	-	-	-	-	-	-	-	0		7	1	0	0	0	0	0	8		20	0	0	0	0	0	0	20		0	0	0	0	0	0	0	0	
12 HR TOTAL	0	0	0	0	0	0	0	0		568	111	20	31	1	6	3	737		1001	167	20	15	0	14	6	1217		6	2	0	0	0	0	0	8	

SITE: 2 LOCATION: A303 EASTBOUND SLIPS/OVERTON ROAD, MICHELDEVER, 'DOG-LEG' CROSSROAD ROAD: ARM D, A303 EASTBOUND ON-SLIP AND POPHAM AIRFIELD DAY/DATE: THURSDAY 24th MAY 2012

Video Turning Counts
A303 SLIPS/OVERTON ROAD, MICHELDEVER

TIME	MOVEMENT 13, DC									MOVEMENT 14, DB									MOVEMENT 15, DA									MOVEMENT 16, DD								
	From:	ARM D, A303 EASTBOUND ON-SLIP								From:	ARM D, A303 EASTBOUND ON-SLIP								From:	ARM D, A303 EASTBOUND ON-SLIP								'U' Turn to:	ARM D, A303 EASTBOUND ON-SLIP							
15 min period	Left to:	ARM C, OVERTON ROAD SOUTH								Straight to:	ARM B, A303 EASTBOUND OFF-SLIP								Right to:	ARM A, OVERTON ROAD NORTH																
	CAR	LGV	OGV1	OGV2	PSV	MYCYL	BYCL	TOT	HR	CAR	LGV	OGV1	OGV2	PSV	MYCYL	BYCL	TOT	HR	CAR	LGV	OGV1	OGV2	PSV	MYCYL	BYCL	TOT	HR	CAR	LGV	OGV1	OGV2	PSV	MYCYL	BYCL	TOT	HR
07:00-07:15	1	0	0	0	0	0	0	1	10	-	-	-	-	-	-	-	0	0	0	0	0	0	0	0	2	0	2	-	-	-	-	-	-	-	0	0
07:15-07:30	0	0	0	1	0	0	0	1	13	-	-	-	-	-	-	-	0	0	1	0	0	0	0	0	0	1	2	-	-	-	-	-	-	-	0	0
07:30-07:45	3	0	0	1	0	0	0	4	14	-	-	-	-	-	-	-	0	0	0	0	0	1	0	0	0	1	1	-	-	-	-	-	-	-	0	0
07:45-08:00	4	0	0	0	0	0	0	4	11	-	-	-	-	-	-	-	0	0	0	0	0	0	0	0	0	0	0	-	-	-	-	-	-	-	0	0
08:00-08:15	3	1	0	0	0	0	0	4	8	-	-	-	-	-	-	-	0	0	0	0	0	0	0	0	0	0	0	-	-	-	-	-	-	-	0	0
08:15-08:30	2	0	0	0	0	0	0	2	6	-	-	-	-	-	-	-	0	0	0	0	0	0	0	0	0	0	1	-	-	-	-	-	-	-	0	0
08:30-08:45	0	1	0	0	0	0	0	1	8	-	-	-	-	-	-	-	0	0	0	0	0	0	0	0	0	0	2	-	-	-	-	-	-	-	0	0
08:45-09:00	1	0	0	0	0	0	0	1	7	-	-	-	-	-	-	-	0	0	0	0	0	0	0	0	0	0	2	-	-	-	-	-	-	-	0	0
09:00-09:15	1	1	0	0	0	0	0	2	6	-	-	-	-	-	-	-	0	0	0	0	0	1	0	0	0	1	2	-	-	-	-	-	-	-	0	0
09:15-09:30	3	0	0	1	0	0	0	4	8	-	-	-	-	-	-	-	0	0	1	0	0	0	0	0	0	1	1	-	-	-	-	-	-	-	0	0
09:30-09:45	0	0	0	0	0	0	0	0	5	-	-	-	-	-	-	-	0	0	0	0	0	0	0	0	0	0	0	-	-	-	-	-	-	-	0	0
09:45-10:00	0	0	0	0	0	0	0	0	7	-	-	-	-	-	-	-	0	0	0	0	0	0	0	0	0	0	2	-	-	-	-	-	-	-	0	0
10:00-10:15	2	2	0	0	0	0	0	4	7	-	-	-	-	-	-	-	0	0	0	0	0	0	0	0	0	0	2	-	-	-	-	-	-	-	0	0
10:15-10:30	0	1	0	0	0	0	0	1	5	-	-	-	-	-	-	-	0	0	0	0	0	0	0	0	0	0	2	-	-	-	-	-	-	-	0	0
10:30-10:45	2	0	0	0	0	0	0	2	5	-	-	-	-	-	-	-	0	0	2	0	0	0	0	0	0	2	2	-	-	-	-	-	-	-	0	0
10:45-11:00	0	0	0	0	0	0	0	0	5	-	-	-	-	-	-	-	0	0	0	0	0	0	0	0	0	0	0	-	-	-	-	-	-	-	0	0
11:00-11:15	1	1	0	0	0	0	0	2	7	-	-	-	-	-	-	-	0	0	0	0	0	0	0	0	0	0	0	-	-	-	-	-	-	-	0	0
11:15-11:30	0	1	0	0	0	0	0	1	6	-	-	-	-	-	-	-	0	0	0	0	0	0	0	0	0	0	1	-	-	-	-	-	-	-	0	0
11:30-11:45	2	0	0	0	0	0	0	2	5	-	-	-	-	-	-	-	0	0	0	0	0	0	0	0	0	0	1	-	-	-	-	-	-	-	0	0
11:45-12:00	2	0	0	0	0	0	0	2	5	-	-	-	-	-	-	-	0	0	0	0	0	0	0	0	0	0	2	-	-	-	-	-	-	-	0	0
12:00-12:15	0	1	0	0	0	0	0	1	4	-	-	-	-	-	-	-	0	0	1	0	0	0	0	0	0	1	2	-	-	-	-	-	-	-	0	0
12:15-12:30	0	0	0	0	0	0	0	0	6	-	-	-	-	-	-	-	0	0	0	0	0	0	0	0	0	0	3	-	-	-	-	-	-	-	0	0
12:30-12:45	1	0	0	1	0	0	0	2	7	-	-	-	-	-	-	-	0	0	0	0	0	1	0	0	0	1	3	-	-	-	-	-	-	-	0	0
12:45-13:00	1	0	0	0	0	0	0	1	9	-	-	-	-	-	-	-	0	0	0	0	0	0	0	0	0	0	3	-	-	-	-	-	-	-	0	0
13:00-13:15	3	0	0	0	0	0	0	3	10	-	-	-	-	-	-	-	0	0	1	0	0	1	0	0	0	2	5	-	-	-	-	-	-	-	0	0
13:15-13:30	1	0	0	0	0	0	0	1	9	-	-	-	-	-	-	-	0	0	0	0	0	0	0	0	0	0	4	-	-	-	-	-	-	-	0	0
13:30-13:45	4	0	0	0	0	0	0	4	14	-	-	-	-	-	-	-	0	0	1	0	0	0	0	0	0	1	4	-	-	-	-	-	-	-	0	0
13:45-14:00	1	1	0	0	0	0	0	2	12	-	-	-	-	-	-	-	0	0	2	0	0	0	0	0	0	2	3	-	-	-	-	-	-	-	0	0
14:00-14:15	2	0	0	0	0	0	0	2	13	-	-	-	-	-	-	-	0	0	1	0	0	0	0	0	0	1	1	-	-	-	-	-	-	-	0	0
14:15-14:30	3	2	0	1	0	0	0	6	11	-	-	-	-	-	-	-	0	0	0	0	0	0	0	0	0	0	0	-	-	-	-	-	-	-	0	0
14:30-14:45	2	0	0	0	0	0	0	2	6	-	-	-	-	-	-	-	0	0	0	0	0	0	0	0	0	0	0	-	-	-	-	-	-	-	0	0
14:45-15:00	2	0	0	0	0	1	0	3	7	-	-	-	-	-	-	-	0	0	0	0	0	0	0	0	0	0	1	-	-	-	-	-	-	-	0	0
15:00-15:15	0	0	0	0	0	0	0	0	7	-	-	-	-	-	-	-	0	0	0	0	0	0	0	0	0	0	1	-	-	-	-	-	-	-	0	0
15:15-15:30	1	0	0	0	0	0	0	1	10	-	-	-	-	-	-	-	0	0	0	0	0	0	0	0	0	0	2	-	-	-	-	-	-	-	0	0
15:30-15:45	2	1	0	0	0	0	0	3	11	-	-	-	-	-	-	-	0	0	0	0	0	0	0	1	0	1	3	-	-	-	-	-	-	-	0	0
15:45-16:00	3	0	0	0	0	0	0	3	12	-	-	-	-	-	-	-	0	0	0	0	0	0	0	0	0	0	2	-	-	-	-	-	-	-	0	0
16:00-16:15	3	0	0	0	0	0	0	3	14	-	-	-	-	-	-	-	0	0	0	0	0	0	0	1	0	1	3	-	-	-	-	-	-	-	0	0
16:15-16:30	2	0	0	0	0	0	0	2	15	-	-	-	-	-	-	-	0	0	1	0	0	0	0	0	0	1	3	-	-	-	-	-	-	-	0	0
16:30-16:45	3	0	0	0	0	1	0	4	17	-	-	-	-	-	-	-	0	0	0	0	0	0	0	0	0	0	4	-	-	-	-	-	-	-	0	0
16:45-17:00	2	2	0	0	0	1	0	5	16	-	-	-	-	-	-	-	0	0	0	1	0	0	0	0	0	1	4	-	-	-	-	-	-	-	0	0
17:00-17:15	3	1	0	0	0	0	0	4	14	-	-	-	-	-	-	-	0	0	1	0	0	0	0	0	0	1	3	-	-	-	-	-	-	-	0	0
17:15-17:30	3	1	0	0	0	0	0	4	13	-	-	-	-	-	-	-	0	0	0	2	0	0	0	0	0	2	2	-	-	-	-	-	-	-	0	0
17:30-17:45	2	0	0	1	0	0	2	3	11	-	-	-	-	-	-	-	0	0	0	0	0	0	0	0	0	0	0	-	-	-	-	-	-	-	0	0
17:45-18:00	2	0	1	0	0	0	1	3	11	-	-	-	-	-	-	-	0	0	0	0	0	0	0	0	0	0	0	-	-	-	-	-	-	-	0	0
18:00-18:15	3	0	0	0	0	0	0	3	8	-	-	-	-	-	-	-	0	0	0	0	0	0	0	0	0	0	0	-	-	-	-	-	-	-	0	0
18:15-18:30	1	1	0	0	0	0	0	2		-	-	-	-	-	-	-	0		0	0	0	0	0	0	0	0		-	-	-	-	-	-	-	0	
18:30-18:45	3	0	0	0	0	0	0	3		-	-	-	-	-	-	-	0		0	0	0	0	0	0	0	0		-	-	-	-	-	-	-	0	
18:45-19:00	0	0	0	0	0	0	0	0		-	-	-	-	-	-	-	0		0	0	0	0	0	0	0	0		-	-	-	-	-	-	-	0	
12 HR TOTAL	80	18	1	6	0	3	3	108		0	0	0	0	0	0	0	0		12	3	0	4	0	2	2	21		0	0	0	0	0	0	0	0	

SITE: 2 **LOCATION: A303 EASTBOUND SLIPS/OVERTON ROAD, MICHELDEVER, 'DOG-LEG' CROSSROAD**

DAY/DATE: THURSDAY 24th MAY 2012 **12 HOUR SUMMARY**

TIME	MOVEMENT: ALL IN TO JUNCTION						MOVEMENT: ALL OUT OF JUNCTION					
	A	B	C	D	TOT	HR	A	B	C	D	TOT	HR
07:00-07:15	12	1	37	1	51	383	11	0	9	31	51	383
07:15-07:30	30	7	42	2	81	438	25	0	23	33	81	438
07:30-07:45	27	14	76	5	122	476	30	0	21	71	122	476
07:45-08:00	30	19	76	4	129	476	29	0	39	61	129	476
08:00-08:15	29	9	64	4	106	453	25	0	25	56	106	453
08:15-08:30	28	13	76	2	119	431	27	0	24	68	119	431
08:30-08:45	36	17	68	1	122	385	31	0	29	62	122	385
08:45-09:00	29	13	63	1	106	327	32	0	24	50	106	327
09:00-09:15	20	8	53	3	84	292	26	0	18	40	84	292
09:15-09:30	12	13	43	5	73	259	28	0	16	29	73	259
09:30-09:45	20	10	34	0	64	239	22	0	18	24	64	239
09:45-10:00	19	10	42	0	71	227	24	0	16	31	71	227
10:00-10:15	21	5	21	4	51	219	10	0	24	17	51	219
10:15-10:30	15	5	32	1	53	222	12	0	14	27	53	222
10:30-10:45	15	5	28	4	52	221	13	0	14	25	52	221
10:45-11:00	13	12	38	0	63	235	23	0	14	26	63	235
11:00-11:15	14	3	35	2	54	245	14	0	15	25	54	245
11:15-11:30	19	3	29	1	52	253	17	0	15	20	52	253
11:30-11:45	24	5	35	2	66	251	13	0	17	36	66	251
11:45-12:00	16	5	50	2	73	251	29	0	14	30	73	251
12:00-12:15	19	8	33	2	62	233	20	0	17	25	62	233
12:15-12:30	18	7	25	0	50	227	17	0	14	19	50	227
12:30-12:45	21	13	29	3	66	237	19	0	17	30	66	237
12:45-13:00	21	7	26	1	55	238	19	0	14	22	55	238
13:00-13:15	13	9	29	5	56	234	13	0	15	28	56	234
13:15-13:30	20	7	32	1	60	245	20	0	16	24	60	245
13:30-13:45	20	8	34	5	67	249	21	0	20	26	67	249
13:45-14:00	14	5	28	4	51	239	15	0	14	22	51	239
14:00-14:15	30	8	26	3	67	246	15	0	30	22	67	246
14:15-14:30	26	9	23	6	64	244	17	0	28	19	64	244
14:30-14:45	18	4	33	2	57	246	10	0	15	32	57	246
14:45-15:00	12	5	38	3	58	269	20	0	13	25	58	269
15:00-15:15	20	13	32	0	65	295	21	0	17	27	65	295
15:15-15:30	23	10	32	1	66	302	17	0	19	30	66	302
15:30-15:45	26	7	43	4	80	316	25	0	24	31	80	316
15:45-16:00	28	5	48	3	84	319	18	0	24	42	84	319
16:00-16:15	21	10	37	4	72	321	19	0	19	34	72	321
16:15-16:30	26	9	42	3	80	346	21	0	19	40	80	346
16:30-16:45	27	8	44	4	83	377	25	0	20	38	83	377
16:45-17:00	24	8	48	6	86	391	24	0	23	39	86	391
17:00-17:15	41	4	47	5	97	388	16	0	35	46	97	388
17:15-17:30	48	9	48	6	111	371	33	0	43	35	111	371
17:30-17:45	34	8	52	3	97	324	25	0	31	41	97	324
17:45-18:00	24	14	42	3	83	292	29	0	26	28	83	292
18:00-18:15	23	10	44	3	80	253	26	0	20	34	80	253
18:15-18:30	17	8	37	2	64		19	0	19	26	64	
18:30-18:45	17	5	40	3	65		25	0	15	25	65	
18:45-19:00	12	4	28	0	44		10	0	11	23	44	
12 HR TOTAL	1072	399	1962	129	3562		1000	0	967	1595	3562	

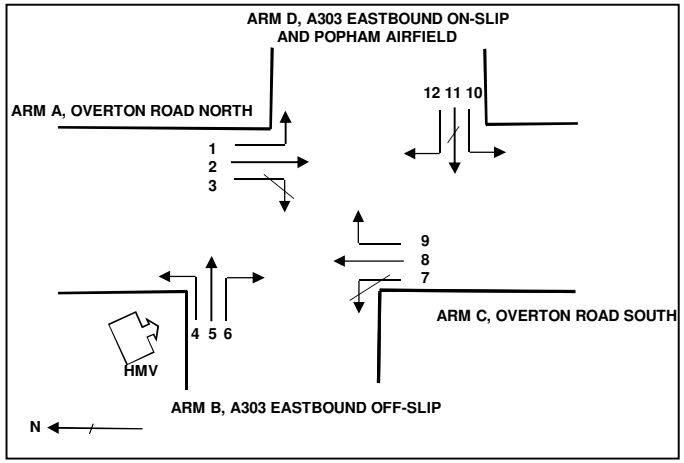

Video Turning Counts
A303 SLIPS/OVERTON ROAD, MICHELDEVER

SITES: 3 and 4 **DAY/DATE: THURSDAY 24th MAY 2012**

ROADS: OVERTON ROAD TO A303 ON-SLIPS, MICHELDEVER

TIME 15 min period	SITE 3 EASTBOUND ON-SLIP									SITE 4 WESTBOUND ON-SLIP								
	CAR	LGV	OGV1	OGV2	PSV	MYCYL	BYCL	TOT	HR	CAR	LGV	OGV1	OGV2	PSV	MYCYL	BYCL	TOT	HR
07:00-07:15	26	5	0	0	0	1	0	32	187	0	0	0	2	0	0	0	2	36
07:15-07:30	27	4	0	0	1	0	0	32	208	13	0	0	1	0	0	1	14	40
07:30-07:45	56	4	1	0	0	1	0	62	238	2	1	0	1	0	0	0	4	39
07:45-08:00	51	9	0	1	0	0	0	61	236	13	2	0	0	0	1	0	16	46
08:00-08:15	40	12	0	0	0	1	0	53	223	3	0	1	1	0	1	0	6	42
08:15-08:30	55	7	0	0	0	0	0	62	204	6	3	1	2	0	1	0	13	43
08:30-08:45	53	4	1	2	0	0	0	60	171	9	1	1	0	0	0	0	11	35
08:45-09:00	35	5	3	4	0	1	0	48	127	8	2	0	1	0	1	0	12	30
09:00-09:15	26	4	1	1	0	2	0	34	105	4	0	1	1	1	0	0	7	26
09:15-09:30	23	5	0	0	0	1	0	29	88	0	2	1	1	1	0	0	5	28
09:30-09:45	14	1	1	0	0	0	0	16	82	4	0	2	0	0	0	0	6	32
09:45-10:00	19	5	0	2	0	0	0	26	91	1	4	1	2	0	0	0	8	31
10:00-10:15	11	5	0	1	0	0	0	17	88	7	1	0	1	0	0	0	9	26
10:15-10:30	19	4	0	0	0	0	0	23	91	3	2	1	3	0	0	0	9	25
10:30-10:45	17	6	1	0	0	1	0	25	84	4	1	0	0	0	0	0	5	23
10:45-11:00	18	3	1	1	0	0	0	23	88	2	1	0	0	0	0	0	3	24
11:00-11:15	18	2	0	0	0	0	0	20	93	2	6	0	0	0	0	0	8	27
11:15-11:30	15	0	1	0	0	0	0	16	94	6	1	0	0	0	0	0	7	31
11:30-11:45	24	4	1	0	0	0	0	29	93	4	1	0	0	1	0	0	6	29
11:45-12:00	22	5	0	1	0	0	0	28	87	3	1	1	1	0	0	0	6	28
12:00-12:15	17	4	0	0	0	0	0	21	84	7	2	2	1	0	0	0	12	27
12:15-12:30	9	4	2	0	0	0	0	15	90	1	1	1	2	0	0	0	5	18
12:30-12:45	17	4	0	2	0	0	0	23	94	2	2	0	1	0	0	0	5	21
12:45-13:00	18	5	2	0	0	0	0	25	96	4	0	0	1	0	0	0	5	25
13:00-13:15	24	2	0	0	0	1	0	27	95	3	0	0	0	0	0	0	3	30
13:15-13:30	15	1	0	3	0	0	0	19	88	4	2	0	1	0	1	0	8	41
13:30-13:45	17	6	2	0	0	0	0	25	87	8	0	0	1	0	0	0	9	42
13:45-14:00	17	4	1	2	0	0	0	24	90	9	1	0	0	0	0	0	10	40
14:00-14:15	16	4	0	0	0	0	0	20	92	11	1	1	0	1	0	0	14	37
14:15-14:30	12	4	0	1	0	1	0	18	98	4	3	1	1	0	0	0	9	28
14:30-14:45	21	5	0	1	0	1	0	28	108	4	3	0	0	0	0	0	7	26
14:45-15:00	18	5	1	2	0	0	0	26	109	5	1	0	1	0	0	0	7	31
15:00-15:15	23	2	0	1	0	0	0	26	118	4	0	0	1	0	0	0	5	31
15:15-15:30	24	3	1	0	0	0	0	28	126	4	2	0	1	0	0	0	7	36
15:30-15:45	24	4	0	0	0	1	0	29	131	10	2	0	0	0	0	0	12	37
15:45-16:00	27	8	0	0	0	0	0	35	137	5	2	0	0	0	0	0	7	39
16:00-16:15	25	6	2	1	0	0	0	34	135	8	1	1	0	0	0	0	10	40
16:15-16:30	28	5	0	0	0	0	0	33	148	6	1	0	1	0	0	0	8	48
16:30-16:45	28	4	1	1	0	1	0	35	150	12	1	0	1	0	0	0	14	57
16:45-17:00	30	1	0	2	0	0	0	33	151	6	1	0	1	0	0	1	8	56
17:00-17:15	38	8	0	1	0	0	0	47	143	17	1	0	0	0	0	0	18	56
17:15-17:30	30	4	0	0	0	1	0	35	132	16	1	0	0	0	0	0	17	46
17:30-17:45	32	3	0	1	0	0	0	36	124	12	0	0	1	0	0	0	13	40
17:45-18:00	22	2	1	0	0	0	0	25	115	7	1	0	0	0	0	0	8	30
18:00-18:15	33	3	0	0	0	0	0	36	112	7	1	0	0	0	0	0	8	25
18:15-18:30	25	2	0	0	0	0	0	27		10	0	1	0	0	0	0	11	
18:30-18:45	24	1	0	0	0	2	0	27		2	1	0	0	0	0	0	3	
18:45-19:00	22	0	0	0	0	0	0	22		2	0	0	1	0	0	0	3	
12 HR TOTAL	**1205**	**198**	**24**	**31**	**1**	**16**	**0**	**1475**		**284**	**60**	**17**	**33**	**4**	**5**	**2**	**403**	