EPR PERMIT APPLICATION

Clean Power (UK) Limited
Micheldever Energy Recovery Centre, Hampshire

Prepared by:
Sol Environment Ltd

Date:
December 2013

Project or Issue Number:
SOL0613CPP03_MD

Sol Environment Ltd | Malvern | Bristol | Edinburgh
enquiries@sol-environment.co.uk | t. +44(0)1684 572727 (Switchboard) | +44(0)117 9372811 (Bristol)

This page is intentionally left blank

Contract/Proposal No:	SOL0613CPP03_MD
Issue:	1
Author:	Steve Butler
(signature):	
Date:	December 2013

This report has been prepared by Sol Environment with all reasonable skill, care and diligence, and taking account of the Services and the Terms agreed between Sol Environment and the Client. This report is confidential to the client, and Sol Environment accepts no responsibility whatsoever to third parties to whom this report, or any part thereof, is made known, unless formally agreed by Sol Environment beforehand. Any such party relies upon the report at their own risk.

Sol Environment disclaims any responsibility to the Client and others in respect of any matters outside the agreed scope of the Services.

VERSION CONTROL RECORD				
Issue	Description of Status	Date	Reviewer Initials	Authors Initials
1	First Submission to Environment Agency	December 2013	HW	SB

This page is intentionally left blank

CONTENTS

NON TECHNICAL SUMMARY 7

1 INTRODUCTION 11

2 PLANNING STATUS 15

3 PROPOSED NEW PERMIT 16
3.1 Type of Permit 16
3.2 Details of the Installation 18
3.3 Description of the process 19

4 EMISSIONS & THEIR ABATEMENT 64
4.1 Emissions to air 64
4.1.1 Point-source Emissions to Air 64
4.2 Emissions to water 67
4.3 Emissions to Sewer 68
4.4 Emissions to Land 68
4.5 Odour 68
4.6 Noise Impacts 69
4.6.1 Potential Noise Sources 69
4.6.2 Noise Abatement Measures 69
4.6.3 Potential Impacts 72
4.7 Fugitive emissions 73
4.8 Waste Generation and Management 74
4.8.1 Types and Amounts of Waste 74
4.8.2 Waste Storage 75
4.8.3 Resource Efficiency and Climate Change 75

5 ENVIRONMENTAL MONITORING 76
5.1 Emissions to Air 76
5.2 Emissions to Water 77
5.3 Emissions to Sewer 77
5.4 Emissions to Land 77
5.5 Monitoring frequency 77

6 BAT APPRAISAL 79

7 IMPACT TO THE ENVIRONMENT 96
7.1 Impacts to Air 96
7.2 Impacts to Land 99
7.3 Impacts to Controlled Waters 99
7.4 Impacts to sewer 100

Index of Tables

Table Ref	Table Title	Page
Table 2.1	Planning History	15
Table 3.1	IED Activities	16
Table 3.2	Summary Process Description	19
Table 3.3	Proposed Feedstock EWC codes and types	23
Table 3.4	Raw Materials Summary	26
Table 3.5	Typical Fibre Chemical Analysis	39
Table 3.6	Metals content of fibre	39
Table 3.7	Bio-fibre ash analysis	39
Table 3.8	Biofibre Contaminant Fate	41
Table 3.9	Syngas Composition Post Clean Up	47
Table 3.10	Primary Digestion Tanks Specification	54
Table 3.11	Secondary Digester Tanks Specification	54
Table 3.12	Sanitisation Tanks Specification	55
Table 3.13	Working Plan	61
Table 4.1	Emissions from the site	64
Table 4.2	Stack attributes	65
Table 4.3	Emissions to Controlled Water W1	67
Table 4.4	Odour Management Summary	68
Table 4.5	Identified Noise Sources and Abatement	71
Table 4.6	Waste Summary	74
Table 5.1	Monitoring Frequency	77
Table 6.1	Technology Comparison Summary	81
Table 6.2	Chapter 4 IED / WID Compliance Statement	87
Table 7.1	Human Health Receptors	97
Table 7.2	Location of Sensitive Habitat receptors	99

Index of Figures

Figure Ref	Figure Title	Page
Figure 1.1	Site and Installation Boundary	13
Figure 1.2	Figure showing proposed site layout	14
Figure 3.1	Simplified Process Schematic	21
Figure 3.2	Simplified Process Schematic	22
Figure 3.3	Reception Building Layout	29
Figure 3.4	Autoclave Process Flowchart	31
Figure 3.5	Autoclave Internals Before Steam Sterilisation	32
Figure 3.6	Autoclave Internals After Steam Sterilisation	32
Figure 3.7	Dried Biofibe prior to compaction	33
Figure 3.8	Compacted Fibre prior to introduction in to pyrolyser	37
Figure 3.9	Pyrolysation and Generation Layout	38
Figure 3.10	Pyrolysis Plant	43
Figure 3.11	Pyrolyser	44
Figure 3.12	Sorbent Injection Plant	51
Figure 3.12	Simplified Process Description Anaerobic Digestion	53
Figure 3.13	Anaerobic Digestion Tanks	55

Glossary of Terms

Term	Definition
Advanced Conversion Technology	A suite of technologies which have the capacity to convert solid waste materials into gas for the generation of renewable energy through Combine Heat and Power Plant (CHP). Technologies include Pyrolysis, Gasification and Anaerobic Digestion. The technologies used to utilise renewable fuels or waste include: - Direct firing open cycle steam turbine systems, - Integrated gasification combined cycle turbine systems, - Integrated pyrolysis combined cycle turbine systems, - Anaerobically generated biogas fuel in reciprocating engine or gas turbine systems.
Air quality objective	Policy target generally expressed as a maximum ambient concentration to be achieved, either without exception or with a permitted number of exceedences within a specific timescale (see also air quality standard).
Air quality standard	The concentrations of pollutants in the atmosphere which can broadly be taken to achieve a certain level of environmental quality. The standards are based on the assessment of the effects of each pollutant on human health including the effects on sensitive sub groups (see also air quality objective).
Ambient air	Outdoor air in the troposphere, excluding workplace air.
Annual mean	The average (mean) of the concentrations measured for each pollutant for one year. Usually this is for a calendar year, but some species are reported for the period April to March, known as a pollution year. This period avoids splitting winter season between 2 years, which is useful for pollutants that have higher concentrations during the winter months.
AQMA	Air Quality Management Area.
BTEX	BTEX is an acronym that stands for benzene, toluene, ethylbenzene, and xylenes.[1] These compounds are some of the volatile organic compounds (VOCs) found in petroleum derivatives such as petrol (gasoline). Toluene, ethylbenzene, and xylenes have harmful effects on the central nervous system.
By-product	A by-product is a secondary product derived from a manufacturing process or chemical reaction. It is not the primary product or service being produced.
CHP	Combined Heat and Power Plant (CHP) integrates the production of usable heat and power (electricity), in one single, highly efficient process.
CHPQA	The CHPQA (Quality Assurance for Combined Heat and Power) programme is carried out on behalf of the Department of Energy and Climate Change, in consultation with the Scottish Executive, the National Assembly for Wales, and the Northern Ireland Department of Enterprise, Trade and Investment.
DEFRA	Department for Environment, Food and Rural Affairs.
Dioxin	Dioxins and dioxin-like compounds, a diverse range of chemical compounds which are known to exhibit “dioxin-like” toxicity.

	In chemistry, a dioxin is a heterocyclic 6-membered ring, where 2 carbon atoms have been replaced by oxygen atoms.
Eutrophication	Eutrophication or more precisely hypertrophication, is the ecosystem response to the addition of artificial or natural substances, such as nitrates and phosphates, through fertilizers or sewage, to an aquatic system
Exceedence	A period of time where the concentrations of a pollutant is greater than, or equal to, the appropriate air quality standard.
Fugitive emissions	Emissions arising from the passage of vehicles that do not arise from the exhaust system.
Gasification	Gasification is a process that converts organic or fossil based carbonaceous materials into carbon monoxide, hydrogen and carbon dioxide. This is achieved by reacting the material at high temperatures (>700 °C), without combustion, with a controlled amount of oxygen and/or steam.
HVAC	HVAC (heating, ventilation, and air conditioning) is the technology of indoor and vehicular environmental comfort.
ISO14001	ISO 14000 is a family of standards related to environmental management that exists to help organizations (a) minimize how their operations (processes etc.) negatively affect the environment (i.e. cause adverse changes to air, water, or land); (b) comply with applicable laws, regulations, and other environmentally oriented requirements, and (c) continually improve in the above.
LAQM	Local Air Quality Management.
NO	Nitrogen monoxide, a.k.a. nitric oxide.
NO2	Nitrogen dioxide.
NOx	Nitrogen oxides.
O3	Ozone.
PAH	Polycyclic aromatic hydrocarbons (PAHs), also known as poly-aromatic hydrocarbons or polynuclear aromatic hydrocarbons, are potent atmospheric pollutants that consist of fused aromatic rings and do not contain heteroatoms or carry substituents. Naphthalene is the simplest example of a PAH. PAHs occur in oil, coal, and tar deposits, and are produced as byproducts of fuel burning (whether fossil fuel or biomass). As a pollutant, they are of concern because some compounds have been identified as carcinogenic, mutagenic, and teratogenic.
Percentile	The percentage of results below a given value.
PLC	A Programmable Logic Controller, PLC or Programmable Controller is a digital computer used for automation of electromechanical processes, such as control of machinery.
PM10	Particulate matter with an aerodynamic diameter of less than 10 micrometres.
PPB parts per billion	The concentration of a pollutant in the air in terms of volume ratio. A concentration of 1 ppb means that for every billion (109) units of air, there is one unit of pollutant present.
PPM parts per million	The concentration of a pollutant in the air in terms of volume ratio. A concentration of 1 ppm means that for every billion (106) units of air, there is one unit of pollutant

	present.
Pyrolysis	Pyrolysis is a thermochemical decomposition of organic material at elevated temperatures in the absence of oxygen.
Ratification (Monitoring)	Involves a critical review of all information relating to a data set, in order to amend or reject the data. When the data have been ratified they represent the final data to be used (see also validation).
RDF	Refuse-derived fuel (RDF) or solid recovered fuel/ specified recovered fuel (SRF) is a fuel produced by shredding and dehydrating solid waste (MSW) with a Waste converter technology. RDF consists largely of combustible components of municipal waste such as plastics and biodegradable waste.
Renewable Energy	Renewable energy is generally defined as energy that comes from resources which are continually replenished on a human timescale such as sunlight, wind, rain, tides, waves and geothermal heat. Renewable energy is also defined under the Renewable Energy Directive as comprising energy from the biomass fraction of waste.
ROC	Renewable Obligation Certificates
SCADA	SCADA (supervisory control and data acquisition) is a type of industrial control system (ICS). Industrial control systems are computer controlled systems that monitor and control industrial processes.
SCR	Selective catalytic reduction (SCR) is a means of converting nitrogen oxides, also referred to as NOx with the aid of a catalyst into diatomic nitrogen, N2, and water, H2O. A gaseous reductant, typically anhydrous ammonia, aqueous ammonia or urea, is added to a stream of flue or exhaust gas and is adsorbed onto a catalyst.
SRF	SRF can be distinguished from RDF in the fact that it is produced to reach a standard such as CEN/343 ANAS.
Synthesis Gas (Syn-gas)	Syngas, or synthesis gas, is a fuel gas mixture consisting primarily of hydrogen, carbon monoxide, and very often some carbon dioxide. The name comes from its use as intermediates in creating synthetic natural gas (SNG) and for producing ammonia or methanol.
µg/m3 micrograms per cubic metre	A measure of concentration in terms of mass per unit volume. A concentration of 1ug/m3 means that one cubic metre of air contains one microgram (millionth of a gram) of pollutant.
UKAS	United Kingdom Accreditation Service.
Uncertainty	A measure, associated with the result of a measurement, which characterizes the range of values within which the true value is expected to lie. Uncertainty is usually expressed as the range within which the true value is expected to lie with a 95% probability, where standard statistical and other procedures have been used to evaluate this figure. Uncertainty is more clearly defined than the closely related parameter 'accuracy', and has replaced it on recent European legislation.
USA	Updating and Screening Assessment.
Validation (modelling)	Refers to the general comparison of modelled results against monitoring data carried out by model developers.
Validation (monitoring)	Screening monitoring data by visual examination to check for spurious and unusual

	measurements (see also ratification).
VSD	Adjustable speed drive (ASD) or variable-speed drive (VSD) describes equipment used to control the speed of machinery. Many industrial processes such as assembly lines must operate at different speeds for different products. Where process conditions demand adjustment of flow from a pump or fan, varying the speed of the drive may save energy compared with other techniques for flow control.

NON TECHNICAL SUMMARY

Clean Power (UK) Ltd (Clean Power) is making this application for a Bespoke Part A(1) Installation Permit Application under The Environmental Permitting (England and Wales) Regulations 2013, who will be operating the plant on the behalf of the site owners Clean Power Properties Ltd.

The Clean Power Site is located at Micheldever Rail Sidings, Overton Road, Micheldever Station, Hampshire, SO21 3AP, upon the site of a former oil storage and distribution facility.

The Installation comprises a waste treatment and renewable energy technology which incorporates a combination of Advanced Conversion Technologies (ACT) comprising pyrolysis and associated upstream processing and anaerobic digestion (AD).

The installation will process approximately 195,000 tonnes of non-hazardous waste comprising the following:

- A 12 MWe Pyrolysis ACT plant which will recover and recycle approximately 128,000 tonnes per annum of commercial and municipal mixed source waste; and
- A 2MWe AD facility which will recover approximately 67,000 tonnes per annum of food and food processing waste.

The proposed development is a bespoke energy and resource recovery centre that has been designed to recover all available resources from mixed waste feedstocks. The proposed development integrates the above technologies to provide a single treatment facility for solid wastes which would otherwise be destined to landfill or incineration.

The proposed Autoclave and Anaerobic Digestion processes are described within Section 5.4 *'Disposal, recovery or a mix of disposal and recovery of non-hazardous waste,'* Paragraph A(1)b(i) and (ii) namely;

'Recovery or a mix of recovery and disposal of non-hazardous waste with a capacity exceeding 75 tonnes per day (or 100 tonnes per day if the only waste treatment is anaerobic digestion) involving one or more of the following activities and excluding activities covered by Council Directive 91/271/EEC, by –

(i) Biological treatment

(ii) Pre-treatment of waste for incineration or co-incineration

Aspects of the pyrolysis process meet the definitions of a Part A(1) Installation under Section 5.1 *'Incineration and Co-Incineration Waste,'* Paragraph A(1)b namely;

'*The incineration of non-hazardous waste in an incineration or co-incineration plant with a capacity exceeding 3 tonnes per hour.'*

The proposed technologies meet the definition of a renewable technology as per Article 2 of the EC Directive 2009/28/EC on the '*promotion and use of energy from renewable sources and amending and subsequently repealing Directives 2001/77/EC and 2003/30/EC*', also referred to as the Renewable Energy Directive 2009.

Technology Overview

Clean Power wishes to operate a waste recovery and renewable energy Installation for the treatment and processing of mixed source waste and green waste. The proposed Installation will include two key technologies that can be broken down into seven key stages.

- Reception and Preparation: All solid and biomass wastes will be delivered into a sealed waste reception building. Pure biomass wastes and slurries are segregated and discharged directly into a reception pit and pumped into the anaerobic digestion plant. All mixed solid wastes are loaded via conveyer into a pair of pressure sterilisation (steam) autoclaves.
- Autoclaving: Two autoclaves will treat and sterilise all mixed source wastes. All biomass material within the mixed waste will be broken down to form a biomass (cellulose) fibrous flocculant.
- Mechanical Separation: The sterilised autoclave waste stream is processed through a materials recovery plant to segregate and recover all plastics, metals and inert materials. The remaining biomass flocculant is passed onwards to the pyrolysis plant for energy recovery.
- Pyrolysis: The pyrolysis plant converts the biomass into a clean synthesis gas and biochar material. The synthesis gas is processed and pumped to a storage vessel in advance of combustion within the gas engine CHP plant. All char is pulverised and used for a solid fuel to provide heat for the pyrolysis process.
- Anaerobic Digestion: Cleaned biogas from the anaerobic digestion process is pumped to the gas storage vessel in advance of combustion within the CHP engines. All digestate is pumped from the digestion tanks, sterilised and passed through a filter press to remove any solid content. Liquid digestate is sent for storage in tanks, all solid content is transferred to the autoclaves for conversion to fibre and further energy recovery.
- Gas Treatment: The gas will be scrubbed through a dedicated gas scrubbing/treatment line and then dried by passing through an air cooling plant.
- Gas Engines: Three gas engines, operated using syngas/biogas, will be coupled to an electrical generation plant producing approximately 12-15 MWe.

The Installation utilises a proprietary autoclaving process in order to produce a pure biomass fibre ('Biofibe'), which is subsequently pyrolysed to produce a high purity pyrolysis gas. This gas is subsequently blended with the AD biogas and used to generate electricity via the combustion of the pyrolysis gas within three gas fired spark ignition CHP engines[1].

The process will utilise two autoclaves for the processing of mixed source waste ('MSW') and the production of a biomass fuel product called *'Biofibe'*. Each autoclave comprises a rotating cylindrical structure (c. 18 meters long and c. 4 meters in diameter), with an internal cylinder fitted with a helical screw arrangement to facilitate mixing, loading and unloading of MSW. Each unit has an operating capacity of which will be typically 20 tonnes and is designed to break up the MSW through rotation (at a uniform temperature) and application of pressurised, high temperature steam.

1 There will be three gas engines installed at the site which will be operated on an N+1 basis.

The autoclaving process reduces the original volume of the waste materials by approximately 80%, with recyclates being automatically separated and recycled. The remaining biofibe is conditioned and utilised for the production of synthesis gas ('syngas') within the pyrolysis unit.

The pyrolysis plant comprises a single stationary technical unit containing four rotating retort chambers, connected to a common fuel feed system, gas conditioning plant and char handling system. The pyrolysis plant has been designed to process a maximum throughput of 15.9 tonnes per hour. Each retort chamber is refractory lined cylinder (c. 6.5m long and c. 4m in diameter) into which processed biofibe is fed via an air lock feed system.

Once inside the retort, the fibre is subjected to heat in an oxygen free environment and a chemical transformation takes place, producing syngas and a high purity char material. The char is subsequently used as the primary fuel and heat source for the pyrolyser and combusted within a vortex solid fuel burner system. For each tonne of fibre processed, approximately 0.4 tonnes of char is produced and subsequently combusted. All emissions arising from the combustion of char are quenched and filtered and released to atmosphere.

The syngas is evacuated to a centralized cooling, cleaning and storage system prior to being subsequently combusted within three gas Combined Heat and Power (CHP) engines in order to produce electricity. The pyrolysis gas produced by the pyrolyser has been determined to be '*fully recovered*' and meet an '*End of Waste*' position by the Environment Agency, therefore all onward combustion is not bound by the section 5.1 of the Industrial Emissions Directive.

The Anaerobic Digestion facility has been designed to operate using non-hazardous biodegradable waste. The plant will produce biogas which can subsequently be combusted within the three gas Combined Heat and Power (CHP) engines.

Emissions to Air

There are 6 (six) emission points to atmosphere, which are arranged in 2 (two) shared stacks. Stack 1 (pyrolysis plant) will comprise 2 internal flues (A1 – A2) corresponding to each of the pyrolyser ceramic filtration units. Stack 2 (gas engines) will comprise 3 (three) internal flues (A3 – A5) corresponding to each of the engines. An ground mounted enclosed emergency gas flare forms emission point A6.

All emissions to atmosphere arising from the pyrolysis units will be abated through the use of sorbent injection, ceramic filtration and Selective Catalytic Reduction. Subsequently, all concentrations will be well within the Emission Limit Values specified by Chapter 5.1 of the Industrial Emissions Directive.

The CHP gas engines (A3-A5) have been fitted with NOx reduction technology (SCR) and meet the indicative BAT emission benchmarks for spark ignition engines.

Emissions to Controlled Water

The Installation has an integrated waste water treatment plant has been designed to harvest, reuse and recycle all water produced by the plant. There are no process water discharges from the site.

All effluents produced by the plant are treated through the water treatment plant and used for boiler feed water.

All rainwater runoff falling within the curtilage of the site will be harvested and utilised for steam generation, vehicle and plant cleaning / washing etc.

The only discharges to controlled water will arise from the discharge of uncontaminated rainwater runoff in the event that all rainwater harvesting and storage tanks are full.

Any discharges from the water treatment plant (i.e. boiler blowdown) unit will be used to provide grey water for process wash down, floor cleaning, vehicle wash etc.

There will be one (1) emission point to surface water (W1), which relates to the discharge of clean surface water run off which will arise during periods of sustained high rainfall and when all rainwater harvesting storage tanks are at capacity. All excess surface water will be routed to the surface water discharge and released via a 3 stage interceptor to controlled waters. No process effluents will be discharged to W1.

Emissions to Sewer

With the exception of domestic sewage from the offices and toilet facilities, there will be no releases to sewer arising from the Installation.

Emissions to Land

There will be no emissions to land arising from the Installation.

Waste Management

The autoclave process will generate a number of sterile recyclates, all of which will be transferred off site for recycling. Typically the recyclate will comprise ferrous and non-ferrous metals (approximately 6% and 3% respectively), plastics and glass (approx 21% total yield).

The pyrolysation process will not inherently produce significant quantities of waste. With the exception of relatively small quantities of scrubber, baghouse and maintenance wastes, the primary waste stream from the installation will be an inert vitreous slag (melted charcoal ash) all of which will be reused off site as an aggregate material. A very small amount of fly ash will be produced by the plant.

There are no furnace bottom ashes or other wastes produced by the process.

Impact

The air emissions from the proposed installation have been modeled using atmospheric dispersion modeling software. The assessment considered the air impact to all identified residential, sensitive habitats and ecological receptors.

It is the conclusion of the modeling that the Installation is unlikely to have a significant impact at any of the receptor locations examined and is unlikely to have a significant impact on the environment

All of the air emissions from the Installation have been risk assessed against their potential impact on human health. The results of the assessment are that the proposed installation will not present a carcinogenic risk to human health.

1 INTRODUCTION

This document has been prepared on behalf of Clean Power (UK) Ltd by Sol Environment Ltd and provides supporting evidence as required by Environmental Permit Application Forms Part B2 and B3 issued by the Environmental Agency.

Clean Power (UK) Ltd (Clean Power) is making this application for a Bespoke Part A(1) Installation Permit Application under The Environmental Permitting (England and Wales) Regulations 2013 (as amended), who will be operating the plant on the behalf of the site owners Clean Power Properties Ltd (CPPL).

The Clean Power Properties Ltd site (*'the Site')* is located at Micheldever Rail Sidings, Overton Road, Micheldever Station, Hampshire, SO21 3AP, upon the site of a former fuel storage/distribution facility.

The proposed Installation forms an energy from waste facility which utilises Advanced Conversion Technologies (ACT) comprising advanced pyrolysis and anaerobic digestion with associated waste reception, steam sterilisation and waste recovery pre-treatment activities.

This Installation will be a bespoke energy recovery centre that has been designed to recover all available resources from mixed solid waste feedstocks. The proposed development integrates the above technologies to provide a single treatment facility for solid wastes that would otherwise be destined for landfill or incineration.

The treatment process will be permitted by the Environment Agency and be operated in accordance with the EPR 2013 Regulations.

The proposed Autoclave and Anaerobic Digestion processes are described within Section 5.4 *'Disposal, recovery or a mix of disposal and recovery of non-hazardous waste,'* Paragraph A(1)b(i) and (ii) namely;

'Recovery or a mix of recovery and disposal of non-hazardous waste with a capacity exceeding 75 tonnes per day (or 100 tonnes per day if the only waste treatment is anaerobic digestion) involving one or more of the following activities and excluding activities covered by Council Directive 91/271/EEC, by –

- *(i) Biological treatment*
- *(ii) Pre-treatment of waste for incineration or co-incineration*

Aspects of the pyrolysis and energy generation plant meets the description of an Installation as defined by Section 5.1 *'Incineration and Co-Incineration Waste,'* Paragraph A(1)b namely;

'*The incineration of non-hazardous waste in an incineration or co-incineration plant with a capacity exceeding 3 tonnes per hour.'*

The proposed technologies meet the definition of a renewable technology as per Article 2 of the EC Directive 2009/28/EC on the '*promotion and use of energy from renewable sources and amending and subsequently repealing Directives 2001/77/EC and 2003/30/EC*', also referred to as the Renewable Energy Directive 2009.

Pre-application discussions have been held with the Local Office (South East Region) of the Environment Agency regarding this project. All meetings and discussions have been held with David N Johnson.

The pre-application Number for the permit application is FP3639ZD.

Further details of the plant and equipment, emissions and impacts are detailed within the remaining sections of this document.

All technical appendices associated with the Installation are included within SOL0613CPP03_MD - Volume 2 and comprise the following:

- *Annex A:* Figures and Diagrams
- *Annex B:* Technical Information (commercially confidential)
- *Annex B1*: Energy Balance
- *Annex B2* CFD Modelling
- *Annex B3:* Engine Technical Information
- *Annex B4:* Water Treatment Plant Information
- *Annex B5:* Sorbent Injection Plant Information
- *Annex B6:* SCR Abatement Plant Information
- *Annex B7:* End of Waste Application
- Annex C: Technical Assessments
- *Annex C1:* H1 Assessment – Air Quality Impacts
- *Annex C2*: H5 Assessment – Site Condition Report
- *Annex C3:* Noise Impact Assessment
- *Annex C4:* Flood Risk Assessment
- *Annex D:* Management Plans
- *Annex D1:* Site Working and Operational Plan
- *Annex D2:* Odour Management Plan
- *Annex D3:* Accident Management Plan

The remainder of this application support document is structured accordingly:

- *Section 2:* Provides a detailed planning history of the site and associated activities;
- *Section 3:* Provides specific details associated with the New Bespoke Installation Permit Application;
- *Section 4:* Provides specific nature and detailed description of the emissions to air and water associated with the installation;
- *Section 5:* Provides details of all environmental monitoring associated with the Installation;
- *Section 6:* Provides an Environmental Impact and Assessment of the Installation.

The Installation Boundary and site layout is provided overleaf in Figures 1.1. and 1.2

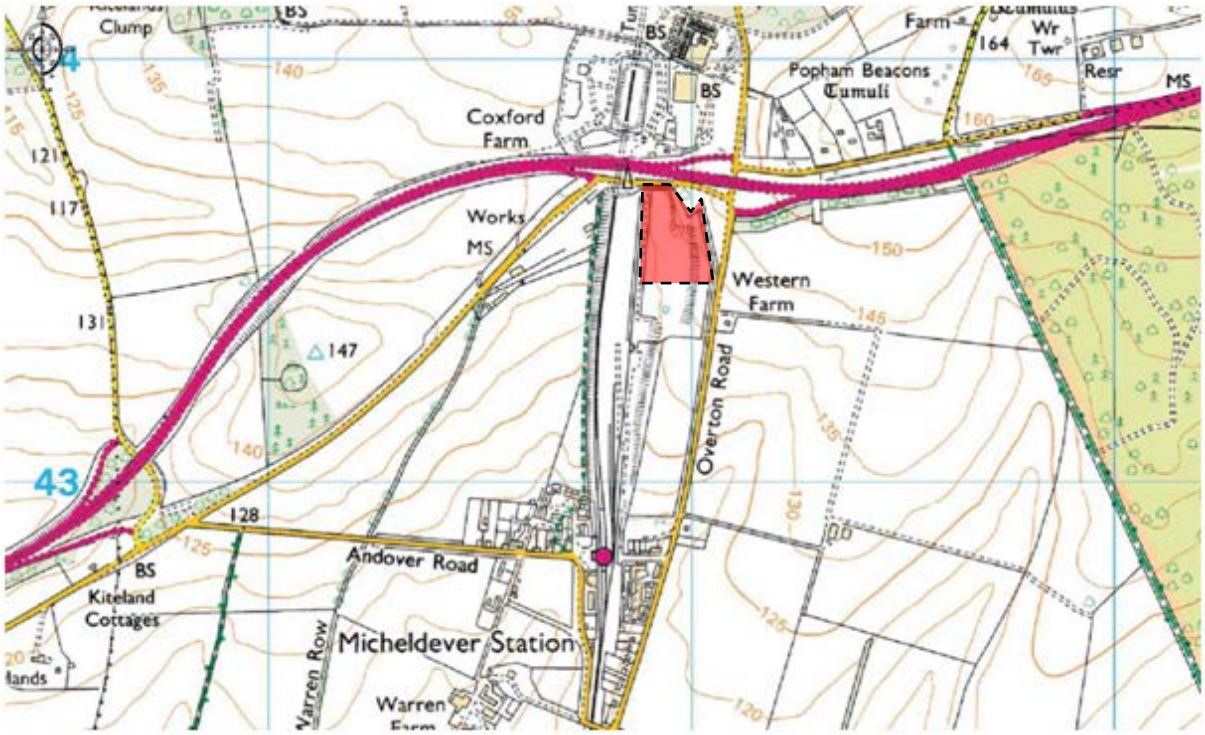

Figure 1.1 – Site Location

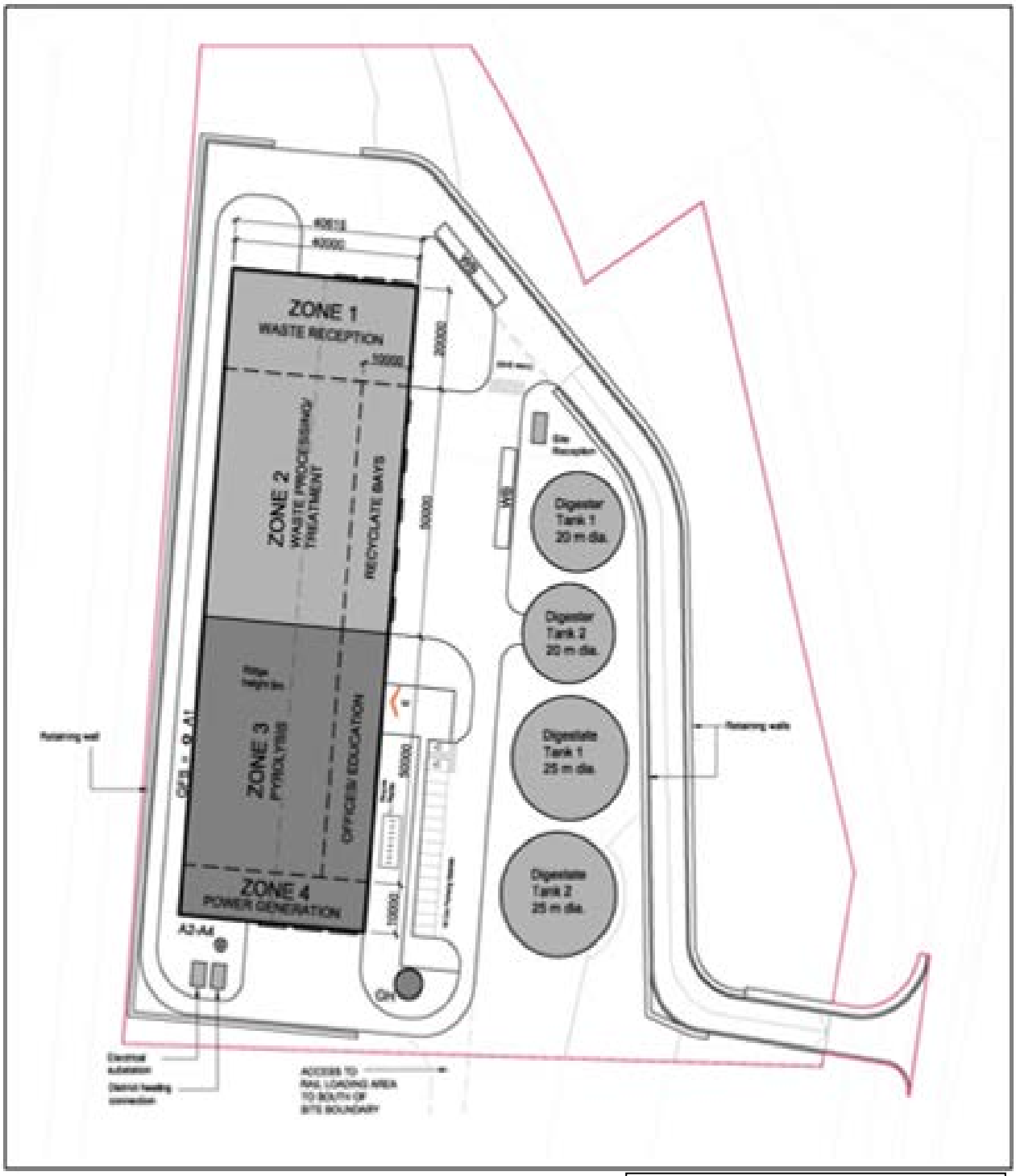

Figure 1.2 - Proposed Installation

2 PLANNING STATUS

Clean Power Properties Ltd made an application to Hampshire Council on 7th September 2012.

The application is currently being considered.

Table 2.1: Planning History

Reference	Description	Status	Date Granted
12/02013/HCS	The construction and operation of a 8MWe Pyrolysis Advanced Conversion Technology (ACT) plant including a 2MWe Anaerobic Digestion Plant associated office, visitor centre, with new access road and weighbridge facilities, solar panels, associated landscaping and surface water attenuation features.	Pending	-

3 PROPOSED NEW PERMIT

3.1 Type of Permit

Clean Power (UK) Ltd (the 'Operator' or 'Applicant') are making an application for a Bespoke Installation Permit for the proposed operation of a bespoke energy recovery centre that incorporates advanced conversion technology (Pyrolysis with associated autoclave pre-treatment and materials recovery and Anaerobic Digestion).

The Installation has been designed to accept approximately 195,000 tonnes of waste per year comprising:

- 128,000 tonnes of Mixed Source Waste; and
- 67,000 tonnes of which will be non-hazardous food waste.

The primary function of the Installation is to recover all possible recyclable materials and generate renewable heat and power from the biogenic fraction of all remaining waste materials.

The Site will be designed to accept non-hazardous waste in accordance with stringent site waste acceptance procedures.

The use of Advanced Conversion Technologies, *'pyrolysation'* as a means of thermal treatment meets the definition of an 'co-*incineration plant'* as defined by Chapter 5 '*Waste Management'* of Schedule 1 of the EPR Regulations.

The applicant wishes the permit to cover the following activities:

Table 3.1 IED Activities

Activity listed in EP Regulations 2013	Description of specified activity	Limits of specified activity	Specified waste management operation
Main Activity			
Section 5.1 Incineration and Co-incineration of Waste 5.1A(1)(b)	*The incineration of non-hazardous waste in an incineration or co-incineration plant with a capacity exceeding 3 tonnes per hour*	From receipt of MSW and other raw materials to dispatch from site. Pyrolysis of waste and associated pre-treatment of preparation, autoclaving and drying, grinding and heating, and storage and dispatch of waste products.	R1: Use principally as a fuel or other means to generate electricity R3: Recycling/reclamation of organic substances D9: Physico-chemical treatment resulting in final compounds or mixtures which are discarded by any of the operations numbered D1 to D12, e.g. evaporation, drying, calcinations
Directly Associated Activity			
Section 5.4 Disposal, recovery or a mix of disposal and recovery of non-hazardous waste 5.4A(1)(b)(i) & (ii)	Recovery or a mix of recovery and disposal of non-hazardous waste with a capacity exceeding 75 tonnes per day (or 100 tonnes per day if the only waste treatment is anaerobic		R1: Use principally as a fuel or other means to generate electricity R3:Recycling/reclamation of organic substances R4: Recycling/reclamation of metals and metal compounds

	digestion) involving one or more of the following activities and excluding activities covered by Council Directive 91/271/EEC, by i) biological treatment ii) pre-treatment of waste for incineration or co-incineration		

The clean synthesis gas produced by the plant has been subject to an '*End of Waste'* determination by the Environment Agency and has been determined to meet the necessary test to be determined as a 'product'.[2]

Accordingly, the combustion of the resultant pyrolysis gas produced by the pyrolysis plant within the CHP plant does not meet the IED definition of an Incineration process. This position is supported by the EU Judgment of the Court (Second Chamber) of 4 December 2008 (reference for a preliminary ruling from the Korkein hallinto-oikeus —Finland) — Lahti Energia Oy (Case C-317/07), which decreed that;

'a gas plant whose objective is to obtain products in gaseous form, in this case purified gas, by thermally treating waste must be classified as a 'co-incineration plant' within the meaning of Article 3(5) of Directive 2000/76;

and that *'a power plant which uses an additional fuel, in substitution for fossil fuels used for the most part in its production activities, a purified gas obtained by the co-incineration of waste in a gas plant does not fall within the scope of that directive.'*

On the basis of the above decision, although aspects of the pyrolysis plant [namely the combustion of the biochar] is still regarded as an incineration process, the directly associated downstream power plant activities (CHP Engines) using the clean synthesis gas activities would not be regarded as either incineration or co-incineration.

All waste activities carried out at the site i.e. Waste Preparation, Autoclaving and Recovery are considered to be technically linked to the main activity and are included within the installation boundary of the site.

The technical guidance note used in the preparation of this application document is:

- 'EPR – *The Incineration of Waste (reference EPR 5.01)';*
- 'EPR *The treatment and disposal of non hazardous waste (reference EPR 5.06)'.*

The main issues identified within this guidance document and the relevant Best Available Techniques have been built into the procedures that the site will follow during operation of the site.

2 End of Waste determination was submitted to Howard Leberman, Head of Site Based Regulation on 22nd December 2011 and granted on 22nd March 2012

3.2 Details of the Installation

3.2.1 Installation Boundary

All proposed new operations will be contained within the existing site boundary. A figure showing the proposed building configuration and Installation boundary has been provided in Section 1, Figure 1.1 and Figure 1.2.

3.2.2 Building design and layout

The Energy Recovery Centre shall incorporate the construction of a purpose built new 5200m^2 building to accommodate the entire facility.

The main building will comprise a single impermeable technically engineered double skinned portal framed structure 130m by 40m, at a height of 9m (to the ridge).

The building will be constructed with a proprietary curtain wall cladding system designed to ensure adequate air-tightness and acoustic and thermal performance.

The main building will house approximately 400m^2 of internal offices, meeting rooms and visitor education areas.

The building will be subdivided internally to house the separate processes and be zoned to comply with relevant industrial safety regulations i.e. gas safety regulations, explosive atmospheres etc.

The south facing elevation of the main building roof will incorporate approximately 250m^2 of solar photovoltaic panels.

There will be a combined stack associated with the pyrolysis plant, which will contain 2 flues and be 25m in height and a maximum of 1m in diameter.

Each engine will have a single exhaust stack 100cm in diameter which exits through the building to a height of 25m, all grouped together to appear as a single exhaust stack approximately 2m wide.

An enclosed ground mounted emergency flare will be fitted in close proximity to the engines and gas holder. This will burn excess gas within an enclosed small chamber and comprise of a non-visible diffused flame.

Building Construction

The building will be constructed around a structural steel frame which will support the cladding between the main structural members without secondary steel.

The floor slab will be generally designed to take 50kN/m^2 or to accommodate plant loading as required.

Ancillary Buildings and Structures

A number of ancillary structures shall be located adjacent to the waste reception and pyrolysis building, including; a small gasometer (c. 6m (d) x 9m (h)), a cooling plant and a static pressurised nitrogen cylinder.

Two small buildings of approximately 5m by 3m at a height of 3m will house the electricity sub-station and district heating connection and metering equipment serving the facility.

A small security/gatehouse building will be located adjacent to the site access and exit.

The site includes entry and exit weighbridges and wheelwashes.

The site will be fitted with 2 x Anaerobic digestion tanks (25m dia) and 2 x Anaerobic Digestion tanks (25m dia). The tanks will be fitted externally within a bunded compound and have a wall height of 9 m. The double membrane roof will extend to a maximum height of 9m.

Roadways and External Areas

An internal roadway system has been designed to give safe access to the waste reception areas, recyclate collection bays, power generation and digestate tanks.

Separate segregated pedestrian walkways and car parking areas have been provided to allow for safe access and egress of all personnel at site.

The layout of the site allows access to the existing railway sidings for the future access and use of the rail network should it become available for use.

The internal process layout has been provided in Section 2.

3.3 Description of the process

The proposed waste treatment plant includes two key technologies that can be broken down into seven key stages. A summary description of each of the processes is provided in Table 3.2 below;

Table 3.2: Summary Process Description

Process	Description
Reception and Preparation	All MSW wastes will be delivered directly into a waste reception building (operated under negative pressure). All mixed wastes are delivered into above ground waste reception hoppers and are inspected prior to loading into the autoclave processes. Pure biomass wastes will be diverted to the dedicated Anaerobic Digestion reception bay where wastes will be macerated and pumped directly to the AD treatment tanks. The reception building is fully sealed, controlled under negative pressure and extracted to the main thermal oxidiser plant.
Autoclaving	There will be two autoclaves (with individual batch capacities of c. 20 tonnes) installed side by side for the treatment / sterilisation of all mixed solid wastes. The autoclaves will break down all biomass materials into a biomass fibre flocculant through application of pressure and heat. All potential recyclates (plastic, metal, glass etc) will remain unchanged and pass through the autoclave unaffected (except for being cleaned and sterilised). All autoclave hood extraction systems are routed back to the main odour control plant (thermal oxidiser.).
Mechanical Separation	The processed waste will be passed through a mechanical separation processing line which will systematically remove and segregate the individual waste streams. All recyclates (plastic, metal and glass) will be segregated and sent off site for recycling, all biomass fibre and flocculant

	materials will be passed forward for processing within the pyrolysers.
Pyrolysis	The pyrolysis plant systems will dry and pyrolyse the fibre material and convert it to synthesis gas ('syngas'). The pyrolysis retorts are heated through the use of a solid fuel burner system which utilises the char residues from the pyrolysis process as fuel. The synthesis gas will pass through a gas cleaning line and stored in a gasometer prior to combustion. The pyrolysers will be fitted with end of pipe, NOx abatement equipment.
Anaerobic Digestion	All macerated biodegradable food wastes and green waste is digested within the primary Anaerobic Digestion tanks, before being further macerated (9-12mm) and then passed into the secondary digesters. All biogas produced by the plant will be collected within the headspace of the tank, extracted and cleaned through a gas clean up line and transferred to the syngas/biogas buffer/storage tank. After a period of approximately 60 days the digestate will be progressively transferred from the secondary digester into the batch sterilisation tanks and sterilised. Once sterilised, the digestate is passed through a screw press and all solid material is transferred back to the reception hall for processing through the autoclaves for energy recovery. The screw press and batch sterilisers are all located within the sealed main building. All liquid digestate will be batched into storage tanks and be transferred off site as a liquid fertiliser product. All AD tank vents are routed back into the main odour control plant (Thermal Oxidiser).
Gas treatment	The gas treatment line comprises a wet or dry gas closed loop line for quenching the gas to ambient temperature. The gas will be scrubbed through a dedicated de-ionised water gas scrubbing / treatment line and then dried by passing through an air cooling plant. Biogas generated from the anaerobic digestion processes will be re-introduced at this stage.
Gas engines	There will be three gas engines each coupled to an electrical generation plant producing a total of approximately 12MWe. These engines are designed to operate using biogas and syngas and will be providing electrical generation for the National Grid network. All engines will be fitted with end of pipe, NOx abatement equipment utilising SCR technology.

More detailed equipment specifications have been included within Section 3. A simplified process layout is provided in Figure 3.1 and Figure 3.2 overleaf.

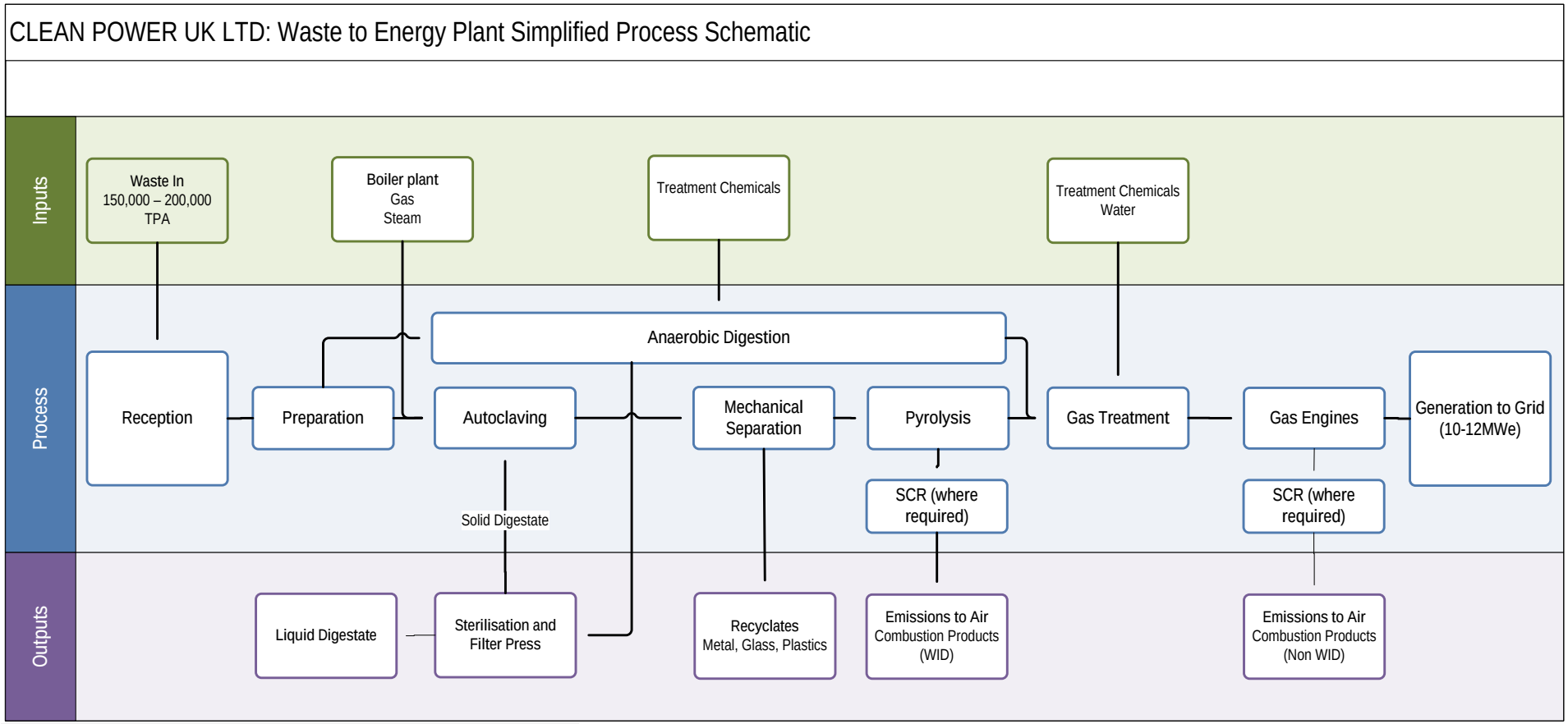

Figure 3.1: Waste Recovery Facility – Simplified Process schematic

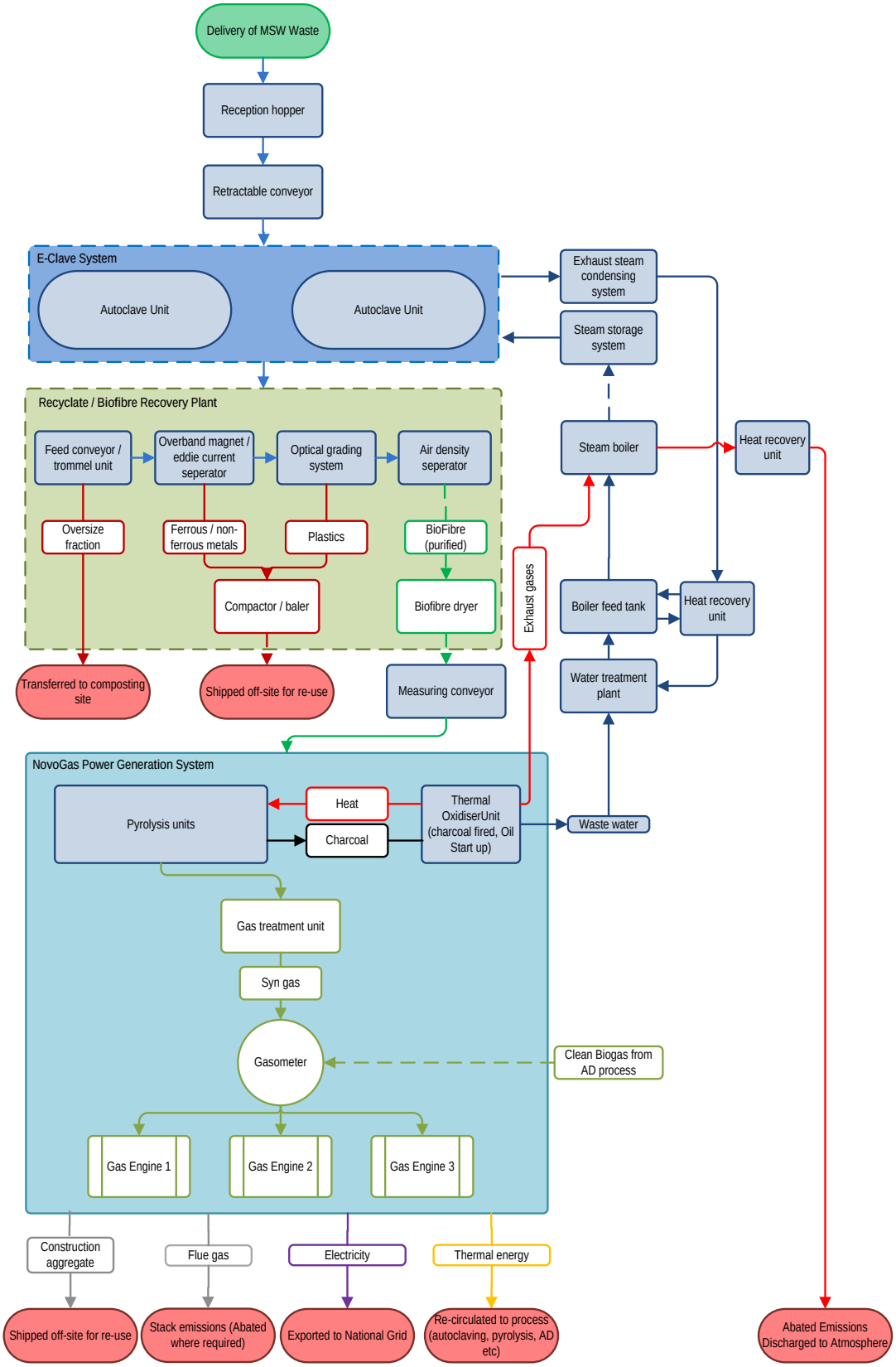

Figure 3.2: Waste Recovery Facility – Simplified Process schematic

Raw Materials

Waste Feedstocks

The Installation will be permitted to accept a maximum of 195,000 tonnes of waste per year. The Autoclave / Pyrolysis ACT plant will recover and recycle approximately 128,000 tonnes of Mixed Source Waste per year and the Anaerobic Digestion plant will recover approximately 67,000 tonnes of non-hazardous food waste per year.

Table 3.3: Proposed Feedstock Quantities

Waste Code	Description
02	WASTES FROM AGRICULTURE, HORTICULTURE, AQUACULTURE, FORESTRY, HUNTING AND FISHING, FOOD PREPARATION AND PROCESSING
02 01	wastes from agriculture, horticulture, aquaculture, forestry, hunting and fishing
02 01 03	plant-tissue waste
02 01 04	waste plastics (except packaging)
02 01 07	waste from forestry
02 01 10	waste metal
02 02	wastes from the preparation and processing of meat, fish and other foods of animal origin
02 02 02	animal-tissue waste
02 02 03	materials unsuitable for consumption or processing
02 03	wastes from fruit, vegetables, cereals, edible oils, cocoa, coffee, tea and tobacco preparation and processing; conserve production; yeast and yeast extract production, molasses preparation and fermentation
02 03 04	materials unsuitable for consumption or processing
02 05	wastes from the dairy products industry
02 05 01	materials unsuitable for consumption or processing
02 06	wastes from the baking and confectionery industry
02 06 01	materials unsuitable for consumption or processing
02 07	wastes from the production of alcoholic and non-alcoholic beverages (except coffee, tea and cocoa)
02 07 01	wastes from washing, cleaning and mechanical reduction of raw materials
02 07 04	materials unsuitable for consumption or processing
03	WASTES FROM WOOD PROCESSING AND THE PRODUCTION OF PANELS AND FURITURE, PULP, PAPER AND CARDBOARD
03 01	wastes from wood processing and the production of panels and furniture
03 01 01	waste bark and cork
03 01 05	sawdust, shavings, cuttings, wood, particle board and veneer other than those mentioned in 03 01 04
03 03	wastes from pulp, paper and cardboard production and processing
03 03 01	waste bark and wood
03 03 07	mechanically separated rejects from pulping of waste paper and cardboard
03 03 08	wastes from sorting of paper and cardboard destined for recycling
03 03 10	fibre rejects, fibre-, filler-, and coating-sludges from mechanical separation
07	WASTES FROM ORGANIC CHEMICAL PROCESSES

07 02	wastes from the MFSU of plastics, synthetic rubber and man-made fibres
07 02 13	waste plastics
15	WASTE PACKAGING; ABSORBENTS, WIPING CLOTHES, FILTER MATERIALS AND PROTECTIVE CLOTHING NOT OTHERWISE SPECIFIED
15 01	packaging (including separately collected municipal packaging waste
15 01 01	paper and cardboard packaging
15 01 02	plastic packaging
15 01 03	wooden packaging
15 01 04	metallic packaging
15 01 05	composite packaging
15 01 06	mixed packaging
15 01 07	glass packaging
15 01 09	textile packaging
18 01	WASTES FROM NATAL CARE, DIAGNOSIS, TREATMENT OR PREVENTION OF DISEASE IN HUMANS
18 01 02	Body parts and organs including blood bags and blood preserves (except 18 01 03)
18 01 04	Wastes whose collection and disposal is not subject to special requirements in order to prevent infection (for example dressings, plaster casts, linen, disposable clothing, diapers)
18 02	WASTES FROM RESEARCH, DIAGNOSIS, TREATMENT OR PREVENTION OF DISEASE INVOLVING ANIMALS
18 02 03	Wastes whose collection and disposal is not subject to special requirements in order to prevent infection
19	WASTES FROM WASTE MANAGEMENT FACILITIES, OFF-SITE WASTE WATER TREATMENT PLANTS AND THE PREPARATION OF WATER INTENDED FROM HUMAN CONSUMPTION AND WASTE FOR INDUSTRIAL USE
19 05	wastes from aerobic treatment of solid wastes
19 05 01	non-composted fraction of municipal and similar waste
19 05 02	non-composted fraction of animal and vegetable waste
19 05 03	off-specification compost
19 06	wastes from anaerobic treatment of waste
19 06 04	digestate from anaerobic treatment of municipal waste
19 06 06	digestate from anaerobic treatment of animal and vegetable waste
19 08	wastes from waste water treatment plants not otherwise specified
19 08 01	screening
19 08 12	sludges from biological treatment of industrial waste water other than those mentioned in 19 08 1
19 08 14	sludges from other treatment of industrial waste water other than those mentioned in 19 08 03
19 09	wastes from the preparation of water intended for human consumption or water for industrial use
19 09 01	solid waste from primary filtration and screenings
19 09 02	sludges from water clarification
19 12	wastes from the mechanical treatment of waste (for example sorting, crushing, compacting, pelletising) not otherwise specified

19 12 01	paper and cardboard
19 12 02	ferrous metal
19 12 03	non-ferrous metal
19 12 04	plastic and rubber
19 12 05	glass
19 12 07	wood other than mentioned in 19 12 06
19 12 10	combustible waste (refuse derived fuel)
19 12 12	other wastes (including mixtures of materials) from mechanical treatment of wastes other than those mentioned in 19 12 11
20	MUNICIPAL WASTES (HOUSEHOLD WASTE AND SIMULAR COMMERICAL, INDUSTRIAL AND INSTITUTIONAL WASTES). INLCUDING SEPARATELY COLLECTED FRACTIONS.
20 01	separately collected fractions (except 15 01)
20 01 01	paper and cardboard
20 01 02	glass
20 01 08	biodegradable kitchen and canteen waste
20 01 38	wood other than that mentioned in 20 01 37
20 01 39	plastics
20 01 40	metals
20 02	garden and park wastes(including cemetery waste)
20 02 01	biodegradable waste
20 02 03	other non-biodegradable waste
20 03	other municipal wastes
20 03 01	mixed municipal waste
20 03 02	waste from markets
20 03 99	municipal wastes not otherwise specified
Total	*All wastes listed above will be less than 195,000 tonnes per annum*

It is also intended that the solid fraction of the Anaerobic Digestate material is reprocessed through the autoclave units and processed. [3]

Notwithstanding the specification of waste above, waste shall not be accepted at the site which has any of the following characteristics;

- Consisting solely or mainly of dusts, powders or loose fibres;
- Defined as hazardous or Infectious;
- Drummed waste; or
- Malodourous wastes.

Waste deliveries will take place on a weekday, daytime basis only, with additional deliveries on Saturday morning and in emergency scenarios.

[3] All liquid digestate materials will be transferred off site for disposal and use for beneficial soil conditioning, fertilisers etc.

Process consumables

The waste operations at site will not require large volumes of process chemicals or raw materials beyond the waste feedstocks. The key process consumables are listed in table 3.4 below:

Table 3.4: Raw Materials Summary

Material	Approx Quantity	Nature of storage	Location	Fate
Gas Oil	< 100 m^3 per annum	Bunded oil tank < 10m^3 maximum storage Double skinned steel tanks stored internally and designed in accordance with EA PPG2 OST's.	Internal	100% combusted within pyrolyser burners during start-up and first hours of operation only.
Lubrication Oils	< 10m^3 per annum	Bunded oil tank < 1m^3 Double skinned tanks stored internally and designed in accordance with EA PPG2 Oil Storage Tanks.	Internal	Used within Gas engines. All oils disposed off site
Nitrogen	Approx 50m^3 per day	Static pressurised cylinder 3 tonnes maximum storage	Dedicated external compound adjacent to Reception Building	100% vented to atmosphere through pyrolyser and thermal oxidiser
Oxygen	< 1m^3 per day	Static pressurised cylinder	Dedicated external compound adjacent to Reception Building	100% injected in to AD reactor tanks, used for Hydrogen Sulphide removal
Ferric Oxide	5 -10 m^3	Internal enclosed tank	Dedicated vessel within reception building	100% injected into AD reactor tanks, used for Hydrogen Sulphide removal
Biocides & Corrosion Inhibitor	< 10m^3 per annum	Bunded plastic tanks < 1m^3	Internal	100% to process
Flocculants and Coagulants	< 10m^3 per annum	Bunded plastic tanks < 1m^3	Internal	100% to process
Urea	1m^3 per day	Bunded storage tank or IBC's	Internal	100% injected into SCR abatement
Anhydrous Lime	<10m^3 per annum	Internal hopper	Internal	100% injected into SCR abatement
Water	Approx 40m^3 per day (~15,000m^3 PA)	Mains supply and recovered rainwater storage tank (50% provided through greywater recycling)	Internal	100% to process

3.3.1 Zone 1: Waste reception

Vehicles will enter the site via the main entrance roadway over a weighbridge in accordance with an agreed vehicle movement (delivery and servicing) plan[4]. All vehicles will be directed from the weighbridge to the internal reception area (Building Zone 1) irrespective of waste type. The reception of all solid wastes (MSW) and appropriate biomass containing commercial waste will take place within the main waste reception area. Vehicles containing liquid or pumpable food wastes (delivered by tanker) will have the facility to connect directly to the AD tanks to discharge their loads via a close coupled connector.

The waste reception area is a purpose built, sealed internal reception area which is operated under negative pressure in order to mitigate potential odour dispersion impacts.

Vehicles will access the internal waste reception and dispatch areas of the internal waste reception area (see Figure 3.3) by a number of doorways, comprising externally mounted heavy duty metal roller shutter doors (for overnight security), with internally mounted rapid-closing heavy-duty polyethylene roller shutters to permit access in and out of the building by vehicles during normal working hours.

The main vehicle access doorways have been fitted with perimeter extraction / air curtains to ensure that the building can maintain a pressure controlled environment during vehicle access and egress. An additional internal 'entrance lobby' arrangement has been designed into the vehicle access entrance to provide further protection in regards to odour escape.

The reception area shall contain a number of sealed isolated bays fitted with push floor transfer system.

The physical reception area has been designed to accommodate all waste vehicles likely to arrive on site. The internal space within the reception area is sufficient to allow the access and discharge of large articulated transporters used for domestic and commercial waste transport and comprise of an initial holding bay and associated transfer systems. With the exception of food waste, all solid wastes will initially be discharged onto the reception area and undergo initial inspection, prior to being transferred directly into the loading system of the autoclave for stream sterilisation.

The waste reception area and loading system comprises the following:

- Weighbridge (capable of taking the full range of delivery vehicles);
- In-feed ferrous magnet (for the removal of oversized metals);
- In-feed shredder (capable of shredding c. 30 tonnes per hour);
- Grab crane (capable of lifting c. 4 tonnes of waste per grab);
- In-feed conveyor system (capable of delivering full 20 -25tonne load to autoclave in approx 15 minutes);
- In-feed weighing system (to register accurate batch weights);
- Hydraulic moving floor; and
- Segregation area for rejected/quarantined waste.

Once unloaded, vehicles will be inspected and returned to the weighbridge.

4 The Delivery and Servicing Plan has been prepared, submitted and forms part of the planning application transportation assessment (TA) documentation

Any wastes which do not conform to the requirements of the site, i.e. contain visually identifiable hazardous contaminants (oil, solvents, car batteries, WEEE etc), exceed the size requirements etc, will be segregated and isolated/quarantined. All non conforming wastes will be rejected in accordance with the site waste rejection procedures.

All pure organic biodegradable waste will be delivered directly in a dedicated inlet hopper of a 40m^3 capacity located in the delivery bay of the main waste building. The hoppers are located internally and contain maceration and pumping equipment to allow the transfer of material directly into the digestion tanks via a closed pumping system. The loading hopper is located within a sealed concrete pit.

The hoppers have been installed with a splash shield to prevent material “overshooting” the edge of the container and ending up on the bottom of the pit. The entry hopper is provided with a stainless steel lid, which will be opened and closed hydraulically prior to and after loading. All pure biomass matter will be macerated, blended and pumped directly into the digestion tanks.

A figure showing the reception building is provided in Figure 3.3 overleaf.

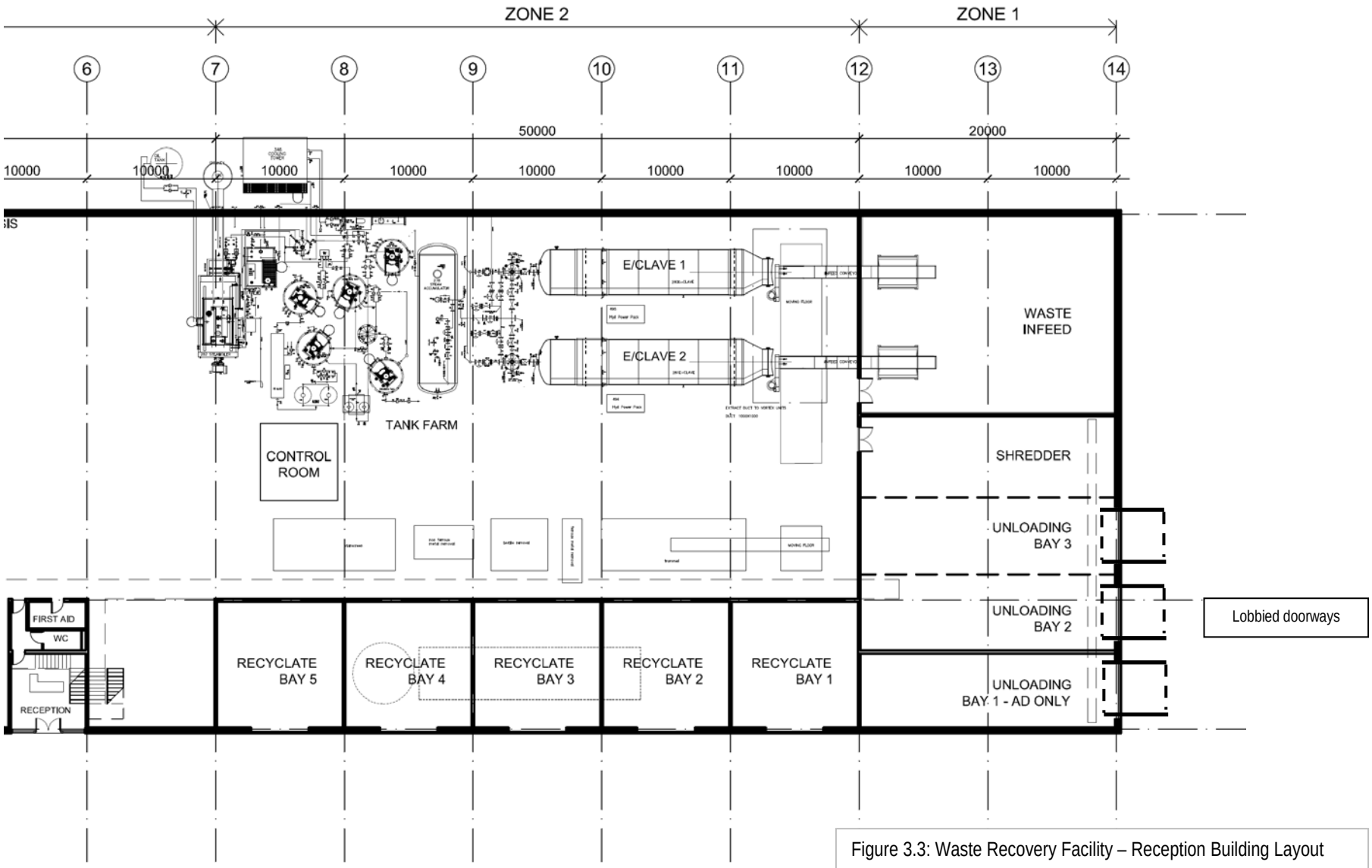

Figure 3.3: Waste Recovery Facility – Reception Building Layout

Details of venting/odour abatement

The waste reception and main processing building will be operated under a negative pressure system, drawing air from within the reception area building and ducting it to the pyrolysation plant for use as combustion air. Within the reception hall the building will be equipped with a ultra-violet (UV) and ozone odour treatment technology plant.

The extraction of combustion air from within the building for both the pyrolysation and engine plants ensures that the building is maintained at a negative pressure (normally maintained at 50 - 100Pa) thus minimising the potential escape of odour and bioaerosols from the building.

The building also incorporates vapour capture and extraction canopies over the doors of the autoclaves which again are ultimately ducted to the pyrolysation units.

The building has been designed to be air tight, operated under negative pressure and to duct all air through the combustion systems air intakes.

Specific detail regarding the odour control systems is provided within the Odour Management Plan (Application Support Document Vol2 – Annex D2 Odour Management Plan).

3.3.2 Zone 2: Steam Sterilisation (Autoclaving) and Biofuel Preparation

Zone 2 contains a pair of autoclaves, each with a nominal capacity of 20 -25 tonnes. The Autoclaves are constructed to the ASME VIII DIV2 CE Marked standard and will be operated in compliance with the UK boiler and pressure vessel regulations. A high level of safety has been designed into the vessels and operation is monitored both on site and from a remote location on a 24hr, 7 days a week basis.

The use of the autoclave within the waste treatment system is key to the preparation of a homogenous biomass feedstock. An added advantage is that the autoclave process also sterilises and cleans all of the recyclable materials ensuring that any possible waste contamination or pathogens are removed. The autoclave is fully compliant with the 'pressure sterilisation' methods described by the Animal By-Products Regulations and associated controls and easily achieved the required time / temperature requirements to ensure compliance.

Each autoclave will be approximately 18 - 20 metres long x 4 metres wide and will be loaded via a mobile conveyor. The autoclaves are designed to operate on a 24 hour day basis and the maintenance schedules will allow for at least one autoclave operating at all times.

The autoclave units comprise sealed, rotating insulated stainless steel drums with a superheated steam injection system. They provide two methods of waste treatment, these being:

- Steam sterilisation of wastes; and
- Physical agitation, resulting in homogenisation of treated waste, removal of labels and print.

Mixed solid wastes will be transferred from the reception hopper and conveyed directly through the entry door of the autoclaves. The two autoclaves will be located in the approximate centre of the building.

Each unit has a nominal operating capacity of 20 tonnes. When loaded, the autoclave units are sealed and the sterilisation process begins. Each unit is rotated (along the long, horizontal axis) at a rotation of approximately 10

revolutions per minute. Internal helical fins turn, mix and break up the wastes. The movement of waste within the unit as it rotates also contributes to the breaking up and compressing of wastes.

Each vessel is mounted upon a heavy-duty steelwork structure, which is mechanically driven to position the vessels for loading, unloading and rotation during the autoclaving/pressure-cooking period. The mechanical system also drives the rotational mechanism of the vessels. An automatic control system dictates the sequenced operation and controls the steam pressurisation, steam venting and vessel depressurisation procedures via a steam distribution system complete with all the necessary hardware.

Door operation will be fail safe and will not allow the opening sequence to start unless the vessel is completely depressurised.

Steam for the autoclave is supplied from a heat recovery steam generator (HRSG) system connected to the pyrolysis unit. Steam will be delivered to the steam storage system charged to 16 Bar. Dry saturated steam at 5 Bar is supplied to the relevant Autoclave via a steam distribution system under the supervision of the central control system. Pressurised steam at a temperature of about 140 – 160°C is introduced into the units at 5 bar.

The autoclaving process reduces the original volume of the waste materials by approximately 80%. The other components within the waste are clean and sanitised, plastics shrink and form a generally spherical shape due to the temperature and residence time within the autoclave.

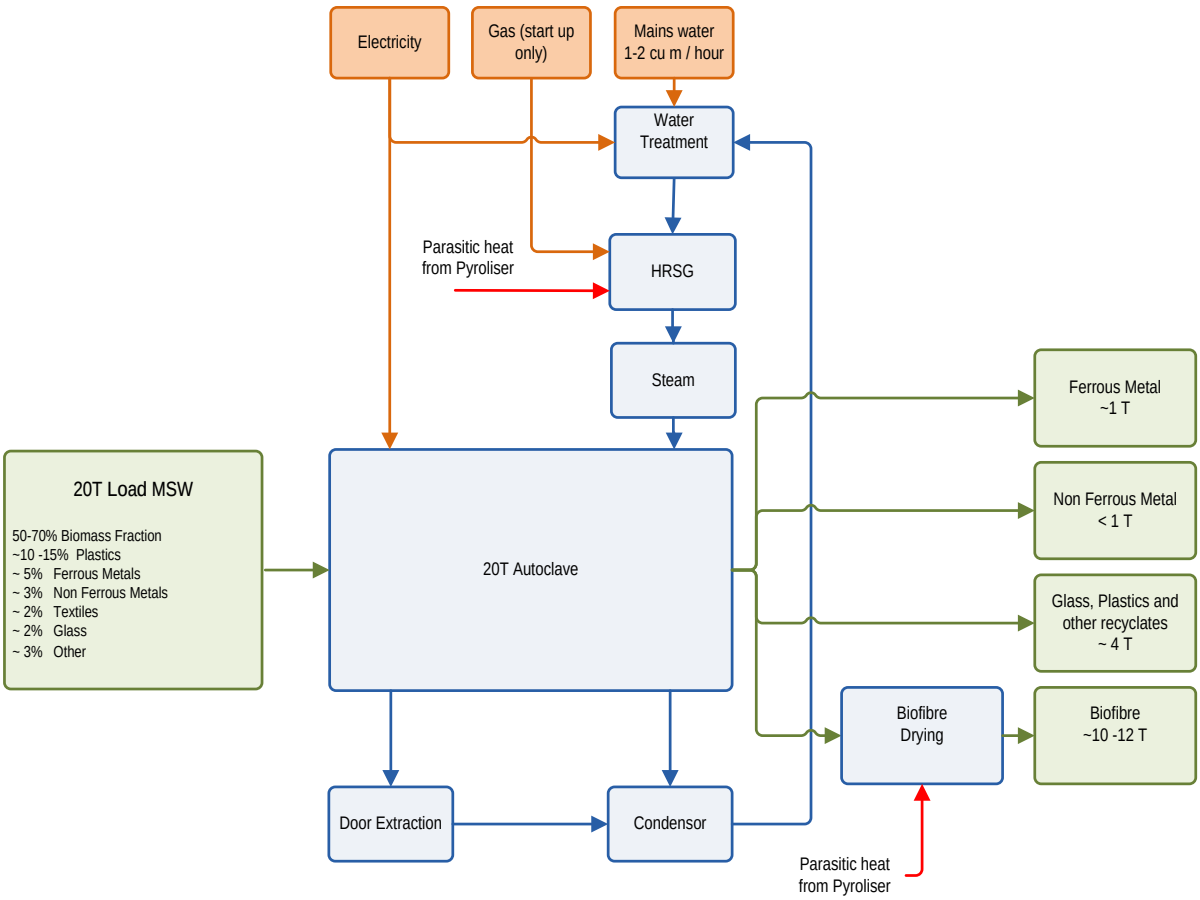

Figure 3.4: Waste Recovery Facility – Autoclave Process Flowchart

Fig 3.5 & 3.6 . – Waste Recovery Facility – Autoclave Internals pre and post steam sterilisation

Following completion of the process cycle the autoclave will be automatically depressurised. The exhaust steam is condensed and all waste heat is recovered through a large plate heat exchanger. The condensate is then processed by the main water treatment system and reused as boiler feed water. The small amount of non-condensable gases within the autoclave exhaust is contained and routed to the pyrolysis units and thermally destructed. All contaminants within the steam and condensate will be treated and removed by the water treatment plant.

When the autoclave doors are opened, approximately 60m^3 of flash steam vapour (c.90 - 100°C) will be released and extracted by the autoclave door hoods. This steam is condensed by passing through the plate exchanger and the water is subsequently reprocessed through the water treatment plant.

Once the steam has been evacuated from the autoclave chamber, the doors are opened to permit discharge of treated wastes. Discharge is driven by the rotation of the cylinder and the internal fins.

The treated mixed waste is discharged from the autoclave and onto a moving floor conveyor for transport to the segregation area.

3.3.3 Autoclave Ancillary Plant

Water Treatment Plant

All process water used by the plant is recycled and recovered within the central water treatment and recovery plant. The plant has been designed to recover all grey water as well as utilise all water from the building operations, internal drains and rain water.

The effluent treatment plant has been specifically designed to handle the high variation of possible contaminants which may be present in the condensate and which could include heavy metals, VOC's, fatty acids and nitrogenous and sulphurous products.

The system has been designed such that all process and chemical tanks are located with secondary containment bunds, fitted with level gauges and alarms. The system will be fully automated, closed loop and will operate continuously. The plant will be fully integrated into the SCADA control and PLC systems.

The water treatment plant forms part of the autoclave ancillary plant and comprises a combination of conventional pH control, co-agulation, flocculation, sand filtration and membrane filtration technologies.

All aspects of the plant are proprietary items and industry standard pieces of equipment manufactured by companies as follows:

- Steam condenser: Manufactured by Alfa Laval;
- Transfer pumps (Grundfoss)
- pH correction and Monitoring (Nalco or similar);
- Tangential Flow Separator for separation of flocculated suspended solids (GEA Westfalia)
- Sludge transfer pumps (Grundfoss)
- Clarified liquor transfer pumps (Grundfoss)
- Sand filter for the removal of fine solids (pre sand filter and carbon filter by Seimens Hydroclear);
- Carbon filter for the removal of VOCs and aromatics (Seimens Hydroclear)

- Reverse osmosis unit for removal of trace metals and salts (HERCO / Pollet Water Group);
- Final liquor storage tank (post sand and carbon filters) for mixing with softened water prior to boiler feed.)

Condensate will be maintained at a pH of approximately 8.5 to eliminate the potential for malodourous emissions arising (resulting from the acidic gassing off of fatty acids). The effluent is then pumped to the treatment plant, where flocculated suspended solids are removed and pumped to the sludge tank for reintroduction to the autoclave.

Clarified water is then routed to the clarified water storage tank where it is passed through a sand filter to remove any small or fine solids which have remained. The carbon filter will remove any remaining VOC's or odour.

Once the clarified water has exited the carbon filter it will pass through a reverse osmosis unit which will remove any salts and polish the water for reuse as boiler feed water in the clean process water storage tank. The discharge from the RO unit will be used to provide grey water for process wash down, floor cleaning, truck wash etc.

The volume of water entering the RO is approximately 16m^3/ph with 12m^3/hr to clean process water storage and 4m^3/hr going to grey water use.

Information relating to the WWTP is provided within Application Support Doc Vol 2 – Annex B4.

Autoclave Steam Production

Steam is generated in the pyrolyser heat recovery steam generation (HRSG) plant. When in normal operation all the necessary heat requirements are provided through the rejected heat of the pyrolysation process. This plant also has the capability to generate steam independently by the use of a number of gas oil burners. All of the steam generated by the plant is fed to a steam accumulator. The plant is rated to provide approximately 12,000 kg of steam per hour.

The typical water consumption is between 3.5 and 4.4m^3 of water per 20 tonne batch of MSW.

Once they are loaded and sealed, superheated steam is injected into the autoclave vessels. The temperature within the vessels reaches 140 - 160°C. The vessels are rotated at approximately 10rpm for up to 1 hour, at which point steam sterilisation is completed. Upon completion of the steam treatment within the autoclave, the central control system activates the depressurisation sequence. Control valves and a steam powered ejector unit steadily reduce the steam pressure within the autoclave. During the falling autoclave pressure, high pressure water "flashes" to steam vapour. As much as possible of this vapour is recovered by the steam extraction system when the main door is opened / depressurised.

Recovered steam (approximately 20-25% of input) is condensed to water and passed through a water treatment plant before being passed back into the steam generation plant.

Secondary Steam Capture

All steam released from the main door autoclave during unloading (approx 60m^3) is extracted via stainless steel ductwork and passed through a condenser/reheater to a chilled water cooler battery (condenser). This drops the

vapour down below dew point and the resulting condensate is collected, cleaned in the main water treatment plant and reused as boiler make up water. This closed loop system minimises the potential release of odours, micro-organisms, bioaerosols and pathogens in any water vapour within vented air.

The airstream from the condenser/reheater unit is passed through UV odour and bioaerosol treatment (UV) prior to atmospheric release. The coolant water used in the chilled water cooler battery (condenser) is recirculated through a heat exchanger with secondary coolant water being cooled via an external cooling tower. These measures would ensure that all odours, micro-organisms and bioaerosols are removed from the air drawn through the facility prior to release.

The centrifugal fans associated with the main extraction systems are PLC controlled using variable speed drives.

Segregation

Industry standard waste segregation equipment (conveyors, magnetic/eddy current metals separation, optical separators, air density separators etc) will be used within the facility to segregate and recover the autoclaved wastes into separate recyclate streams.

Sterilised waste materials discharged from the autoclave is discharged onto a moving floor and transferred to the sorting/segregation plant by means of a conveyor plant.

The sorting and segregation plant comprises the following:

- Process Conveyor system to deliver material from the moving floor to the separation systems;
- Process separation to remove textiles;
- Trommel system to include a star screen;
- Process ferrous magnet and ferrous bailing system for removal and segregation ferrous materials;
- Process Eddie current separator and Non ferrous bailing system for removal and segregation non-ferrous materials;
- Process plastic separation (manual picking and classification);
- Fibre separation via air classification system capable of handling 15 tonnes of fibre per hour;
- Fibre drying to reduce moisture content of the fibre from 30-40% to below 10% rated at 15 tonnes of fibre per hour;
- Fibre storage system to maintain dry fibre in a storage hopper for release to the pyrolysis in feed system;
- Pyrolysis in feed conveyors capable of delivering 4 tonnes of fibre per hour to each of the 4 pyrolysis units.

The facility will be capable of producing many segregated waste streams through the steam sterilisation process, comprising glass cullet, plastic fraction, metal fragments (aluminium and steel, primarily from food packaging) and sterilised fibre.

Rejects will largely comprise stones, textiles and large wood fragments, which will be taken out of the waste stream manually (picking station).

The main output of the autoclave process is a clean sterile biofibre. The biofibre material has a very low level of moisture and correspondingly high biomass content. The biofibre is a non-hazardous 'fluffy' peat like material that is then suitable for pyrolysis. Specific details of the fibre, the content and the combustion characteristics are included within further sections of this application document.

The material handling systems shall be controlled by the central control system and will meet all required safety standards

The fibre is ejected from the trommel screen and is shown in the image below:

Fig 3.7 – Dried Biofibre Prior to Compaction

3.3.4 Zone 3: Pyrolysis and Syngas Generation

Zone 3 of the building houses the pyrolysis plant and associated ancillary equipment. The pyrolysis plant will only process sterile, stable biomass. Other than for equipment maintenance access, there is no requirement for vehicles to enter this building. All other access points are personnel doorways only.

The installation uses a proprietary pyrolysis system with a trade name of 'NOVOGAS' to pyrolyse the biomass fibre produced by the autoclave process. The system designers have specifically designed the upstream autoclave process to produce conditioned biomass feedstocks that is ideally suited to pyrolysis. Likewise, the pyrolysis process has been designed and proven to operate on the biomass fibre produced by the autoclave. The conditioned biomass and the technologies that produce it have been patented and trademarked by the system providers under the name 'Biofibe'. Biofibe is a unique biomass only product and can only be produced under the specific conditions of the upstream autoclave process.

Prior to entry into the pyrolyser the fibre is compacted into a 'log' such that it is 'air free' and thus more suited for pyrolysation, which is shown in Figure 3.8. The absence of air by the process of compaction ensures optimum process conditions. The compacted logs are approximately 0.5m long and 0.3m in diameter. The compacted 'log' is them passed into the pyrolyser via a screw gate valve. The passage of the compacted biofibe is regulated by the rotation of the retort.

Fig 3.8. – Compacted Dry Fibre Prior to Introduction into Pyrolyser

Fig 3.9. – Pyrolysis and Generator

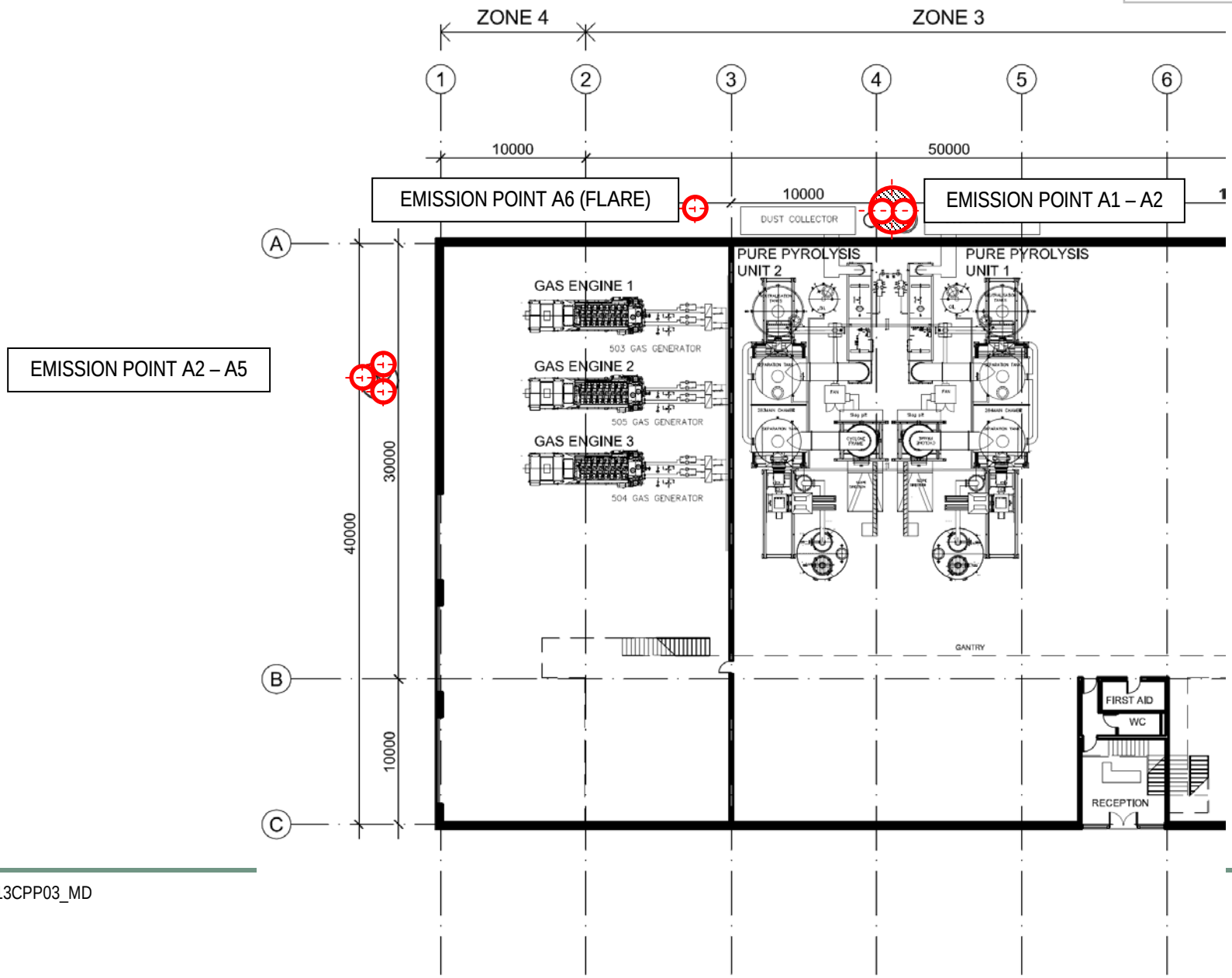

Biofibe Chemical Constituents

The autoclave and biofibe production process has been developed and refined to provide a very consistent feedstock material. Due to the upstream handling and segregation plant, the fibre feed stock is almost entirely free from contaminants and impurities, such as plastics, metals, oils and volatile content.

Independent third party chemical analysis has been carried out on innumerable samples to determine the physical characteristics, calorific value, ash content and level of impurities.

The general findings of this analysis are provided below with specific detail provided in SOL0613CPP03_MD - Volume 2: Annex B7 – End of Waste Application:

Table 3.5 Typical Fibre Chemical Analysis

Parameter	%	As received	Dry Basis	Dry Ash Free
Moisture	%	47.6	-	-
Ash Content	%	9.6	18.3	-
Volatile Matter	%	37.2	70.9	86.8
Fixed Carbon	%	5.6	10.8	13.2
Total Sulphur	%	0.08	0.12	0.15
Chlorine	%	0.43	0.83	2.85
Carbon	%	23.4	44.7	54.7
Hydrogen	%	3.00	5.72	7.00
Nitrogen	%	0.56	1.07	1.31
Oxygen	%	15.3	29.3	35.9
Gross Calorific Value	KCal/kg	2172	4145	5073
	MJ/kg	9.093	17.754	21.241
	Btu/lb	3909	7461	9132
Net Calorific Value	KCal/kg	1739	-	-
	MJ/kg	7.280	-	-
	Btu/lb	3130	-	-
Loose Bulk Density	Tonne/m^3	0.409	-	-

Table 3.6: Metals Content of Fibre

Metal	Parameter	Result
Cadmium	mgm/kgm	<0.05
Thallium	mgm/kgm	<0.05
Antimony	mgm/kgm	4.34
Lead	mgm/kgm	13.74
Chromium	mgm/kgm	32.94
Colbalt	mgm/kgm	0.74
Copper	mgm/kgm	26.72
Manganese	mgm/kgm	37.15
Nickel	mgm/kgm	7.50
Vanadium	mgm/kgm	1.90
Arsenic	mgm/kgm	0.21
Mercury	mgm/kgm	0.18

Table 3.7: Bio-Fibre Ash Analysis

Parameter	% m/m	Quantity
SiO_2	%	43.28
AL_2O_3	%	12.00
Fe_2O_3	%	2.81
TiO_2	%	0.06
Mn_3O_4	%	18.49
CaO	%	6.10
MgO	%	3.48
Na_2O	%	4.98
K_2O	%	0.09
P_2O_5	%	<0.05
SO_3	%	2.82

The analysis indicates that the fibre is largely free of contaminants and has a low concentration of toxic metals. The removal of all plastics and hydrocarbon impurities is key in the minimisation of dioxin or furan in the pyrolysis emissions. Any trace contaminants that remain in the biofibre have been found to be removed once they undergo pyrolysis and are converted to gas. Any trace metal compounds within the fibre are retained in the char.

Analysis of the fibre ash demonstrates and confirms that these residual materials are retained (Refer to SOL0613CPP03_MD Volume 2: Technical Annex B8).

A qualitative description and environmental fate analysis for all potential contaminants is provided within Table 3.8 below.

Table 3.8: Biofibe Contaminant Fate

Ref	Substance	RDF Mg/Kg	Biofibe Mg/Kg	What happens to the substance	Environmental Fate
1	Moisture (H_2O)	20-40%	5-9%	Flashes to steam in the retort	Creates a net gain in water for the scrubbing system
2	Sulphur (S)	0.1-3.0	0.9	Forms a gas in the retort and is then dissolved in scrubber liquor during the gas cooling	Water is treated and re introduced to the system
3	Mercury (Hg)	0.1-0.4	0.18	Forms a gas in the retort and is then reformed during the gas cooling	The quantities are minute and the sludge is treated and re introduced to the system
4	Thallium (Tl)	0.4-0.5	<0.05	Melts in the retort but the temperature is below its boiling point so it remains in the char	The boiling temperature of Thallium is significantly above the temperature achieved within the pyrolyser and above the temperatures achieved in the charcoal burner. All thallium is retained within the Char and subsequently encapsulated within the vitrified slag
5	Lead (Pb)	25-121	38	Melts in the retort but the temperature is below its boiling point so it remains in the char	Retained and encapsulated within the vitrified slag
6	Cobalt (Co)	6.0-12	0.74	Melts in the retort but the temperature is below its boiling point so it remains in the char	Retained and encapsulated within the vitrified slag
7	Nickel (Ni)	6.0-21	7	Melts in the retort but the temperature is below its boiling point so it remains in the char	Retained and encapsulated within the vitrified slag
8	Selenium (Se)	0.4-1.0	-	It flashes to a gas in the retort but dissolves in the gas cooling phase	Retained in scrubber liquor
9	Tellurium (Te)	0.4-1.0	-	Melts in the retort but the temperature is below its boiling point so it remains in the char	It flashes to a gas in the charcoal burner unit at the higher temperatures but is reformed to a solid when cooled in the heat recovery process, it is then captured by the ceramic filters with a 99% efficiency
10	Antimony (Sb)	9.0-10	4.34	Melts in the retort but the temperature is below its boiling point so it remains in the char	Retained and encapsulated within the vitrified slag
11	Cadmium (Cd)	0.6 - 2.2	1	Melts in the retort but the temperature is below its boiling point so it remains in the char	It flashes to a gas in the charcoal burner unit at the higher temperatures but is reformed to a solid when cooled in the heat recovery process, it is then captured by the ceramic filters with a 99% efficiency
12	Chromium (Cr)	20-140	32.94	Melts in the retort but the temperature is below its boiling point so it remains in the char	Retained and encapsulated within the vitrified slag
13	Copper (Cu)	48-98	26	Melts in the retort but the temperature is below its boiling point so it remains in the char	Retained and encapsulated within the vitrified slag

14	Manganese (Mn)	28-210	37.15	Melts in the retort but the temperature is below its boiling point so it remains in the char	Retained and encapsulated within the vitrified slag
15	Vanadium (V)	3.0-7.0	1.9	Melts in the retort but the temperature is below its boiling point so it remains in the char	Retained and encapsulated within the vitrified slag
16	Tin (Sn)	4.0-10	-	Melts in the retort but the temperature is below its boiling point so it remains in the char	Retained and encapsulated within the vitrified slag
17	Arsenic (As)	1.0-8.8	0.21	It flashes to a gas in the retort but dissolves in the gas cooling phase	It stays in the cleaning solution
18	Zinc (Zn)	225-340	105	Melts in the retort but the temperature is below its boiling point so it remains in the char	It flashes to a gas in the charcoal burner unit at the higher temperatures but is reformed to a solid when cooled in the heat recovery process, it is then captured by the ceramic filters with a 99% efficiency

Pyrolysation Process

All pyrolysation and associated equipment will take place within Zone 3 of the site building. The building has been designed to house a single pyrolysis unit containing four rotating retorts with a combined capacity of 12 tonnes of dry fibre.

The pyrolysis plant consists of a number of component parts which are described below, however the main chamber is the heart of the unit and is a refractory lined cylinder 6.5 m long and 4 m in diameter into which is placed a retort which is 5m long and 3m in diameter. The retort is mounted on bearings at each end and is manufactured from high temp steel designed for minimum temp creep and low abrasion.

Figure 3.10 below shows a simplified schematic of the pyrolysis plant.

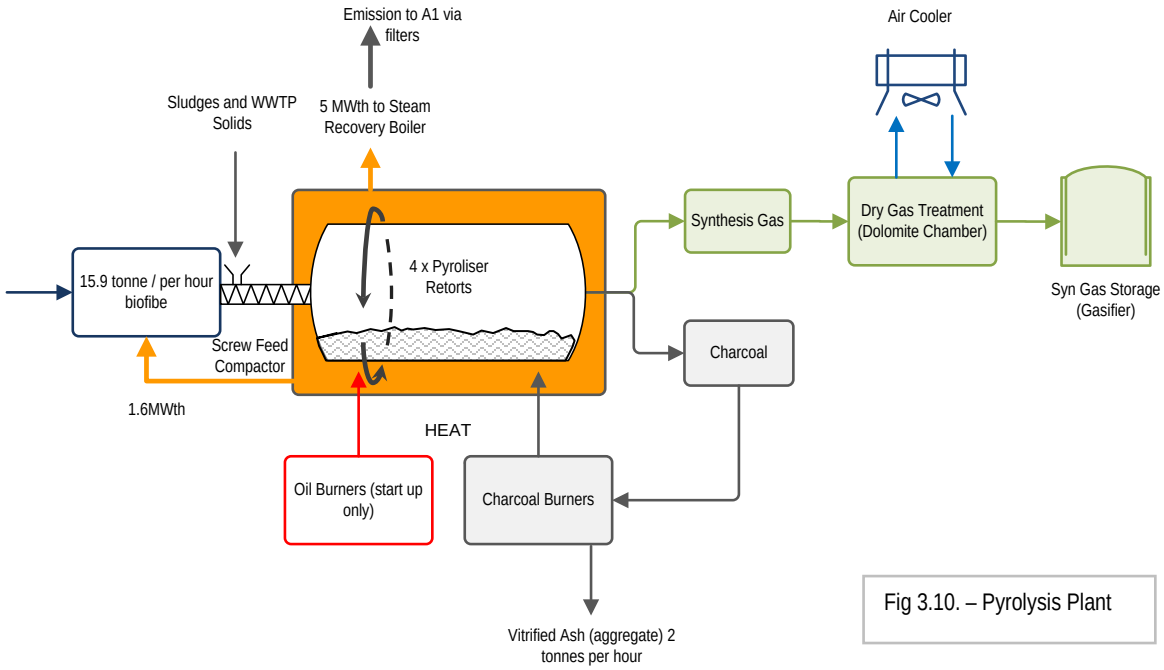

Fig 3.10. – Pyrolysis Plant

The pyrolyser has specifically been designed to have a short length (when compared with other designs of horizon retort) to ensure that the gas dwell time within the retort is minimised. The minimisation of gas dwell time reduces the formation of hydrogen in the pyrolysis gas. This design also prevents the potential of heat deformation.

The pyrolysis process and associated upstream fuel preparation processes have been designed in a manner that minimises any contaminants and ensures that all impurities are retained in the solid by products (char) of the pyrolysis stages.

The even temperatures applied to the external retort produce consistent internal temperatures which in turn create consistent gas quality. The quality of the pyrolysis gas allows it to be used in both reciprocating engines and in gas turbines. The gas produced by the retort is then cooled and further cleaned using water.

The retort is rotated by means of a 5kw chain drive. The retort is then indirectly heated by means of a solid fuel vortex burner system which provides heat with a very close temperature tolerance over the surface of the retort.

Fibre is fed in one end of the retort and charcoal is removed at the other end. Synthesis gas is formed in the retort and is evacuated for cleaning via a water cooled jacket at the same end where char is removed.

Once inside the retort, the fibre is subjected to heat in an oxygen free environment and a chemical transformation takes place which releases gas from the fibre and leaves a charcoal solid.

Figure 3.11 shows a general cutaway representation of the pyrolyser.

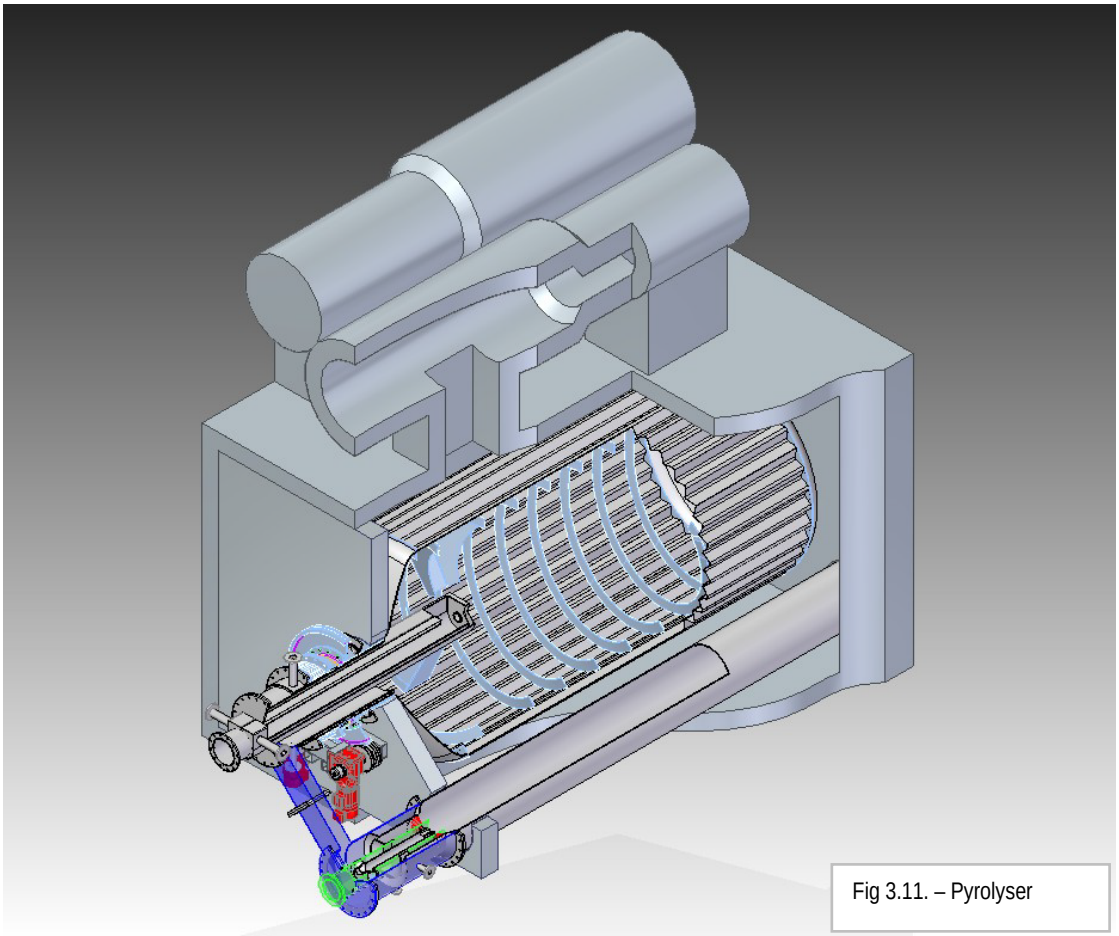

Fig 3.11. – Pyrolyser

Within the tube retort is a specific vane design that progressively advances the feedstock in an auger fashion alongside the inside of the chamber. This ensures maximum fuel residence time, uniform constant heat exposure and minimal shell stress while the fuel is converted into two products: 1) a syngas and, 2) char (charcoal) at an optimum rate.

The gas is evacuated to a cooling and cleaning system which will be required to clean 4000m³ of syngas per hour, the temperature of the syngas leaving the retort will be approximately 500°C – 550°C and will have a very low tar/oil level due to the nature of the Biofibe. Any materials present within the biofibe that has a boiling point below 500 – 550°C will volatolise into the gas. All materials with a boiling point above this figure will be retained in the pyrolysis char as a solid.

The charcoal is removed at the back end of the retort by means of a water cooled scroll system and is pulverised and stored in a hopper (store). The charcoal is then used to fuel the pyrolysation burner systems. The charcoal burner system forms the thermal oxidiser for the retort, and utilses the rejected combustion gas heat as a means of providing heat to the primary chamber to indirectly heat the retort.

The flue temperature and retention time within the thermal oxidiser and associated ducting has been designed to ensure that the minimum 850°C, 2 seconds IED requirements are achieved. The actual modeled operating temperature and retention time is provided in the CFD modeling report included within SOL0613CPP03_MD Volume 2: Annex B2 – CFD Modelling.

The charcoal burner system is a very volatile combustion environment which ensures complete combustion and oxidization of all materials within the char. The burner reaches an overall temperature of approximately 1250°C which is sufficiently high to ensure that the ash content of the char melts. Within the main burner body, ash is maintained in a molten state and then removed from the base of the vortex and cooled to a solid vitreous slag. Any materials with a boiling point below 1250°C will be retained within the slag and encapsulated.

The combustion products/gases discharged from the thermal oxidiser are routed to the primary chamber to indirectly heat the pyrolysis retort. Upon exiting the main chamber, the gases are routed to the heat recovery steam boiler where steam is generated.

Each of the heat recovery steam boilers are equipped with a feed water tank and associated ancillary equipment. Steam from the recovery units will maintain the steam load for the autoclave plant. Any excess steam is directed to a heat exchanger and condenser.

All combustion products then exit the heat recovery boiler and are passed through a ceramic filtration (HEPA) system. The filtration unit removes all particulate materials to below 5mg/m^3 prior to discharge to atmosphere via release point A1 & A2.

All emissions from the pyrolysis plant will be monitored using continuous emissions monitors (CEMS) located on the exhaust stack. Details relating to the CEMS equipment is provided within Section 5 Monitoring.

The CEMS will be Chapter 4 IED/WID compliant and monitor particulates, NOx, carbon monoxide, and VOC (through surrogate monitoring of carbon monoxide).

The continuous monitors will operate on a 24-hour basis and will include the facility for on-line monitoring of the gas concentrations.

The synthesis gas is then stored in a gas storage unit, where is it blended with the anaerobic digestion biogas and stored for the use within the gas fired engines. The operational capacity of the gas storage unit will be maintained at 80% of the maximum capacity to ensure the availability of gas storage space in the event of an emergency shutdown of the plant. The gas storage is approximately equivalent to 6 hours.

From the gas storage unit the clean pyrolysis gas is delivered to gas CHP engines. Power is generated and supplied direct to the District Network Operators 33KV substation.

The heat generated by the gas engines is utilised for drying of the biofibe by means of a heat exchange system and the rating of the exchangers are specified by the engine supplier. The four pyrolysis retorts have been designed to operate at a combined feed rate of 12 tonnes per hour.

The design of this system is highly efficient and does not require the use of natural gas or generated pyrolysis gas for the production of heat.

Gas Flare

All of the gas that is produced by the plant will be continuously monitored by an OFGEM approved Gas Chromatograph which will be monitor gas composition, temperature etc.

At any time where the gas does not meet the specification stipulated by the engine manufacturers and described in the SynGas End of Waste documentations, the gas will be diverted from the engine and into the flare.

The flare is a fully enclosed ground design and will only be used during shutdown (normal controlled shutdown and emergency shutdown) conditions, should the pyrolyser and engines be required to be shut down and gas production stopped. In this scenario, the pipelines will be purged of gas and any residual gas flared.

The flare will not be used routinely.

The flare will be designed to comply with the specific requirements of Environment Agency Landfill Gas and Anaerobic Digestion Guidance Requirements.

Gas Chemical Constituents

The syngas produced in the pyrolysis chamber is a mixture of light gases, heavier gases and condensable organics. The light gases, which comprise the main fraction, include hydrogen, carbon monoxide, carbon dioxide, methane and ethane and similar short chain hydrocarbons. The pyrolysis gas produced by fast heating comprises mainly of lighter fraction gases.

The rate at which the solid material is heated to the pyrolysis temperature is critical to the balance of product, for example.

- Fast heating = light gas fraction,
- Slow heating = heavier fraction gases and condensable organics.

The key factors that determine the maximisation of gas output are as follows;

- Feed rate
- Feed particle size
- Retort temperature
- Retort rotation speed
- Feed moisture content

Gas chemical analysis of the pyrolysis gas has been carried out and is provided within the table below:

Table 3.9: Syngas Analysis

Sample Ref:	Analysis % v/v														Calorific Value MJU.m^{-3}	
	CO_2	O_2	CO	N_2	H_2	CH_4	C_2H_6	C_3H_8	n-C_4H_{12}	n-C_5H_{12}	C_2H_4	C_3H_6	i-C_4H_{10}	i-C_5H_{12}	Net	Gross
Biofibe @702°C	25	0.42	22	1	22	15.8	1.47	0.10	<0.02	<0.02	6.75	1.12	0.36	0.09	16.44	17.9
Biofibe @707°C	25	0.47	22	1	25	14.8	1.26	0.09	<0.02	<0.02	6.23	0.98	0.35	0.09	15.77	17.2

Based on the gas analysis above, a specification has been developed for the pyrolysis gas which will be met by the process at all times during operation. This specification has been derived using the UK and EU gas safety specifications and the Risk Assessed Limits of the EA biogas injection protocols[5] of mains pressure gas, and derived to ensure that the combustion of pyrolysis gas will not lead to the releases of any greater level of pollutants than the combustion of mains gas.

The full 'End of Waste' application and associated Acceptance Letter has been included within SOL0613CPP03_MD Volume 2: Technical Annex B7.

Combustion of pyrolysis gas, in general, produces lower emissions for heat and power generation than conventional liquid and solid fuels. The composition of the pyrolysis gas strongly influences the level of emissions. Hydrogen and carbon monoxide in pyrolysis gases results in elevated combustion temperature that facilitates the thermal formation of NO and NO_2. In contrast, higher temperatures promote complete combustion and reduce the emission of organic volatiles, which are formed mainly from minor fractions of hydrocarbons in pyrolysis gases.

Particulate matter, metallic compounds and other undesired pollutants are **not present in the pyrolysis gas** as they are all removed by the gas clean up stages.

Third party gas analysis has been carried out by MCERTS approved laboratories TES Bretby and is provided within Technical Annex B7. This analysis provides the makeup of pyrolysis gas and demonstrates that the gas is free of contaminants and hydrogen sulphide. In summary:

- The upstream BioFibe conditioning processes effectively removes all potentially contaminative materials, such that oils, volatile organics, plastics and metals are not present within the source feedstocks.
- Any acid containing compounds are removed through the reaction within the dolomite chamber.
- Any compounds that have a melting point below 350ºC are removed through the filtration of the gas in the gas clean up train.
- There are no tars or oils generated by the pyrolysis of biofibe due to the lack of lignin in the fibre feedstock.
- All materials that remain solid at 700°C and below are removed in the char and then encapsulated in the vitrified ash;
- All carbon material is retained in the pyrolyser ash and burnt within charcoal burner systems.

Therefore, cleaned pyrolysis gas combusted within a gas engine will produce emissions similar with natural gas. Due to the highly consistent nature and cleanliness of the pyrolysis gas, the pyrolysis gas is considered to meet the 'end of waste' criteria established by the OSS 'end of waste' high court judgment. As such the combustion of the syngas within the gas engines is not considered to be incineration.

5 As defined by the EA Technical Advisory Group on Biomethane Injection

3.3.5 Generation

Generation of electrical power will be through the use of three gas engine CHP units6. The total electrical energy output will be approximately 12-15MWe.

All proposed engines are fitted as standard, with proprietary lean burn NOx emissions control units. These units will ensure that all NOx emissions are kept to below industry benchmarks. The engines will be fitted with additional NOx abatement technology to abate NOx emissions to a level that can be determined to have an *'Imperceptible impact'.*

All engines have been specified to be equipped with a NOx abatement plant with a maximum reduction efficiency of 95% as the site is situated within an Air Quality Management Zone (AQMZ). The extent of NOx reduction required to ensure acceptable environmental impact, whilst maintaining acceptable stack heights and impacts has been determined through air dispersion and impact modeling. This modeling is provided in SOL0613CPP03_MD Volume 2: Annex C1.

Each of the engines will exhaust to atmosphere via a dedicated release point (A3, A4 and A5).

An enclosed flare is installed for intermittent 'emergency' use during engine start up and shut down.

The technical details relating from these engines are provided in SOL0613CPP03_MD Volume 2: Annex B3 – Engine Technical Information.

The advanced conversion technology specified by Clean Power Properties Ltd at the site has been subject to an *'End* of Waste' determination by the Environment Agency, such that the combustion of Synthesis Gas is not considered Incineration.

The biomethane produced by the AD plant will be injected directly with the syngas within the gas holder and burnt within the engines.

The heat generated by the gas engines is utilised for parasitic heat requirements such as drying of the biomass fibre, pasteurisation of the anaerobic digestion, building heat etc by means of a heat exchange system.

3.3.6 Ancillary Plant and equipment design

Heat Recovery Steam Boiler

The Heat Recovery Steam Generator (HRSG) is effectively a boiler that recovers the exhaust heat energy from the pyrolysis chamber and can be utilised for steam generation. The HRSG generates steam at 17 bar, which is used to charge the steam accumulator for the autoclave unit. The capacity of the heat recovery boilers will be 5000kg p/h F&A at 100ºC.

The cooled flue gas from the boiler is then cleaned through ceramic filters for emission through the exhaust stack. An Induced Draught (ID) fan drives this gas cycle from the thermal oxidiser to the stack through the retort. An air-cooled cooling plant is installed for the gas engine cooling.

6 These engines are operated in an N+1 configurations (i.e. only two engines will be operated at any one time)

The ID fan controls the critical hot gas flow rate through the retort. The fan is driven by variable speed motors controlled by the char, thermal oxidiser and retort temperature control loop.

Dry Gas Cleaning Plant

The synthesis gas produced by the pyrolysis retort when processing BioFibe is essentially clean. Unlike other biomass mass materials (especially wood based biomass) very little, if any, pyrolysis oils and tars are produced. Due to the upstream conditioning of the BioFibe, no plastics, volatiles or oils are present within the feedstock. As such, little in the way of further contaminant removal is required.

The clean up stages utilised by the process are as follows:

- Passing through a Dolomite Chamber (essentially a packed reactor filled with an alkaline reagent to neutralise any acid containing compounds);
- Ceramic Filtration – to remove any fine particulate / solid phase contaminants;
- Gas cooling / Quenching

All gas produced by the pyrolysis plant has been designed to meet with the stringent requirements of the Gas Engines (end users) of the fuel.

Gas contaminants in the pyrolysis gas are mostly solid phase or mildly acid compounds which are easily removed through the conventional gas cleaning technologies. Accordingly, the resultant gas is clean and suitable for use within a range of industrial uses.

Due to the very low levels of tar production in gas generated from Biofibe (cellulose fibre) the use of calcinated dolomite as the primary cleaning catalyst provides a number of advantages over water based scrubbing.

On exiting the dolomite reactor the gas is passed through a ceramic filter bank and then cooled prior to storage and use in the gas engines.

More specifically, due to the cleanliness of the gas, it can be reliably produced in accordance to a specification that is suitable for combustion with commercial CHP gas engines and able to meet the definition of *'End of Waste'.*

The cooling plant is a standard air blast chiller unit that is designed to rapidly cool the gas from around 450ºC to 60ºC. This cooling prevents the de-novo formation of dioxin. Any moisture in the gas will be condensed and removed.

Pyrolysation Combustion Products Abatement Plant

Sorbant Injection

The pyrolysis plant has been designed with a small scale packed sorbent injection system, that operates using Dry Hydrated Lime Injection. The plant is a proprietary unit and will be supplied as standard as part of the char combustion burner system. Due to the very low levels of acid gas associated with the combustion of the char, very low usage of hydrated lime will be used.

A common system comprising two small scale lime hoppers (nominally 5 tonnes each) will be located within '*Zone 3'* of the plant building and will supply all char combustion units associated with the plant. The system will

inject directly into the common flue duct on the upstream side of the heat recovery steam generator and ceramic filtration plant.

All lime injected into the system will be captured within the ceramic filtration plant.

A generic system layout is provided in the figure below, with the full system detail provided in Volume 2 - Annex B5 of this document.

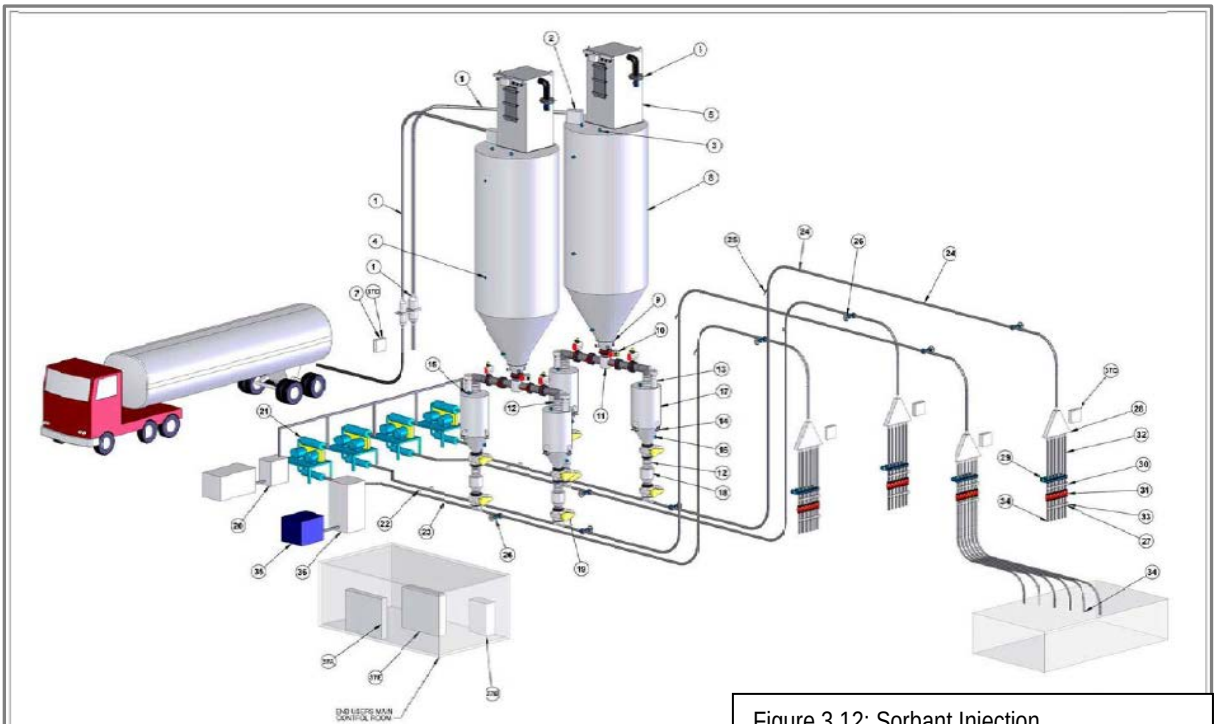

Figure 3.12: Sorbant Injection

Baghouse Plant

A ceramic filter system has been specified for particulate removal. The units have been sized at a filtration velocity of between 1.5 and 3.0 cm/s i.e. the speed that the gas is conveyed to the filtration elements.

The baghouse system comprise two separate units each handling approximately 50% of the combustion products from the pyrolysis combustion system.

The filter plant will enable an extremely high particulate reduction of nearly 100% and will allow particulate emissions to be significantly below 5 Nmg/m^3 which is well within the IED limits and will typically achieve below 1 Nmg/m^3.

Each plant is fitted with a multi-Cell filter head design (5 banks of 80 elements) which will prevent cross contamination within the head of the pod. The aspects of the design ensures that maintenance can be carried out whilst the plant is still operational.

Selective Catalytic Reduction (NOx)

Selective Catalytic NOx Reduction will be installed on both the Gas CHP Engines and the Pyrolysation plant.

The SCR system uses urea (or aqueous ammonia) and can typically achieve NOx reductions of 90 – 95% for gas engines. The reducing agent used for the reaction is urea, which can be transported and stored safely and easily in local self contained IBC vessels or tanks.

Urea is colourless, odourless, nontoxic and bio-friendly and is preferable over the use of hydrous or anhydrous ammonia.

The NOx reduction reaction takes place as the gases pass through the catalyst chamber. Before entering the catalyst chamber the urea is injected and mixed with the gases.

For NOx abatement to be fitted to the pyrolysation plant, an adjustment to the pyrolyser flue gas temperature via the use of a partial HRSG boiler bypass is required. A pyrolyser flue gas temperature of 300°C is considered a good compromise for this.

Gas Engine Combustion Products Abatement Plant

Due to the cleanliness of the syngas, no abatement beyond NOx abatement is required. Each Engine is fitted with SNCR accordingly.

3.3.7 Anaerobic Digestion

The AD plant will utilise a dedicated sealed reception bay within the common reception building. The AD reception bay will comprise a reception pit and feed hopper. All solid biodegradable wastes will be macerated, separated and blended to produce the feedstock for the AD tanks.

The AD Plant will generically comprise the following:

- Feedstock blending systems and associated pumps / pipelines;
- Batch pasteurisation equipment;
- 2 x Bunded Digestion Tanks;
- 2 x Gas Storage Tanks; and
- Gas Treatment and Odour Abatement Plant.

Once waste has been stored in the waste reception, all materials are then transferred by transfer system to the blending tanks and into the pasteurisation tanks for sterilisation.

Figure 3.11 overleaf shows a simplified diagram of the anaerobic digestion process.

Fig 3.11 – Simplified Process Schematic of Anaerobic Digestion Process

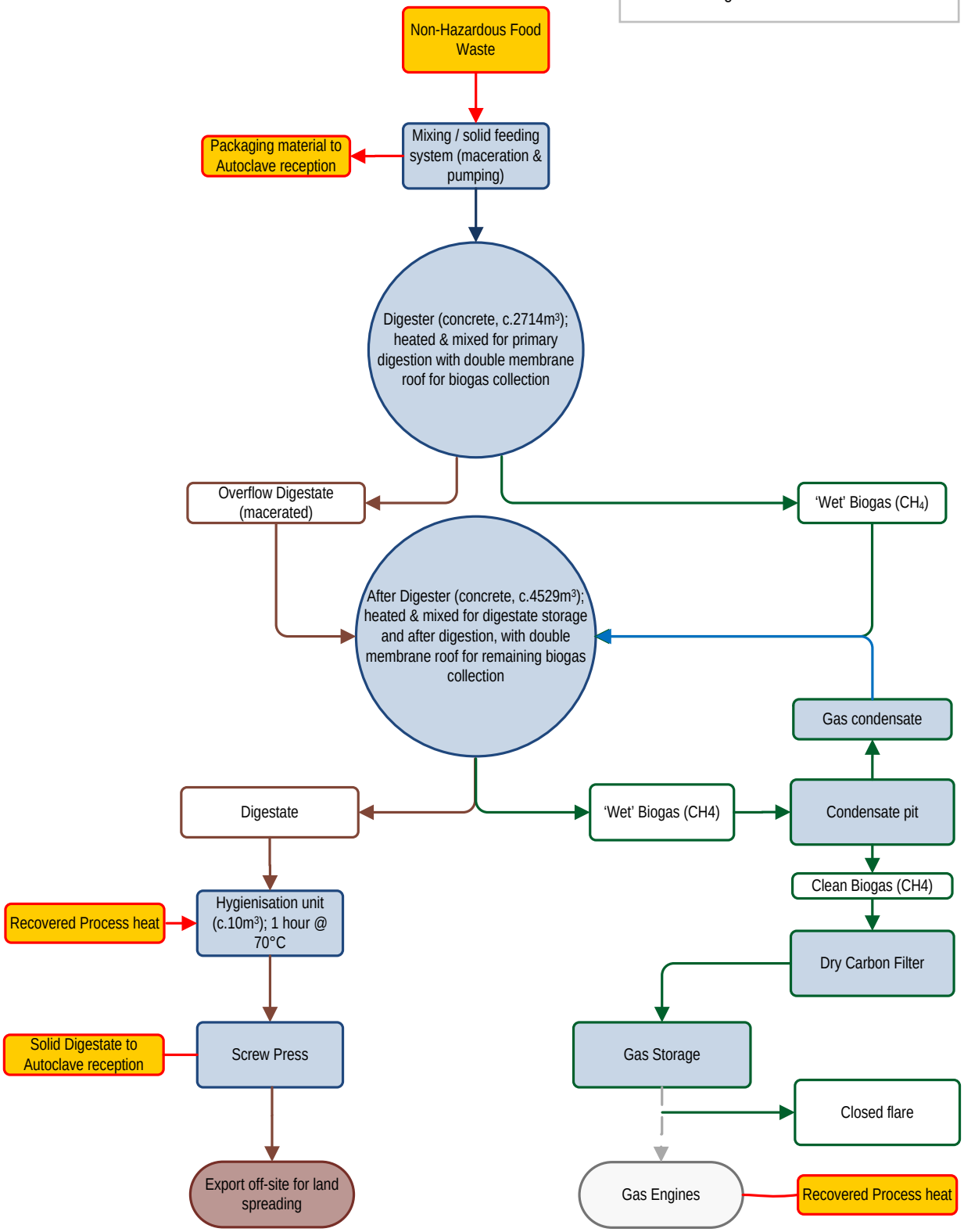

All solid materials will be delivered to the external inlet hopper of a 40 m3 capacity material transfer located in the delivery bay of the main waste building. The hoppers are located externally, thus allowing the transfer of material directly into the digestion tanks via a closed conveyor system. Each hopper has been designed with a splash shield to prevent material "overshooting" the edge of the bins and ending up on the bottom of the pit. The entry hopper is provided with a stainless steel lid, which will be opened and closed hydraulically prior to and after loading.

The concrete digester tanks are insulated and heated with a heating system installed inside the walls and base. The tanks have an extracted double membrane roof, to ensure stability and flexible gas storage. Both digester tanks can be fed directly from the polyester silos and pre-treatment unit.

Inside each tank two propeller (5.5 kWe) mixers will be installed. This will ensure a homogeneous mixture for mass transfer and to prevent floating layers or sedimentation. The presence of this equipment allows for high organic loads (average is 8kg organic dry matter/m³/digester/day) and therefore can achieve high biogas production per m³ digester volume.

Table 3:10: Primary Digestion Tanks Specification

Parameter	Specification
Quantity:	2
Volume (gross):	2,945 m³
Dimensions:	25m x 6m
Material:	Concrete
Roof:	Double membrane with integrated gas storage (extracted to Odour Control Plant)
Insulation:	Wall and floor 60 mm, with sheet piling
Heating:	Heating Elements installed inside tank or in tank base
Mixers:	2 propeller mixers (5.5 kWe) in each tank

The digester will be equipped with an extracted air blown cover with gas storage capacity. The storage capacity is placed to reduce fluctuations in gas quality and pressure.

The double membrane roofs, above the digester tanks, ensure stability and flexible gas storage.

Table 3:11 : Secondary Digestion Tanks Specification

Parameter	Specification
Number::	2
Type	Double membrane with integrated gas storage
Material	Concrete
Volume (gross)	4241 m³
Dimensions (dia x height)	30m x 6m
Process Pressure	0 – 5 mBar
Maximum Pressure	10 mBar

The AD tanks have been fitted with two chemical dosing systems for the reduction of H_2S in the biogas. The primary system injects a small quantity of O_2 into the gas storage region of the tank (i.e. headspace beneath the membrane roofs). If oxygen injection is not sufficient to reduce the levels, Ferric Sulphate will be dosed directly into the digester.

Figure 3:12: Anaerobic Digestion Tanks Showing 2 Primary Digestion Tanks.

Pasteurisation

All digestate will be batch pastuerised at 70°C for 1 hour and input temperature of the digestate will be approximately 47°C. The two pastuerisation tanks are indirectly heated using waste heat from the CHP plant water jacket. The batch pastuerisation tanks are located within the main building adjacent to the water treatment plant.

The pastuerisation tanks have been fitted with a proprietary scraping and impellor system which removes and prevents the build up of congealed material on the tank walls and ensures a homogeneous blend within the tank.

Table 3:12: Sanitisation Tanks Specification

Parameter	Specification
Temperature:	70°C
Time	min. 1 hour
Quantity:	2
Volume :	10 m³
Diameter:	2.00 m
Height	3.25 m
Material	Stainless Steel (SS 316)
Mixer	1 mixer to keep the material homogeneous (0.75 kWe)
Scraper / Mixer:	1 mixer with scraper
Insulation:	100 mm thick (rock wool)

Gas Clean Up and Conditioning

The biogas produced in the digesters will be saturated with water. Prior to combustion within the CHP plant it is necessary to remove any condensate and to fully dewater the gas.

Dewatering is achieved by cooling the biogas in an underground gas pipe and condensing out any liquid content. The produced condensate will be collected by condensation wells and pumped back to the digester tanks.

The dry gas will then be recirculated through a dry carbon filter for the purposes of removing any residual odourous gases (Hydrogen Sulphate, Ammonia) or other volatile odourous content and pumped to the gasometer.

It is intended that all solid digestate produced by the AD plant is reprocessed through the autoclave units. All liquid digestate will be transported off site for disposal / reuse as fertilisers or similar.

All pre and post digestion processing activities are carried out within Zone 2 or 3 of the main building. Adequate space provision within the building has been allowed for this.

3.3.8 Site Management & Operations

Maintenance

All maintenance activities on site will be carried out in accordance to the manufacturers' recommendations and will be integrated within the company's environmental management system.

The key aspects of the maintenance management programme will include:

- Infrastructure inspection: A programme of inspection of all bunded areas and concrete storage pads;
- A programme of Planned Preventative Maintenance (PPM) on key plant and equipment to ensure ongoing management. This programme also will ensure critical components such as belts and motors are replaced early rather than waiting for equipment to fail.
- The inspection and maintenance schedules that the manufacturer recommends are adhered to, including any period of recommended shut-down.
- Maintenance and calibration of all company laboratory and testing equipment to ensure compliance with Quality Control / UKAS requirements.

The sites maintenance programme will ensure that all equipment or infrastructure that is deemed essential in the prevention of pollution to the environment (e.g. hard-standing, bunds etc.) or the prevention of local nuisance impacts (e.g noise abatement equipment etc) is maintained and kept in good operating condition.

It is proposed that all maintenance activities will be carried out under contract by a suitably qualified and competent third party organisation.

Instrumentation and Control

The manufactures of the plant have incorporated best practice design principles in terms of instrumentation and process control. The selection of instrumentation is such that plant operating parameters, monitoring and safety features can be seen clearly on the operators control panels.

The entire plant has been designed to operate using a SCADA system and will be manned on a 24 hour / 7 days a week basis.

Selected examples of the types of process control engineering that have been implemented are as follows;

Autoclaves and Feed Systems;

- Load sensors on push floor systems and loading systems.
- Pressure and temperature sensors within the autoclave units.
- Interlocks on building door opening and extraction systems.
- Interlocks and controls on autoclave door and extraction systems.

Fuel Feed to Pyrolysis Chamber;

- TV monitoring of fuel feed.
- Position switches on fuel compactor gate valves.
- Full monitoring of positions of fuel compactor hydraulic system.
- Each of the compactor hydraulic systems can be operated individually to allow slower throughputs to system.
- Input scroll Variable Speed Drive (VSD) monitoring with feedback to control system, monitoring of both frequency inverter and shaft speed.
- Pyrolysis chamber maintained under slightly positive pressure. The pressure in the pyrolysis and downstream is continuously monitored and alarmed by SIL assessed loop.
- Low fuel alarms and lockout of rams on feed system.
- Feedback on bridge breakers to control system.
- Interlocks and monitoring on feed system.
- Oxygen monitoring and nitrogen inerting on pyrolysis chamber.

Pyrolysis Chamber, Discharge Scroll and Char Hopper;

- Level in char hopper and outlet valves forms a gas seal.
- Pressure switch and temperature monitoring on chamber.
- Rotational sensors on extract scroll.
- Retort temperature limited when operating on plastic feed.
- System has a temperature control loop linked to thermal oxidiser.
- Temperature monitored in char hopper.
- Combustion control loop responds to change in product throughput.
- VSD's on scrolls.
- Three level sensors in hopper. Scroll operates at mid-range and has in-built programme for adjusting its speed based on feed rate.
- Hopper low-level switch is failsafe to shut the system down.

Thermal Oxidiser;

- Minimum temperature in thermal oxidiser set at 850°C based on the char having less than 1% halogenated organic substances.
- Temperature measurement at top of thermal oxidiser, surface temperature of the retort and at inlet to heat recovery system.
- Level control in char hopper.
- Feedback on thermal balance on system.
- Oxygen monitoring and control.
- Automatic shutdown on loss of temperature.
- Air flow to the char burners is monitored by mass flow meter with thermal dispersion.
- Pressure monitored in thermal oxidiser chamber.
- Negative pressure maintained in thermal oxidiser with pressure alarm and shutdown.
- Loss of water seal will cause excess air and system will alarm and shutdown.
- Temperature alarm with auto-shutdown.

Heat Recovery;

- Pressure drop is monitored with feedback.
- System will shut down, as ID fan will not be able to maintain combustion chamber temperature.
- Pressure monitoring on either side of filters controls pulsing. Replicated on each module.
- Differential pressure monitoring on each filter highlights excessive flow condition.
- Customer supplied CEMS will monitor dust levels in downstream gas.
- Temperature monitoring of outlet of heat recovery system.
- Temperature monitoring in acoustic enclosures.

Gas Washing;

- Gas booster fans on minimum speed with nitrogen injection.
- Temperature is monitored on inlet to venturi and on top of gas wash chamber. Alarm and shutdown on outlet temperature from gas wash chamber.
- Flow switch alarm and shutdown on HP water supply.
- Low flow reading on any flow switch will put system into shutdown.
- Differential pressure monitored between gas wash and exit of second scrubber tower.
- Temperature and flow monitoring.
- Two independent switches with individual alarms with high-level alarm linked to auto-shutdown.
- Monitoring of gas dump valve with feedback to shut retort inlet scroll.
- Oxygen monitoring of gas just before flare and gas engine.
- Pressure control on the gas booster fans and the gas dump valve.
- Differential pressure across scrubber is measured with alarm.
- Water level will rise, trip system and auto-shutdown.
- Temperature monitoring and shutdown on exit of gas wash chamber.

Gas Boosting and Flare;

- Differential pressure measurement across carbon filters.

- Gas detector and shutdown on any potential gas booster fan leak.
- Auto-divert to flare by auto-divert valve and pressure relief valve should gas engine trip.
- The client engine package will include a gas analyser.

Anaerobic Digestion Tanks

- Load sensors on loading hoppers
- Pressure, temperature sensors within the AD tanks.
- Gas environment sensors (Oxygen, Nitrogen, Methane, Hydrogen Sulphide etc);
- Interlocks and controls on all feeding systems.

Operator Competence

The facility will be fully automated to the point that all process activities will be PLC controlled and SCADA monitored. The installation will have on-line monitoring which can be administered remotely to ensure the process is optimised and operating correctly.

Notwithstanding the above, the site will be staffed during daytime operations. The primary role of day staff is to ensure and oversee plant loading operations, fuel transfers and recyclate management.

Additional activities will include general site housekeeping and administration activities. Additional staff attending the site will be visiting engineers from the equipment manufacturers who are adequately trained to perform their duties at the site. The site will maintain written operation instructions all for the plant and monitoring equipment present on site.

All personnel working at the facility will be trained in the necessary sections of the Working Plan and associated Procedures.

All staff working for and on the behalf of the site, will be suitably trained and competent (e.g. professional maintenance engineers, electricians, equipment operators etc).

The operator will employ on a full time basis a site manager / technically competent person who holds the necessary WAMITAB CoTC Level 4 qualifications as required by the WAMITAB / EA Operator Competency Scheme. This person will be recruited and employed prior to the construction and handover of the plant. All plant commissioning activities will be overseen by technically competent contractors and sub-contractors as deemed necessary.

No operations (pre-operational or otherwise) that involve the acceptance, handling or processing of any wastes will take place without a technically competent person being employed by the Operator.

Operational Times

The site will be operated on a continuous 24/7 basis with deliveries, loading and unloading operations generally (but not restricted to) being carried out in accordance to the schedule below:

- Monday – Friday: 7.00 – 19.00;
- Saturday: 7.00 – 19.00;
- Sunday: No deliveries or collections; and
- Bank Holidays: No deliveries or collections.

Additional activities will include general site housekeeping and administration activities. The site will maintain written operation instructions all for the plant and monitoring equipment present on site.

All personnel working at the facility will be trained in the necessary sections of the Working Plan and associated Procedures.

Environmental Management & Working Plan

Clean Power (UK) Ltd will operate in accordance with corporate standards and procedures as part of a wider Environmental Management System. The system will be designed to meet the requirements of ISO14001:2004.

All aspects of the operation will be managed in accordance within a formal Environmental Management and Quality Plan. The plan will define all activities throughout the lifecycle of the treatment process (i.e. pre-acceptance, acceptance, autoclaving and anaerobic digestion).

The Environmental and Quality Management system will be designed to meet the requirements of the Environmental Permitting Regulations and associated pollution prevention guidance.

The EMS has been designed to ensure:

- The identification of all foreseeable environmental impacts and risks that Crapper & Sons activities pose to the environment.
- Prevention or minimisation of any identified risks to practical minimum.
- Legal Compliance assurance.
- Activities at the site will be managed in accordance with the management system, which will be subject to continuous review, audit and improvement. Specific detailed management system reviews will take place if there is a significant change to the activities, following an accident or if a non compliance is found.
- Furthermore, the whole management system will be subject to annual external audit by competent third parties.
- The key aspects of the EMS for the site will include:
  - Preventative maintenance;
  - Operator requirements;
  - Training and competence;
  - Emergency response and incident management;
  - Monitoring, measurement and reporting.

The environmental management system and procedures will be written to ensure that the environmental risks and impact of the normal running of the site activities are documented and minimised.

The system will be fully developed, implemented and operation at the time of plant commissioning and the permit entering into 'Normal Operations'.

Working Plan

The site has developed a working plan for the operation of the site. This working plan defines the management of the site and provides the management controls for all aspects of the site. The basic structure of the operational procedures have been designed around the best practice requirements of the EPR S5.01 and S5.06 Guidance notes.

Table 3:13 shows the structure of the proposed working plan.

Table 3:13 Working Plan

Ref No:	Title	Purpose
CPP-E01	Waste Pre-Acceptance	This procedure defines the upstream screening, checking and pre-acceptance of all incoming waste prior to its arrival on site.
CPP-E02	Waste Acceptance	This procedure outlines the onsite controls and considerations that need to be applied when waste materials arrive on site for processing.
CPP-E03	Waste Rejection	This procedure outlines the waste rejection process for all non-conforming wastes that cannot be processed on site. Acceptance of non-conforming wastes will be a direct breach of the permitted conditions of the sites Environmental Permit.
CPP-E04	Off Site Waste Transfers	This procedure provides the necessary information to enable the assessment and off site transfer of non-conforming or untreatable waste streams.
CPP-E05	Waste Reception and preparation	This procedure outlines the waste reception, storage and autoclave/anaerobic digestion loading processes for all incoming waste.
CPP-E06	Autoclaving	This procedure defines the processes and stages of the autoclave process.
CPP-E07	Recyclate Management	This procedure defines the recyclate management and control process.
CPP-E08	Pyrolysation	This procedure defines the stages and control measures for the pyrolysation syngas generation process.
CPP-E09	Slag and Ash Management	This procedure defines the condensate management and control process.
CPP-E10	Anaerobic Digestion	This procedure defines the stages and control measures for the anaerobic digestion process.
CPP-E11	Digestate Management	This procedure defines the digestate management and control process.
CPP-E12	Engine Management, Engineering and Controls	Procedure that outlines the required monitoring and analysis requirements for the operation of the gas engine generation sets, pasteurisation and digestion stages
CPP-E13	Environmental Records	This procedure defines the necessary Environmental Permit and Waste Records that are required to be managed by the site to ensure compliance.
CPP-E14	Environmental Monitoring Programme	This procedure provides an overview of all of the necessary environmental monitoring procedures and controls to ensure compliance with the Permit
CPP-E15	Infrastructure Monitoring and Cleaning Programme	This procedure provides an outline of the inspection and cleaning requirements for the site.
CPP-E16	Accident Management Plan	This procedures refers to the sites emergency plans and response requirements

CPP-E17	Odour Management Plan	This document outlines the sites Odour Management Plan and requirements
CPP-E18	Training	To ensure that all training needs are identified for a relevant personnel. In addition, educational and training qualifications and records are maintained.
CPP-E19	Security	To ensure that all site and driver security controls are implemented and maintained to minimise security risks.
CPP-E20	Emergency Procedures	To ensure the safe evacuation of the site and protection of the environment in the event of a site emergency.

The working plan will be fully developed prior to the new operations commencing at site.

Suggested Pre-Operation Condition 1

The operator shall submit a detailed site working plan that incorporates all aspects of the proposed installation to the satisfaction of the Agency, prior to the commencement of operations of the new facility.

This working plan shall form part of a wider formal Environmental Management System that meets with recognised best practice for the sector.

Site Security

The site will consist of relevant security measures including:

- A perimeter fence which will be inspected periodically to ensure that the site security has not been compromised;
- A gatehouse controlling the sole access point to the installation. This gatehouse will be manned from 08:00hrs until 18:00hrs during site operation and which is alarmed and monitored between 18:00 – 08:00hrs;
- CCTV monitoring of the external and internal areas of the Installation;
- External on-line monitoring and administration of the waste-to-energy process from a remote location;
- Heavy duty roller shutter doors for overnight site security; and
- All personnel and vehicles entering the site are strictly controlled and managed; no vehicles or personnel will be allowed access to the facility without prior authorisation.

A copy of the site security plan will be sorted at the Gatehouse.

Accidents and Emergencies

The site has developed an Accident Management Plan based around the specific risks associated with the site operations.

The key aspects of the Sites Accident Management Plan are:

- Reviewed by Site Management annually and as soon as practicable after an accident.
- Considers hazards presented by emergency shut-down procedures.
  - actions in case of fire/explosion;
  - contaminated firewater;
  - failure of any equipment;
  - spillages and uncontrolled releases;
  - plant or equipment failure

- vandalism;
- flooding.

- Identifies events or failures that could damage the environment.
- Assesses the likelihood and the potential environmental consequences from accidents at the site.
- Proposes action to minimise the potential causes and consequences of accidents.

Specific emergency response procedures will be developed by the operator in conjunction with the plant manufacturer, local fire offices and the company's Site Manager.

These procedures will be complete and fully developed and implemented prior to operations commencing at the site.

The draft Accident Management Plan is provided in Annex D3.

Suggested Pre-Operation Condition 2

The operator shall submit a detailed emergency plan to the satisfaction of the Agency, prior to the commencement of operations of the new facility.

Incident Reporting

The reporting of Incidents and non-conformities will form a key component of the companies Working Plan / Management System. Identified non-conformities under the system include, but are not limited to the following:

- Uncontrolled leaks and spillages of any materials with the potential to cause pollution to the environment (chemicals, hydraulic fluid, oils);
- Non compliance to any permitted condition or consent limit (missing of reporting deadlines, breach of any permitted consent limits;
- Internal Audit findings (legal non-compliances, EMS procedural breaches, system non-compliances);
- External and Internal Complaints; and
- Whenever a plant malfunction, breakdown or failure, or any near miss occurs.

The company's EMS will undergo periodic external audit and review to ensure that both compliance and continuous improvement is achieved. The EMS requires that all identified incidents and non conformities will be investigated and closed out.

Furthermore, the site management system will have documented procedures and registers to:

- Ensure that any members of the public/residents are alerted and informed if a significant plant issue arises (fire, explosion etc);
- Record, report and investigate any internal or external complaints to ensure that any necessary measures are taken to prevent, or where that is not possible to minimise, the causes; and
- Inform any members of the public about the nature of the site, key contacts and sources of further information.

4 EMISSIONS & THEIR ABATEMENT

4.1 Emissions to air

4.1.1 Point-source Emissions to Air

All point source emissions from the plant are detailed in the table below.

This table provides details of the predicted emissions parameters, concentrations and source. All emissions concentrations will be in line with those ELV's specified in the Industrial Emissions Directive (IED) as shown in Table 4.1 below.

Table 4.1: Emissions from the site

Emission point	Parameter	EID ELV	Unit	Source	Comment
A1	PM_{10}	<10	mgm^{-3}	Pyrolysis Units 1, 2, 3 and 4	Emissions should be significantly below indicated (former WID) IED limits however WID will apply to Pyrolyser emissions.
	VOC	<10	mgm^{-3}		
	HCl	<10	mgm^{-3}		
	HFl	1	mgm^{-3}		
	CO	<50	mgm^{-3}		
	SO_2	<50	mgm^{-3}		
	NOx	<200	mgm^{-3}		
	NO	-	mgm^{-3}		
	NH_3	-	mgm^{-3}		
	Toxic Metals Total	<0.5	mgm^{-3}		
	Dioxin and Furans	0.1	ng		
A2, A3, A4	PM_{10}	<10	mgm^{-3}	Gas Engines 1-3	All engines are fitted with NOx reduction technology to ensure compliance with BAT. All engine emission points will release to atmosphere through dedicated emission points.
	CO	<50	mgm^{-3}		
	NOx	<250	mgm^{-3}		

The figures below assume that 95% reduction in NOx emissions is achieved. This figure shows the maximum feasible reduction efficiency of commercially available SCR plants.

The characteristics of the emissions from each of the atmospheric release points are as follows:

Table 4.2: Stack Attributes (Mass emission figures)

Source ID	A1 & A2	A3-A6
Description	Pyrolysers (4 units combined)	Gas Engine 1-3 (With SCR)
Stack Height (m)	Dependant on AQMS (~25 agl)	Dependant on AQMS (~25m agl)
Stack diameter (m)	1.2 (a)	1.0
Temperature of release (°C)	300	385
Actual flow rate (Am^3/s)	5.25	20.6
Emission velocity at stack exit (m/s)	17.2	26.2
Normalised flow rate (Nm^3/s) (a) per unit	1.53	8.5
Mass release g/s		
PM_{10}	0.01525	-
TOC	0.01525	-
HCl	0.01525	-
HF	0.001525	-
CO^3	0.07675	0.64 (6.4)
SOx	0.07675	-
NOx	0.015375	0.105
Dioxins and Furans	1.53×10^{-10}	-

(a) Effective stack diameter – four 0.60m stacks within one wind shield
(b) A1 – A2 Emission rates per stack

Abatement Technologies (dioxins/furan)

The entire plant concept and theology has been designed around the recovery of biomass (BioFibeTM) from mixed waste feedstocks. BioFibe is a high purity biomass fuel produced by VTT's proprietary autoclave waste treatment technology. The conditioned biomass produced by the autoclave has been proven to be of high purity and composed predominantly of organic cellulose fibre and non-reactive minerals. This material when pyrolysed produces a high carbon biochar (VCharTM) which is directly comparable to commercially available solid fuels and industrial carbon feedstocks.

Neither the BioFibeTM of the subsequent VCharTM that is produced contains volatile organic compounds, long chain aromatic compounds, chlorinated compounds, plastics or oils. Due to the highly conditioned nature of the BioFibeTM [i.e. the fibre is almost entirely devoid of lignin] and hence no long chain aromatic compounds (pyrolysis tars and oils) are created during the pyrolysis process.

Furthermore, the pyrolysis of this material [i.e. without the presence of oxygen] does not give rise to the formation of dioxin compounds within the syngas. The subsequent rapid quenching of the syngas post pyrolysis ensures that the de-nova synthesis of dioxins does not take place. The combustion characteristics of the synthesis gas will be very similar to that of natural gas, no dioxins will be produced.

The VCharTM material itself is a high coking char species that does not contain any chlorinated compounds and is fully combusted at high temperatures within the thermal oxidiser. Although these two measures alone would [in conventional combustion systems] be sufficient to ensure that the formation of dioxin will not take place, the subsequent injection of hydrated lime, rapid cooling of the flue gas through the heat recovery steam generator and the subsequent filtration through high efficiency ceramic filters guarantees that dioxin will not be released.

This configuration of technology is recognised as meeting BAT in most combustion applications and combined with the overall plant concept and theology successfully mitigates and abates any dioxin formation from the process.

A full commissioning and acceptance programme will be carried out with the operator and the technology supplier as part of the plant installation and handover. The exact nature of the commissioning programme is yet unknown, however it will be structured around the needs of both the permit and the plant operator.

All aspects of the commissioning programme will be agreed with the Agency as part of a pre-operational condition and will be used to demonstrate that the technology can produce a clean synthesis gas and thus meet the Annex 4 definitions of the revised Waste Framework Directive of Fully Recovered.

This programme will be devised by the installation contractor in conjunction with the operator and agreed with the Agency as part a pre-operation condition.

Suggested Pre-Operation Condition 3

The Operator shall submit a detailed commissioning programme to the satisfaction of the Agency, prior to the commencement of operations, which details the commissioning process, the programme and the measures that will be employed to demonstrate the rWFD Annex 4 definitions (of fully recovered) will be achieved.

Suggested Pre-Operation Condition 4

Upon acceptance by the Environment Agency, the Operator shall embark and complete the agreed Commissioning Programme to the satisfaction of the Agency. Prior to being permitted into entering into Normal Operations the operator shall submit a detailed report that provides all necessary information to allow the Environment Agency to evaluate the gas cleanliness and char and to be able to determine a position on the ability for the syngas to meet the accepted 'End of Waste' definitions.

Suggested Improvement Condition 5

Following commissioning of normal operations, of the plant, the Operator shall supply a commissioning report recording performance against the plan submitted with the application for commissioning and in accordance with pre-operational measures.

The report shall include but not be limited to:

- *Details of any modifications made to the process during commissioning that change the details included in the application.*
- *A full record of emissions from the installation during commissioning. Where emissions exceed stated limits, the reasons for this will be stated, justified and include details of actions taken to correct the exceedances.*
- *A report that clearly demonstrates that Dioxins / Furan emissions from the plant is below detection limits. Should the report indicate that dioxins are present in the plant emissions a formal assessment of these emissions will be made to demonstrate that there is no adverse impact to the environment or to human health.*
- *An assessment of the actual practical maximum throughput at the facility compared to the design rate submitted as part of the application, and details of anything which limits throughput at the facility.*
- *A report detailing any abnormal waste generated as a result of the process and not listed as part of the submitted application.*
- *A report demonstrating that the plant meets the specifications and performance indicated in the 'End of Waste' application submission.*

4.2 Emissions to water

The plant has been designed to reuse and recycle all water produced by the plant. All waste water arising from the plant will be treated through the water treatment plant and reintroduced into the autoclave.

All rainwater runoff arising from the plant will be harvested and utilised for steam generation and cleaning etc.

The size and capacity of the rainwater harvesting tank can be influenced by and incorporated into the SUDs design for the facility.

Any discharges from the water treatment plant (i.e. RO blowdown) unit will be used to provide grey water for process wash down, floor cleaning, vehicle wash etc.

All discharges to controlled waters will be stormwater run off only. Therefore reference to all releases meeting the Urban Waste Water Treatment Directive BAT release levels has been made:

Table 4.3 Emissions to Controlled Water W1

Parameter	Concentration	Reference Method
Biochemical oxygen demand (BOD_5 at 20°C without nitrification	25mg/l	Homogenised, unfiltered, undecanted sample. Determination of dissolved oxygen before and after five day incubation at 20° ±1°C, in complete darkness. Addition of a nitrification inhibitor
Chemcial Oxygen Demand (COD)	125mg/l	Homogenised, unfiltered, undecanted sample Potassium dichromate

4.3 Emissions to Sewer

With the exception of domestic sanitary effluents there will be no emissions to sewer arising from the facility.

4.4 Emissions to Land

There will be no emissions to land arising from the installation.

4.5 Odour

Odour management and mitigation is a key issue for the Installation and has formed part of the primary design parameters of the plant. The Installation has been designed with a hierarchy of odour control and abatement measures to ensure that the potential for odour impacts is minimised.

An overview of the measures has been provided in Table 4.4 below and is in provided in detail within the Odour Management Plan (SOL0613CPP03_MD Volume 2: Annex D2).

Table 4.4 Odour Management Summary

Tier	Reference	Description
1	Inventory control	The Installation has been designed to be able to process approximately 195,000 tonnes per annum, which equates to approximately 500 – 550 tonnes per day or 40 tonnes per hour. The site will be designed to have the potential capacity to process in excess of this figure, therefore minimising the retention periods for potentially odorous waste feedstock. The site will be operated such that there is never more than 2 days inventory awaiting processing and will be managed in a manner that prevents wastes being accepted into the site in the event that the site is inoperable. All wastes accepted on site will be required to be pre-declared and be deemed acceptable by the site manager prior to the transportation and delivery to site. All waste accepted on site will be inspected on arrival to ensure compliance with the agreed 'waste declaration form'. Waste Acceptance and inventory controls are covered within the sites EM5 document Procedures CPP-E02 to CPP-E05
2	Sealed Building, Tanks and Vessels	The building that houses the waste reception areas and autoclaves has been designed to be air tight, sealed and operated under negative pressure. The building has been designed with internal extraction that will control the pressure at a nominal negative pressure of 50 Pascals. Internal extracted lobbies are provided on the entry doorways of the reception area. All feedstock is fed through enclosed pipework between the digestion and storage tanks. All gas storage tanks will be fitted with a sealed double membrane roof, which are extracted back into the main building thermal oxidization plant.

		Sterilised digestate is stored in an enclosed storage tank prior to removal from the plant.
3	Odour Abatement	All internal extracted air from within the reception building will be treated by an UV abatement system and then extracted for use within the combustion systems of the pyrolyser and gas engines. As such all potential odour containing air will be both ultraviolet and thermally treated prior to release to atmosphere.
4	Standby odour abatement plant	In the event that the main combustion systems are not operating and hence the main odour control systems are not functioning, a standby two phase odour abatement plant will be operated. The plant is a packaged two phase system that utilises Ozone scrubbing and static fluidised Bed bio-filtration. The plant will operate at all times when the main combustion plant is not operational, i.e. start up, shutdown and emergency situations.

4.6 Noise Impacts

4.6.1 Potential Noise Sources

The design of the installation has taken into account the potential impacts on the environmental and neighbouring receptors in regards to noise.

The design of the plant for noise, odour and fugitive emissions ensures that all aspects of plant operations and processing are carried out internally. The building has been designed to be sealed and nominally air tight, with no high level openings or ventilation louvers.

Based on previous data collated from large scale MRF facilities, noise levels are frequently in the region of 85 dBA (85 dB LAeq, continuous) within process buildings. Although the proposed Installation will incorporate much less equipment than in these large scale operations to ensure a robust approach, the assessments carried out assume internal noise levels will be a maximum 85 dB (LAeq,T) during periods of the night.

Accordingly the processing plant and associated equipment has been designed in accordance with best practice and to ensure that that internal noise does not present an issue to the employees at the site under the Control of Noise at Work Regulations and to ensure that noise breakout does not lead to noise nuisance at the identified sensitive receptors.

4.6.2 Noise Abatement Measures

All key components identified in the table below have been specified to meet a noise specification such that the occupational noise exposure limits as defined by the EC Physical Agents Directives and their regulations (Control of Noise at Work Regulations) are met. As required by the above regulations the site has specified an occupational noise climate (i.e. internal noise levels) to be below the first action level of 80dBL.epd. This will be achieved by the equipment manufacturers through the use of acoustic enclosures around all internal noise generating equipment.

It is considered that given the level of noise control engineering that has been designed into the plant and the sound insulation that will be provided by the building fabric (composite insulated panels with no penetrations), that there is no potential for the internal installed equipment to create a noise nuisance at the neighbouring receptors.

All associated external ancillary plant (i.e. combustion fans etc) will be enclosed within dedicated acoustic enclosures and screened by the main plant building. All discrete air emissions sources have been specified to be fitted with stack attenuators, such they are inaudible at the site boundary.

The identified noise generating plant and equipment associated with the Installation and the proposed variations have been identified in the Table 4.5

Table 4.5: Identified Noise Sources and Abatement

Equipment	Description	Location of source	Nature of noise	Duration	Abatement fitted	Significant impact at receptor
Transportation and external vehicle movements	Vehicle engine and drive-train noise	Along access roadways and site entrances	Intermittent occasional impact noises due to '*road bumps*'	Short term	Road will be maintained in good order. All vehicles requested to observe site speed limits Site orientation and layout has been selected to screen transportation noise as much as practically possible.	No, the deliveries and collections of waste will be limited to daytime hours only.
Reception and delivery	Internal vehicle noise, hydraulic and fan plant noise	Internal	Intermittent plant noise	Continuous	Yes – Building is double skinned, sealed. All protrusions and building apertures are acoustically treated. Access doorways will be 'fast acting roller shutter type' fitted with lobbies. All roller shutter doors have been orientated away from key receptors. Significant screening from building will occur.	No, all internal reception activities will be carried out internally. Buildings are treated to prevent noise break out
Conveyor plant	Continuous fan and motor noise	Internal	Continuous plant noise	Continuous	Yes – Building is double skinned, sealed. All protrusions and building apertures are acoustically treated. Access doorways will be fast acting roller shutter type with lobbies.	No, all internal reception and treatment activities will be carried out internally. Buildings are treated to prevent noise break out.
Autoclave	Continuous fan and motor noise. Steam discharges and extraction noise.	Internal	Continuous low pitched tonal plant noise with intermittent peaks	Continuous		
Segregation plant	Continuous fan and motor noise. Fan extraction noise. Occasional metal impact noise.	Internal	Continuous tonal plant noise with intermittent peaks	Continuous		
Pyrolysers	Combustion fan and burner noise.	Internal	Continuous tonal plant noise.	Continuous	All combustion plant is fitted with acoustic treatment and draws the combustion air from internal sources.	No, all buildings are treated and sealed to prevent noise outbreak.

Table 4.5: Identified Noise Sources and Abatement						
Equipment	Description	Location of source	Nature of noise	Duration	Abatement fitted	Significant impact at receptor
	Hydraulic and pneumatic plant noise					
Gas engines	Combustion air intakes and associated combustion noise	Internal	Continuous low pitched tonal noise	Continuous	Gas engines will be installed within dedicated acoustic enclosures. All air intakes will be located internally and be treated. All exhausts will be acoustically treated to be inaudible at Installation boundary.	No, all aspects of the gas engines will be acoustically treated.
Engine Flues	Tonal exhaust noise from three individual point sources	Elevated – External	Continuous tonal noise – fitted with attenuation	Continuous		
Pyrolyser exhausts	Tonal exhaust noise from individual high level stack	Elevated – External	Continuous low pitch tonal noise.	Continuous	ID fan and associated equipment fitted with acoustic housing. All exhausts attenuated to be inaudible at Installation boundary.	No, all aspects of the pyrolyser will be acoustically treated.
Bag house	Total plant noise from low level bag house	Ground Level – External	Tonal with intermittent high frequency air pulse	Continuous	Yes – Baghouse plant will be installed with full acoustic treatment. All plant will be inaudible at the site boundary	No – Baghouse plant will be acoustically treated.

4.6.3 Potential Impacts

Based on the above, it is considered that the proposed facility will not have a significant environmental noise impact on the nearby residential receptors.

A detailed noise impact assessment has been provided within SOL0613CPP03_MD Volume 2: Annex C3.

4.7 Fugitive emissions

The entire waste treatment building has been designed to ensure that all odour, vapour and fugitive emissions are contained within the main building.

The entire building is operated under negative pressure such that all internal emission releases are contained within the main building.

The entire building is operated under negative pressure such that all internal emission releases are contained and treated.

All fugitive emissions to air are managed through the Odour Management Plan (SOL0613CPP03_MD Volume 2 - Annex D2).

4.8 Waste Generation and Management

4.8.1 Types and Amounts of Waste

The autoclave process will generate a number of sterile recyclates, all of which will be transferred off site for recycling. Typically the recyclate will comprise ferrous and non ferrous metals (approximately 6% and 3% respectively), plastics and glass (approx 21% total yield).

The pyrolysation process will not inherently produce significant quantities of waste. With the exception of relatively small quantities of scrubber and maintenance wastes, the primary waste stream from the installation will be vitreous slag (melted charcoal ash) all of which will be reused off site as an aggregate material.

The vitreous slag has been tested in accordance with the Waste Acceptance Criteria, and is both non hazardous and inert. Therefore it is the intention to transfer this material off site for use as an aggregate material. Typically, vitrified slag will be approximately 11% of the total waste input into the pyrolyser.

As such, the amount of waste char generated on site is expected to be in the region of 5000 - 8000 Tonnes per annum. Table 4.6 below shows a tabular summary of site wastes.

The dry fraction of the anaerobic digestate is suitable for feeding back into the front end of the autoclave process or/blending directly with the biomass fibre prior to pyrolysis.

All liquid digestate will be exported off site for use as land conditioning/fertilising agents.

Table 4.6: Waste Summary

Waste	EWC Code	Approximate Quantity (T)	Source	R / D Code	Environmental Fate
Ferrous Metals	19 12 02	5,000	Autoclave	R4 (Off site recycling)	Recycled
Non Ferrous Metals	19 12 03	2,000 – 3,000	Autoclave	R4 (Off site recycling)	Recycled
Plastics	19 12 04	10,000 – 15,000	Autoclave	R5 (Off site recycling)	Recycled
Glass	19 12 05	1,500 – 2,000	Autoclave	R5 (Off site recycling)	Recycled
Vitrified Slag	19 04 01	8,000	Pyrolyser	R5 (Off site recycling)	Aggregate
Maintenance oils	13.02	20	Gas Engines and associated hydraulic plant	R9 (Off site Treatment)	Reclaimed and reused
Scrubber wastes	19 01 05*	50	Gas Scrubber	D9 (Off site treatment)	MBT Treatment and disposal
Filter plant wastes	19 01 16	50	Filter plant	D1 (offsite disposal)	Landfill
Digestate (Solid and Liquid)	19 06 03 19 06 04 19 06 05 19 06 06	70% of AD waste stream (Assume 30,000T)	AD plant	R10 & D1 (land spreading)	Spread to land

4.8.2 Waste Storage

The design of the installation has taken into account the potential impacts on the environmental and neighbouring receptors.

With the exception of local 'point of use' storage vessels, all waste will be stored within dedicated bays within the Reception Building.

All waste vessels, will be clearly identified, sealed and stored internally within a secured area protected by secondary containment.

All digestate will be stored within dedicated sealed tanks.

4.8.3 Resource Efficiency and Climate Change

The Operator will establish Key Performance Indicators (KPI's) when site electricity generation figures are available. The composition of the waste materials in the process will not vary greatly over the life of the plant.

Should any site equipment or technology be replaced, efforts will be made to replace the unit with one which is more energy efficient, if available.

The site has been designed to ensure that all potential electrical energy is generated and supplied to the grid. A summary of the basic measures are provided below:

- Wherever possible the plant utilises the waste heat from the engines to pre-heat the waste streams and to achieve pasteurisation
- All parasitic loads of the plant will be provided by the generated electricity, and hence no net energy imports are required to power and operate the plant.
- All pipelines, heated tanks and thermal processes are lagged and insulated to ensure that heat loss is minimised and prevented.
- The CHP engines specified for the plant are considered to be best in class.
- All ancillary plant (fans and motors) have been specified with high efficiency electrical motors and variable speed drives.
- The plant is controlled by PLC and optimised to ensure maximum efficiency and minimal operation of ancillary components where required.
- The site will create KPIs based on monitoring data from how much energy is used to run the site and whether this can be reduced. Within six months of operating the Operator will produce a report detailing the energy uses at the site and where energy use improvements, if any, can be made.
- The site will not be subject to any Climate Change Levy (CCL) agreements.

5 ENVIRONMENTAL MONITORING

5.1 Emissions to Air

The main emissions from site (as identified within Table 4.1) will arise from the exhausts from the main gas generation plant.

The plant will be designed to have continuous emissions monitors (CEMS) located on the main exhaust stack of the pyrolysis plant (Emission Points A1 & A2). The CEMS will monitor particulates, NOx, carbon monoxide, HCl and VOC (through surrogate monitoring of carbon monoxide).

The continuous monitors will operate on a 24-hour basis and will include the facility for on-line monitoring of the gas concentrations and provide for any out-of-tolerance indications to be made to off-site staff.

All CEMS equipment and associated platforms and sampling ports installed on site will meet the requirements of the Environment Agency Technical Guidance Note M2.

All CEMS equipment shall be MCERTS approved.

5.1.1 Syngas Quality Monitoring

Under the Renewables Obligation Order 2013, generating stations using gasification or pyrolysis to produce a gaseous fuel are obliged to measure the gross calorific value of this fuel so that Ofgem can place generation from a gasification / pyrolysis station within the appropriate band in a given month. This requirement is set out in Schedule 2.1 Part 1 of the Order.

In accordance with this requirement, all pyrolysis gas being produced by the plant will be subject to continuous measurement and analysis. The analysers used by the plant will comprise high speed process gas analysis for monitoring and control of Calorific value, Wobbe Index, Specific gravity and the Air/Fuel ratio of process gas.

This analyser will feed back directly into the SCADA control system and be used to control a number of the key input parameters of the plant (i.e. retort speed, fuel feed rate etc).

In addition the pyrolysis gas produced by the plant will be subject to periodic compliance sampling to double check and verify the online analysers and to confirm other gas quality aspects (gas chemical analysis etc).

In addition, the gas engines that will be used for downstream electrical generation will all be fitted as standard with engine management systems that will as standard modulate in accordance to any variations in gas parameters. The gas engines will typically control by continuously monitoring gas CO levels, gas pressure, flow rate and temperature.

The gas engines will be interlocked to the pyrolyser control system to ensure that any significant fluctuations in gas quality outside of the stated specification leads to a controlled shut down of the system.

The inclusion of an online gas analyser and engine management system negates the need for CEMs equipment to be installed on the gas engine plant.

5.2 Emissions to Water

Under normal operation there will be no emissions to controlled water (W1) as all water emissions and run off will be utilised by the grey water recycling system.

Any emissions to W1 will be via 3 stage interceptors and will meet with the requirements of the urban waste water treatment directive.

Monitoring will be carried out for the following parameters on a 3 monthly (quarterly) basis:

- BOD;
- Total Suspended Solids;
- pH;
- Metals; and
- Oil and Grease.

5.3 Emissions to Sewer

There are no point source emissions to sewer arising from the process. Therefore no monitoring is required.

5.4 Emissions to Land

There are no point source emissions to land arising from the process. Therefore no monitoring is required.

5.5 Monitoring frequency

The process will be subject to a range of process monitoring which has been designed to comply with the requirements of the EA M1, M2 and WID guidance requirements.

Table 5.1 Monitoring Frequency

Emission Point	Parameter	Monitoring Frequency	Methodology
A1, A2	• Particulate Matter • Total Organic Carbon • Hydrogen Chloride • Hydrogen Fluoride • Carbon Monoxide • Sulphur Dioxide • Oxides of nitrogen	• Continuous daily & ½ hour average for all parameters	MCERTS certified CEMS equipment
A1, A2	• Particulate Matter • Total Organic Carbon • Hydrogen Chloride • Hydrogen Fluoride • Carbon Monoxide • Sulphur Dioxide • Oxides of nitrogen • Toxic Metals • Dioxin & Furans	• Periodic (6 monthly)all parameters	EA Monitoring Guidance M1/M2 compliant extractive sampling

	• Dioxin like PCB's • Specific Individual PAH's		
A3 –A5	No specific third party sampling proposed. Process will be equipped with continuous engine management control and monitoring to maintain optimum engine conditions. Plant will be equipped with CEMs monitoring equipment for NOx only.		
W1	• BOD • Total Suspended Solids • pH • Metals • Oil and Grease	• Quarterly	In accordance with EA Monitoring Guidance M18
NA	Pyrolysis gas Quality	Continuous Gas sampling • Calorific value • Wobbe Index • Specific gravity • Air/Fuel ratio	As per Ofgem requirements
Vitrified Ash	• TOC		In accordance with the IED/WID 3% TOC standard.
Odour	In accordance with agreed OMP	Daily	In accordance with agreed OMP

6 BAT APPRAISAL

6.1 Technology Appraisal

There is a number of potentially suitable Energy from Waste (EfW) technologies which have been considered for the Installation. Although all of the technologies reviewed are capable of treating source segregated or mixed/municipal sourced wastes (MSW), a majority have been rejected on ground of environmental impact, operational cost or efficiency.

Advanced conversion through pyrolysis with upstream autoclave conditioning has been selected for the following reasons:

- The autoclave process will produce segregated sterile recyclates which are suitable for off site processing and reuse. Therefore recovering approximately 30% of all wastes processed at the plant (approximately 40,000 tonnes per annum of recovered recyclates).
- The pyrolysis process used by the installation creates a very clean synthesis gas which is ideal for the combustion in gas engines.
- The pyrolysis plant does not create any waste materials that cannot be otherwise reused, re-pyrolysed or recycled.
- The upstream fuel conditioning, pyrolysation process and gas use of gas engines does not require the same level of flue gas cleaning equipment as conventional mass burn incinerators or other gasification processes. Beyond the requirements for dust abatement (ceramic filtration), there is no requirements for acid scrubbing plant, carbon injection system or electrostatic precipitators.
- Due to the fact that the plant removes all potential chlorine containing materials for the waste stream prior to the combustion of the gas, there is no potential for dioxins to be present within the plant emissions.
- The footprint and capital expenditure of the plant is significantly less than conventional waste to energy (mass burn or gasification systems).
- The capital cost per unit of energy produced by the plant is less than conventional alternatives.
- The anaerobic digestion portion of the site can be used for the treatment and processing of liquid slurry wastes and pure biomass.

Advanced conversion technologies have only emerged in recent years and have little negative perception associated with their installation. The plants constructed to date have been small scale (typically less than 10MWe) and have not created a significant public impact, due largely to their perceived environmental benefit and relatively small plant footprints. One of the key advantages of the technology is that it is not regarded as being Incineration and therefore does not receive the same level of negative publicity.

All technology is housed within one single zone building that has been optimally sized to ensure that sufficient contingency capacity exists. The building is sized to be able to accept greater material quantities and to house more equipment should it be necessary.

Typically, sorting, shredding and/or autoclaving and pyrolysis obtains an approximate input waste volume reduction of 93%, with much of the remaining by-products recovered for agricultural / or construction purposes.
Following the review of available technologies, the following conclusions have been made:

- Conventional Mass Burn or Moving Grate Incineration should be discounted as is not regarded as being appropriate technology as it does not support the regional Core Waste Strategy (in that there are relatively low rates of recyclate recovery) furthermore these technologies do not satisfy the accepted waste hierarchy. The capital cost in relation to other technology options, required land take and public perception are also considered to be negative factors.
- Of the available advanced conversion technologies, although Plasma Arc Gasification is considered to have great potential, the lack of any proven reference sites is deemed to be too higher risk to be considered further.
- Gasification / Pyrolysis are considered the most appropriate technology for this development and have been proven to able to treat MSW and be coupled to Gas engine CHP. This configuration has significant efficiency benefits over the use of boiler and steam turbine generation technologies.

Table 6.1 provides an overview of the currently available technologies which are commercially available within the Waste Sector. This table provides a comparison against the costs, specific energy use and recovery rates of each system.

Table 6.1: Technology Comparison Summary					
Parameter	Incineration (typical)	Gasification / Pyrolysis Systems	Plasma Systems	Steam Reformation	Vaporolysis System
Capital Cost (£M / net MW)	4-8	3-5	3-7	3-5	2-3
Scalability	Limited Modularity	Limited Modularity	Limited Modularity	Limited Modularity	Complete Modularity
	Scalable	Limited Scalability	Limited Scalability	Very Scalable	Totally Scalable
Fractions of waste used to produce Energy	All waste (excl. recovered metals) including plastics and all other waste types	All waste (excl. recovered metals) including plastics and all other waste types that are shredded to small sizes	All waste (excl. recovered metals) including plastics and all other waste types that are shredded to small sizes	All waste (excl. recovered metals) including plastics and all other waste types that are shredded to small sizes	Only the biomass fraction of the waste is used to produce energy, this ensures that the recycling of all other materials is maximised. Local industry benefits from clean, sterile recyclates
Municipal Waste Treatment capability	No	No	No	No	Yes
Energy use of process	100% of energy is contained in noxious exhaust gas, which must be cleaned and then the heat captured by steam is converted to electrical energy, limiting conversion effi c. 20%	A significant proportion of the feedstock energy is used as a heat source for the process via direct combustion, not recoverable as electricity. Heavy 'back end' abatement	Syngas is converted to electricity to run the plasma arc at a substantial conversion loss. A significant penalty for final plant output eff	A direct feed of clean syngas powers the kiln conversion process, maximising simplicity and plant output efficiency	A direct feed of clean syngas produced from biomass generates power and provides steam for the system, this leads to high conversion efficiencies and export of electrical and thermal loads
Need to modify waste feedstock (excl. extraction of metals)	Must be dried and sized, small particles are not used and metal is removed	Most systems cannot handle variability of waste feedstock (thus not suitable for MSW). Feedstock must be shredded, dried and all metals removed	Feedstock must be shredded, dried and all metals removed. Requires a high BTU value of feedstock (i.e. high % of plastics)	Feedstock must be shredded, dried and all metals removed	No waste modification required
Recyclables	Metals (dirty)	Metals (dirty)	Metals (dirty)	Metals (dirty)	Metals, Plastics, Glass. All recyclates produced are Grade A and sterile

Table 6.1: Technology Comparison Summary

Parameter	Incineration (typical)	Gasification / Pyrolysis Systems	Plasma Systems	Steam Reformation	Vaporolysis System
Energy Conversion (MW / MW feed)	17%	12 – 16%	15 – 25%	15 – 25%	25 – 33%
Waste Mass Reduction (%)	75%	85%	90%	90%	85% (99% if recyclables are excluded)
Waste Volume Reduction (%)	85%	92%	90%	95%	85% (99% if recyclables are excluded)
Dioxins & Furans ($ng.m^3$)	Large	Some	Not detectable	Not detectable	Not detectable
Fly Ash (kg / Tonne)	8.04	1	0.01	0.009	0.005

6.2 BAT Comparison

An assessment of the applicable indicative BAT requirements (as stated by EPR Guidance Note 5.01 Incineration) for the sector has been carried out. The following indicative BAT measures are considered to be met by the process.

6.2.1 Energy Efficiency

- The Installation uses higher efficiency electrical generation technology (i.e gas engines); The proposed process will achieve the required 5-9MWe per 100,000 tonnes of material processed;
- Waste heat will be used for internal uses i.e. provision of high grade heat for autoclave boilers, process drying, sterilisation and digester heating. Furthermore, provision has been made for the export of heat should a suitable user become available;
- The char materials produced by the process are used as the primary fuel for retort heating;
- The plant will be maintained at steady capacity to avoid downtime;
- Effective maintenance shall be employed to ensure that:
  - Heat exchangers are maintained for high heat transfer.
  - Uncontrolled air ingress is minimised by the maintenance of seals.

The proposed ACT process meets the definition of a renewable technology as per the Article 2 of EC Directive 2009/28/EC on the 'promotion and use of energy from renewable sources and amending and subsequently repealing Directives 2001/77/EC and 2003/30/EC'. The 'so called' Renewable Energy Directive 2009.

Article 2 of Directive 2009/28/EC, entitled 'Definitions', provides:

'For the purpose of this Directive, the following definitions shall apply:

a. *'renewable energy sources'* shall mean renewable non-fossil energy sources (wind, solar, geothermal, wave, tidal, hydropower, biomass, landfill gas, sewage treatment plant gas and biogases);

b. '*biomass*' shall mean the biodegradable fraction of products, waste and residues from agriculture (including vegetal and animal substances), forestry and related industries, as well as the <u>biodegradable fraction of industrial and municipal waste</u>;

c. '*electricity produced from renewable energy sources*' shall mean electricity produced by plants using only renewable energy sources, as well as the proportion of electricity produced from renewable energy sources in hybrid plants also using conventional energy sources and including renewable electricity used for filling storage systems, and excluding electricity produced as a result of storage systems;

d. '*consumption of electricity'* shall mean national electricity production, including autoproduction, plus imports, minus exports (gross national electricity consumption).

The energy efficiency of the plant has been assessed using the CHPQA methodologies for high quality CHP plant and has been calculated as being 57%. (Please refer to Annex B1 for further details).

6.2.2 Raw materials and Water Usage

The following fundamental design principles have been incorporated into the plant to ensure the conversation of raw materials, water and energy.

- The plant has been designed to ensure that whatever wastes are processed by the front end autoclave treatment plant, the consistency of the biofibe is in accordance to a specification and is homogeneous.
- All waste is processed such that potentially contaminative components are removed. As such no dioxin, toxic metal or VOC forming compounds remain in the fibre. As such all pyrolyser feedstock will be homogeneous and manufactured to a specification;
- The plant has been designed to ensure that all residues are reused or recycled;
- Due to the purity of the biofibe feedstock, very little gas treatment is required. As such no gas scrubbing is required, thus minimising water and chemical usage;
- The plant has no gas scrubbing, ash quenches or evaporative cooling towers;
- The overall water use is approximately 100 litres per tonne of waste processed. This figure is <10% of the 'typical' municipal incineration plant;
- The plant utilises large percentages of rainwater as a water feedstock and recycles all water within the process;
- All washwater is reprocessed and used within the process.

6.2.3 Avoidance, recovery and disposal of waste

Waste will be avoided and minimised through the following measures:

- The plant does not produce fly or bottom ash;
- All feedstock delivered to the site will be subject to an acceptance and pre-acceptance process that should ensure that the potential for inappropriate feedstock delivery is minimised;
- The site has a detailed inspection process to avoid unsuitable wastes being introduced to the process;
- The safe storage of rejected loads has been provided within the reception area and procedures will be in place for dealing with such loads to ensure that they are safely stored and dispatched for onward disposal. The storage times will be minimised;
- All recovered waste streams have been provided dedicated storage and recycling storage areas.

6.2.4 Operations

- All wastes will be pre-treated through the autoclave processes to ensure that all material pyrolysed is clean and manufactured and conditioned in accordance to a detailed specification and free of contaminants;
- Very high levels of housekeeping will be employed throughout the site;
- All vehicles will be loaded and unloaded within the building and on sealed concrete hardstanding and engineered containment;
- No waste will be stored externally;
- The waste reception and treatment building are maintained under negative pressure, with all extracted air being used for supply to the combustion fans;
- Segregated water systems have been incorporated into the design of the plant to minimise the contamination of rainwater;
- All building doors will be self closing and fast acting.

6.2.5 Waste Charging

- All feedstock into the pyrolyser will be on an automatic feed system to prevent waste feed at start-up, until the required temperature has been reached; whenever the required temperature is not maintained; whenever the continuous monitors show that any emission limit value is exceeded due to disturbances or failures of the purification devices;
- Waste charging will be interlocked with pyrolyser conditions so that charging cannot take place when the temperatures and air-flows are inadequate, when any flue gas cleaning bypasses are open or where the continuous monitors show that the emission limit values are being exceeded for a period of time in excess of the limits set within WID;
- The charging process has been designed to airtight and all pressure controls have been designed to avoid escape of fumes or excess air flows;
- The charging rates will be maintained at the optimum feedstock design rate of 3-4 tonnes per hour per unit.

6.2.5 Legislative Requirements

- The gases resulting from the combustion of non-hazardous wastes will be maintained at above 850°C for at least 2 seconds;
- Auxiliary burners have been provided to achieve and maintain the required temperatures;
- The combustion temperature and residence time, and the oxygen content of the stack gases have been validated under the most unfavourable operational conditions;
- Ash produced by the plant will comply with WID 3% TOC requirements;
- The installation will not give rise to significant ground level air pollution as demonstrated by Section 7 'Environmental Impact'.
- Table 6.2 provides a detailed summary of WID specific compliance issues and how they apply to the plant and operations.

6.2.6 Emissions to Air

Air Emissions will be minimised through the following measures:

- Sorbant Injection of hydrate lime
- Ceramic filters will be used to provide reliable abatement of particulate matter to below 5mg/m^3;[7]
- Ceramic filters with multiple compartments will be used, which can be individually isolated in case of individual bag failures. There will be sufficient of these to allow adequate performance to be maintained when filter bags fail, i.e. design will incorporate capacity for meeting emission limits during on line maintenance;

[7] The char combustion system operate at a very high temperature and fulfils the role of being the primary thermal oxidiser for the plant. The internal temperature of the combustion chamber can exceed 1200°C and as such requires a high temperature filtration system. The plant under normal operation will be operated with the Heat Recovery Steam Generator Boilers, however this plant may be required to bypass (for whatever reason) and as such the baghouse plant may be subject to higher temperatures than the 300°C normal operating temperatures. The use of a conventional cloth baghouse plant would have the potential to catch fire under such circumstances. Furthermore it is possible to achieve much higher removal efficiencies of finer particulates.

As such, the use of conventional cloth construction baghouse plant is not considered BAT for this application and a high efficiency ceramic filtration system has been selected accordingly.

- The filtration systems will be equipped with bag burst detectors (e.g. differential pressure type) on each compartment to indicate the need for maintenance when a bag fails. This type of system provides better control of emissions than simple observation of emitted particulate levels;
- The high level of feedstock conditioning removes the potential for the generation of dioxin and VOC compounds. The subsequent cleanup stages of the pyrolysis gas are minimal and can be achieved through the use of a dolomite tower (dry gas cleaning train);
- The gas is cooled quickly to avoid de novo synthesis of dioxin between 450°C and 200°C;
- The plant is fitted with selective catalytic reduction;
- All indicative IED ELV's will be met.

6.2.7 Odour

Odour will be minimised through the following measures:

- Enclosing odorous waste all the way to the treatment process (autoclaves);
- Confining waste to designated internal areas;
- Ensuring that putrescible waste is treated within an appropriate timescale;
- Regular cleaning and (for putrescible wastes) disinfection of waste handling areas ;
- The design of all waste handling areas facilitates cleaning;
- Ensuring good dispersion at all times from any release points;
- Drawing air from odorous areas at a rate which will ensure that odour is captured (all); and treating such extracted air prior to release to destroy the odours, any odourous air is fed into the combustion process;
- A standby 2 stage odour abatement plant has been specified to use during all times when plant combustion systems are not fully operational (start up, shutdowns etc).

Table 6.2 Chapter 4 IED / WID Compliance Statement			
IED Incineration Requirements		Compliance Statement	Section Reference
1.	Does the installation contain more than one incineration line? Identify with a brief reference (e.g. L1, L2 etc) and provide a brief description (e.g. fixed hearth, chain grate) of each line.	The Installation only has one 'Incineration Line' comprising 4 interconnected pyrolysis units. Detailed description provided within Section 3 of the Application Support Document	SOL0613CPP03_MD – Section3
2.	State the maximum design capacity (in tonnes/hour) for waste incineration for each line, and the maximum total incineration capacity (in tonnes/hour) of the plant.	The pyrolysis plant has a maximum design capacity of 16 tonnes per hour of conditioned Biofibre. The pyrolysis plant comprises four interconnected units each with capacity of 4 tonnes per hour. The pyrolysis plant only thermally treats conditioned biofibre.	SOL0613CPP03_MD – Section 3
3.	Are any of the wastes you treat hazardous waste for WID / IED purposes?	No hazardous wastes are processed within the Installation. Not Applicable	NOT APPLICABLE
4.	For each line, provide the following information: a. Not Applicable b. If the operating temperature is below 1100°C for incineration of hazardous waste with greater than 1% halogenated hydrocarbons expressed as chlorine, or below 850°C for all other wastes, you must request a derogation under IED (former WID Article 6(4)) with a justification that the operation will not lead to the production of more residues or residues with a higher content of organic pollutants than could be expected if operation was according to IED / WID conditions. c. State the residence time of gas at the operating temperature given above. < 2 secs? d. Where the residence time is less than 2 seconds, you must request a derogation under IED (former WID Article 6(4)) : Not applicable. e. Describe the technique that will be used to verify the gas residence time and the minimum operating temperature given, both under normal operation and under the most unfavourable operating conditions anticipated, in accordance with IED (Former WID Article 6 (4)). f. Describe where the temperature in the combustion chamber will be measured with a demonstration that it is representative in accordance with IED (former WID Article 6(1)).	• The plant is fully designed and interlocked, such that the process will not operate until the Thermal Oxidiser is operating at 850°C. • The thermal oxidiser plant and retort chamber have been CFD modeled to ensure that the minimum retention time is 2 seconds at 850°C. No derogation against WID Article 6 is required. The length of the retort ducts are such that 2seconds retention is ensured. • The CFD modeling is included within Appendix B2 of the support Document. • The combustion chamber will be measured at the exit of the thermal oxidiser duct. During the commissioning stages of the Installation all residence times and temperatures will be validated through the following: • Measurement of worst case gas residence time using a time of flight method • Use of multiple traverse measurements of gas temperature to identify (or confirm) the lowest gas temperature location at, or shortly after, the qualifying secondary combustion zone • Confirmation that 95% of the one-minute mean temperatures (continuously monitored at the identified lowest temperature location over a period of at least one hour) exceed the stated minimum temperature requirement • The use of suction pyrometers to measure temperatures.	SOL0613CPP03_MD Volume 2 – Annex B2

5.	For each line, describe the automatic system to prevent waste feed under the following circumstances: a. during start-up; b. when continuous emission monitors show that an emission limit value (ELV) is exceeded due to disturbances or failures of the abatement equipment; c. whenever the combustion chamber temperature has fallen below a set value. You must show that you comply with IED (former WID Articles 6 (3) and 6 (4)).	The entire process is PLC controlled and SCADA monitored with interlocks. All process controls will be connected to a central control system that will ensure all of the WID set points and process conditions are met prior to the operation of the plant with waste. All process controls will be monitored to ensure that any plant failure or failure to meet a IED/WID process condition results in a controlled shut down. If any CEMs equipment indicates an exceedance of IED/WID ELV's then the plant will automatically alarm and shut down.	SOL0613CPP03_MD – Section 3-4
6.	State the temperature set point at which waste feed is prevented. It must be at least the temperature specified in IED/WID (1100°C for hazardous waste with greater than 1% halogenated hydrocarbons expressed as chlorine, or 850°C for all other wastes) or an alternative temperature as allowed by IED (former WID Article 6(4)) in which case the applicant should demonstrate how WID Article 6(4)'s requirements are met.	No biofibre will be processed through the pyrolysers unless the thermal oxidiser has reached the 850ºC set point. This will be a key process control parameter of the SCADA and PLC control system.	SOL0613CPP03_MD – Section 3 - 4

7.	Does the plant use oxygen enrichment in the incineration combustion gas? If it does, specify the oxygen concentration in the primary air and secondary air (% oxygen). This is required to enable us to specify standards for measurement as required in Article 11 (8)	This aspect of WID does not apply. No oxygen enrichment is required. The cleaned synthesis produced by the plant has been subject to an End of Waste Determination by the Environment Agency and has been determined to meet the necessary test to be determined as a 'product'. Accordingly, the combustion of the resultant pyrolysis gas produced by the pyrolysis plant within the CHP plant does not fall under the Waste Incineration Directive. This position is supported by the EU Judgment of the Court (Second Chamber) of 4 December 2008 (reference for a preliminary ruling from the Korkein hallinto-oikeus — Finland) — Lahti Energia Oy (Case C-317/07), which decreed that *'a gas plant whose objective is to obtain products in gaseous form, in this case purified gas, by thermally treating waste must be classified as a 'co-incineration plant'* within the meaning of Article 3(5) of Directive 2000/76; and that *'a power plant which uses as an additional fuel, in substitution for fossil fuels used for the most part in its production activities, a purified gas obtained by the co-incineration of waste in a gas plant does not fall within the scope of that directive.*' On the basis of the above decision, the proposed pyrolysis plant is regarded as a 'co-incineration plant' and the associated power plant (CHP Engines) would not fall under the scope of that directive.	SOL0613CPP03_MD – Section 3-4 & Volume 2 - Annex B7
8.	Does each line of the plant have at least one auxiliary burner controlled to switch on automatically whenever the furnace temperature drops below a set value in accordance with the requirements of IED (former WID Article 6 (1))? If the set value is not at least the temperature specified in WID (1100°C for hazardous waste with greater than 1% halogenated hydrocarbons expressed as chlorine, or 850°C for all other wastes), justify how operating at this lower temperature will not lead to the production or more residues or residues with a higher organic pollutant content as required by IED/ former WID Article 6 (4)?	Yes – The thermal oxidiser has both charcoal burners and auxiliary oil burners (start up). These will be controlled to ensure that the IED (former WID article 6 (4)) are met.	SOL0613CPP03_MD – Section 3-4
9.	Which fuel type is used during start-up/shut-down? If it is not natural gas, LPG or light fuel oil/gasoil, provide evidence that it will not give rise to higher emissions than burning one of those fuels, as specified by IED / former WID Article 6 (1)	The thermal oxidiser / pyrolyser will operate using Gas Oil during start up. All emissions will be mitigated via the abatement plant. No increases in emissions will occur.	SOL0613CPP03_MD – Section 4

10.	Are pre-treatment methods required to ensure that the quality standard for Total Organic Carbon (TOC) content or Loss on Ignition (LOI) of the bottom ash or slag is achieved? If they are, describe them. (former WID Article 6 (1))	There is no furnace bottom ash arising from this plant. Due to the high purity of the biofibre, all char is combusted as heat for the retort. The ash from this process is vitrified and converted to inert wastes (WAC tested in batches to confirm compliance). The TOC / LOI requirements are easily achieved. Full vitrified ash analysis is provided as part of the end of waste application.	SOL0613CPP03_MD – Section 4 and Volume 2 Annex B2
11.	If any line of the plant uses fluidised bed technology, do you wish to request a derogation of the CO WID ELV to a maximum of 100 mg/m^3 as an hourly average, as provided for in IED / former WID Annex V (e)? If you do, you must provide a justification.	No Fluidised Bed Technology is used in the process.	NOT APPLICABLE
12.	For each type of waste to be burned, provide the following information a. Waste reference (e.g. WT1, WT2 etc) b. Waste description (e.g. chemical/physical description, trade name and firing locations) c. EWC classification number d. Maximum and minimum annual disposal in tonnes e. State whether it is hazardous waste for the purposes of EID and if it is, provide the following information: i. the hazardous waste category (H1 – 14); ii. the names and maximum concentrations in grams/tonne of the specified substances that cause it to be hazardous. This should include at least PCB, PCP, chlorine, fluorine, sulphur and heavy metals if these are present; iii. whether it is waste oil, as defined in Article 1 of Council Directive 75/439/EEC (former WID Article 3 (2)); iv. The waste composition and calorific value (CV) and feed rate details for the waste (former WID Article 4)	The only waste being pyrolysed by the plant is conditioned biofibre (a high purity cellulose biofuel) that has been produced using the Vaporo Tech's proprietary autoclave process. A detailed description of the biofibre is provided within Section 3 of the application support document. All details associated with EWC codes and associated tonnages accepted by the site are detailed within Section 3 of the application support document. There will be no hazardous wastes accepted on site.	SOL0613CPP03_MD – Section 3-4
Q13 -19	Hazardous wastes incineration	NOT APPLICABLE	NA
	Emissions to surface water and sewer		

20.	If the technique by which you clean the exhaust gas from the incinerator generates waste water, you must give details of the waste water treatment process and demonstrate that you comply with the requirements of IED (former WID Annex IV and Articles 8(4) and 8(5)). In particular, if you mix waste waters from your exhaust gas treatment with other waste waters prior to treatment, monitoring or discharge, you must demonstrate how you apply the mass balance requirements referred to in IED (former WID Articles 8(4) and 8(5) to ensure that you derive a valid measurement of the emission in the waste water.	No waste water is generated by the exhaust clean up processes. All exhaust clean up is dry.	NA
21.	Describe your storage arrangements for contaminated rainwater run-off, water contaminated through spillages and water arising from fire-fighting operations. Demonstrate that the storage capacity is adequate to ensure that such waters can be tested and, if necessary, treated before discharge. (former WID Article 8 (7))	All surface water drains are directed to rainwater harvesting tanks. All rainwater is collected and used within the site processes. The site typically sources 50% of all water use from harvested rainwater supplies. Only during excessive and sustained precipitation events will surface water be discharged to controlled waters. All water discharged will be clean uncontaminated surface water only.	SOL0613CPP03_MD – Section 3-4
22.	For each emission point, give benchmark data for the main chemical constituents of the emissions under both normal operating conditions and the effect of possible emergency conditions. In this section we require further information on how you monitor the pollutants in these emissions. You must provide information for flow rate, pH, and temperature. Former Article 8 of WID requires that wastewater from the cleaning of exhaust gases from incineration plant shall meet the ELVs for the metals and dioxins and furans referred to in former Annex IV of WID. Where the waste water from the cleaning of exhaust gases in mixed with other waters either on or offsite the ELVs in WID Annex IV must be applied to the waste water from the cleaning of exhaust gases proportion of the total flow by carrying out a mass balance. Monitoring for other pollutants is dependant on the process and the pollutants you have identified in response to the question.	Under normal operating conditions there will be no discharges to controlled waters. Under extreme successive rainwater events, and when all surface and grey water harvesting tanks are full to capacity, clean surface water will be discharged to controlled waters. All emissions to controlled waters will be compliant with the Urban Waste Water Treatment Directive.	SOL0613CPP03_MD – Section 5

23.	For each parameter you must define • emission point; • monitoring frequency; • monitoring method ; • whether the equipment/ sampling/ lab is MCERTS certified; • measurement uncertainty of the proposed methods and the resultant uncertainty; • procedures in place to monitor drift correction; • calibration intervals and methods; • accreditation held by samplers or details of the people used and their training/competencies;	All samples will be taken by MCERTs accredited personnel and in accordance to EA MCERTs requirements. Details of the measurement frequency is provided within Section 5 of the Application Support Document. All sampling will be carried out by MCERTS approved contractors.	SOL0613CPP03_MD – Section 4
24.	Describe any different monitoring that you will carry out during commissioning of new plant.	The site will be commissioned and processed using non waste biomass such that all control parameters can be set commissioned. All CEMS monitoring plant will be operational during all aspects of live commissioning	
25	Describe any different arrangements during start-up and shut-down.	All CEMS monitoring plant will be operational during all aspects of live commissioning	SOL0613CPP03_MD - Section 3
26.	Provide any additional information on monitoring and reporting of emissions to water or sewer.	No additional monitoring required, minimal releases to water and no emissions to sewer.	NA
	Waste Recovery and Disposal		
27.	How do you deal with the residue from the incineration plant? Explain how you minimise, recover, recycle and dispose of it.	All wastes arising from the plant are recovered. All char is recovered and used by the process as a fuel for the pyrolyser retort. All ash from the pyrolyser retort burners is vitrified and classified as Inert. Material is used for inert cover or aggregate for the construction sector.	SOL0613CPP03_MD – Section 3
	Continuous emission monitor performance		

28.	How do you intend to manage the continuous measurement system to satisfy IED (former WID Article 11 (11)?IED / former WID Article 11 allows a valid daily average to be obtained only if no more than: • 5 half-hourly averages, and • 10 daily averages per calendar year during the day are discarded due to malfunction or maintenance of the continuous measurement system. Give details of how calibration, maintenance and failure of the continuous measurement system will be managed in order to satisfy these limitations. If necessary distinguish between different incineration lines.	The CEMS equipment will be operated continuously and managed through a maintenance contract. CEMS will be fitted to the each of the individual pyrolyser units such that in the event of a failure the individual pyrolyser can be shut down until such a time the CEMS equipment is fully functional. No pyrolysation plant shall be operated without the CEMs equipment being operational and functioning correctly. All CEMS equipment shall be MCERT's approved and Sira certified.	SOL0613CPP03_MD – Section 3-5
29.	Give details of how you define when start-up ends and shut-down begins. Describe any different arrangements for monitoring during start up or shut down. Note that the emission limit values specified for compliance with IED do not apply during start-up or shut-down when no waste is being burned. Explain how you will integrate these periods into the emissions monitoring system in such a way that the reportable averages are calculated between these times, but the raw monitoring data remains available for inspection. (former WID Article 11(11)). If necessary distinguish between different incineration lines.	Start up and shut down is defined as the following: • periods where the process is being bought up to temperature (i.e. 850ºC) through the use of auxiliary oil burners; • any period when the plant is not actively processing waste derived biofibre; • at all times where the generation plant is not synchronised to the national grid; • any times that the plant is using the emergency flare.	SOL0613CPP03_MD – Section 3-5
30.	Describe each type of unavoidable stoppage, disturbance or failure of the abatement plant or continuous emission monitoring system during which plant operation will continue. State the maximum time anticipated before shut-down is initiated for each of these types of unavoidable stoppage.	The plant has been designed with an adequate degree of redundancy to ensure that the plant can remain running at all times without the need for interruption of stoppage. In the event of the CEMS equipment failure, pyrolyser failure, engine failure etc the aspect of the plant that is failed can be shutdown without detrimental impact. The entire plant has been subject to a HAZOP study and failsafe measures have been incorporated in all areas considered necessary. The only aspect of the plant that can give rise to an unavoidable stoppage is a failure of the pyrolyser emissions abatement plant.	SOL0613CPP03_MD – Section 3-5
31.	Will the values of the 95% confidence intervals of a single measured value of the daily emission limit value, exceed the percentages of the emission limit values required by WID Article 11(11) and Annex III. point 3, as tabulated below? (We will accept that MCERTS certified instruments satisfy these quality requirements)	All CEMS equipment will comply with MCERTS	SOL0613CPP03_MD – Section 5

32.	Describe the monitoring of process variables, using the format tabulated below. For emissions to air, include at least the arrangements for monitoring oxygen content, temperature, pressure and water vapour content at the points where emissions to air will be monitored (former WID Article 11 (7)). For emissions of waste water from the cleaning of exhaust gases include at least the arrangements for monitoring pH, temperature and flow rate former (WID Article 8 (6)).	The CEMS equipment installed on emissions point A1 will all comply with MCERTS requirements. The CEMS equipment will monitor O_2, Temp, pressure and Water Vapour Content as required by IED (former WID Article 7).	SOL0613CPP03_MD – Section 5
	Describe how the heat generated during the incineration and co-incineration process is recovered as far as practicable, for example through combined heat and power, the generating of process steam or district heating.		
33.	You must assess the potential for heat recovery from each line, using the guidance in this Sector Guidance Note. You must justify any failure to recover the maximum amount of heat.	All heat from the pyrolyser will be passed through a Heat Recovery Steam Generator (HRSG) and used to provide steam for the autoclave process. All engine low grade heat will be used for process drying. Detailed process flow diagrams are provided within Section 2 of the application support document.	SOL0613CPP03_MD – Section 3 - 4
34.	Describe how you will minimise the amount and harmfulness of residues and describe how they will be recycled where this is appropriate.	All waste generated by the process will be recycled, recovered or reused Details are provided within section 4 of the Application Support Document	SOL0613CPP03_MD – Section 4
35.	For each significant waste that you dispose of, provide the following information incineration line identifier residue type reference (e.g. RT1, RT2 etc) source of the residue • description of the residue • details of transport and intermediate storage of dry residues in the form of dust (e.g. boiler ash or dry residues from the treatment of combustion gases from the incineration of waste). IED (former Article 9 of WID) requires operators of incineration plant to prevent the dispersal in the environment in the form of dust. • details of the total soluble fraction, and soluble heavy metal fraction of the residues. IED (former Article 9 of WID) requires operators of incineration plant to establish the physical and chemical characteristics and polluting potential of incineration residues. • the route by which the residue will leave the installation – e.g. recycling, recovery, disposal to landfill, other.	All waste generated by the process will be recycled, recovered or reused Details are provided within section 4 of the Application Support Document	SOL0613CPP03_MD – Section 4

36.	IED / former Article 6(1) of WID requires incinerators to be operated in order to achieve a level of incineration such that the slag and bottom ashes have a total organic carbon (TOC) content of less than 3%, or their loss on ignition (LOI) is less than 5% of the dry weight of the material. Where the incinerator includes a pyrolysis stage or other stage in which part of the organic content is converted to elemental carbon, the portion of TOC which is elemental carbon may be subtracted from the measured TOC value before comparison with the 3% maximum, as specified in the Defra Guidance on the Waste Incineration Directive. Note that IED / former WID Article 6(1) requirements are complied with if either TOC or the LOI measurement referred to below is achieved. • TOC: for waste incinerators, 3% as maximum. • LOI: for waste incinerators, 5% maximum. Specify whether you intend to use total organic carbon (TOC) or loss on ignition (LOI) monitoring of your bottom ash or slag.	All char generated by the process is used for the main fuel source for the pyrolyser retort. All char is combusted and ash is vitrified to form an inert vitrified ash. There is no elemental carbon associated with the product. Vitrified ash has been WAC tested and proven to be inert. There little or no elemental carbon. TOC and LOI will be complied with.	SOL0613CPP03_MD – Section 4

7 IMPACT TO THE ENVIRONMENT

7.1 Impacts to Air

An assessment has been carried out to determine the potential air quality impacts associated with the proposed Waste to Energy facility to generate renewable electrical energy in Micheldever. The assessment was carried out using the Agency's H1 assessment model.

7.1.1 Scope of the assessment

The scope of the assessment has been determined in the following way:

- Consultation with the Environmental Health Department of Hampshire County Council;
- Review of air quality data for the area surrounding the Site;
- Desk study to confirm the location of nearby areas that may be sensitive[8] to changes in local air quality; and
- Detailed dispersion modeling of the emission of combustion pollutants from the stacks.

The assessment for the proposed facility comprises a review of emission parameters for the facility and dispersion modeling to predict ground-level concentrations of pollutants at sensitive human and habitat receptor locations.

Predicted ground level concentrations are compared with relevant air quality standards for the protection of health and critical levels/ loads for the protection of sensitive ecosystems and vegetation. This modeling is presented within SOL0613CPP03_MD Volume 2: Annex C1 (Air Quality Impacts) of this document.

A number of worst-case assumptions have been made in the interests of providing a conservative assessment of impacts associated with the proposed development:

- Three gas engines are proposed for the site, however one of the engines will be used as a back up unit and it is extremely unlikely that all three engines will operate simultaneously.
- The plant has been assumed to be operating at full load, continuously throughout the year; in reality the plant is expected to operate for around 8000 hours per year.
- Maximum WID emission limits have been assumed, however it is likely that the actual emissions from the plant will be considerably lower.

Each engine operates independently, with emissions to air via individual stacks. In the event that one individual engine is not operational, the emission temperatures and velocities of the remaining units will be unaffected.
The pyrolyser retorts exhaust to atmosphere via a common exhaust system which is routed to two banks of ceramic baghouse filtration units. The exhausts from each of the baghouse units is fixed, irrespective of the throughput / numbers of pyrolyser retorts which are operational.

[8] The Air Quality Impact Assessment has been completed taking into account all designated Habitats within 10Kthe presence of the identified local wildlife sites within 2km. This revised impact assessment take into account both the critical load of each identified Habitat; and the additional impacts / emissions arising from the ammonia slip resulting from the use of Selective Catalytic NOx Reduction. All figures are based on OEM manufacturers quoted performance (Johnson Matthey Ltd).

For the initial Group III trace metal predictions, it has been assumed in accordance with the Environment Agency's metals guidance, that each of the metals is emitted at the maximum WID group ELV (0.5 mg/Nm^3) as a worst case. The same approach has also been adopted for the Group I and II metals.

Where the screening criteria set out in the guidance are not met, an emission concentration equal to half of the ELV for Group I metals and 1/9th of the ELV for Group III metals has been assumed. If the screening criteria are still not met, typical emission concentrations for energy from waste plants have been used, as specified in the guidance. All emissions data has been provided assuming the reference conditions stipulated by H1.

The Applicant neither wishes nor needs to apply the IED Chapter IV 'emission exceedence' requirements to the abnormal operations of the plant. Sufficient capacity is allowed within the design of the plant to ensure that the emissions limits can be met at all times. Therefore abnormal operations have not been specifically modeled.

7.1.2 Sensitive Human Health Receptors

Specific receptors have been identified where people are likely to be regularly exposed for prolonged periods of time (e.g. residential areas). The location of the discrete sensitive receptors is presented in Table 7.1 below.

7.1: Discrete Human Receptor Locations

ID	Receptor	OS GR x (m)	OS GR y (m)
HR1	Coxford Farm	451942.3	143788.3
HR2	The Boundary	452200.6	143823.3
HR3	The Pines	452447.3	143834.9
HR4	Woodlands	452350.6	143823.3
HR5	The Beacons	452653.9	144096.6
HR6	Granary	452050.6	143968.2
HR7	Works Building	451762.3	143598.3
HR8	Western Farm	452104.0	143374.9
HR9	Travellers Rest	451995.6	142891.6
HR10	Micheldever Station A	451484.0	142965.0
HR11	Micheldever Station B	451634.0	142975.0
HR12	Micheldever Station C	451750.6	142981.6
HR13	New Road A	451928.1	142867.7
HR14	New Road B	451648.1	142885.4
HR15	Station Grange Yard	451648.1	142885.4
HR16	Black Wood Holiday Cottages	452924.6	143347.1

The results of the atmospheric dispersion modelling are provided in the Air Quality information for the installation (SOL0613CPP03_MD – Volume 2: Annex C – Air Quality Impacts). The results show that the significance of impacts at the location of maximum ground level concentration for all pollutants is assessed as 'insignificant'. As this represents the maximum ground level concentration, the overall impact in the study area from combustion emissions emitted from the proposed development is considered to be 'insignificant.'

The Human Health Risk Assessment methodology used in this assessment has been structured so as to create 'realistic' worst case estimates of risk. A number of features in the methodology give rise to this degree of conservatism, most obviously through the assumption that the exposed individual lives in the area of maximum impact and consumes most of his/her animal, dairy, vegetable and cereal products derived from this area where deposition will occur. The human health impact assessment does not include any impacts associated with the emissions of dioxin and furan on the grounds that they are not released by the process.

Given the conservative nature of the assessment, it can be demonstrated that the maximally exposed individual is not subject to a significant carcinogenic risk or non-carcinogenic hazard, arising from exposures via both inhalation and the ingestion of foods.

7.1.3 Impact on Sensitive Habitat Sites

The Environment Agency's H1 guidance[9] states that the impact of emissions to air on vegetation and ecosystems should be assessed for the following habitat sites within 10 km of the source:

- Special Areas of Conservation (SACs) and candidate SACs (cSACs) designated under the EC Habitats Directive[10];
- Special Protection Areas (SPAs) and potential SPAs designated under the EC Birds Directive[11]; and
- Ramsar Sites designated under the Convention on Wetlands of International Importance[12].

Within 2 km of the source:

- Sites of Special Scientific Interest (SSSI) established by the 1981 Wildlife and Countryside Act;
- National Nature Reserves (NNR);
- Local Nature Reserved (LNR);
- Local wildlife sites; and
- Ancient woodland.

Habitat receptor designations and locations relevant to the assessment are presented in Table 7.2 overleaf:

9 Environment Agency Horizontal Guidance Note H1, Annex (f) -Air emissions, Version 2.1, May 2010.
10 Council Directive 92/43/EEC on the conservation of natural habitats and of wild fauna and flora
11 Council Directive 79/409/EEC on the conservation of wild birds
12 The Convention of Wetlands of International Importance especially as Waterfowl Habitat (Ramsar, Iran,1971)

7.2: Relevant Designated Habitat Sites within Zone of Influence				
ID	X	Y	Designation	Name
ER1	456435	135418	SAC	River Itchen
ER2	Grid (217 receptor locations)		SSSI	Micheldever Spoil Heaps
ER3	450186.6	144435.2	SINC & AWL	Freefolk Wood
ER4	450943.3	145273.3	SINC & AWL	Laverstoke Wood
ER5	451100	144900	SINC & AWL	Round Wood, Roundwood Estate
ER6	452400	145300	SINC & AWL	Cobley Wood North
ER7	452500	144900	SINC & AWL	Cobley Wood Middle
ER8	452600	144500	SINC & AWL	Cobley Wood South
ER9	453400	144600	SINC & AWL	Oaken Copse
ER10	453500	143900	SINC	Black Wood North
ER11	449933.2	144029.5	SINC & AWL	Norton Wood
ER12	450835.5	142647.7	SINC	Upper Cranbourne/Hunton Down
ER13	450100	143400	SINC & AWL	Cranbourne Wood
ER14	450370	143900	SINC	Field Near Freefolk Wood
ER15	450500	143600	SINC	Freefolk Beech Break
ER16	451940.6	143429	SINC	Micheldever Oil Terminal
ER17	452867.3	143595.9	SINC & AWL	Black Wood, Micheldever
ER18	450806.2	144142.6	AWL	Kitelands Clump
ER19	451787.6	144332.3	AWL	Burntheat Copse
ER20	452473.6	145106.4	AWL	Cobley Wood (Location 1)
ER21	452522.1	144727.1	AWL	Cobley Wood (Location 2)

The findings of the detailed dispersion modelling assessment of combustion emissions from the stacks serving the ACT and AD processes at the proposed development has found that for all pollutants the maximum predicted long-term and short-term impacts on the sensitive ecosystems would be classified as 'insignificant'.

A more detailed assessment of the impacts on the sensitive habitat sites is presented in SOL0613CPP03_MD Volume 2: Annex C1 – Air Quality Impacts).

7.2 Impacts to Land

There are no impacts to land relating to the proposed installation.

7.3 Impacts to Controlled Waters

The site has been designed to harvest all rainwater emissions and to recycle all process effluents within an internal waste water treatment plant.

There is no discharge of process water from the site either to controlled water or public sewer.

There will be no process effluents discharged to controlled waters from the Installation.

There will be no surface water discharges to controlled waters. All surface water runoff will be controlled and managed by infiltration basins, infiltration swales and soakaways/filter drains.

7.4 Impacts to sewer

There are no discharges to sewer arising from the installation.