Medical Device Alert

Ref: MDA/2013/059 Issued: 01 August 2013 at 12:00

Device

Orthopaedic instrument.
Flexible handle (part no. 355.280), used with the Simplified Universal Nail System (SUN) and the Universal Nail System (UNI).

Manufactured by Synthes GmbH.

Problem

Due to the design of the instrument, the device may not be adequately cleaned. This could result in a risk of infection to the patient.

The manufacturer has redesigned the affected part and issued a Field Safety Notice advising on the replacement and return of the affected device.

Action by

- Decontamination units e.g. sterilisation departments
- Medical directors
- Orthopaedic departments
- Orthopaedic surgeons
- Staff involved in the management of patients implanted with nailing systems
- Theatre managers
- Theatre staff

Action

- Identify and quarantine the affected device.
- Contact the manufacturer for a replacement device.
- Until replacement devices are received, use an alternative fixation method for insertion procedures and postpone removal procedures except where there is no alternative.

CAS deadlines

Action underway: 08 August 2013

Action complete: 15 August 2013

Note: These deadlines are for systems to be in place to take actions and not for the completion of the actions.

Contact

Manufacturer
Claudia Allemann
Field Action Manager
Synthes GmbH
Tel: +41 32 720 72 24
Email: allemann.claudia@synthes.com

Device

The flexible handle is used during the insertion of the universal tibial nail, and femoral universal nail and the extraction of all universal nails.

All devices of the old design, where the handles are perpendicular to the threaded section, are affected by this recall - see figures below for a visual comparison of the old and new design.

The affected flexible handle (part no. 355.280) is always attached to the hammer guide (part no. 355.220).

Figure 1: Old design affected by the recall

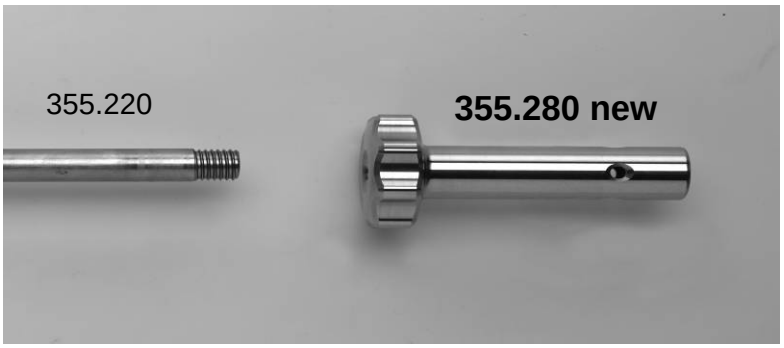

Figure 2: New design NOT affected by the recall

Distribution

This MDA has been sent to:

- Care Quality Commission (CQC) (headquarters) for information
- HSC trusts in Northern Ireland (chief executives)
- Local authorities in Scotland (equipment co-ordinators)
- NHS boards and trusts in Wales (chief executives)
- NHS boards in Scotland (equipment co-ordinators)
- NHS England area teams for information
- NHS trusts in England (chief executives)

Onward distribution

Please bring this notice to the attention of relevant employees in your establishment.
Below is a suggested list of recipients.

Trusts

CAS and SABS (NI) liaison officers for onward distribution to all relevant staff including:

- Infection prevention teams
- Medical directors
- Nursing executive directors
- Orthopaedic surgeons
- Risk managers
- Sterile services departments
- Supplies managers
- Theatre managers
- Theatre nurses
- Theatres

Public Health England

Directors for onward distribution to:

- Consultants in communicable disease control
- Heads of health, safety and quality
- Health protection nurses
- Regional epidemiologists
- Regional microbiologists
- Risk manager
- Safety officers

Independent distribution

Establishments registered with the Care Quality Commission (CQC) (England only)

This alert should be read by:

- Hospitals in the independent sector
- Independent treatment centres
- Private medical practitioners

Please note: CQC and OFSTED do not distribute these alerts. Independent healthcare providers and social care providers can sign up to receive MDAs directly from the Department of Health's Central Alerting System (CAS) by sending an email to: safetyalerts@dh.gsi.gov.uk and requesting this facility.

Contacts

Manufacturer
Synthes GmbH
Luzernstrasse 21
CH-4528 Zuchwil,
Switzerland
Tel: +41 32 720 72 24
Email: allemann.claudia@synthes.com

England

If you are in England, please send enquiries about this notice to the MHRA, quoting reference number **MDA/2013/059** or **2013/004/022/081/002**

Technical aspects
Salma Husain or Michelle Kelly
Medicines & Healthcare Products Regulatory Agency
Floor 4, 151 Buckingham Palace Road, London SW1W 9SZ

Tel: 020 3080 6729 or 7145
Fax: 020 8754 3965

Email: salma.husain@mhra.gsi.gov.uk
michelle.kelly@mhra.gsi.gov.uk

Clinical aspects
For clinical aspects please contact the clinical team on 020 3080 7248 or 020 3080 7032
Medicines & Healthcare Products Regulatory Agency
Floor 4, 151 Buckingham Palace Road, London SW1W 9SZ

Fax: 020 8754 3965

Email: carol.lowry@mhra.gsi.gov.uk
kayleigh.purdon@mhra.gsi.gov.uk

How to report adverse incidents

Please report via our website http://www.mhra.gov.uk

Further information about **CAS** can be found at https://www.cas.dh.gov.uk/Home.aspx

Northern Ireland

Alerts in Northern Ireland will continue to be distributed via the NI SABS system.

Enquiries and adverse incident reports in Northern Ireland should be addressed to:

Northern Ireland Adverse Incident Centre
Health Estates Investment Group
Room 17, Annex 6, Castle Buildings
Stormont Estate, Dundonald BT4 3SQ

Tel: 02890 523 704
Fax: 02890 523 900

Email: NIAIC@dhsspsni.gov.uk

http://www.dhsspsni.gov.uk/index/hea/niaic.htm

How to report adverse incidents in Northern Ireland

Please report directly to NIAIC, further information can be found on our website http://www.dhsspsni.gov.uk/niaic

Further information about **SABS** can be found at http://sabs.dhsspsni.gov.uk/

Scotland

Enquiries and adverse incident reports in Scotland should be addressed to:

Incident Reporting and Investigation Centre
NHS National Services Scotland
Gyle Square, 1 South Gyle Crescent
Edinburgh EH12 9EB

Tel: 0131 275 7575
Fax: 0131 314 0722

Email: nss.iric@nhs.net

http://www.hfs.scot.nhs.uk/online-services/incident-reporting-and-investigation-centre-iric/

Wales

Enquiries in Wales should be addressed to:

Improving Patient Safety Team
Medical Directorate, Welsh Government, Cathays Park
Cardiff CF10 3NQ

Tel: 029 2082 3922

Email: Haz-Aic@wales.gsi.gov.uk

MHRA is an executive agency of the Department of Health
© Crown Copyright 2013

Addressees may take copies for distribution within their own organisations